7–22–96
Vol. 61 No. 141
Pages 37807–38048

federal register

Monday
July 22, 1996

Briefings on How To Use the Federal Register
For information on briefings in Washington, DC, see announcement on the inside cover of this issue.

FEDERAL REGISTER Published daily, Monday through Friday, (not published on Saturdays, Sundays, or on official holidays), by the Office of the Federal Register, National Archives and Records Administration, Washington, DC 20408, under the Federal Register Act (49 Stat. 500, as amended; 44 U.S.C. Ch. 15) and the regulations of the Administrative Committee of the Federal Register (1 CFR Ch. I). Distribution is made only by the Superintendent of Documents, U.S. Government Printing Office, Washington, DC 20402.

The Federal Register provides a uniform system for making available to the public regulations and legal notices issued by Federal agencies. These include Presidential proclamations and Executive Orders and Federal agency documents having general applicability and legal effect, documents required to be published by act of Congress and other Federal agency documents of public interest. Documents are on file for public inspection in the Office of the Federal Register the day before they are published, unless earlier filing is requested by the issuing agency.

The seal of the National Archives and Records Administration authenticates this issue of the Federal Register as the official serial publication established under the Federal Register Act. 44 U.S.C. 1507 provides that the contents of the Federal Register shall be judicially noticed.

The Federal Register is published in paper, 24x microfiche and as an online database through *GPO Access*, a service of the U.S. Government Printing Office. The online edition of the Federal Register on *GPO Access* is issued under the authority of the Administrative Committee of the Federal Register as the official legal equivalent of the paper and microfiche editions. The online database is updated by 6 a.m. each day the Federal Register is published. The database includes both text and graphics from Volume 59, Number 1 (January 2, 1994) forward. Free public access is available on a Wide Area Information Server (WAIS) through the Internet and via asynchronous dial-in. Internet users can access the database by using the World Wide Web; the Superintendent of Documents home page address is http://www.access.gpo.gov/su__docs/, by using local WAIS client software, or by telnet to swais.access.gpo.gov, then login as guest, (no password required). Dial-in users should use communications software and modem to call (202) 512–1661; type swais, then login as guest (no password required). For general information about *GPO Access*, contact the *GPO Access* User Support Team by sending Internet e-mail to gpoaccess@gpo.gov; by faxing to (202) 512–1262; or by calling (202) 512–1530 between 7 a.m. and 5 p.m. Eastern time, Monday–Friday, except for Federal holidays.

The annual subscription price for the Federal Register paper edition is $494, or $544 for a combined Federal Register, Federal Register Index and List of CFR Sections Affected (LSA) subscription; the microfiche edition of the Federal Register including the Federal Register Index and LSA is $433. Six month subscriptions are available for one-half the annual rate. The charge for individual copies in paper form is $8.00 for each issue, or $8.00 for each group of pages as actually bound; or $1.50 for each issue in microfiche form. All prices include regular domestic postage and handling. International customers please add 25% for foreign handling. Remit check or money order, made payable to the Superintendent of Documents, or charge to your GPO Deposit Account, VISA or MasterCard. Mail to: New Orders, Superintendent of Documents, P.O. Box 371954, Pittsburgh, PA 15250–7954.

There are no restrictions on the republication of material appearing in the Federal Register.

How To Cite This Publication: Use the volume number and the page number. Example: 61 FR 12345.

SUBSCRIPTIONS AND COPIES

PUBLIC	
Subscriptions:	
Paper or fiche	202–512–1800
Assistance with public subscriptions	512–1806
General online information	202–512–1530
Single copies/back copies:	
Paper or fiche	512–1800
Assistance with public single copies	512–1803
FEDERAL AGENCIES	
Subscriptions:	
Paper or fiche	523–5243
Assistance with Federal agency subscriptions	523–5243

For other telephone numbers, see the Reader Aids section at the end of this issue.

FEDERAL REGISTER WORKSHOP

THE FEDERAL REGISTER: WHAT IT IS AND HOW TO USE IT

FOR: Any person who uses the Federal Register and Code of Federal Regulations.

WHO: Sponsored by the Office of the Federal Register.

WHAT: Free public briefings (approximately 3 hours) to present:

1. The regulatory process, with a focus on the Federal Register system and the public's role in the development of regulations.
2. The relationship between the Federal Register and Code of Federal Regulations.
3. The important elements of typical Federal Register documents.
4. An introduction to the finding aids of the FR/CFR system.

WHY: To provide the public with access to information necessary to research Federal agency regulations which directly affect them. There will be no discussion of specific agency regulations.

WASHINGTON, DC

WHEN: July 23, 1996 at 9:00 am.

WHERE: Office of the Federal Register Conference Room, 800 North Capitol Street, NW., Washington, DC (3 blocks north of Union Station Metro)

RESERVATIONS: 202–523–4538

Printed on recycled paper containing 100% post consumer waste

Contents

Federal Register
Vol. 61, No. 141
Monday, July 22, 1996

Agricultural Marketing Service
RULES
Nectarines and peaches grown in California, 37812–37813
Oranges and grapefruit grown in Texas, 37810–37812

Agricultural Research Service
NOTICES
Strategic plan (FY 1998-2002); draft availability, 37980–37992

Agriculture Department
See Agricultural Marketing Service
See Agricultural Research Service
See Forest Service
See Grain Inspection, Packers and Stockyards Administration
See Rural Utilities Service

Air Force Department
NOTICES
Agency information collection activities:
Proposed collection; comment request, 37883–37884

Architectural and Transportation Barriers Compliance Board
PROPOSED RULES
Americans with Disabilities Act; implementation:
Accessibility guidelines—
Buildings and facilities; children's facilities, 37964–37977

Armed Forces Retirement Home
NOTICES
Privacy Act:
Computer matching programs, 37881–37882

Army Department
PROPOSED RULES
Environmental analysis of army actions, 37865–37875

Assassination Records Review Board
NOTICES
Meetings; Sunshine Act, 37882

Centers for Disease Control and Prevention
NOTICES
Meetings:
Disease, Disability, and Injury Prevention and Control special emphasis panel, 37904

Children and Families Administration
NOTICES
Agency information collection activities:
Proposed collection; comment request, 37904–37905

Commerce Department
See International Trade Administration
See National Oceanic and Atmospheric Administration

Committee for the Implementation of Textile Agreements
NOTICES
Cotton, wool, and man-made textiles:
United Arab Emirates, 37952–37953

Commodity Futures Trading Commission
NOTICES
Contract market proposals:
Coffee, Sugar & Cocoa Exchange—
Butter, 37883

Customs Service
RULES
Uruguay Round Agreements Act (URAA):
Textiles and textile products; country of origin determination, 37817–37818

Defense Department
See Air Force Department
See Army Department
RULES
Acquisition regulations:
Petroleum products, 37841–37842
PROPOSED RULES
Acquisition regulations:
Small Business Administration; certificates of competency processing, 37878–37879

Energy Department
See Energy Efficiency and Renewable Energy Office
See Federal Energy Regulatory Commission

Energy Efficiency and Renewable Energy Office
NOTICES
Meetings:
Demonstration and Commercial Application of Renewable Energy and Energy Efficiency Technologies Advisory Committee, 37884

Environmental Protection Agency
RULES
Air quality implementation plans; approval and promulgation; various States:
Louisiana, 37833–37840
PROPOSED RULES
Air quality implementation plans; approval and promulgation; various States:
Louisiana, 37875
Superfund program:
National oil and hazardous substances contingency plan—
National priorities list update, 37875–37878
NOTICES
Pesticide programs:
Agricultural worker protection standards program; public meetings, 37890–37891
Federal Insecticide, Fungicide, and Rodenticide Act and Federal Food, Drug, and Cosmetic Act; plant-pesticides policy, 37891–37893
Superfund; response and remedial actions, proposed settlements, etc.:
Union Steel Products, Inc. Site, MI, 37893–37894
Water pollution control:
National pollutant discharge elimination system; State programs—
Texas et al., 37894–37896

Federal Aviation Administration
RULES
Airworthiness directives:
Pratt & Whitney, 37814–37817
Organization, functions, and authority delegations:
Commercial Space Transportation; CFR chapter III name change, 37814
PROPOSED RULES
Airworthiness standards:
Special conditions—
de Havilland DHC-8-400 airplane, 37844–37845
NOTICES
Advisory circulars; availability, etc.:
Air transportation partnership for safety programs, 37953–37958
Airport noise compatibility program:
Laughlin/Bullhead International Airport, AZ, 37958–37959
Meetings:
Informal airspace meetings—
California, 37959

Federal Communications Commission
RULES
Radio stations; table of assignments:
Florida, 37840–37841
Texas, 37840
Wyoming, 37840
NOTICES
Agency information collection activities:
Proposed collection; comment request, 37896
Submission for OMB review; comment request, 37896–37899
Reports and recordkeeping requirements, 37899–37901

Federal Energy Regulatory Commission
NOTICES
Electric rate and corporate regulation filings:
Potomac Electric Power Co. et al., 37885–37886
Public Service Co. of New Mexico et al., 37886–37890
Hydroelectric applications, 37890
Applications, hearings, determinations, etc.:
Williams Natural Gas Co., 37884–37885

Federal Railroad Administration
RULES
Railroad accident reporting
Meeting, 37842

Federal Reserve System
NOTICES
Banks and bank holding companies:
Formations, acquisitions, and mergers, 37901

Fish and Wildlife Service
PROPOSED RULES
Migratory bird hunting:
Early-season regulations (1996-1997); proposed frameworks, 37994–38011
NOTICES
Endangered and threatened species permit applications, 37921
Environmental statements; availability, etc.:
Incidental take permits—
King County et al., WA, 37922

Food and Drug Administration
RULES
Labeling of drug products (OTC):
Sodium content (OTC); labeling provisions, 38046
PROPOSED RULES
Labeling of drug products (OTC):
Orally ingested drug products containing calcium, magnesium, and potassium (OTC), 38047
NOTICES
Food additive petitions:
Life Technologies, Inc., 37905–37906

Forest Service
NOTICES
Environmental statements; availability, etc.:
Tongass National Forest, AK, 37880–37881

Grain Inspection, Packers and Stockyards Administration
NOTICES
Livestock care and handling guidelines; comment request, 37881

Health and Human Services Department
See Centers for Disease Control and Prevention
See Children and Families Administration
See Food and Drug Administration
See Health Resources and Services Administration
NOTICES
Agency information collection activities:
Proposed collection; comment request, 37901–37902
Organization, functions, and authority delegations:
Information Resources Management Office, 37902–37904

Health Resources and Services Administration
NOTICES
Grants and cooperative agreements; availability, etc.:
Community and migrant health centers, 37906–37917
Homeless individuals and children—
Health care, primary care and substance abuse services, 37917–37921

Housing and Urban Development Department
RULES
Public and Indian housing:
Public housing development program; Federal regulatory review, 38014–38022
NOTICES
Grants and cooperative agreements; availability, etc.:
Public and Indian housing—
Public housing demolition, site revitalization, and replacement housing grants (HOPE VI), 38024–38039

Interior Department
See Fish and Wildlife Service
See Land Management Bureau
See Minerals Management Service
See National Park Service
See Reclamation Bureau
PROPOSED RULES
Watches duty exemption program:
Duty-exemption entitlement allocations in Virgin Islands, Guam, American Samoa, and Northern Mariana Islands, 37845–37848
NOTICES
Meetings:
Exxon Valdez Oil Spill Public Advisory Group, 37921

International Trade Administration
PROPOSED RULES
Watches duty exemption program:
Duty-exemption entitlement allocations in Virgin Islands, Guam, American Samoa, and Northern Mariana Islands, 37845–37848
NOTICES
North American Free Trade Agreement (NAFTA); binational panel reviews:
Color picture tubes from—
Canada, 37882

International Trade Commission
RULES
Practice and procedure:
Uruguay Round Agreements Act (URAA):
Antidumping and countervailing duties investigations and reviews; conformance, 37818–37833

Justice Department
See Prisons Bureau
PROPOSED RULES
Americans with Disabilities Act:
Nondiscrimination on basis of disability—
State and local government services; childrens' facilities in public accommodations and commercial facilities, 37964–37977

Labor Department
See Occupational Safety and Health Administration
See Pension and Welfare Benefits Administration

Land Management Bureau
NOTICES
Resource management plans, etc.:
Glenwood Springs Resource Area, CO, 37922
Survey plat filings:
Utah, 37922–37923

Minerals Management Service
PROPOSED RULES
Royalty management:
Federal leases; natural gas valuation regulations; amendments, 37865

National Aeronautics and Space Administration
NOTICES
Patent licenses; non-exclusive, exclusive, or partially exclusive:
SafetySCAN, LLC, 37937
Vanguard Space Corp., 37937

National Oceanic and Atmospheric Administration
RULES
Fishery conservation and management:
Alaska; fisheries of exclusive economic zone; Federal regulatory reform
Correction, 37843
Atlantic swordfish fishery; drift gillnet closure, 37842–37843
West Coast States and Western Pacific; exclusive economic zone; Federal regulatory reform
Correction, 37843
NOTICES
Permits:
Marine mammals, 37882–37883

National Park Service
NOTICES
Concession contract negotiations:
Lake Mead National Recreation Area, marina operation, 37923
Meetings:
Subsistence Resource Commission, 37923

Nuclear Regulatory Commission
NOTICES
Environmental statements; availability, etc.:
Duke Power Co., 37941–37942
Applications, hearings, determinations, etc.:
Chem-Nuclear Systems, Inc., 37937–37938
Jenson, Mark A., 37938–37940
Osorio, Jesus N., 37940–37941

Occupational Safety and Health Administration
PROPOSED RULES
Construction and general industry safety and health standards:
Federal regulatory reform, 37849–37865

Pension and Welfare Benefits Administration
NOTICES
Employee benefit plans; prohibited transaction exemptions:
Mewbourne Oil Co., Inc., 37924–37933
Wells Fargo Bank et al., 37933–37937

Personnel Management Office
RULES
Health benefits, Federal employees:
Leave without pay or insufficient pay; payment of premiums, 37807–37810
NOTICES
Senior Executive Service:
Performance Review Board; membership, 37942

Presidential Advisory Committee on Gulf War Veterans' Illnesses
NOTICES
Meetings, 37942–37943

Prisons Bureau
RULES
Inmate control, custody, care, etc.:
Hostage situation management, 38042
Release preparation program, 38042–38043

Public Health Service
See Centers for Disease Control and Prevention
See Food and Drug Administration
See Health Resources and Services Administration

Reclamation Bureau
NOTICES
Environmental statements; availability, etc.:
Elephant Butte and Caballo Reservoirs, NM, 37923–37924
Meetings:
Yakima River Basin Water Enhancement Project Conservation Advisory Group, 37924

Rural Utilities Service
RULES
Rural development:
Distance learning and telemedicine grant program
Correction, 37813–37814, 37961

NOTICES
Grants and cooperative agreements; availability, etc.:
Distance learning and telemedicine program; correction, 37881

Securities and Exchange Commission
NOTICES
Agency information collection activities:
Proposed collection; comment request, 37943–37945
Self-regulatory organizations; proposed rule changes:
Depository Trust Co., 37948–37950
National Association of Securities Dealers, Inc., 37950–37951
Applications, hearings, determinations, etc.:
Aetna Series Fund, Inc. et al., 37945–37946
Pacific Horizons Funds, Inc. et al., 37946–37948

Small Business Administration
NOTICES
Grant and cooperative agreement awards:
Small business development centers, 37951–37952
Meetings:
Clarksburg District Advisory Council, 37952

Surface Transportation Board
NOTICES
Railroad operation, acquisition, construction, etc.:
Varlen Corp., 37960

Textile Agreements Implementation Committee
See Committee for the Implementation of Textile Agreements

Transportation Department
See Federal Aviation Administration
See Federal Railroad Administration
See Surface Transportation Board
NOTICES
Aviation proceedings:
Hearings, etc.—
United Parcel Service Co., 37953

Treasury Department
See Customs Service
NOTICES
Agency information collection activities:
Submission for OMB review; comment request, 37960

Separate Parts In This Issue

Part II
Department of Justice and Architectural and Transportation Barriers Compliance Board, 37964–37977

Part III
Department of Agriculture, Agricultural Research Service, 37980–37992

Part IV
Department of the Interior, Fish and Wildlife Service, 37994–38011

Part V
Housing and Urban Development Department, 38014–38022

Part VI
Housing and Urban Development Department, 38024–38039

Part VII
Department of Justice, Prisons Bureau, 38042–38043

Part VIII
Health and Human Services Department, Food and Drug Administration, 38046–38047

Reader Aids
Additional information, including a list of public laws, telephone numbers, reminders, and finding aids, appears in the Reader Aids section at the end of this issue.

Electronic Bulletin Board
Free Electronic Bulletin Board service for Public Law numbers, Federal Register finding aids, and a list of documents on public inspection is available on 202–275–1538 or 275–0920.

CFR PARTS AFFECTED IN THIS ISSUE

A cumulative list of the parts affected this month can be found in the Reader Aids section at the end of this issue.

5 CFR
890 37807

7 CFR
906 37810
916 37812
917 37812
1703 (2 documents) 37813, 37961

14 CFR
39 37814
Ch. III 37814

Proposed Rules:
25 37844

15 CFR

Proposed Rules:
303 37845

19 CFR
102 37817
201 37818
207 37818

21 CFR
201 38046
331 38046

Proposed Rules:
201 38047
331 38047

24 CFR
941 38014

28 CFR
552 38042
571 38042

Proposed Rules:
38 2 documents 37964, 37976

29 CFR

Proposed Rules:
1910 37849
1926 37849

30 CFR

Proposed Rules:
206 37865

32 CFR

Proposed Rules:
651 37865

36 CFR

Proposed Rules:
1191 37964

40 CFR
52 37833
81 37833

Proposed Rules:
52 37875
81 37875
300 (2 documents) 37875 37877

47 CFR
73 (3 documents) 37840

48 CFR
225 37841
252 37841

Proposed Rules:
219 37878
252 37878

49 CFR
225 37842

50 CFR
630 37842
660 37843
679 37843

Proposed Rules:
20 37994

Rules and Regulations

Federal Register
Vol. 61, No. 141
Monday, July 22, 1996

This section of the FEDERAL REGISTER contains regulatory documents having general applicability and legal effect, most of which are keyed to and codified in the Code of Federal Regulations, which is published under 50 titles pursuant to 44 U.S.C. 1510.

The Code of Federal Regulations is sold by the Superintendent of Documents. Prices of new books are listed in the first FEDERAL REGISTER issue of each week.

OFFICE OF PERSONNEL MANAGEMENT

5 CFR Part 890

RIN 3206–AG66

Federal Employees Health Benefits Program: Payment of Premiums for Periods of Leave Without Pay or Insufficient Pay

AGENCY: Office of Personnel Management.

ACTION: Interim rule with request for comments.

SUMMARY: The Office of Personnel Management is issuing an interim regulation to require Federal agencies to provide employees entering leave without pay (LWOP) status, or whose pay is insufficient to cover their FEHB premium payments, written notice of their opportunity to continue their FEHB coverage. Employees who want to continue their enrollment must sign a form agreeing to pay their premiums directly to their agency on a current basis, or to incur a debt to be withheld from their future salary. The purpose of this interim regulation is to ensure that employees who are entering LWOP status, or whose pay is insufficient to pay their FEHB premiums, are fully informed when they decide whether or not to continue their FEHB coverage.

DATES: This interim regulation is effective August 21, 1996. We must receive comments on or before September 20, 1996.

ADDRESSES: Send written comments to Lucretia F. Myers, Assistant Director for Insurance Programs, Retirement and Insurance Service, Office of Personnel Management, P.O. Box 57, Washington, DC 20044; or deliver to OPM, Room 3451, 1900 E Street NW., Washington, DC; or FAX to (202) 606–0633.

FOR FURTHER INFORMATION CONTACT: Robert G. Iadicicco, (202) 606–0004.

SUPPLEMENTARY INFORMATION: On May 10, 1994, OPM issued a regulation in the Federal Register [59 FR 24062] that proposed a number of changes to the Federal Employees Health Benefits (FEHB) Program that would result in better service to enrollees. One of the changes proposed establishing a requirement that agencies inform employees entering leave without pay status (LWOP), (or any other type of nonpay status, except periods of nonpay resulting from a lapse of appropriations), or receiving pay insufficient to cover their FEHB premium payments, of the options of continuing or terminating their FEHB coverage, and if continuing, of paying premiums directly on a current basis or incurring a debt to be withheld from future salary. The proposal intended to ensure employees are fully aware of these alternatives. Furthermore, because the proposal would establish a procedure under which the employee voluntarily arranges to have the debt recovered from salary in a specified amount after returning to duty or after salary increases to cover the amount of the health benefits contributions, the involuntary offset provisions of 5 U.S.C. 5514 and subpart K of 5 CFR part 550 would not apply.

On November 23, 1994, OPM issued a regulation in the Federal Register (59 FR 60294) that put into effect all of the changes proposed in the May 10, 1994, regulation except the requirement that agencies inform employees entering LWOP status, or receiving pay insufficient to cover their FEHB premium payments, of the options of continuing or terminating their FEHB coverage. This interim regulation covers the requirement.

We received comments from two Federal agencies and one retiree organization. One commenter agreed that employees need to be advised of the options they have to continue FEHB coverage while they are in LWOP status or when their pay is insufficient, but had a concern. Their concern was that the proposal did not clearly state what would happen to the FEHB enrollment of employees who go on LWOP status or whose pay is insufficient if they did not elect in writing to continue or terminate their FEHB enrollment.

We have addressed this concern by amending the proposal to require employing offices to provide employees with a written notice of the options of continuing or terminating their FEHB coverage. The enrollments of employees who do not return a signed form to their employing office within 31 days after the day they receive the notice are terminated. The termination is retroactive to the end of the last pay period in which the premium was withheld from pay.

The employees and covered family members, if any, are entitled to the 31-day temporary extension of coverage and may convert to an individual contract for health benefits. In addition, employees who are prevented by circumstances beyond their control from timely returning a signed form to the employing office may request the employing office to reinstate their coverage. Therefore, employees who through no fault of their own are not able to return a signed form to the employing office within 31 days are protected by the temporary extension of coverage and their right to request reinstatement of their coverage. Employees who terminate their enrollment may enroll upon their return to pay status.

One commenter agreed that the change should resolve some of the past problems and clarify agency and employee responsibilities, but that continued monitoring by OPM and agency staff of operating personnel offices' administration of the FEHB enrollment procedures for employees in LWOP status will be required. We agree continued monitoring is still required, and note that it is the responsibility of agencies' staff to monitor their employing offices' procedures for employees who enter LWOP status to ensure employees receive the information required by this regulation.

One commenter disagreed with OPM's statement that the involuntary offset provisions of 5 U.S.C. 5514 and subpart K of 5 CFR part 550 would not apply under this regulation. The involuntary offset provisions require agencies to follow due process procedures such as giving employees written notice and an opportunity for a hearing before collecting debts from their pay. Section 550.1102(b) of subpart K of 5 CFR part 550 states, ''This subpart and 5 U.S.C. 5514 apply in recovering certain debts by administrative offset, *except where the employee consents to the recovery*, from

the current pay account of an employee.'' (emphasis added). Because this regulation requires employees entering LWOP status or receiving pay insufficient to cover their FEHB premiums to consent in writing to the recovery of the debt they are incurring by continuing their FEHB coverage, the involuntary offset provisions of 5 U.S.C. 5514 and subpart K of 5 CFR part 550 do not apply.

On December 30, 1994, and June 1, 1995, OPM issued interim and final regulations in the Federal Register (59 FR 67605 and 60 FR 28511), respectively, that eliminated the requirement for the use of certified mail, return receipt requested, when notifying certain enrollees that their enrollment in the FEHB Program will be terminated due to nonpayment of premiums unless the payment is received within 15 days. This interim regulation further amends 5 CFR 890.502 to eliminate the requirement for the use of certified mail, return receipt requested, for the following circumstances: (1) Annuitants whose FEHB premiums exceed the amount of their annuities; (2) surviving spouses in receipt of a lump-sum basic employee death benefit under the Federal Employees Retirement System; and (3) employees in LWOP status in excess of 365 days.

On June 17, 1994, and December 27, 1994, OPM issued proposed and final regulations in the Federal Register (59 FR 31171 and 59 FR 66434) that delegated from OPM to Federal agencies the authority to reconsider disputes over coverage and enrollment issues in the Federal Employees' Group Life Insurance and the FEHB Programs and to make retroactive as well as prospective corrections of errors. This interim regulation amends 5 CFR 890.502, 890.808, and 890.1109 to conform with the delegation of authority to Federal agencies.

Regulatory Flexibility Act

I certify that this regulation will not have a significant economic impact on a substantial number of small entities because it primarily affects Federal employees, annuitants, and former spouses.

List of Subjects in 5 CFR Part 890

Administrative practice and procedure, Government employees, Health facilities, Health insurance, Health professions, Hostages, Iraq, Kuwait, Lebanon, Reporting and recordkeeping requirements, Retirement.

U.S. Office of Personnel Management.

James B. King,

Director.

Accordingly, OPM is amending 5 CFR part 890 as follows:

PART 890—FEDERAL EMPLOYEES HEALTH BENEFITS PROGRAM

1. The authority citation for part 890 continues to read as follows:

Authority: 5 U.S.C. 8913; § 890.803 also issued under 50 U.S.C. 403p, 22 U.S.C. 4069c and 4069c–1; subpart L also issued under sec. 599C of Pub. L. 101–513, 104 Stat. 2064, as amended.

§ 890.301 [Amended]

2. In § 890.301, paragraph (c) is amended by removing ''§ 890.304(a)(5)'' and adding in its place ''§ 890.304(a)(1)(v)''.

3. In § 890.502, paragraphs (a), (b), (c), (d), and (e) are revised; paragraphs (f) and (h) are removed, and paragraph (g) is redesignated as paragraph (f), to read as follows:

§ 890.502 Employee and annuitant withholdings and contributions and direct payment of premiums.

(a) *Employee and annuitant withholdings and contributions.* (1) Except as provided in paragraphs (a)(2) and (g) of this section, an employee or annuitant is responsible for payment of the employee or annuitant share of the cost of enrollment for every pay period during which the enrollment continues. An employee or annuitant incurs an indebtedness due the United States in the amount of the proper employee or annuitant withholding required for each pay period that health benefits withholdings or direct premium payments are not made but during which the enrollment continues.

(2) An individual is not required to pay withholdings for the period between the end of the pay period in which he or she separates from service and the commencing date of an immediate annuity, if later.

(3) Temporary employees who are eligible to enroll under 5 U.S.C. 8906a must pay the full subscription charges including both the employee share and the Government contribution. Employees with provisional appointments under § 316.403 are not considered eligible for coverage under 5 U.S.C. 8906a for the purpose of this paragraph (a)(3).

(4) The employing office must determine the withholding for employees whose annual pay is paid during a period shorter than 52 workweeks on an annual basis and prorate the withholding over the number of installments of pay regularly paid during the year.

(5) The employing office must make the withholding required from enrolled survivor annuitants in the following order. First, withhold from the annuity of a surviving spouse, if any. If that annuity is less than the withholding required, the employing office must make the withholding to the extent necessary from the annuity of the children, if any, in the following order. First, withhold from the annuity of the youngest child, and if necessary, then from the annuity of the next older child, in succession, until the withholding is satisfied.

(6) Surviving spouses in receipt of a basic employee death benefit under 5 U.S.C. 8442(b)(1)(A) and annuitants whose health benefits premiums exceed the amount of their annuities may pay their portion of the health benefits premium directly to the retirement system acting as their employing office in accordance with procedures set out in paragraph (d) of this section.

(b) *Procedures when employee enters LWOP status or pay is insufficient to cover premium.* As soon as the employing office is aware of an employee whose premium payments cannot be made because the employee will be entering or has entered leave without pay status, (or any other type of nonpay status, except periods of nonpay resulting from a lapse of appropriations), or the employee's pay is insufficient to cover the premiums, the employing office must inform the employee of the available health benefits options.

(1) The employing office must provide the employee written notice of the options and consequences as described in paragraphs (b)(2) (i) and (ii) of this section. If the employing office cannot give the notice required by this paragraph (b)(1) to the employee directly, it must send the notice by first class mail. A notice that is mailed is deemed to be received 5 days after the date of the notice.

(2) The employee must elect in writing either to continue health benefits coverage or terminate it. The employee may continue his or her health benefits coverage by choosing one of the options listed in this paragraph (b)(2) and returning the signed form to the employing office within 31 days from the day he or she receives the notice (45 days for an employee residing overseas). When an employee mails the signed form, the date of the postmark is deemed to be the date the notice is returned to the employing office. If an employee elects

to continue coverage, he or she must elect in writing either to—

(i) Agree to pay the premium directly to the agency on a current basis. The employee must agree that if he or she does not pay the premiums, upon returning to employment or upon pay becoming sufficient to cover the premiums, the employing office will deduct, in addition to the current pay period's premiums, an amount equal to the premiums for a pay period during which the employee was in LWOP status. The employing office will continue using this method to deduct the accrued unpaid premiums from salary until the debt is recovered in full. The employee must also agree that if he or she does not return to work or the employing office cannot recover the debt in full from salary, the employing office may recover the debt from whatever other sources it normally has available for recovery of a debt to the United States, or

(ii) Agree upon returning to employment or upon pay becoming sufficient to cover the premiums, the employing office will deduct, in addition to the current pay period's premiums, an amount equal to the premiums for a pay period during which the employee was in LWOP status. The employing office will continue using this method to deduct the accrued unpaid premiums from salary until the debt is recovered in full. The employee must also agree that if he or she does not return to work or the employing office cannot recover the debt in full from salary, the employing office may recover the debt from whatever other sources it normally has available for recovery of a debt to the United States.

(3) Except as provided under paragraph (b)(4) of this section, if the employee does not return the signed form within 31 days after the day he or she receives the notice (45 days for employees residing overseas) the employing office terminates the enrollment according to paragraph (b)(5) of this section. The employing office must give the employee written notification of the termination.

(4) If the employee is prevented by circumstances beyond his or her control from returning a signed form to the employing office within the time frame under paragraph (b)(2) of this section, he or she may request reinstatement of coverage by writing to the employing office. The employee must describe the circumstances that prevented timely notice and file the request within 30 calendar days from the date the employing office gives the employee notification of the termination. The employing office determines if the employee is eligible for reinstatement of coverage. If the determination is affirmative, the employing office reinstates the coverage of the employee retroactive to the date of termination. If the determination is negative, the employee may request a review of the decision from the employing agency as provided under § 890.104.

(5) Terminations of enrollment under paragraphs (b)(2) and (3) of this section are retroactive to the end of the last pay period in which the premium was withheld from pay. The employee and covered family members, if any, are entitled to the temporary extension of coverage for conversion and may convert to an individual contract for health benefits. An employee whose coverage is terminated may enroll upon his or her return to duty in a pay status in a position in which the employee is eligible for coverage under this part.

(c) *Procedures when an agency underwithholds.* (1) An agency that withholds less than the proper health benefits contributions from an individual's pay, annuity, or compensation must submit an amount equal to the sum of the uncollected contributions and any applicable agency contributions required under section 8906 of title 5, United States Code, to OPM for deposit in the Employees Health Benefits Fund.

(2) The agency must make the deposit to OPM described in paragraph (c)(1) of this section as soon as possible, but no later than 60 calendar days after the date the employing office determines the amount of the underdeduction that has occurred, regardless of whether or when the agency recovers the underdeduction. A subsequent agency determination whether to waive collection of the overpayment of pay caused by failure to properly withhold employee health benefits contributions shall be made in accordance with 5 U.S.C. 5584 as implemented by 4 CFR chapter I, subchapter G, unless the agency involved is excluded from application of 5 U.S.C. 5584, in which case any applicable authority to waive the collection may be used.

(d) *Direct premium payments for annuitants.* (1) If an annuity, excluding an annuity under Subchapter III of Chapter 84 (Thrift Savings Plan), is too low to cover the health benefits premium due or if a surviving spouse receives a basic employee death benefit, the retirement system must provide information to the annuitant or surviving spouse regarding the available plans and notify him or her in writing of the opportunity to either: enroll in any plan in which the enrollee's share of the premium is not in excess of the annuity; or make payment of the premium directly to the retirement system.

(2) The retirement system must establish a method for accepting direct payment for health benefits premiums from surviving spouses who have received or are currently receiving basic employee death benefits as well as from annuitants whose annuities are too low to cover their health premiums. The annuitant or surviving spouse must continue to make direct payment of the health benefits premium even if the annuity increases to the extent that it covers the premium.

(3) The annuitant or surviving spouse must pay to the retirement system his or her share of the premium for the enrollment for every pay period during which the enrollment continues, exclusive of the 31-day temporary extension of coverage for conversion provided in § 890.401. The annuitant or surviving spouse must pay after each pay period in which he or she is covered in accordance with a schedule established by the retirement system. If the retirement system does not receive payment by the date due, the retirement system must notify the annuitant or surviving spouse in writing that continuation of coverage depends upon payment being made within 15 days (45 days for annuitants or surviving spouses residing overseas) after receipt of the notice. If no subsequent payments are made, the retirement system terminates the enrollment 60 days (90 days for annuitants or surviving spouses residing overseas) after the date of the notice. An annuitant or surviving spouse whose enrollment terminates because of nonpayment of premium may not reenroll or reinstate coverage, except as provided in paragraph (d)(4) of this section.

(4) If the annuitant or surviving spouse is prevented by circumstances beyond his or her control from paying within 15 days after receipt of the notice, he or she may request reinstatement of coverage by writing to the retirement system. The annuitant or surviving spouse must describe the circumstances that prevented timely notice and file the request within 30 calendar days from the date of termination. The retirement system determines whether the surviving spouse or annuitant is eligible for reinstatement of coverage. If the determination is affirmative, the retirement system reinstates the coverage of the surviving spouse or annuitant retroactive to the date of termination. If the determination is negative, the surviving spouse or

annuitant may request a review of the decision from the retirement system as provided under § 890.104.

(5) Termination of enrollment for failure to pay premiums within the time frame established in accordance with paragraph (d)(3) of this section is retroactive to the end of the last pay period for which payment has been timely received.

(6) The retirement system will submit all direct premium payments along with its regular health benefits premiums to OPM in accordance with procedures established by that office.

(e) *Direct payment of premiums during periods of LWOP status in excess of 365 days.* (1) An employee who is granted leave without pay under subpart L of part 630 of this chapter which exceeds the 365 days of continued coverage under § 890.303(e) must pay the employee contributions directly to the employing office on a current basis.

(2) Payment must be made after the pay period in which the employee is covered in accordance with a schedule established by the employing office. If the employing office does not receive the payment by the date due, the employing office must notify the employee in writing that continuation of coverage depends upon payment being made within 15 days (45 days for employees residing overseas) after receipt of the notice. If no subsequent payments are made, the employing office terminates the enrollment 60 days (90 days for enrollees residing overseas) after the date of the notice.

(3) If the employee was prevented by circumstances beyond his or her control from making payment within the time frame specified in paragraph (e)(2) of this section, he or she may request reinstatement of the coverage by writing to the employing office. The employee must describe the circumstances that prevented timely notice and file the request within 30 calendar days from the date of termination.

(4) The employing office determines whether the employee is eligible for reinstatement of coverage. If the determination is affirmative, the employing office reinstates the coverage of the employee retroactive to the date of termination. If the determination is negative, the employee may request a review of the decision from the employing agency as provided under § 890.104.

(5) An employee whose coverage is terminated under paragraph (e)(2) of this section may enroll upon his or her return to duty in a pay status in a position in which the employee is eligible for coverage under this part.

* * * * *

4. In § 890.808, the last sentence of paragraph (d)(2) is revised to read as follows:

§ 890.808 Employing office responsibilities.

* * * * *

(d) * * *

(2) * * * If the determination is negative, the individual may request a review of the decision from the employing agency as provided under § 890.104.

* * * * *

5. In § 890.1109, the last sentence of paragraph (d)(2) is revised to read as follows:

§ 890.1109 Premium payments

* * * * *

(d) * * *

(2) * * * If the determination is negative, the individual may request a review of the decision from the employing agency as provided under § 890.104.

[FR Doc. 96–18515 Filed 7–19–96; 8:45 am]

BILLING CODE 6325–01–P

DEPARTMENT OF AGRICULTURE

Agricultural Marketing Service

7 CFR Part 906

[Docket No. FV96–906–1 IFR]

Oranges and Grapefruit Grown in the Lower Rio Grande Valley in Texas; Assessment Rate

AGENCY: Agricultural Marketing Service, USDA.

ACTION: Interim final rule with request for comments.

SUMMARY: This interim final rule establishes an assessment rate for the Texas Valley Citrus Committee (Committee) under Marketing Order No. 906 for the 1996–97 and subsequent fiscal period. The Committee is responsible for local administration of the marketing order which regulates the handling of oranges and grapefruit grown in the Lower Rio Grande Valley in Texas. Authorization to assess orange and grapefruit handlers enables the Committee to incur expenses that are reasonable and necessary to administer the program.

DATES: Effective on August 1, 1996. Comments received by August 21, 1996, will be considered prior to issuance of a final rule.

ADDRESSES: Interested persons are invited to submit written comments concerning this rule. Comments must be sent in triplicate to the Docket Clerk, Fruit and Vegetable Division, AMS, USDA, P.O. Box 96456, room 2523–S, Washington, DC 20090–6456, FAX (202) 720–5698. Comments should reference the docket number and the date and page number of this issue of the Federal Register and will be available for public inspection in the Office of the Docket Clerk during regular business hours.

FOR FURTHER INFORMATION CONTACT: Belinda G. Garza, McAllen Marketing Field Office, Fruit and Vegetable Division, AMS, USDA, 1313 E. Hackberry, McAllen, TX 78501, telephone (210) 682–2833, FAX (210) 682–5942, or Charles L. Rush, Marketing Order Administration Branch, Fruit and Vegetable Division, AMS, USDA, P.O. Box 96456, room 2523–S, Washington, DC 20090–6456, telephone (202) 690–3670, FAX (202) 720–5698. Small businesses may request information on compliance with this regulation by contacting: Jay Guerber, Marketing Order Administration Branch, Fruit and Vegetable Division, AMS, USDA, P.O. Box 96456, Room 2523–S, Washington, D.C. 20090–6456; telephone: (202) 720–2491, Fax# (202) 720–5698.

SUPPLEMENTARY INFORMATION: This rule is issued under Marketing Agreement and Order No. 906 (7 CFR part 906), regulating the handling of oranges and grapefruit grown in the Lower Rio Grande Valley in Texas, hereinafter referred to as the ''order.'' The marketing agreement and order are effective under the Agricultural Marketing Agreement Act of 1937, as amended (7 U.S.C. 601–674), hereinafter referred to as the ''Act.''

The Department of Agriculture (Department) is issuing this rule in conformance with Executive Order 12866.

This rule has been reviewed under Executive Order 12778, Civil Justice Reform. Under the marketing order now in effect, handlers in the Lower Rio Grande Valley in Texas are subject to assessments. Funds to administer the order are derived from such assessments. It is intended that the assessment rate as issued herein will be applicable to all assessable oranges and grapefruit beginning August 1, 1996, and continuing until amended, suspended, or terminated. This rule will not preempt any State or local laws, regulations, or policies, unless they present an irreconcilable conflict with this rule.

The Act provides that administrative proceedings must be exhausted before parties may file suit in court. Under section 608c(15)(A) of the Act, any handler subject to an order may file

with the Secretary a petition stating that the order, any provision of the order, or any obligation imposed in connection with the order is not in accordance with law and request a modification of the order or to be exempted therefrom. Such handler is afforded the opportunity for a hearing on the petition. After the hearing the Secretary would rule on the petition. The Act provides that the district court of the United States in any district in which the handler is an inhabitant, or has his or her principal place of business, has jurisdiction to review the Secretary's ruling on the petition, provided an action is filed not later than 20 days after the date of the entry of the ruling.

Pursuant to requirements set forth in the Regulatory Flexibility Act (RFA), the Agricultural Marketing Service (AMS) has considered the economic impact of this rule on small entities.

The purpose of the RFA is to fit regulatory actions to the scale of business subject to such actions in order that small businesses will not be unduly or disproportionately burdened. Marketing orders issued pursuant to the Act, and the rules issued thereunder, are unique in that they are brought about through group action of essentially small entities acting on their own behalf. Thus, both statutes have small entity orientation and compatibility.

There are approximately 2,000 producers of oranges and grapefruit in the production area and 19 handlers subject to regulation under the marketing order. Small agricultural producers have been defined by the Small Business Administration (13 CFR 121.601) as those having annual receipts of less than $500,000, and small agricultural service firms are defined as those whose annual receipts are less than $5,000,000. The majority of orange and grapefruit producers and handlers may be classified as small entities.

The Texas orange and grapefruit marketing order provides authority for the Committee, with the approval of the Department, to formulate an annual budget of expenses and collect assessments from handlers to administer the program. The members of the Committee are producers and handlers of Texas oranges and grapefruit. They are familiar with the Committee's needs and with the costs for goods and services in their local area and are thus in a position to formulate an appropriate budget and assessment rate. The assessment rate is formulated and discussed in a public meeting. Thus, all directly affected persons have an opportunity to participate and provide input.

The Committee met on May 29, 1996, and recommended 1996–97 expenditures of $1,085,130 and an assessment rate of $0.125 per 7/10 bushel carton of oranges and grapefruit. In comparison, last year's budgeted expenditures were $1,008,643. The assessment rate of $0.125 is $0.025 higher than last year's established rate. Major expenditures recommended by the Committee for the 1996–97 fiscal year include $712,800 for advertising, and $174,000 for the Mexican Fruit Fly support program. Budgeted expenses for these items in 1995–96 were $500,000 for advertising, and $174,000 for Mexican Fruit Fly support program.

The assessment rate recommended by the Committee was derived by dividing anticipated expenses by expected shipments of Texas oranges and grapefruit. Texas orange and grapefruit shipments for the year are estimated at 8 million cartons which should provide $1,000,000 in assessment income. Income derived from handler assessments, along with interest income and funds from the Committee's authorized reserve, will be adequate to cover budgeted expenses. Funds in the reserve will be kept within the maximum permitted by the order.

While this rule will impose some additional costs on handlers, the costs are in the form of uniform assessments on all handlers. Some of the additional costs may be passed on to producers. However, these costs will be offset by the benefits derived by the operation of the marketing order. Therefore, the AMS has determined that this rule will not have a significant economic impact on a substantial number of small entities. Interested persons are invited to submit information on the regulatory and informational impacts of this action on small business.

The assessment rate established in this rule will continue in effect indefinitely unless modified, suspended, or terminated by the Secretary upon recommendation and information submitted by the Committee or other available information.

Although this assessment rate is effective for an indefinite period, the Committee will continue to meet prior to or during each fiscal period to recommend a budget of expenses and consider recommendations for modification of the assessment rate. The dates and times of Committee meetings are available from the Committee or the Department. Committee meetings are open to the public and interested persons may express their views at these meetings. The Department will evaluate Committee recommendations and other available information to determine whether modification of the assessment rate is needed. Further rulemaking will be undertaken as necessary. The Committee's 1996–97 budget and those for subsequent fiscal periods will be reviewed and, as appropriate, approved by the Department.

After consideration of all relevant material presented, including the information and recommendation submitted by the Committee and other available information, it is hereby found that this rule, as hereinafter set forth, will tend to effectuate the declared policy of the Act.

Pursuant to 5 U.S.C. 553, it is also found and determined upon good cause that it is impracticable, unnecessary, and contrary to the public interest to give preliminary notice prior to putting this rule into effect, and that good cause exists for not postponing the effective date of this rule until 30 days after publication in the Federal Register because: (1) The Committee needs to have sufficient funds to pay its expenses which are incurred on a continuous basis; (2) the 1996–97 fiscal period begins on August 1, 1996, and the marketing order requires that the rate of assessment for each fiscal period apply to all assessable oranges and grapefruit handled during such fiscal period; (3) handlers are aware of this action which was recommended by the Committee at a public meeting and is similar to other assessment rate actions issued in past years; and (4) this interim final rule provides a 30-day comment period, and all comments timely received will be considered prior to finalization of this rule.

List of Subjects in 7 CFR Part 906

Marketing agreements, Grapefruit, Oranges, Reporting and recordkeeping requirements.

For the reasons set forth in the preamble, 7 CFR part 906 is amended as follows:

PART 906—ORANGES AND GRAPEFRUIT GROWN IN THE LOWER RIO GRANDE VALLEY IN TEXAS

1. The authority citation for 7 CFR part 906 continues to read as follows:

Authority: 7 U.S.C. 601–674.

2. Section 906.235 is added to read as follows:

Note: This section will appear in the Code of Federal Regulations.

§ 906.235 Assessment rate.

On and after August 1, 1996, an assessment rate of $0.125 per 7/10 bushel carton is established for oranges

and grapefruit grown in the Lower Rio Grande Valley in Texas.

Dated: July 15, 1996.

Robert C. Keeney,

Director, Fruit and Vegetable Division.

[FR Doc. 96–18465 Filed 7–19–96; 8:45 am]

BILLING CODE 3410–02–P

---

7 CFR Parts 916 and 917

[Docket No. FV96–916–1 IFR]

Nectarines and Fresh Peaches Grown in California; Assessment Rate

AGENCY: Agricultural Marketing Service, USDA.

ACTION: Interim final rule with request for comments.

SUMMARY: This interim final rule establishes an assessment rate for the Nectarine Administrative Committee and the Peach Commodity Committee (Committees) under Marketing Order Nos. 916 and 917 for the 1996–97 and subsequent fiscal periods. The Committees are responsible for local administration of the marketing orders which regulate the handling of nectarines and fresh peaches grown in California. Authorization to assess nectarine and fresh peach handlers enable the Committees to incur expenses that are reasonable and necessary to administer the programs.

DATES: Effective on March 1, 1996. Comments received by August 21, 1996, will be considered prior to issuance of a final rule.

ADDRESSES: Interested persons are invited to submit written comments concerning this rule. Comments must be sent in triplicate to the Docket Clerk, Fruit and Vegetable Division, AMS, USDA, P.O. Box 96456, room 2523–S, Washington, DC 20090–6456, FAX (202) 720–5698. Comments should reference the docket number and the date and page number of this issue of the Federal Register and will be available for public inspection in the Office of the Docket Clerk during regular business hours.

FOR FURTHER INFORMATION CONTACT: Mary Kate Nelson, Marketing Assistant, California Marketing Field Office, Fruit and Vegetable Division, AMS, USDA, 2202 Monterey Street, suite 102B, Fresno, California 93721, (209) 487–5901, FAX (209) 487–5906, or Kenneth G. Johnson, Marketing Specialist, Marketing Order Administration Branch, Fruit and Vegetable Division, AMS, USDA, P.O. Box 96456, room 2523–S, Washington, DC 20090–6456, telephone (202) 720–5127, FAX (202) 720–5698. Small businesses may request information on compliance with this regulation by contacting: Jay Guerber, Marketing Order Administration Branch, Fruit and Vegetable Division, AMS, USDA, P.O. Box 96456, Room 2523–S, Washington, DC 20090–6456; telephone: (202) 720–2491, Fax # (202) 720–5698.

SUPPLEMENTARY INFORMATION: This rule is issued under Marketing Agreement No. 916 and Order No. 916, both as amended (7 CFR part 916), regulating the handling of nectarines grown in California, and Marketing Agreement No. 917 and Order No. 917, both as amended (7 CFR part 917), regulating the handling of fresh peaches grown in California, hereinafter referred to as the ''orders.'' The marketing agreements and orders are effective under the Agricultural Marketing Agreement Act of 1937, as amended (7 U.S.C. 601–674), hereinafter referred to as the ''Act.''

The Department of Agriculture (Department) is issuing this rule in conformance with Executive Order 12866.

This rule has been reviewed under Executive Order 12778, Civil Justice Reform. Under the marketing orders now in effect, California nectarine and fresh peach handlers are subject to assessments. Funds to administer the orders are derived from such assessments. It is intended that the assessment rates as issued herein will be applicable to all assessable nectarines and peaches beginning March 1, 1996, and continuing until amended, suspended, or terminated. This rule will not preempt any State or local laws, regulations, or policies, unless they present an irreconcilable conflict with this rule.

The Act provides that administrative proceedings must be exhausted before parties may file suit in court. Under section 608c(15)(A) of the Act, any handler subject to an order may file with the Secretary a petition stating that the order, any provision of the order, or any obligation imposed in connection with the order is not in accordance with law and request a modification of the order or to be exempted therefrom. Such handler is afforded the opportunity for a hearing on the petition. After the hearing the Secretary would rule on the petition. The Act provides that the district court of the United States in any district in which the handler is an inhabitant, or has his or her principal place of business, has jurisdiction to review the Secretary's ruling on the petition, provided an action is filed not later than 20 days after the date of the entry of the ruling.

Pursuant to requirements set forth in the Regulatory Flexibility Act (RFA), the Agricultural Marketing Service (AMS) has considered the economic impact of this rule on small entities.

The purpose of the RFA is to fit regulatory actions to the scale of business subject to such actions in order that small businesses will not be unduly or disproportionately burdened. Marketing orders issued pursuant to the Act, and the rules issued thereunder, are unique in that they are brought about through group action of essentially small entities acting on their own behalf. Thus, both statutes have small entity orientation and compatibility.

There are approximately 1,800 producers of nectarines and peaches in the production area and approximately 300 handlers subject to regulation under the marketing order. Small agricultural producers have been defined by the Small Business Administration (13 CFR 121.601) as those having annual receipts less than $500,000, and small agricultural service firms are defined as those whose annual receipts are less than $5,000,000. The majority of nectarine and fresh peach producers and handlers may be classified as small entities.

The nectarine and peach marketing orders provide authority for the Committees, with the approval of the Department, to formulate annual budgets of expenses and collect assessments from handlers to administer the programs. The members of the Committees are producers and handlers of California nectarines and fresh peaches. They are familiar with the Committees' needs and with the costs for goods and services in their local area and are thus in a position to formulate appropriate budgets and assessment rates. The assessment rates are formulated and discussed in public meetings. Thus, all directly affected persons have an opportunity to participate and provide input.

The Nectarine Administrative Committee met on May 2, 1996, and unanimously recommended 1996–97 expenditures of $3,682,728 and an assessment rate of $0.1850 per 25-pound container or equivalent of nectarines. In comparison, last year's budgeted expenditures were $3,683,031. The assessment rate of $0.1850 is the same as last year's established rate. Major expenditures recommended by the Committee for the 1996–97 year include $1,326,376 for domestic market development, $972,300 for inspection, $342,250 in salaries and benefits, and $120,870 for research.

The Peach Commodity Committee met on May 1, 1996, and unanimously recommended 1996–97 expenditures of $3,722,757 and an assessment rate of

$0.1900 per 25-pound container or equivalent of fresh peaches. In comparison, last year's budgeted expenditures were $3,736,531. The assessment rate of $0.1900 is the same as last year's established rate. Major expenditures recommended by the Committee for the 1996–97 year include $1,326,376 for domestic market development, $991,500 for inspection, $342,250 in salaries and benefits, and $120,870 for research.

The assessment rates recommended by the Committees were derived by dividing anticipated expenses by expected shipments of California nectarines and fresh peaches. Nectarine shipments for the year are estimated at 17,266,000 25-pound containers or equivalent which should provide $3,194,210 in assessment income, and fresh peach shipments for the year are estimated at 17,250,000 25-pound containers or equivalent which should provide $3,277,500 in assessment income. Income derived from handler assessments, the Plum Commodity Committee, and the Pear Field Service, along with interest income and funds from the Committees' authorized reserves, will be adequate to cover budgeted expenses. Funds in the reserves will be kept within the maximum permitted by the orders.

While this rule will impose some additional costs on handlers, the costs are in the form of uniform assessments on all handlers. Some of the additional costs may be passed on to producers. However, these costs will be offset by the benefits derived by the operation of the marketing order. Therefore, the AMS has determined that this rule will not have a significant economic impact on a substantial number of small entities.

The assessment rates established in this rule will continue in effect indefinitely unless modified, suspended, or terminated by the Secretary upon recommendation and information submitted by the Committees or other available information.

Although these assessment rates are effective for an indefinite period, the Committees will continue to meet prior to or during each fiscal period to recommend budgets of expenses and consider recommendations for modification of their assessment rates. The dates and times of Committee meetings are available from the Committees or the Department. Committee meetings are open to the public and interested persons may express their views at these meetings. The Department will evaluate the Committees' recommendations and other available information to determine whether modification of the assessment rates are needed. Further rulemaking will be undertaken as necessary. The Committees' 1996–97 budgets and those for subsequent fiscal periods will be reviewed and, as appropriate, approved by the Department.

After consideration of all relevant material presented, including the information and recommendation submitted by the Committees and other available information, it is hereby found that this rule, as hereinafter set forth, will tend to effectuate the declared policy of the Act.

Pursuant to 5 U.S.C. 553, it is also found and determined upon good cause that it is impracticable, unnecessary, and contrary to the public interest to give preliminary notice prior to putting this rule into effect, and that good cause exists for not postponing the effective date of this rule until 30 days after publication in the Federal Register because: (1) The Committees need to have sufficient funds to pay their expenses which are incurred on a continuous basis; (2) the 1996–97 fiscal period began on March 1, 1996, and the marketing orders require that the rates of assessment for each fiscal period apply to all assessable nectarines and peaches handled during such fiscal period; (3) handlers are aware of this action which was unanimously recommended by the Committees at public meetings and are similar to other assessment rate actions issued in past years; and (4) this interim final rule provides a 30-day comment period, and all comments timely received will be considered prior to finalization of this rule.

List of Subjects

7 CFR Part 916

Marketing agreements, Nectarines, Reporting and recordkeeping requirements.

7 CFR Part 917

Marketing agreements, Peaches, Pears, Reporting and recordkeeping requirements.

For the reasons set forth in the preamble, 7 CFR parts 916 and 917 are amended as follows:

PART 916—NECTARINES GROWN IN CALIFORNIA

1. The authority citation for 7 CFR part 916 continues to read as follows:

Authority: 7 U.S.C. 601–674.

2. A new subpart—Assessment Rates and a new § 916.234 are added to read as follows:

Note: This section will appear in the Code of Federal Regulations.

Subpart—Assessment Rates

§ 916.234 Assessment rate.

On and after March 1, 1996, an assessment rate of $0.1850 per 25-pound container or equivalent of nectarines is established for California nectarines.

PART 917—FRESH PEARS AND PEACHES GROWN IN CALIFORNIA

1. The authority citation for 7 CFR part 917 continues to read as follows:

Authority: 7 U.S.C. 601–674.

2. A new subpart—Assessment Rates and a new § 917.258 are added to read as follows:

Note: This section will appear in the Code of Federal Regulations.

Subpart—Assessment Rates

§ 917.258 Assessment rate.

On and after March 1, 1996, an assessment rate of $0.1900 per 25-pound container or equivalent of fresh peaches is established for California fresh peaches.

Dated: July 15, 1996.

Robert C. Keeney,

Director, Fruit and Vegetable Division.

[FR Doc. 96–18466 Filed 7–19–96; 8:45 am]

BILLING CODE 3410–02–P

Rural Utilities Service

7 CFR Part 1703

RIN 0572–AB22

Distance Learning and Telemedicine Grant Program; Correction

AGENCY: Rural Utilities Service, USDA.

ACTION: Correction to final regulation.

SUMMARY: This document contains corrections to the final regulation on the distance learning and telemedicine grant program which was published Thursday, June 27, 1996, (61 FR 33622). Due to inadvertent errors in the final rule that may prove to be misleading, the Rural Utilities Service (RUS) is publishing this correction.

EFFECTIVE DATE: June 27, 1996.

FOR FURTHER INFORMATION CONTACT: Barbara L. Eddy, Deputy Assistant Administrator, Telecommunications Program, (202) 720–9549.

SUPPLEMENTARY INFORMATION:

Background

RUS published a final rule in the Federal Register on Thursday, June 27,

1996, that amended its regulations on the distance learning and telemedicine grant program that provides grants for distance learning and telemedicine projects benefiting rural areas.

Need for Correction

As published, the final regulation contains errors which may prove to be misleading and are in need of clarification.

Correction of Publication

Accordingly, the publication on June 27, 1996 of the final regulation is corrected as follows:

§ 1703.107 [Corrected]

1. On page 33629, in the third column, in § 1703.107, remove between paragraphs (a)(2) and (a)(3).

§ 1703.117 [Corrected]

2. On page 33634, in the second column, in § 1703.117, in paragraph (e)(8), under ''Example Calculation'', Steps (3), (4) and (5) are corrected to read as follows:

* * * * *

(e) * * *

(8) * * *

Example Calculation. * * *

Step (3) Greenbriar County, ERS Rural-Urban Continuum Scale category 6=35 points;

Lewis County, ERS Rural-Urban Continuum Scale category 7=40 points;

Fayette County, ERS Rural-Urban Continuum Scale category 5=20 points.

Step (4) Midway site-35 points ×33%=11.6 points.

Lewistown site-40 points×33%=13.2 points.

Rocky Creek site-20 points ×33%=6.6 points.

Step (5) 11.6+13.2+6.6=31.4 total weighted average score.

* * * * *

§ 1703.118 [Corrected]

3. On page 33635, second column, in § 1703.118, in paragraph (a)(3), second to the last line, correct ''§ 1703.107(h)'' to read ''§ 1703.107(e)''.

Robert Peters,

Acting Administrator.

[FR Doc. 96–18402 Filed 7–19–96; 8:45 am]

BILLING CODE 3410–15–M

DEPARTMENT OF TRANSPORTATION

Federal Aviation Administration

14 CFR Chapter III

[Docket No. 28636]

CFR Chapter Name Change

AGENCY: Federal Aviation Administration, DOT.

ACTION: Final rule; request for comment.

SUMMARY: This document renames the chapter heading of Chapter III, Title 14, Code of Federal Regulations. The office of the Associate Administrator for Commercial Space Transportation, Department of Transportation became part of the Federal Aviation Administration on November 15, 1995. As published, Chapter III of 14 Code of Federal Regulations does not describe commercial space activities as being part of the Federal Aviation Administration. It is therefore necessary to rename the chapter heading to reflect that administrative change.

DATES: This final rule is effective July 22, 1996. Comments on the final rule must be received by August 21, 1996.

ADDRESSES: Comments on this final rule should be mailed, in triplicate, to Federal Aviation Administration, Office of the Chief Counsel, Attention: Rules Docket (AGC–200), Docket No. 28636, 800 Independence Avenue, SW., Washington, DC 20591. Comments delivered must be marked Docket No. 28636. Comments may be examined in room 915G weekdays between 8:30 a.m. and 5 p.m., except on Federal holidays.

FOR FURTHER INFORMATION CONTACT: Laura Montgomery of the Office of the Chief Counsel, Federal Aviation Administration, U.S. Department of Transportation, 400 7th Street, SW., Room 10424, Washington, DC 20590. Telephone number: (202) 366–9305.

SUPPLEMENTARY INFORMATION: Effective November 15, 1995, the Commercial Space Transportation organization was transferred from the Office of the Secretary to the Federal Aviation Administration, where it now operates as the FAA's seventh line of business. *Transfer of Delegations,* 60 FR 62762 (Dec. 7, 1995). With the redelegation of authority, the Director of the Office of Commercial Space Transportation became the FAA's Associate Administrator for Commercial Space Transportation. Accordingly, the heading of Chapter III of 14 Code of Federal Regulations is changed to reflect that the implementing regulations for commercial space transportation are now administered through the FAA.

In consideration of the foregoing, and under the authority of 49 U.S.C. 70101 through 70119 and 49 CFR 1.45, the Federal Aviation Administration revises the heading of Chapter III, 14 Code of Federal Regulations to read as follows:

CHAPTER III—COMMERCIAL SPACE TRANSPORTATION, FEDERAL AVIATION ADMINISTRATION, DEPARTMENT OF TRANSPORTATION (PARTS 400 TO 499)

Issued in Washington, DC, on July 17, 1996.

Donald P. Byrne,

Assistant Chief Counsel for Regulations, Federal Aviation Administration.

[FR Doc. 96–18531 Filed 7–19–96; 8:45 am]

BILLING CODE 4910–13–M

14 CFR Part 39

[Docket No. 95–ANE–26; Amendment 39–9693; AD 96–15–02]

RIN 2120–AA64

Airworthiness Directives; Pratt & Whitney Wasp Series and R–1340 Series (Military) Reciprocating Engines

AGENCY: Federal Aviation Administration, DOT.

ACTION: Final rule; request for comments.

SUMMARY: This amendment adopts a new airworthiness directive (AD) that is applicable to Pratt & Whitney Wasp series and R–1340 series (military) reciprocating engines. This action requires initial and repetitive visual and dye penetrant inspections of the crankshaft counterweights for cracks, and replacement of cracked crankshaft counterweights with improved crankshaft counterweights. This amendment is prompted by reports of crankshaft counterweight cracking. The actions specified in this AD are intended to prevent engine failure due to crankshaft counterweight failure, which could result in damage to or loss of the aircraft.

DATES: Effective August 12, 1996.

The incorporation by reference of certain publications listed in the regulations is approved by the Director of the Federal Register as of August 12, 1996.

Comments for inclusion in the Rules Docket must be received on or before September 20, 1996.

ADDRESSES: Submit comments in triplicate to the Federal Aviation Administration (FAA), New England Region, Office of the Assistant Chief Counsel, Attention: Rules Docket No. 95–ANE–26, 12 New England Executive Park, Burlington, MA 01803–5299. Comments may also be submitted to the Rules Docket by using the following Internet address: ''epd-adcomments@mail.hq.faa.gov''. All comments must contain the Docket No. in the subject line of the comment.

The service information referenced in this AD may be obtained from Air Tractor, Inc., Olney Municipal Airport, Olney, TX 76374; telephone (817) 564–5616, fax (817) 564–2348. This

information may be examined at the FAA, New England Region, Office of the Assistant Chief Counsel, 12 New England Executive Park, Burlington, MA; or at the Office of the Federal Register, 800 North Capitol Street, NW., suite 700, Washington, DC.

FOR FURTHER INFORMATION CONTACT: Richard D. Karanian, Aerospace Engineer, Special Certification Office, FAA, Rotorcraft Directorate, 2601 Meacham Blvd., Fort Worth, TX 76137–4298; telephone (817) 222–5195, fax (817) 222–5959.

SUPPLEMENTARY INFORMATION: The Federal Aviation Administration (FAA) has received reports of counterweight cracking on Air Tractor, Inc., Part Number (P/N) 90114 Parts Manufacturer Approval (PMA) replacement crankshafts installed on Pratt & Whitney (PW) Wasp series and R–1340 series (military) reciprocating engines. Cracks have been found in three rear counterweights, P/N 90134, immediately adjacent to the 4½ order flyweight, or dynamic counterweight. In two cases, the cracks were observed during overhaul inspections after a normal runout; in one case, Air Tractor, Inc. has advised the FAA that a counterweight crack may have caused or contributed to an engine failure during agricultural spraying operations in Argentina. This condition, if not corrected, could result in engine failure due to crankshaft counterweight failure, which could result in damage to or loss of the aircraft.

The manufacturer advised the FAA of the crankshaft counterweight failure in Argentina and the possible connection between this failure and a crack found in a second crankshaft counterweight with 900 hours in agricultural service in the United States. Air Tractor, Inc. released an initial Service Letter (SL), Snow Engineering Co. SL No. 134, dated November 29, 1994, advising all owners of Air Tractor, Inc. PMA crankshafts to perform within the next 10 hours time in service (TIS) a visual and dye penetrant inspection of the crankshaft counterweights to detect cracking. This SL detailed an inspection procedure which required the removal of one cylinder to gain access to the crankshaft. Air Tractor, Inc. demonstrated this inspection procedure to the FAA on November 28, 1994.

In January and February 1995, Air Tractor, Inc. performed an engine test at their facility to demonstrate a reasonable interval for engine operation between inspections. The test consisted of cutting through the counterweight at the location where cracks were initially found and running the engine at a series of loads simulating actual flight loads for 202.5 hours (recording tachometer) without failure. This test was run using an FAA-approved test procedure with FAA oversight.

Based on this experience, Air Tractor, Inc. has issued Snow Engineering Co. SL No. 135, dated February 1, 1995, that supersedes the inspection requirements of Snow Engineering Co. SL No. 134; however, the rework procedure described in Snow Engineering Co. SL No. 134 remains in effect for the purpose of this AD. The FAA has reviewed and approved the technical contents of Snow Engineering Co. SL No. 135, dated February 1, 1995, that describes procedures for an initial inspection of crankshaft counterweights prior to 300 hours TIS, with repetitive inspections every 150 hours TIS. Snow Engineering Co. SL No. 134 describes replacement of crankshaft counterweights, P/N 90133 and 90134, with redesigned FAA–PMA crankshaft counterweights, P/N 90133–1 and 90134–1 at the next overhaul or if a crack is found during an inspection. Air Tractor, Inc. has advised the FAA that it will replace crankshaft counterweights in accordance with Snow Engineering Co. SL No. 134, dated November 29, 1994, on all crankshafts delivered to their facility under warranty, free of charge.

Air Tractor, Inc. has advised the FAA that crankshafts manufactured and shipped after November 18, 1994, incorporate the FAA-approved redesigned crankshaft counterweights, P/N 90133–1 and 90134–1, and are not subject to inspections. Only Air Tractor, Inc. crankshaft counterweights, P/N 90133–1 and 90134–1, are eligible for installation in accordance with the rework procedures described in Snow Engineering Co. SL No. 134. No other parts are currently approved for installation in compliance with this AD.

Since an unsafe condition has been identified that is likely to exist or develop on other engines of the same type design, this AD is being issued to prevent engine failure due to crankshaft counterweight failure, which could result in damage to or loss of the aircraft. This AD requires initial and repetitive visual and dye penetrant inspections of the crankshaft counterweights for cracks, and replacement of crankshaft counterweights with improved crankshaft counterweights if a crack is found during inspection, at the next overhaul, or at the next crankshaft removal, whichever occurs first. The actions are required to be accomplished in accordance with the SL described previously.

Since a situation exists that requires the immediate adoption of this regulation, it is found that notice and opportunity for prior public comment hereon are impracticable, and that good cause exists for making this amendment effective in less than 30 days.

Comments Invited

Although this action is in the form of a final rule that involves requirements affecting flight safety and, thus, was not preceded by notice and an opportunity for public comment, comments are invited on this rule. Interested persons are invited to comment on this rule by submitting such written data, views, or arguments as they may desire. Communications should identify the Rules Docket number and be submitted in triplicate to the address specified under the caption **ADDRESSES**. All communications received on or before the closing date for comments will be considered, and this rule may be amended in light of the comments received. Factual information that supports the commenter's ideas and suggestions is extremely helpful in evaluating the effectiveness of the AD action and determining whether additional rulemaking action would be needed.

Comments are specifically invited on the overall regulatory, economic, environmental, and energy aspects of the rule that might suggest a need to modify the rule. All comments submitted will be available, both before and after the closing date for comments, in the Rules Docket for examination by interested persons. A report that summarizes each FAA-public contact concerned with the substance of this AD will be filed in the Rules Docket.

Commenters wishing the FAA to acknowledge receipt of their comments submitted in response to this notice must submit a self-addressed, stamped postcard on which the following statement is made: ''Comments to Docket Number 95–ANE–26.'' The postcard will be date stamped and returned to the commenter.

The regulations adopted herein will not have substantial direct effects on the States, on the relationship between the national government and the States, or on the distribution of power and responsibilities among the various levels of government. Therefore, in accordance with Executive Order 12612, it is determined that this final rule does not have sufficient federalism implications to warrant the preparation of a Federalism Assessment.

The FAA has determined that this regulation is an emergency regulation that must be issued immediately to

correct an unsafe condition in aircraft, and is not a ''significant regulatory action'' under Executive Order 12866. It has been determined further that this action involves an emergency regulation under DOT Regulatory Policies and Procedures (44 FR 11034, February 26, 1979). If it is determined that this emergency regulation otherwise would be significant under DOT Regulatory Policies and Procedures, a final regulatory evaluation will be prepared and placed in the Rules Docket. A copy of it, if filed, may be obtained from the Rules Docket at the location provided under the caption **ADDRESSES**.

List of Subjects in 14 CFR Part 39

Air transportation, Aircraft, Aviation safety, Incorporation by reference, Safety.

Adoption of the Amendment

Accordingly, pursuant to the authority delegated to me by the Administrator, the Federal Aviation Administration amends part 39 of the Federal Aviation Regulations (14 CFR part 39) as follows:

PART 39—AIRWORTHINESS DIRECTIVES

1. The authority citation for part 39 continues to read as follows:

Authority: 49 USC 106(g), 40113, 44701.

§ 39.13 [Amended]

2. Section 39.13 is amended by adding the following new airworthiness directive:

96–15–02 Pratt & Whitney: Amendment 39–9693. Docket 95–ANE–26.

Applicability: Pratt & Whitney (PW) Wasp Models S1H1 and S3H1, and Model R–1340–AN–1 (military) reciprocating engines, incorporating Air Tractor, Inc. Parts Manufacturer Approval (PMA) crankshafts, Part Number (P/N) 90114. These engines are installed on but not limited to the following aircraft: Ag Cat Corporation (formerly Schweizer Aircraft Corporation) Models G–164A, G–164B, and G–164C; Air Tractor, Inc. Models AT–301 and AT–401; Ayres Corporation Models 600 S–2C, 600 S2D, S–2R, S2R–R1340; EMAIR Model MA–1; North American Aviation, Inc. Models BC–1A, AT–6, AT–6A, AT–6B, AT–6C, AT–6D, AT–6F, and T–6G; and Transland Model Ag–2.

Note: This airworthiness directive (AD) applies to each engine identified in the preceding applicability provision, regardless of whether it has been modified, altered, or repaired in the area subject to the requirements of this AD. For engines that have been modified, altered, or repaired so that the performance of the requirements of this AD is affected, the owner/operator must request approval for an alternative method of compliance in accordance with paragraph (h) of this AD. The request should include an assessment of the effect of the modification, alteration, or repair on the unsafe condition addressed by this AD; and, if the unsafe condition has not been eliminated, the request should include specific proposed actions to address it.

Compliance: Required as indicated, unless accomplished previously.

To prevent engine failure due to crankshaft counterweight failure, which could result in damage to or loss of the aircraft, accomplish the following:

(a) For crankshafts with 290 or more hours time in service (TIS) on the effective date of this AD, perform an initial visual and dye penetrant inspection of the crankshaft counterweights for cracks within 10 hours TIS after the effective date of this AD in accordance with Snow Engineering Co. Service Letter (SL) No. 135, dated February 1, 1995. If cracks are found, prior to further flight, remove from service and rework the crankshaft by replacing cracked counterweights in accordance with the rework procedures described in Snow Engineering Co. SL No. 134, dated November 29, 1994, or replace with a serviceable part.

(b) For crankshafts with less than 290 hours TIS on the effective date of this AD, perform an initial visual and dye penetrant inspection of the crankshaft counterweights for cracks prior to accumulating 300 hours total TIS on the crankshaft, in accordance with Snow Engineering Co. SL No. 135, dated February 1, 1995. If cracks are found, prior to further flight, remove from service and rework the crankshaft by replacing cracked counterweights in accordance with the rework procedures described in Snow Engineering Co. SL No. 134, dated November 29, 1994, or replace with a serviceable part.

(c) For crankshafts that have not been reworked in accordance with the rework procedures described in Snow Engineering Co. SL No. 134, dated November 29, 1994, perform repetitive visual and dye penetrant inspections of the crankshaft counterweights for cracks, at intervals not to exceed 150 hours TIS since last inspection, in accordance with Snow Engineering Co. SL No. 135, dated February 1, 1995. If cracks are found, prior to further flight remove from service and rework the crankshaft by replacing cracked counterweights in accordance with the rework procedures described in Snow Engineering Co. SL No. 134, dated November 29, 1994, or replace with a serviceable part.

(d) If a cylinder assembly is removed for any reason, perform a visual and dye penetrant inspection of the crankshaft counterweights for cracks in accordance with Snow Engineering Co. SL No. 135, dated February 1, 1995. If cracks are found, prior to further flight, remove from service and rework the crankshaft by replacing cracked counterweights in accordance with the rework procedures described in Snow Engineering Co. SL No. 134, dated November 29, 1994, or replace with a serviceable part. Count the 150 hours TIS interval for the repetitive inspections in accordance with paragraph (c) of this AD at cylinder assembly removal.

(e) At the next overhaul after the effective date of this AD, or at the next crankshaft removal, whichever occurs first, remove from service and replace crankshaft counterweights in accordance with the rework procedures described in Snow Engineering Co. SL No. 134, dated November 29, 1994. Incorporation of the improved crankshaft counterweights, Air Tractor, Inc. P/N 90133–1 and 90134–1, constitutes terminating action to the repetitive inspections required by paragraph (c) of this AD.

(f) No action is required for reworked and new manufactured crankshafts incorporating improved crankshaft counterweights, Air Tractor, Inc. P/N 90133–1 and 90134–1, which are indelibly marked on the counterweight front and rear surfaces.

(g) No action is required for other FAA-approved crankshafts besides those manufactured by Air Tractor, Inc. However, intermixing of Air Tractor, Inc. and other crankshaft assembly parts other than PW crankshaft assembly parts is prohibited.

Note: Air Tractor, Inc. Top Drawing No. 90U4 permits use of PW components, and virtually all Air Tractor, Inc. crankshafts have some PW parts installed.

(h) An alternative method of compliance or adjustment of the compliance time that provides an acceptable level of safety may be used if approved by the Manager, Special Certification Office. The request should be forwarded through an appropriate FAA Maintenance Inspector, who may add comments and then send it to the Manager, Special Certification Office.

Note: Information concerning the existence of approved alternative methods of compliance with this airworthiness directive, if any, may be obtained from the Special Certification Office.

(i) Special flight permits may be issued in accordance with sections 21.197 and 21.199 of the Federal Aviation Regulations (14 CFR 21.197 and 21.199) to operate the aircraft to a location where the inspections can be accomplished.

(j) The actions required by this AD shall be done in accordance with the following service documents:

Document No.	Pages	Date
Snow Engineering Co., SL No. 134. Total pages: 5	1–5	November 29, 1994.
Snow Engineering Co., SL No. 135. Total pages: 4	1–4	February 1, 1995.

This incorporation by reference was approved by the Director of the Federal Register in accordance with 5 U.S.C. 552(a) and 1 CFR part 51. Copies may be obtained from Air Tractor, Inc., Olney Municipal Airport, Olney, TX 76374; telephone (817) 564–5616, fax (817) 564–2348. Copies may be inspected at the FAA, New England Region, Office of the Assistant Chief Counsel, 12 New England Executive Park, Burlington, MA; or at the Office of the Federal Register, 800 North Capitol Street, NW., suite 700, Washington, DC.

(k) This amendment becomes effective on August 12, 1996.

Issued in Burlington, Massachusetts, on July 12, 1996.

Jay J. Pardee,

Manager, Engine and Propeller Directorate, Aircraft Certification Service.

[FR Doc. 96–18395 Filed 7–19–96; 8:45 am]

BILLING CODE 4910–13–U

DEPARTMENT OF THE TREASURY

Customs Service

19 CFR Part 102

[T.D. 96–56]

Rules of Origin for Textile and Apparel Products

AGENCY: U.S. Customs Service, Department of the Treasury.

ACTION: Final rule.

SUMMARY: This document sets forth technical corrections to the Customs Regulations which govern the determination of the country of origin of textile and apparel products for purposes of laws enforced by Customs. The changes involve an updating of certain tariff subheading references and the correction of an error in the text of one tariff shift rule.

EFFECTIVE DATE: July 22, 1996.

FOR FURTHER INFORMATION CONTACT: Phil Robins, Office of Regulations and Rulings (202–482–7029).

SUPPLEMENTARY INFORMATION:

Background

On September 5, 1995, Customs published T.D. 95–69 in the Federal Register (60 FR 46188) containing final amendments to the Customs Regulations to set forth standards governing the determination of the country of origin of textile and apparel products for purposes of laws enforced by Customs. The regulatory amendments primarily implemented the provisions of section 334 of the Uruguay Round Agreements Act (Public Law 103–465, 108 Stat. 4809) and included a new § 102.21 (19 CFR 102.21) which covers the majority of the section 334 provisions and applies to goods entered, or withdrawn from warehouse, for consumption on or after July 1, 1996.

Section 102.21(b)(5) defines a ''textile or apparel product'' as a good classifiable in specified chapters, headings or subheadings of the Harmonized Tariff Schedule of the United States (HTSUS). Section 102.21(c) sets forth the general rules for determining the country of origin of a textile or apparel product and, in paragraph (c)(2), allows for the determination of the country of origin of a good on the basis of a tariff classification change and/or other requirement specified for the good in paragraph (e). Paragraph (e) of § 102.21 incorporates a table consisting of a list of HTSUS headings and subheadings together with corresponding specified tariff shift and/or other requirements.

The HTSUS references in the § 102.21 texts were based on the 1995 version of the HTSUS. However, the 1996 version of the HTSUS incorporates a number of subheading number changes as a result of amendments made to the international Harmonized System, one of which involved the redesignation of subheading 7019.10 as subheading 7019.19 and another of which involved the replacement of subheading 7019.20 by new subheadings 7019.40–7019.59. Accordingly, this document makes the following changes within the § 102.21 texts to conform them to the 1996 HTSUS: (1) in the list of HTSUS headings and subheadings in paragraph (b)(5), ''7019.10.15'' is changed to read ''7019.19.15'' and ''7019.10.28'' is changed to read ''7019.19.28'' and ''7019.20'' is changed to read ''7019.40–59''; (2) in the table under paragraph (e), in the ''HTSUS'' column, ''7019.10.15'' is changed to read ''7019.19.15'' and ''7019.10.28'' is changed to read ''7019.19.28'' and ''7019.20'' is changed to read ''7019.40–7019.59'', and in the corresponding specific rules in the ''Tariff shift and/or other requirements'' column, each reference to ''7019.10.15'' is changed to read ''7019.19.15'' and each reference to ''7019.10.28'' is changed to read ''7019.19.28'' and the reference to ''7019.20'' is changed to read ''7019.40 through 7019.59''; and (3) also in the ''Tariff shift and/or other requirements'' column in the table under paragraph (e), in the second tariff shift rule for newly designated subheadings 7019.19.15 and 7019.19.28, the exception clause is changed to read ''except from subheading 7019.19.30 through 7019.19.90, 7019.31.00 through 7019.39.50, and 7019.90''.

In addition, it is noted that in the table under paragraph (e) of § 102.21, the tariff shift rule for newly designated subheadings 7019.40–7019.59 (which cover woven fabrics of rovings and other woven fabrics) specifies a change from any other ''heading'' and includes a proviso that the change must be the result of a fabric-making process. It is further noted that heading 7019 (which covers glass fibers and articles thereof) includes subheadings for glass fiber rovings (subheading 7019.12.00) and yarns (subheadings 7019.19.05–7019.19.28) which are the products from which the fabrics of subheadings 7019.40–7019.59 are made and without which those fabrics could not exist. Therefore, by specifying a change from any other ''heading'' (that is, any heading other than heading 7019) rather than a change from any other ''subheading'' (so as to allow a change from subheadings 7019.12.00 and 7019.19.05–7019.19.28), the tariff shift rule for subheadings 7019.40–7019.59 has no substantive utility because the rule disallows the very tariff shifts that would be involved in producing the goods covered by those subheadings. Accordingly, this document amends the tariff shift rule for subheadings 7019.40–7019.59 to refer to a change from any other ''subheading'' in order to correct this obvious drafting error.

Executive Order 12866, Regulatory Flexibility Act, and Inapplicability of Notice and Delayed Effective Date Requirements

This document does not meet the criteria for a ''significant regulatory action'' as specified in Executive Order 12866. In addition, pursuant to the provisions of the Regulatory Flexibility Act (5 U.S.C. 601 *et seq.*), it is certified that the amendments will not have a significant economic impact on a substantial number of small entities because the amendments either merely conform the regulations to existing statutory provisions or correct an obvious error. For the same reasons and in view of the July 1, 1996, effective date of the regulatory provisions to which these amendments relate, it is determined pursuant to the provisions of 5 U.S.C. 553(b)(B) that notice and public procedures thereon are unnecessary and contrary to the public interest, and it is determined pursuant to the provisions of 5 U.S.C. 553(d)(3) that good cause exists for dispensing with a delayed effective date.

Drafting Information

The principal author of this document was Francis W. Foote, Office of Regulations and Rulings, U.S. Customs Service. However, personnel from other offices participated in its development.

List of Subjects in 19 CFR Part 102

Customs duties and inspections, Imports, Reporting and recordkeeping requirements, Rules of origin, Trade agreements.

Amendments to the Regulations

Accordingly, for the reasons stated above, Part 102, Customs Regulations (19 CFR Part 102), is amended as set forth below.

PART 102—RULES OF ORIGIN

1. The authority citation for Part 102 continues to read as follows:

Authority: 19 U.S.C. 66, 1202 (General Note 20, Harmonized Tariff Schedule of the United States), 1624, 3314, 3592.

§ 102.21 [Amended]

2. Section 102.21(b)(5) is amended by removing the listings ''7019.10.15'' and ''7019.10.28'' and ''7019.20'' and adding, in their place in numerical order, the listings ''7019.19.15'' and ''7019.19.28'' and ''7019.40–59''.

3. In § 102.21(e), the table is amended by removing the entries for HTSUS 7019.10.15 and HTSUS 7019.10.28 and HTSUS 7019.20 and adding, in their place, entries for HTSUS 7019.19.15 and HTSUS 7019.19.28 and HTSUS 7019.40–7019.59 to read as follows:

§ 102.21 Textile and apparel products.

* * * * *

(e) * * *

HTSUS	Tariff shift and/or other requirements
*	* * * * * *
7019.19.15	(1) If the good is of filaments, a change to subheading 7019.19.15 from any other heading, provided that the change is the result of an extrusion process. (2) If the good is of staple fibers, a change to subheading 7019.19.15 from any other subheading, except from subheading 7019.19.30 through 7019.19.90, 7019.31.00 through 7019.39.50, and 7019.90, and provided that the change is the result of a spinning process.
7019.19.28	(1) If the good is of filaments, a change to subheading 7019.19.28 from any other heading, provided that the change is the result of an extrusion process. (2) If the good is of staple fibers, a change to subheading 7019.19.28 from any other subheading, except from subheading 7019.19.30 through 7019.19.90, 7019.31.00 through 7019.39.50, and 7019.90, and provided that the change is the result of a spinning process.
7019.40–7019.59	A change to subheading 7019.40 through 7019.59 from any other subheading, provided that the change is the result of a fabric-making process.
*	* * * * * *

George J. Weise,
Commissioner of Customs.

Approved: June 17, 1996.

John P. Simpson,
Deputy Assistant Secretary of the Treasury.

[FR Doc. 96–18545 Filed 7–19–96; 8:45 am]

BILLING CODE 4820–02–P

INTERNATIONAL TRADE COMMISSION

19 CFR Parts 201 and 207

Amendments to Rules of Practice and Procedure

AGENCY: United States International Trade Commission.

ACTION: Final rulemaking.

SUMMARY: The United States International Trade Commission (the Commission) hereby amends its Rules of Practice and Procedure concerning antidumping and countervailing duty investigations and reviews in 19 CFR parts 201 and 207. The amendments have two purposes. First, they conform the Commission's rules, on a permanent basis, to the requirements of the Uruguay Round Agreements Act (URAA). Second, the amendments will improve the effectiveness and efficiency of the Commission's procedures in conducting antidumping and countervailing duty investigations and reviews.

DATES: In accordance with the 30-day advance publication requirement imposed by 5 U.S.C. 553(d), the effective date of these rules is August 21, 1996.[1]

FOR FURTHER INFORMATION CONTACT: Marc A. Bernstein, Office of General Counsel, United States International Trade Commission, telephone 202–205–3087. Hearing-impaired individuals are advised that information on this matter can be obtained by contacting the Commission's TDD terminal on 202–205–1810.

SUPPLEMENTARY INFORMATION:

Background

The URAA was enacted on December 8, 1994. It contains provisions which, inter alia, amend Title VII of the Tariff Act of 1930, as amended (the Act) (19 U.S.C. 1671 et seq.) concerning antidumping and countervailing duty investigations and reviews. Enactment of the URAA necessitated that the Commission amend its rules concerning Title VII practice and procedure.

Commission rules to implement new legislation ordinarily are promulgated in accordance with the rulemaking procedures of section 553 of the Administrative Procedure Act (APA) (5 U.S.C. 551 et seq.), which entails the following steps: (1) Publication of a notice of proposed rulemaking; (2) solicitation of public comment on the proposed rules; (3) Commission review of such comments prior to developing final rules; and (4) publication of final rules thirty days prior to their effective date. See 5 U.S.C. 553. That procedure could not be utilized in this instance because the new legislation was enacted on December 8, 1994, and became effective on January 1, 1995. Because it was not possible to complete the section 553 rulemaking prior to the effective date of the new legislation, the Commission adopted interim rules that came into effect at the same time as the URAA. These interim amendments to part 207 of the Commission's rules of practice and procedure were published in the Federal Register on January 3, 1995. 60 FR 18 (Jan. 3, 1995). The Commission additionally requested comment on the interim rules.

Both as a result of comments received in response to the notice of interim rulemaking and as a result of the Commission's own independent examination of its procedures in antidumping and countervailing duty investigations and reviews, the Commission decided to propose permanent changes to its part 201 and 207 rules. The Commission published a Notice of Proposed Rulemaking (NOPR) in the Federal Register on October 3, 1995. 60 FR 51748 (Oct. 3, 1995). In the NOPR, the Commission proposed to issue as final rules all but one of the interim rules that were published in the January 3, 1995, Federal Register notice; it further proposed changes to several of these rules. The Commission also proposed amendments to several rules

[1] Commissioner Newquist and Commissioner Bragg disapproved the issuance of these final rules. Their reasons for disapproval are set forth in Memorandum CO67– and 71–T–007, copies of which are available on request from the Office of the Secretary, 202–205–2000.

that were not the subject of the interim rulemaking procedure. Some of these changes were intended to implement the new requirements of the URAA, while others were intended to improve generally the efficiency and effectiveness of the Commission's investigative process. The Commission also described in its NOPR several changes to internal agency procedures which did not require rulemaking to implement. The Commission additionally requested comment on the proposed rules.

Comments on the proposed rules were submitted by Rep. Phil English of the U.S. House of Representatives, the American Iron and Steel Institute (AISI), the American Yarn Spinners Association (AYSA), the Customs and International Trade Bar Association (CITBA), the Korean Foreign Trade Association (KFTA), the Lawyers' Committee of the Fair Trade Forum (Fair Trade Forum), and the Union of Needletrade, Industrial and Textile Employees, AFL–CIO (UNITE). The following law firms also filed comments: Aitken Irvin Lewin Berlin Vrooman & Cohn, representing the Pro Trade Group (Pro Trade); Collier, Shannon, Rill & Scott, representing 15 clients (Collier);[2] Dewey Ballantine, representing the Coalition for Fair Lumber Imports (Lumber Coalition); a joint submission by Dewey Ballantine and Skadden, Arps, Slate, Meagher & Flom on behalf of six producers of flat-rolled steel (Flat-Rolled Steel);[3] Hale and Dorr, representing Micron Technology, Inc. (Micron); King & Spalding, representing the Cement Alliance for Free Trade (Cement Alliance); Ober, Kaler, Grimes & Shriver, on its own behalf (Ober); Pepper, Hamilton & Scheetz, representing Gouvernement du Quebec (Quebec); Schagrin Associates, representing Weirton Steel Corp. and Committee on Pipe and Tube Imports (Schagrin); Stewart and Stewart, representing the Timken Co. and the Torrington Co. (Stewart); and Wiley, Rein & Fielding, representing four domestic producers of carbon steel wire rod (Steel Wire Rod).[4] The Commission's response to those comments pertinent to the subjects addressed in this rulemaking notice is provided below in the section-by-section analysis of the rulemaking amendments. The Commission notes here that it carefully considered the comments it received and, partly in response to those comments, determined not to adopt certain proposed rules that were identified by commenters as being overly burdensome. The Commission stresses that it has sought to revise the Title VII investigative procedure to improve and streamline data collection and make better use of the limited time allotted by the statute. The Commission appreciates the time and effort taken by the commenters to share their experiences and views, and believes that those comments have contributed to improved final rules.

The Commission has determined that these rules do not meet the criteria described in section 3(f) of the Executive Order 12866 (58 FR 51735, Oct. 4, 1993) (EO) and thus do not constitute a significant regulatory action for purposes of the EO. In accordance with the Regulatory Flexibility Act (5 U.S.C. 601 note), the Commission hereby certifies that pursuant to 5 U.S.C. 605(b) that the rules set forth in this notice are not likely to have a significant impact on a substantial number of small business entities. Moreover, the Commission maintains that the Regulatory Flexibility Act is inapplicable to this rulemaking, because it is not one for which a NOPR was required under 5 U.S.C. 553(b) or another statute. Although the Commission chose to publish such a notice on October 3, 1995, the amended rules are ''agency rules of procedure or practice'' and thus were exempt from the notice requirement imposed by 5 U.S.C. 553(b). Additionally, these rules do not contain any new reporting or recordkeeping requirements that would be subject to the Paperwork Reduction Act of 1995, 44 U.S.C. 3501 et seq.

Overview of the Revised Rules

The amendments to the part 201 and 207 regulations change Commission practice in antidumping and countervailing duty investigations and reviews in four principal areas. This section will provide an overview of the most significant changes. A detailed analysis of each change and the Commission's responses to the comments it received to the NOPR are provided in the section-by-section analysis below.

First, under the revised regulations, the Commission will conduct a single, continuous antidumping or countervailing duty investigation, in contrast to the discrete preliminary and final investigations it currently conducts. The purpose of this change, and certain related changes discussed below, is to streamline the investigative procedure. The Commission will continue to reach separate preliminary and final determinations, as required by statute. The portion of the investigation preceding issuance of the preliminary determination will be called the preliminary phase of the investigation. Under new § 207.18, when the Commission publishes notice of an affirmative preliminary determination, it will announce commencement of the final phase of the investigation. (In the event of a preliminary negative determination or a preliminary determination of negligible imports, the investigation is terminated.) Pursuant to new § 201.11(a)(2), parties that entered appearances in the preliminary phase of the investigation will not need to enter new appearances in the final phase. However, under new § 201.11(a)(3) parties that did not appear in the preliminary phase of the investigation may enter an appearance in the final phase at any time up until 21 days before the scheduled hearing date.

Commission staff will prepare and circulate to the parties draft questionnaires for the final phase investigation between the time the Commission issues its preliminary determination and the time the Department of Commerce (Commerce) issues its preliminary determination. The revised rules, unlike the proposed rules, do not specify a particular date on which the draft questionnaires will be circulated to the parties, leaving that to the discretion of the Commission's Director of Operations. Parties' comments on draft questionnaires, if any, will have to be filed with the Secretary (instead of being submitted to the Commission's Office of Investigations) and served on the other parties to the investigation.

The Commission has determined not to implement its proposals for filing of issues briefs and conducting an issues conference between the time it issues its preliminary determination and Commerce issues its preliminary determination. The Commission strongly encourages parties to use the opportunity for filing comments on draft questionnaires to identify issues they believe warrant data collection. The earlier that such issues are identified in

[2] American Beekeeping Federation, Inc.; American Honey Producers Association; Bicycle Manufacturers Association of America; Coalition for Fair Atlantic Salmon Trade; Copper & Brass Fabricators Council; Footwear Industries of America; Fresh Garlic Producers Association; Leather Industries of America; Nacco Materials Handling Group, Inc.; National Pasta Association; National Pork Producers Council; Specialty Steel Industry of North America; Specialty Tubing Group; Tanners' Countervailing Duty Coalition; Vemco Corp; Verson Division of Allied Products Corp.

[3] AK Steel Corp., Bethlehem Steel Corp., Inland Steel Industries, Inc., LTV Steel Co., National Steel Corp., and U.S. Steel Group, a unit of USX Corp.

[4] GS Industries, Inc., Co-Steel Raritan, Inc., Atlantic Steel Co., and Connecticut Steel Corp.

the course of the investigation, the better able the Commission will be to take such issues fully into account. Because there will be no issues brief, the Commission has also determined not to implement its proposal to impose page limits on prehearing briefs.

If Commerce issues a preliminary affirmative determination, the Commission will publish in the Federal Register a Notice of Scheduling for the final phase investigation pursuant to new § 207.21(a). This Notice of Scheduling will contain the same information (e.g., the date of the hearing, deadlines for filing briefs) that the Commission furnishes in the notice of institution of final investigation that it currently publishes in the Federal Register.

The second principal area of change pertains to regulations concerning the filing of petitions. The Commission has amended § 207.10 to require petitioners to serve confidential versions of the petition more promptly on interested parties whose applications to enter an administrative protective order (APO) have been approved. The Commission has also amended § 207.11 to require that petitioners include in the petition, to the extent reasonably available to the petitioner: (1) Identification of the proposed domestic like product(s); (2) a listing of all U.S. producers of each proposed domestic like product, including street addresses, phone numbers, and contact persons for each producer; (3) a listing of all U.S. importers of the subject merchandise, including street addresses and telephone numbers; (4) identification of each product on which the petitioner requests the Commission to seek pricing information in its questionnaires; and (5) information concerning sales and revenues lost by each petitioning firm. The Commission has determined not to adopt other proposals made in the NOPR that would have required that petitions include several additional types of information.

The third principal area of change pertains to final comments submitted in final phase investigations. Under new § 207.30, the maximum length of such comments has been increased from 10 pages to 15 pages. Additionally, the amended rule eliminates the provision stating that the Commission will disregard comments addressing information disclosed prior to the filing of posthearing briefs.

The fourth principal area of change pertains to treatment of business proprietary information (BPI). Section 201.6 has been amended expressly to permit parties and the Commission to provide in public submissions in certain circumstances nonquantitative characterizations of quantitative BPI. Provisions in §§ 201.6 and 207.7 concerning treatment of BPI not subject to disclosure under APO have been amended.

Section-by-Section Analysis of the Revised Rules

Section 201.6

The Commission has made three principal changes to § 201.6. The first concerns nonnumerical characterization of certain BPI. The second concerns provisions governing the filing of BPI not subject to disclosure under APO. The third concerns appeals from approval by the Secretary of requests for confidential treatment of submissions to the Commission.

Nonnumerical Characterization of Numerical BPI. The Commission is amending § 201.6(a) to allow parties and the Commission publicly to use non-quantitative characterizations to discuss confidential statistics unless the submitter of confidential information provides good cause for confidential treatment of such characterizations. This revision would apply only to confidential business information (CBI) and BPI submitted in numerical form; textual CBI and BPI could not be disclosed in any form.

The amendment to § 201.6(a) is unchanged from that proposed in the NOPR, except for the addition of a parenthetical to subsection (a)(2). Nine commenters discussed this proposal. Seven—CITBA, Fair Trade Forum, KFTA, Quebec, Schagrin, Steel Wire Rod, and Stewart—stated that they supported the proposal as drafted. Another commenter, Collier, also expressed support for the proposal, but indicated that the Commission should clarify the regulation to indicate precisely what the term ''nonnumerical characterizations'' means, and to describe what, if any, ''nonnumerical characterizations'' may be made other than those pertaining to trends. The final commenter, Cement Alliance, opposed the proposal on the grounds that it would not provide adequate protection for BPI submitted by one or two parties.

With respect to Cement Alliance's position, the Commission notes that under the rule a submitter will be able to claim confidential treatment for good cause shown for nonnumerical characterizations, such as trend data, of numerical BPI. If such a claim is made, the information must be treated as confidential until or unless the Secretary rejects the claim of confidentiality. These provisions should provide adequate protection for CBI and BPI.

The Commission also wishes to provide, in this preamble, several examples of how the regulation is intended to operate. As the regulation states, discussion of trends is a permissible ''nonnumerical characterization.'' Therefore, if quantitative information such as the quantity of domestic industry shipments would be confidential, a party or the Commission may state in a public document whether the quantity of shipments rose or declined from one year to the next. However, the public document may not provide information as to the degree or the absolute level of the decline or the increase. Consequently, while under new § 201.6(a) a public submission may state that ''shipments rose from 1995 to 1996,'' the submission should not state that ''shipments increased by 30 percent from 1995 to 1996'' or that ''shipments increased sharply from 1995 to 1996.'' There are also limited circumstances where discussion of information other than trends would be a permissible ''nonnumerical characterization.'' Thus, a public submission may state whether or not an industry was profitable or unprofitable in a given year, but should avoid characterizing the degree of industry profitability.

Although the Commission hopes the examples above will provide guidance to parties, it acknowledges that it cannot generically address how the amended regulation will apply to every conceivable fact pattern. The Commission advises parties that are unsure whether § 201.6(a) permits a specific public disclosure of a ''nonnumerical characterization'' not to make the disclosure, because counsel who make a disclosure that is not permitted by the regulation could be liable for breach of the APO. Of course, parties also may seek the advice of the investigator or the Secretary.

In the preamble to the NOPR, the Commission requested comment concerning the practical effects of the amendment to § 201.6(a) in circumstances where some but not all firms request that nonnumerical characterizations of their numerical BPI or CBI not be permitted in public documents. CITBA, Fair Trade Forum, Quebec, and Schagrin, the commenters addressing this matter, stated the Commission should in such instances exercise its discretion to determine whether the aggregated data should be released. The Commission adopts this suggestion, and will in fact exercise its discretion on an investigation-specific basis in such circumstances.

BPI Not Subject to Disclosure under APO. The second change to § 201.6 concerns BPI not subject to disclosure under APO pursuant to 777(c)(1)(A) of the Act. Under new § 201.6(a)(2), such information is now defined as ''nondisclosable confidential business information.''

The only comment received with respect to this issue addressed § 201.6(b)(3)(iv), which concerned the manner in which documents containing BPI not subject to disclosure under APO should be filed with the Commission. Stewart expressed the concern that proposed § 201.6(b)(3)(iv)(C), insofar as it requires double bracketing of BPI not subject to APO, suggests that ordinary BPI should not be double-bracketed. It noted that several law firms routinely double bracket ordinary BPI to effect its redaction by word-processing software. The Commission believes that, although Stewart's concern is well-founded, it is nevertheless preferable to have an uniform means for identifying nondisclosable confidential business information. Accordingly, amended § 201.6(b)(3)(iv)(C) will require nondisclosable confidential business information to be identified as such by triple bracketing. In other respects, the Commission is adopting the proposals it made in the NOPR.

Appeals from approval of confidential treatment. The Commission is amending § 201.6(f) to revise the procedure for filing and handling appeals from approval by the Secretary of requests for confidential treatment so as to essentially parallel the procedure in § 201.6(e) for appeals from denials of such requests. This amendment is unchanged from that proposed in the NOPR and was not addressed by any commenter.

Section 201.11

The Commission has amended § 201.11 in two respects. The first amendment concerns participation of consumer organizations and industrial users in antidumping and countervailing duty investigations and reviews. The second amendment concerns the filing of entries of appearance.

Consumer Organizations and Industrial Users. The URAA added § 777(h) to the Act, which requires the Commission to provide an opportunity for industrial users of subject merchandise, and, if the merchandise is sold at the retail level, representative consumer organizations, to submit relevant information concerning material injury by reason of subject imports. In the NOPR, the Commission proposed adding a new § 207.9 to the regulations to implement the requirement of 777(h) that industrial users and consumer organizations be provided an opportunity to participate in Commission antidumping and countervailing duty investigations.

Five comments addressed proposed § 207.9. Cement Alliance and Micron stated that the proposed regulation should be modified so that it expressly includes the statement, made in the NOPR preamble, that the rule does not accord interested party status on consumer organizations and industrial users. The remaining three commenters requested that the proposal be modified to expand the procedural rights accorded to consumer organizations and industrial users. Quebec stated that the rule should accord these entities the right to participate in hearings. Fair Trade Forum and Pro Trade contended that these entities should be accorded the ability to obtain information pursuant to APO.

Upon further consideration and review of the comments, the Commission has determined that proposed § 207.9 is not the most effective way to implement new section 777(h). Accordingly, the Commission will not adopt proposed § 207.9. Instead, it is adding a sentence to § 201.11(a) expressly stating that industrial users and consumer organizations are entitled to appear in antidumping and countervailing duty investigations and reviews as ''parties.'' With party status, such entities are placed on the public service list pursuant to § 201.11(d), are entitled to participate in hearings pursuant to § 201.13(c) and in conferences pursuant to § 207.15, and are entitled to make written submissions pursuant to § 207.15 and renumbered § 207.23. It is the Commission's intention to publish in its Federal Register notices instituting and scheduling antidumping and countervailing duty investigations a statement informing consumer organizations and industrial users of their right to participate as parties in an investigation.

Section 777(h) does not, however, confer ''interested party'' status on industrial users and consumer organizations. Unless such entities qualify as interested parties under section 771(9) of the Act, they do not have the rights that the Act and the Commission regulations afford to interested parties. In particular, section 777(c) of the Act authorizes the Commission to make BPI available under APO only to ''interested parties.'' Accordingly, § 201.11(a) does not accord these additional rights to industrial users and consumer organizations.

Entries of Appearance. The Commission is amending § 201.7(b) concerning the filing of entries of appearance in several respects. The first sentence of the current rule, which governs the filing of entries of appearance in investigations other than antidumping and countervailing duty investigations, has been renumbered subsection (b)(1), and revised as proposed in the NOPR.

New § 201.7(b)(2), which governs the filing of entries of appearance during the preliminary phase of antidumping and countervailing duty investigations, is adopted as proposed in the NOPR, except for a technical wording change. This section states that a party that files an entry of appearance during the preliminary phase of the investigation need not file an additional entry of appearance during the final phase of the investigation. The four commenters who addressed the proposal (Collier, Micron, Quebec, and Steel Wire Rod) each supported it.

New § 201.7(b)(3) governs the filing of entries of appearance during the final phase of antidumping and countervailing duty investigations. It makes several changes to both current practice and the proposed § 201.7(b)(4) published in the NOPR. (The proposed § 201.7(b)(3) published in the NOPR has been deleted because it pertained to the proposed issues brief/issues conference requirement which the Commission has decided not to adopt.) Under the new rule, parties that did not file entries of appearance during the preliminary phase of the investigation may file an entry of appearance in the final phase of the investigation up until 21 days before the hearing date listed in Federal Register notice that the Commission will publish pursuant to § 207.24(b). (Because the final date for filing entries of appearance will be determined by reference to the hearing date published in the Federal Register Notice of Final Phase Scheduling, subsequent rescheduling of the hearing will not serve to adjust the deadline for filing entries of appearance.)

Section 201.13

The Commission is amending § 201.13(m) to revise a cross-reference to a regulation that has been renumbered. The amendment is identical to that proposed in the NOPR.

Section 207.1

In addition to issuing the interim rule in final form, the Commission is amending § 207.1 to eliminate a reference to former section 303 of the Act.

Section 207.2

The Commission is issuing the interim rule in final form.

Section 207.3

The Commission is amending the ''24-hour rule'' governing final bracketing of BPI in § 207.3(c) to clarify that the only changes that may be made in the 24-hour BPI version of documents are changes in bracketing and deletion of BPI. The Commission received three comments concerning the matter.

Collier requested that the Commission amend the 24-hour rule so that it is applicable to all submissions in antidumping and countervailing duty investigations, rather than those submitted pursuant to an established deadline. The Commission, however, believes that a submitter not facing a deadline should have ample time to review a document's bracketing before filing it.

Stewart requested that the Commission adopt some expedited procedural mechanism to permit parties to correct typographical errors in briefs, so that a party seeking to correct such errors does not need to submit a request to the Chairman to accept an untimely-filed document. However, in the Commission's experience, the burden imposed upon a party seeking leave to correct typographical errors under the current procedure has been quite small. Stewart's other comment on this section (shared by KFTA) requested that the proposed amendment be redrafted to avoid possible unintended ambiguities. The point is well-taken, and the Commission has accordingly relocated the parenthetical clause ''including typographical changes'' in the final rule.

The Commission is also amending § 207.3(b) to change cross-references to renumbered regulations.

Section 207.4

The Commission is amending § 207.4(a) to eliminate a reference to section 303 of the Act.

Section 207.7

The Commission is making several amendments to the portions of § 207.7 addressing BPI not subject to disclosure under APO. Sections 207.7(a)(1) and 207.7(g) have been amended to use the term ''nondisclosable confidential business information'' to refer to such material. Sections 207.7(f)(2) and 207.7(g) are amended to clarify the procedures for submitting such information. Each of these provisions, with the exception of § 207.7(f), which has been further amended to use the term ''nondisclosable confidential business information,'' follows the proposals made in the NOPR.

The Commission is also amending §§ 207.7(a)(2) and 207.7(a)(4) to refer to the ''preliminary phase'' of an investigation, reflecting its decision to conduct a single, continuous investigation in antidumping and countervailing duty proceedings. In the NOPR, the Commission proposed amending § 207.7(a)(2) to authorize the filing of additional applications for a party that has entered an APO at least five days before the deadline for filing an issues brief in an investigation. Because the Commission has determined not to have parties file issues briefs in investigations, this proposed amendment to § 207.7(a)(2) has not been adopted.

In their comments, KFTA and Fair Trade Forum requested that the Commission eliminate altogether the final sentence of § 207.7(a)(2), which establishes deadlines for the filing of additional applications for a party that has entered an APO. KFTA and Fair Trade Forum perceived no justification for this provision. The Commission disagrees, both because it is necessary to finalize service lists, and because the Commission requires a comprehensive list of all those persons having access to BPI in an investigation should a violation of APO occur. Quebec requested that § 207.7(f) be amended to require service of BPI submissions on each law firm representing a party in an investigation containing attorneys subject to APO, but the Commission believes that the costs of copying and distributing BPI submissions to more than one firm should be borne by the party deciding to retain them.

Section 207.8

In its interim rulemaking, the Commission amended § 207.8 to conform with the URAA. This provision states that the Commission may use ''facts otherwise available'' whenever any party or any other person fails to respond adequately to a subpoena or refuses or is unable to produce information in a timely manner and in the form required, or otherwise significantly impedes an investigation. In the NOPR, the Commission proposed issuing this rule in final form.

Pro Trade, in its comments to the NOPR, repeated a comment it made to the interim rulemaking that the Commission amend this regulation to limit the instances in which the Commission would use ''facts otherwise available.'' However, the proposed regulation conforms to the statute as drafted, so the Commission is not modifying it, although it is deleting a reference to former section 303 of the Act.

Section 207.10

The Commission is making several technical changes to § 207.10(a). These changes, which are identical to those proposed in the NOPR, conform the section's cross-references to the provisions of the URAA and refer to the ''preliminary phase of the investigation.''

Two commenters, Pro Trade and Fair Trade Forum, requested that the Commission amend its regulations to require expressly that complete copies of petitions be filed simultaneously with Commerce and the Commission. Although the Commission believes that current law and regulations already require simultaneous filing of the ''complete'' submission with Commerce and the Commission, it agrees with these commenters that the regulations should expressly state this requirement. Accordingly, the Commission is amending § 207.10(a) to make clear that the copy of the petition filed with the Commission should contain all exhibits, appendices, attachments, and other materials that are filed with Commerce.

The Commission is also amending § 207.10(b) concerning service of antidumping and countervailing duty petitions. In the NOPR, the Commission stated that trade practitioners expressed the concern that party representatives whose APO applications have been approved prior to establishment of a service list do not gain access to the confidential version of the petition quickly enough. The Commission therefore proposed amending § 207.10(b) to obligate petitioners to serve the confidential version of the petition more rapidly than under current practice.

The seven commenters who addressed this proposal were uniformly supportive of the Commission's stated objective of facilitating more rapid service of the confidential version of the petition. One commenter, KFTA, supported the proposal as drafted. The remaining commenters requested modification of the provision in the proposal stating that service must be within ''two calendar days.'' The commenters expressed divergent views on whether requiring holiday or weekend service would be appropriate, as the proposal would require when a notification of an approved APO application is sent out on a Thursday or Friday. Fair Trade Forum contended that requiring weekend service was appropriate, because counsel generally work on weekends during a preliminary Commission investigation. It requested

that the rule be modified to require service within one calendar day. It further suggested the rule be modified to require that service be by hand when petitioners' attorney and the attorney to be served are both located in Washington, DC and by overnight mail otherwise. Pro Trade also agreed that service should be effected within one calendar day. The remaining four commenters contended requiring weekend service was not appropriate. CITBA and Schagrin contended that such a provision could require petitioners' counsel to incur additional staffing costs and could inadvertently encourage service by mail. They requested that the proposal be modified to require service within two business days. Stewart also advocated such a modification. Quebec agreed that requiring weekend or holiday service was not appropriate, but requested that the proposal be amended to require service within one business day.

After reviewing the comments, the Commission has concluded that service should be made within two calendar days. Although this may require weekend service in certain instances, the Commission does not believe that this is inappropriate in the context of the preliminary phase of an antidumping or countervailing duty investigation, where counsel typically work over weekends. The Commission does not feel that requiring service by hand is appropriate given its cost, though parties may make any such arrangements among themselves. Of course, service by hand remains an option that fulfills the service requirement if it is accomplished within two calendar days.

The Commission has, however, made several changes to its proposed amendments to § 207.10(b). First, section (b)(1) has been subdivided into two subsections. Subsection (b)(1)(A) concerns service to parties whose APO applications have been approved before the Secretary establishes a service list in an investigation. The petitioner must serve a confidential version of the petition on these parties within two calendar days of the time the Secretary notifies it of approval of an APO application. This notification will be made by facsimile where practicable.

Subsection (b)(1)(B) concerns service on parties whose APO applications are approved at or after the time the service list is established. The petitioner must serve a confidential version of the petition on these parties within two calendar days of the time the service list including that party is established.

Section 207.10(b)(2), which is the same as that published in the NOPR, concerns service of public copies of the petition. The petitioner must serve public copies of the petition to parties on the public service list within two calendar days of the time that service list is established.

Section 207.10(b)(3) requires the petitioner to file a certificate of service with the Commission after serving the petition.

Section 207.11

The Commission is amending § 207.11 concerning the content of petitions. The amended regulation imposes several new requirements. In light of the comments received, the Commission decided to adopt considerably less extensive revisions than those proposed in the NOPR.

The first sentence of current § 207.11 will be redesignated § 207.11(a). It is unchanged except for the substitution of a gender-neutral pronoun for a gender-specific one.

The second sentence of current § 207.11 will be redesignated § 207.11(b)(1). There is in addition a minor wording change.

New § 207.11(b)(2) outlines specific information that the petition must contain. Subsection (b)(2)(i) requires identification of the domestic like product(s) proposed by petitioner. No commenter objected to this requirement when it was proposed in the NOPR.

Subsection (b)(2)(ii) is a modified version of the subsection that appeared in the NOPR. As adopted by the Commission, subsection (b)(2)(ii) requires a listing of all U.S. producers of each proposed domestic like product including a street address, phone number, and contact person for each producer. No commenter objected to these requirements when they were proposed in the NOPR. The Commission eliminated the requirement proposed in the NOPR that the petition contain the estimated share of U.S. production for each producer on the grounds that this information, unlike the other information that will be required under subsection (b)(2)(ii), is not needed to facilitate distribution of producers' questionnaires, and might be overly burdensome to petitioners, as urged by Collier, Schagrin, and Stewart. Subsection (b)(2)(iii) is also a modified version of the subsection that appeared in the NOPR. As adopted by the Commission, subsection (b)(2)(iii) requires a listing of all U.S. importers of the subject merchandise, including street addresses and phone numbers for each importer. Although one commenter, Lumber Coalition, criticized this requirement as excessively burdensome, the requirement that the petitioner provide a listing of all importers has long been included in the Department of Commerce's regulations. The Commission's regulation goes beyond this by also requiring that the petition provide the phone number and address of each importer. Having such information in the petition facilitates Commission staff's ability to mail importers' questionnaires promptly after a petition is received. Because such information can be obtained from such widely-available sources as business directories and nationwide CD-ROM telephone directories, the Commission believes that this requirement will not impose a substantial burden on petitioners.

The Commission has eliminated from this subsection the requirement proposed in the NOPR that petitioner provide an estimated share of U.S. imports for each importer. As Stewart, Collier, and Micron pointed out, this requirement might have imposed an excessive burden on petitioners and could be more readily generated by Commission staff during the course of the investigation. Moreover, Commission staff does not need market share information to circulate questionnaires promptly. Subsection (b)(2)(iv) is what appeared in the NOPR as subsection (b)(2)(v). This requires identification of each product on which the petitioner requests that the Commission seek pricing information in its questionnaires. Two comments specifically addressed this provision. KFTA proposed that the provision be amended to require that petitioner explain why the products on which it requests pricing data be collected are representative. The Commission believes this is unnecessary. Schagrin asserted that the entire provision be deleted in favor of the current practice whereby Commission staff informally consults with counsel to select products on which pricing information will be collected. Schagrin is correct that Commission staff confers with petitioner's counsel prior to the filing of the petition concerning selection of products on which pricing data will be sought when petitioner's counsel makes itself available for such consultations. However, in some cases the Commission staff has had to wait until after filing of the petition to conduct such consultations. The new provision will ensure that petitioner apprises the Commission of its views on the appropriate products no later than the time the petition is filed. This will facilitate the Commission staff's ability to prepare and circulate questionnaires promptly.

Subsection (b)(2)(v) is what appeared in the NOPR as subsection (b)(2)(vii). This requires listing all sales or revenues lost by each petitioning firm during the three years preceding filing of the petition. The term ''petitioning firm,'' means producers of the proposed domestic like product(s) that are either members of any petitioning entity (such as a trade association or ad hoc coalition) or are themselves petitioners. If a labor union is the sole petitioner, this requirement is inapplicable.

The Commission received six comments specifically addressing the lost sales and revenue requirement. Micron and Stewart, which opposed the proposal, questioned why it was necessary for the Commission to require that lost sales and revenue information be provided in the petition when such data have traditionally been sought in the producer's questionnaire, and would continue to be for non-petitioning domestic producers. The Commission feels that requiring petitioning firms to include lost sales and revenue information in the petition will improve its ability to investigate these firms' lost sales and revenue information immediately after filing of the petition, instead of having to wait until questionnaire responses are received, when staff is under more severe time pressure to analyze all the other information it is accumulating.

Schagrin stated that the proposed requirement should not serve to estop petitioners from providing lost sales and revenue information during the course of the investigation. Nothing in the rule stops petitioning firms from providing lost sales and revenue information after filing of the petition when such information was not ''reasonably available'' to the firms at the time the petition was filed, and the firms can establish why such information could not be included in the petition. However, if lost sales and revenue information is ''reasonably available'' to the petitioner when the petition is filed, it must be included in the petition.

KFTA, Lumber Coalition, and Micron each addressed the question of documentation in their comments. KFTA, which supported the proposal, requested that the regulation be amended to require petitioners to provide documentation corroborating lost sale and revenue allegations. Although the Commission encourages petitioners to provide all available documentation to support their lost sales and revenue claims, it does not believe that a requirement mandating petitioners document their claims, such as the one sought by KFTA, is appropriate.

Lumber Coalition and Micron asserted that the requirement should be eliminated because producers do not keep records of sales offers in many industries. The Commission acknowledges that in some industries producers may not retain records of offers to sell. In such instances, however, lost sales and revenue information will not be ''reasonably available'' to the petitioners and the petitioners need only provide a certification to this effect pursuant to section (b)(3). That offers to sell may not be retained in some industries, however, provides an insufficient basis for eliminating the requirement for information concerning lost sales and revenue claims with respect to all industries. When a petitioning firm does have lost sales and revenue information, it should provide that information.

Quebec, which otherwise supported the proposal, suggested that the Commission use the term ''sales and revenues claimed to have been lost'' in lieu of ''sales and revenues lost.'' The Commission opts for the shorter phrase as more concise.

The provisions that appeared in the NOPR as subsections (b)(2)(iv) and (b)(2)(vi) would have required a petition to include: (1) A table providing data pertinent to the condition of the proposed domestic industry; and (2) a listing of each petitioning firm's ten largest customers for each proposed domestic like product.

The Commission received a variety of comments on these proposals. KFTA and Quebec expressed general support. Twelve commenters objected to these proposals on the grounds that (1) they were not required by the URAA; (2) they misperceived the Commission's role in conducting antidumping and countervailing duty investigations, and improperly shifted the onus of conducting the investigation to petitioners; (3) they would impose an undue burden on petitioners; (4) they were vague; and (5) the additional information the Commission would receive would not reduce its investigative workload. Two commenters, Pro Trade and Fair Trade Forum, requested that § 207.11 be amended more closely to track provisions of the World Trade Organization (WTO) Agreements on Antidumping and Countervailing Measures.

After consideration of the comments, the Commission has concluded that the benefit it would obtain from the additional information it would receive pursuant to proposed subsections (b)(2)(iv) and (b)(2)(vi) is outweighed by the burden that petitioners would face in providing this information. The Commission further acknowledges that some of the types of information that would have been required by the proposed provisions, such as financial information concerning non-petitioning domestic producers, may not be obtainable by petitioning firms from their own files or readily accessible public sources. Accordingly, the Commission has determined not to adopt subsections (b)(2)(iv) and (b)(2)(vi) proposed in the NOPR. By contrast, for those new petition requirements that have been adopted, the Commission has found, as explained above, that the benefits to the Commission's investigative process will outweigh the generally modest additional burdens that petitioners will assume in satisfying the requirements.

Additionally, the Commission does not agree with Pro Trade and Fair Trade Forum that amendments to its regulations concerning the contents of petitions are required to satisfy United States obligations under the WTO Agreements. The amendments proposed and adopted by the Commission were made for the purpose of increasing the efficiency of Commission investigations, and not on the belief amendments were required to bring Commission regulations in conformance with either the URAA or the WTO Agreements.

New section (b)(3) requires that each petition contain a certification that each item of information specified in section (b)(2) that the petitioner does not provide was not reasonably available to it. This section is unchanged from the one proposed in the NOPR. Collier, Flat-Rolled Steel, Steel Wire Rod, Stewart and UNITE commented that the ''reasonably available'' standard provides inadequate guidance to petitioners concerning what efforts they must make to obtain information. These commenters' remarks focus on proposed provisions in section (b)(2) that arguably required petitioners to provide in the petition certain types of information that were neither publicly available nor in the possession of the petitioning firms themselves. The Commission has eliminated these provisions from the final rules and believes that the ''reasonably available'' standard, which has existed for many years in the Act, provides sufficient guidance to petitioners concerning the efforts they must undertake to provide the types of information the Commission will require in petitions. Nonetheless, the Commission wishes to assure prospective petitioners that whether certain information is ''reasonably available'' will depend on the facts in each case, including who the petitioner

is and the petitioner's resources. It is not the Commission's intention to require petitioners to expend significant resources collecting information called for in these new requirements. For purposes of meeting the petition requirements, information will be considered to be ''reasonably available'' if it is readily accessible from public sources or is maintained in the regular course of business by petitioner. Thus, for example, where the petitioner is a trade association comprised of domestic producers of the proposed domestic like product, the association likely maintains records that identify those producers. Such information would be required in the petition. Where, however, the petitioner is a labor union, detailed information concerning the location of some domestic producers or their lost sales and revenues very likely might not be ''reasonably available'' to the union, and therefore would not have to be provided. Finally, a petitioner would not be expected to contact domestic producers or importers to collect the information set forth in the requirements.

New section (b)(4) is the final sentence of current § 207.11. This has not been changed from the current rules.

Pro Trade requested that the Commission amend its regulations concerning petitions to include an express provision requiring that the Commission transmit all information it has received pertinent to the question of standing to Commerce before Commerce determines whether to initiate an investigation. The Commission is currently providing to Commerce, at its request, limited information pertinent to Commerce's standing determination.

Section 207.12

The Commission is amending § 207.12 to reflect the concept that the Commission will be conducting a single, continuous investigation in antidumping and countervailing duty proceedings, as opposed to discrete ''preliminary'' and ''final'' investigations. Each of the ten commenters that addressed the matter supported the Commission's proposal that it conduct a single, continuous investigation. The Commission will continue to render discrete preliminary and final determinations in its investigation, as required by the Act.

The amendments to § 207.12, which are identical to those proposed in the NOPR, state that the Commission will commence the preliminary phase of an investigation when it receives a petition for imposition of antidumping or countervailing duties. Additionally, a reference to former section 303 of the Act has been eliminated.

Section 207.13

The Commission is amending § 207.13 has been amended to incorporate the phrase ''preliminary phase of an investigation.'' Except for the substitution of a gender-neutral noun for a gender-specific pronoun, the amendment is identical to that proposed in the NOPR.

Section 207.14

The Commission is amending § 207.14 to eliminate references to former section 303 of the Act. Additionally, the last sentence of the section has been amended to eliminate a gender-specific pronoun.

Section 207.18

The Commission is amending § 207.18 to reflect the single, continuous investigation concept. The amendments to § 207.18 are identical to those proposed in the NOPR.

The amended provision provides that when the Commission makes an affirmative preliminary determination, the Federal Register notice of that determination will further announce commencement of the final phase of the investigation. Section 207.18 has also been amended to reflect that, under the URAA, the Commission's preliminary determination may be that imports are negligible. Additionally, the final two sentences of current § 207.18 have been relocated to new § 207.21.

Section 207.20

Section 207.20 is a new provision concerning investigative activity in which the Commission will engage between the time of its preliminary determination and the time of the Commerce preliminary determination. (Current §§ 207.20 through 207.29 have been renumbered §§ 207.21 through 207.30.) New § 207.20(a) states that, if the Commission has reached an affirmative preliminary determination in an antidumping or countervailing duty investigation, the Commission's Director of Operations will continue investigative activities pending notice by Commerce of its preliminary determination. Because, as discussed below, the Commission will not be receiving an issues brief or conducting an issues conference, there will be no need for the Commission to publish a schedule of investigative activities at the time it commences its final phase investigation. Consequently, the requirement that such a schedule be published included in § 207.20(a) as it was proposed in the NOPR has been deleted from the final rule.

New § 207.20(b) states that the Director shall circulate draft questionnaires for the final phase investigation to the parties to the investigation and that any party that desires to comment on the draft questionnaires shall submit comments in writing to the Commission within a time specified by the Director. This formalizes the current practice under which Commission staff circulates draft questionnaires for the final investigation to parties for comment. Under new § 207.20(b), however, parties' comments must be filed with the Commission rather than submitted to the Office of Investigations; consequently, comments must be filed with the Secretary pursuant to section § 201.8 and be served on all parties on the service list. The purpose of this change is to increase the transparency of the investigation.

In the NOPR, the Commission proposed to amend § 207.20(b) to require that the Director of Operations circulate to the parties draft questionnaires for the final phase investigation no later than 14 days after the Commission transmits to Commerce its facts and conclusions on which the Commission's preliminary determination is based. Although the commenters who addressed the issue uniformly supported the concept of distributing draft questionnaires before Commerce issues its preliminary determination, they expressed disparate views on when the drafts should be circulated and whether the Commission should formalize the comment process. KFTA proposed that Commission staff be provided at least 40 days after transmittal of the preliminary phase investigation opinion to draft final phase questionnaires; Flat-Rolled Steel suggested that the questionnaires be circulated six weeks before the Commerce preliminary determination. CITBA, Collier, and Schagrin supported retaining current practice with respect to questionnaire comments. By contrast, Fair Trade Forum, Pro Trade, and Stewart advocated that the Commission adopt more formalized procedures for the comment process, but opposed any provision precluding parties from subsequently making data collection requests not asserted in their comments on the questionnaires.

The Commission has decided not to issue a regulation specifying the time at which draft final phase questionnaires will be circulated to the parties. It has concluded that the scheduling of circulation of draft questionnaires is best handled as an internal matter on an

investigation-by-investigation basis. The Commission does anticipate, however, that draft questionnaires will be circulated several weeks before the Commerce preliminary determination and that parties will be afforded adequate time for comment.

The Commission further believes that the more formalized comment procedures that are contemplated by § 207.20(b) will improve the investigative process by ensuring that comment procedures are the same for each investigation and that each party's comments on the questionnaires are seen by the Commission and by all other parties. The Commission expects that the parties will use the comment process to make data collection requests to the Commission for the final phase of an investigation. At the time the draft questionnaire will be circulated, the parties should be able to identify the data they desire the Commission to generate during the final phase of the investigation. This is particularly true with respect to issues such as domestic like product and cumulation on which the parties typically will have asserted detailed arguments, and will have obtained considerable data, during the preliminary phase of the investigation. Consequently, parties should make data collection requests in their questionnaire comments rather than later in the investigation. It is often impracticable to satisfy new data collection requests made during the later stages of a final phase investigation, given the need to collect, verify, and analyze data, release data under APO, and receive comments from the parties concerning data before the record closes.

The Commission has not included in rule 207.20 the proposals made in the NOPR for an issues brief and issues conference. Comments concerning these proposals were almost uniformly negative. One commenter, KFTA, limited its remarks to opposing the proposed provision precluding a party from subsequently raising issues not asserted in the issues brief. The remaining 14 commenters to address the issues brief and issues conference proposal, representing both petitioner and respondent interests, opposed the proposals outright. These commenters complained that the proposed issues brief and issues conference were unlikely either to narrow issues or simplify the Commission's investigation but that they would impose considerable burdens on parties appearing before the Commission. After review of the comments, the Commission agrees that the burdens that would be imposed by the proposed issues brief and issues conference likely outweigh the benefits these additional procedures would confer on the investigative process. Moreover, as noted earlier, identification of issues and data collection needs may be accomplished through draft questionnaire comments.

Section 207.21

New § 207.21, which largely follows current § 207.20, concerns the Final Phase Notice of Scheduling that the Commission will issue upon receipt of an affirmative preliminary determination by Commerce. Section 207.21(a) is identical to current § 207.20(a), except that references to former section 303 of the Act have been deleted.

Section 207.21(b) states that the Commission will publish in the Federal Register a Final Phase Notice of Scheduling at the time it receives notice of a Commerce affirmative preliminary determination, or of a Commerce affirmative final determination in an investigation where the Commerce preliminary determination was negative. The Final Phase Notice of Scheduling will contain the same information that the Commission currently provides in the notices of institution of final investigations that it publishes in the Federal Register.

Sections 207.21 (c) and (d) carry forward provisions codified in current § 207.18. New § 207.21(d) is the last sentence of § 207.21(c) as it was proposed in the NOPR; there has been no change in wording.

Section 207.23

New § 207.23, concerning prehearing briefs, contains several technical amendments from current § 207.22. These amendments add a reference to the final phase Notice of Scheduling and delete a reference to former section 303 of the Act.

In the NOPR, the Commission proposed amending § 207.23 to impose a 50-page limit on prehearing briefs. The Commission received 14 comments on this proposal, none of which supported the proposal as drafted. All commenters said a 50-page limit was insufficient. Several commenters suggested longer page limits; several stated that page limits should be higher in multiple-country investigations than in single-country investigations; several said the Commission should continue not to impose any page limits on prehearing briefs.

The Commission's proposal to impose page limits on prehearing briefs was premised largely on its belief that the proposed issues brief would serve to reduce the number of arguments that would need to be addressed in the prehearing brief. Because the Commission has determined not to implement its proposal concerning issues briefs, however, it will continue its current practice of not imposing page limits on prehearing briefs. Nevertheless, the Commission encourages parties to keep their prehearing briefs as concise as possible. As stated in the NOPR, parties should not submit lengthy attachments to briefs that merely restate arguments presented in the main brief.

Section 207.24

Renumbered § 207.24 is identical to current § 207.23 except that references to former section 303 of the Act have been deleted, cross-references to renumbered regulations have been changed, and gender-specific pronouns have been modified.

Although the Commission did not propose any substantive changes to renumbered § 207.24, two commenters did request substantive amendments to this provision. Stewart proposed that the third sentence of subsection (b), limiting presentation at the hearing to a summary of the information and arguments presented in the prehearing briefs, and information not available at the time the prehearing brief is filed, be stricken. Because the Commission believes that the prehearing brief should be a party's principal vehicle for asserting its arguments, and that the hearing functions primarily as a means for each party to elaborate upon the arguments it has previously asserted in writing, it will retain this provision.

Quebec requested that the regulation be amended to formalize the practice of providing petitioners and respondents equal aggregate time allocations at the hearing. Although Quebec's characterization of Commission practice is accurate, the Commission does not believe codification of the practice in the regulations is necessary. Instead, Commission staff will continue to apprise parties of this practice during the prehearing conference.

Section 207.25

Renumbered § 207.25 is identical to current § 207.24 except for two nonsubstantive changes in wording that will conform this regulation with others. The changes are identical to those proposed in the NOPR.

Section 207.29

Renumbered § 207.29 is identical to current § 207.28 except for deletion of a reference to former section 303 of the Act and a nonsubstantive change in

wording. The changes are identical to those proposed in the NOPR.

Section 207.30

Renumbered § 207.30 contains four amendments to current interim § 207.29. The first change increases from ten to 15 pages the maximum length of the final comments that parties may submit pursuant to § 207.30(b), as the Commission proposed in the NOPR.

Four commenters addressed the page limits for final comments. Cement Alliance requested that the 15-page limit be increased by five pages per additional subject country in multiple-country investigations. CITBA and Schagrin requested that the page limit be established as 15 pages per subject country. Quebec requested that the Commission retain the flexibility to increase the 15-page limit where appropriate.

The Commission reiterates that the final comments are very limited in scope, and are meant to enable the parties to address information released to the parties subsequent to the filing of the posthearing brief. Because the Commission intends to release factual information under APO very promptly after receipt, it anticipates that the parties will receive only a limited amount of information subsequent to filing of the posthearing brief, whether an investigation involves one or multiple countries. The Commission therefore concludes that the 15-page limit for final comments is justified.

The second change is the deletion of the portion of the fourth sentence of current § 207.29(b) stating that final comments that contain information disclosed prior to the filing of the posthearing brief will be disregarded. This provision is being deleted because it is not statutorily required. Moreover, the Commission believes that ascertaining precisely at what point in the investigation information discussed in the comments was released would impose excessive administrative burdens on it and its staff.

The Commission nevertheless emphasizes that the purpose of the final comments is to provide an opportunity for parties to comment on information that they have not previously had an opportunity to discuss. As previously stated, the strict page limits that are being imposed on such comments is a reflection of the limited function final comments serve. The Commission strongly discourages parties from using the final comments solely or primarily as a device to reiterate arguments that they have already made in their prehearing briefs, hearing testimony, and posthearing submissions.

New § 207.30(b) will state, as does current § 207.29(b), that final comments containing new factual information will be disregarded. This restriction is required by section 782(g) of the Act. Examples of ''new factual information'' that will not be permitted in comments submitted pursuant to § 207.30(b) include the following:

- New affidavits.
- Press clippings, unless the press clipping was submitted previously for the record.
- Information or documentation concerning commercial transactions, unless the material was submitted previously for the record.
- Updates to charts or tables previously included in the record that contain information not already in the record.

By contrast, the following examples illustrate information that would be permitted in final comments pursuant to § 207.30(b).

- Example 1. A party submits an affidavit in connection with its posthearing brief providing new information. Another party may identify in its final comments material previously submitted into the record which rebuts or corroborates the assertions in the affidavit.
- Example 2. New questionnaire responses are released to the parties after the posthearing briefs are filed. A party may include in its final comments tabular material aggregating the data in the newly-released questionnaire responses with data in previously-released questionnaire responses. A compilation of previously-released information is not ''new information'' for purposes of either section 782(g) of the Act or § 207.30(b).

The third change is the addition of a provision to new § 207.30(b) clarifying that the ''24-hour rule'' governing final bracketing of BPI pertains to comments filed under § 207.30. This change is identical to the one proposed in the NOPR.

The fourth set of changes are technical changes. These include changing cross-references to renumbered provisions, and inserting a reference to the ''final phase'' of an investigation.

The Commission has decided not to make several changes to new rule 207.30 requested by commenters. Cement Alliance, Quebec, and Steel Wire Rod requested that the Commission include in the regulation a provision requiring that the Commission release all information a specific number of days before the final comments are due. As the Commission stated in the NOPR in responding to similar comments made with respect to the interim rulemaking, the Commission does not believe that promulgating regulations requiring release of material to parties at a specific date is necessary or appropriate.

Cement Alliance, CITBA, and Schagrin asserted that the Commission should release economic and variance memoranda, as well as the staff report, to parties before final comments are due. The economic and variance memoranda are now incorporated into the staff report, the confidential version of which is released to the parties several days before the final comments are due. Flat-Rolled Steel contended that § 207.30 should be amended to require disclosure of methodologies used in compiling and analyzing questionnaire data, and in accepting or rejecting lost sales or revenue allegations. However, section 782(g) of the Act requires only disclosure of ''[i]nformation that is submitted on a timely basis to the * * * Commission during the course of a proceeding. * * *'' It does not require the Commission to disclose every compilation it makes, or methodology it uses. The Commission will continue to release to the parties in the staff report certain compilations or explanations of methodology used to compile information, and to explain its determinations in its written opinions. Accordingly, the Commission has not made the amendment requested by Flat-Rolled Steel.

Section 207.40

The Commission is issuing the interim rule in final form.

List of Subjects

19 CFR Part 201

Administrative practice and procedure, Investigations, Imports.

19 CFR Part 207

Administrative practice and procedure, Antidumping, Countervailing duties, Investigations.

For the reasons stated in the preamble, 19 CFR parts 201 and 207 are amended as set forth below:

PART 201—[AMENDED]

1. The authority citation for part 201 continues to read as follows:

Authority: Sec. 335 of the Tariff Act of 1930 (19 U.S.C. 1335) and sec. 603 of the Trade Act of 1974 (19 U.S.C. 2482), unless otherwise noted.

2. Paragraphs (a), (b), and (f) of § 201.6 are revised to read as follows:

§ 201.6 Confidential business information.

(a) *Definitions.* (1) Confidential business information is information which concerns or relates to the trade

secrets, processes, operations, style of works, or apparatus, or to the production, sales, shipments, purchases, transfers, identification of customers, inventories, or amount or source of any income, profits, losses, or expenditures of any person, firm, partnership, corporation, or other organization, or other information of commercial value, the disclosure of which is likely to have the effect of either impairing the Commission's ability to obtain such information as is necessary to perform its statutory functions, or causing substantial harm to the competitive position of the person, firm, partnership, corporation, or other organization from which the information was obtained, unless the Commission is required by law to disclose such information. The term ''confidential business information'' includes ''proprietary information'' within the meaning of section 777(b) of the Tariff Act of 1930 (19 U.S.C. 1677f(b)). Nonnumerical characterizations of numerical confidential business information (e.g., discussion of trends) will be treated as confidential business information only at the request of the submitter for good cause shown.

(2) Nondisclosable confidential business information is privileged information, classified information, or specific information (e.g., trade secrets) of a type for which there is a clear and compelling need to withhold from disclosure. Special rules for the handling of such information are set out in § 207.7 of this chapter.

(b) *Procedure for submitting business information in confidence.* (1) A request for confidential treatment of business information shall be addressed to the Secretary, United States International Trade Commission, 500 E Street SW., Washington, DC 20436, and shall indicate clearly on the envelope that it is a request for confidential treatment.

(2) In the absence of good cause shown, any request relating to material to be submitted during the course of a hearing shall be submitted at least three (3) working days prior to the commencement of such hearing.

(3) With each submission of, or offer to submit, business information which a submitter desires to be treated as confidential business information, under paragraph (a) of this section, the submitter shall provide the following, which may be disclosed to the public:

(i) A written description of the nature of the subject information;

(ii) A justification for the request for its confidential treatment;

(iii) A certification in writing under oath that substantially identical information is not available to the public;

(iv) A copy of the document

(A) Clearly marked on its cover as to the pages on which confidential information can be found;

(B) With information for which confidential treatment is requested clearly identified by means of brackets; and

(C) With information for which nondisclosable confidential treatment is requested clearly identified by means of triple brackets (except when submission of such document is withheld in accord with paragraph (b)(4) of this section); and

(v) A nonconfidential copy of the documents as required by § 201.8(d).

(4) The submission of the documents itemized in paragraph (b)(3) of this section will provide the basis for rulings on the confidentiality of submissions, including rulings on the confidentiality of submissions offered to the Commission which have not yet been placed under the possession, control, or custody of the Commission. The submitter has the option of providing the business information for which confidential treatment is sought at the time the documents itemized in paragraph (b)(3) of this section are provided or of withholding them until a ruling on their confidentiality has been issued.

* * * * *

(f) *Appeals from approval of confidential treatment.* (1) For good cause shown, the Commission may grant an appeal from an approval by the Secretary of a request for confidential treatment of a submission. Any appeal filed shall be addressed to the Chairman, United States International Trade Commission, 500 E Street, S.W., Washington, D.C. 20436, shall show that a copy thereof has been served upon the submitter, and shall clearly indicate that it is a confidential submission appeal. An appeal may be made within twenty (20) days of the approval by the Secretary of a request for confidential treatment or whenever the approval or denial has not been forthcoming within ten (10) days (excepting Saturdays, Sundays, and Federal legal holidays) of the receipt of a confidential treatment request, unless an extension notice in writing with the reasons therefor has been provided the person requesting confidential treatment.

(2) An appeal will be decided within twenty (20) days of its receipt (excepting Saturdays, Sundays, and Federal legal holidays) unless an extension notice, in writing with the reasons therefor, has been provided the person making the appeal.

* * * * *

3. Paragraphs (a) and (b) of § 201.11 are revised to read as follows:

§ 201.11 Appearance in an investigation as a party.

(a) *Who may appear as a party.* Any person may apply to appear in an investigation as a party, either in person or by representative, by filing an entry of appearance with the Secretary. Each entry of appearance shall state briefly the nature of the person's reason for participating in the investigation and state the person's intent to file briefs with the Commission regarding the subject matter of the investigation. The Secretary shall promptly determine whether the person submitting the entry of appearance has a proper reason for participating in the investigation. In any investigation conducted under part 207 of this chapter, industrial users, and if the merchandise under investigation is sold at the retail level, representative consumer organizations, will be deemed to have a proper reason for participating in the investigation. If it is found that a person does not have a proper reason for participating in the investigation, that person shall be so notified by the Secretary and shall not be entitled to appear in the investigation as a party. A person found to have a proper reason for participating in the investigation shall be permitted to appear in the investigation as a party, and acceptance of such person's entry of appearance shall be signified by the Secretary's inclusion of such person on the service list established pursuant to paragraph (d) of this section.

(b) *Time for filing.* (1) Except in the case of investigations conducted under part 207 of this chapter, each entry of appearance shall be filed with the Secretary not later than twenty-one (21) days after publication of the Commission's notice of investigation in the Federal Register.

(2) In the case of investigations conducted under subpart B of part 207 of this chapter, each entry of appearance shall be filed with the Secretary not later than seven (7) days after publication of the Commission's notice of investigation in the Federal Register. A party that files a notice of appearance during such time need not file an additional notice of appearance during the portion of the investigation conducted under subpart C of part 207 of this chapter.

(3) Notwithstanding paragraph (b)(2) of this section, a party may file an entry of appearance during the final phase of an investigation conducted under part

207 of this chapter no later than twenty-one (21) days prior to the hearing date listed in the Federal Register notice published pursuant to § 207.24(b) of this chapter.

* * * * *

4. Paragraph (m) of § 201.13 is revised to read as follows:

§ 201.13 Conduct of nonadjudicative hearings.

* * * * *

(m) *Closed sessions.* (1) Upon a request filed by a party to the investigation no later than seven (7) days prior to the date of the hearing (or three (3) days prior to the date of a conference conducted under § 207.15 of this chapter) that

(i) Identifies the subjects to be discussed;

(ii) Specifies the amount of time requested; and

(iii) Justifies the need for a closed session with respect to each subject to be discussed, the Commission (or the Director, as defined in § 207.2(c) of this chapter, for a conference under § 207.15 of this chapter) may close a portion of a hearing (or conference under § 207.15 of this chapter) held in any investigation in order to allow such party to address confidential business information, as defined in § 201.6, during the course of its presentation.

(2) In addition, during each hearing held in an investigation conducted under section 202 of the Trade Act, as amended, or in an investigation under title VII of the Tariff Act as provided in § 207.24 of this chapter, following the public presentation of the petitioner(s) and that of each panel of respondents, the Commission will, if it deems it appropriate, close the hearing in order to allow Commissioners to question parties and/or their representatives concerning matters involving confidential business information.

PART 207—[AMENDED]

5. The authority citation for part 207 is revised to read as follows:

Authority: 19 U.S.C. 1336, 1671–1677n, 2482, 3513.

6. Section 207.1 is revised to read as follows:

§ 207.1 Applicability of part.

Part 207 applies to proceedings of the Commission under section 516A and title VII of the Tariff Act of 1930 (19 U.S.C. 1303, 1516A and 1671–1677n) (the Act), other than investigations under section 783 (19 U.S.C. 1677n), which will be conducted pursuant to procedures specified by the Office of the United States Trade Representative.

7. The interim rule amending § 207.2 published in the Federal Register issue of January 3, 1995 at 60 FR 18 is adopted as a final rule without change.

8. Paragraphs (b) and (c) of § 207.3 are revised to read as follows:

§ 207.3 Service, filing, and certification of documents.

* * * * *

(b) *Service.* Any party submitting a document for inclusion in the record of the investigation shall, in addition to complying with § 201.8 of this chapter, serve a copy of each such document on all other parties to the investigation in the manner prescribed in § 201.16 of this chapter. If a document is filed before the Secretary's issuance of the service list provided for in § 201.11 of this chapter or the administrative protective order list provided for in § 207.7, the document need not be accompanied by a certificate of service, but the document shall be served on all appropriate parties within two (2) days of the issuance of the service list or the administrative protective order list and a certificate of service shall then be filed. Notwithstanding § 201.16 of this chapter, petitions, briefs, and testimony filed by parties pursuant to §§ 207.10, 207.15, 207.23, 207.24, and 207.25 shall be served by hand or, if served by mail, by overnight mail or its equivalent. Failure to comply with the requirements of this rule may result in removal from status as a party to the investigation. The Commission shall make available to all parties to the investigation a copy of each document, except transcripts of conferences and hearings, business proprietary information, privileged information, and information required to be served under this section, placed in the record of the investigation by the Commission.

(c) *Filing.* Documents to be filed with the Commission must comply with applicable rules, including § 201.8 of this chapter. If the Commission establishes a deadline for the filing of a document, and the submitter includes business proprietary information in the document, the submitter is to file and, if the submitter is a party, serve the business proprietary version of the document on the deadline and may file and serve the nonbusiness proprietary version of the document no later than one business day after the deadline for filing the document. The business proprietary version shall enclose all business proprietary information in brackets and have the following warning marked on every page: ''Bracketing of BPI not final for one business day after date of filing.'' The bracketing becomes final one business day after the date of filing of the document, *i.e.*, at the same time as the nonbusiness proprietary version of the document is due to be filed. Until the bracketing becomes final, recipients of the document may not divulge any part of the contents of the document to anyone not subject to the administrative protective order issued in the investigation. If the submitter discovers it has failed to bracket correctly, the submitter may file a corrected version or portion of the business proprietary document at the same time as the nonbusiness proprietary version is filed. No changes, including typographical changes, to the document other than bracketing and deletion of business proprietary information are permitted after the deadline unless an extension of time is granted to file an amended document pursuant to § 201.14(b)(2) of this chapter. Failure to comply with this paragraph may result in the striking from the record of all or a portion of a submitter's document.

9. Paragraph (a) of § 207.4 is revised to read as follows:

§ 207.4 The record.

(a) *Maintenance of the record.* The Secretary shall maintain the record of each investigation conducted by the Commission pursuant to title VII of the Act. The record shall be maintained contemporaneously with each actual filing in the record. It shall be divided into public and nonpublic sections. The Secretary shall also maintain a contemporaneous index of all materials filed in the record. All material properly filed with the Secretary shall be placed in the record. The Commission need not consider in its determinations or include in the record any material that is not filed with the Secretary. All material which is placed in the record shall be maintained in the public record, with the exception of material which is privileged, or which is business proprietary information submitted in accordance with § 201.6 of this chapter. Privileged and business proprietary material shall be maintained in the nonpublic record.

* * * * *

10. Paragraphs (a), (f)(2), (f)(3), and (g) of § 207.7 are revised to read as follows:

§ 207.7 Limited disclosure of certain business proprietary information under administrative protective order.

(a)(1) *Disclosure.* Upon receipt of a timely application filed by an authorized applicant, as defined in paragraph (a)(3) of this section, which describes in general terms the information requested, and sets forth the reasons for the request (*e.g.*, all business

proprietary information properly disclosed pursuant to this section for the purpose of representing an interested party in investigations pending before the Commission), the Secretary shall make available all business proprietary information contained in Commission memoranda and reports and in written submissions filed with the Commission at any time during the investigation (except nondisclosable confidential business information) to the authorized applicant under an administrative protective order described in paragraph (b) of this section. The term ''business proprietary information'' has the same meaning as the term ''confidential business information'' as defined in § 201.6 of this chapter.

(2) *Application.* An application under paragraph (a)(1) of this section must be made by an authorized applicant on a form adopted by the Secretary or a photocopy thereof. An application on behalf of a petitioner, a respondent, or another party must be made no later than the time that entries of appearance are due pursuant to § 201.11 of this chapter. In the event that two or more authorized applicants represent one interested party who is a party to the investigation, the authorized applicants must select one of their number to be lead authorized applicant. The lead authorized applicant's application must be filed no later than the time that entries of appearance are due. Provided that the application is accepted, the lead authorized applicant shall be served with business proprietary information pursuant to paragraph (f) of this section. The other authorized applicants representing the same party may file their applications after the deadline for entries of appearance but at least five (5) days before the deadline for filing posthearing briefs in the investigation, or the deadline for filing briefs in the preliminary phase of an investigation, and shall not be served with business proprietary information.

(3) *Authorized applicant.* (i) Only an authorized applicant may file an application under this subsection. An authorized applicant is:

(A) An attorney for an interested party which is a party to the investigation;

(B) A consultant or expert under the direction and control of a person under paragraph (a)(3)(i)(A) of this section;

(C) A consultant or expert who appears regularly before the Commission and who represents an interested party which is a party to the investigation; or

(D) A representative of an interested party which is a party to the investigation, if such interested party is not represented by counsel.

(ii) In addition, an authorized applicant must not be involved in competitive decisionmaking for an interested party which is a party to the investigation. Involvement in ''competitive decisionmaking'' includes past, present, or likely future activities, associations, and relationships with an interested party which is a party to the investigation that involve the prospective authorized applicant's advice or participation in any of such party's decisions made in light of similar or corresponding information about a competitor (pricing, product design, etc.).

(4) *Forms and determinations.* (i) The Secretary may adopt, from time to time, forms for submitting requests for disclosure pursuant to an administrative protective order incorporating the terms of this rule. The Secretary shall determine whether the requirements for release of information under this rule have been satisfied. This determination shall be made concerning specific business proprietary information as expeditiously as possible but in no event later than fourteen (14) days from the filing of the information, or seven (7) days in the preliminary phase of an investigation, except if the submitter of the information objects to its release or the information is unusually voluminous or complex, in which case the determination shall be made within thirty (30) days from the filing of the information, or ten (10) days in the preliminary phase of an investigation. The Secretary shall establish a list of parties whose applications have been granted. The Secretary's determination shall be final for purposes of review by the U.S. Court of International Trade under section 777(c)(2) of the Act.

(ii) Should the Secretary determine pursuant to this section that materials sought to be protected from public disclosure by a person do not constitute business proprietary information or were not required to be served under paragraph (f) of this section, then the Secretary shall, upon request, issue an order on behalf of the Commission requiring the return of all copies of such materials served in accordance with paragraph (f) of this section.

(iii) The Secretary shall release business proprietary information only to an authorized applicant whose application has been accepted and who presents the application along with adequate personal identification; or a person described in paragraph (b)(1)(iv) of this section who presents a copy of the statement referred to in that paragraph along with adequate personal identification.

(iv) An authorized applicant granted access to business proprietary information in the preliminary phase of an investigation may, subject to paragraph (c) of this section, retain such business proprietary information during any final phase of that investigation, provided that the authorized applicant has not lost his authorized applicant status (*e.g.,* by terminating his representation of an interested party who is a party). When retaining business proprietary information pursuant to this paragraph, the authorized applicant need not file a new application in the final phase of the investigation.

* * * * *

(f) *Service.* * * *

(2) If a party's request under paragraph (g) of this section is granted, the Secretary shall accept the nondisclosable confidential business information into the record. The party shall serve the submission containing such information in accordance with the requirements of § 207.3(b) and paragraph (f)(1) of this section, with the information redacted from the copies served.

(3) The Secretary shall not accept for filing into the record of an investigation submissions filed without a proper certificate of service. Failure to comply with paragraph (f) of this section may result in denial of party status and such sanctions as the Commission deems appropriate. Business proprietary information in submissions must be dealt with as required by § 207.3(c).

(g) *Exemption from disclosure.*—(1) *In general.* Any person may request exemption from the disclosure of business proprietary information under administrative protective order, whether the person desires to include such information in a petition filed under § 207.10, or any other submission to the Commission during the course of an investigation. Such a request shall only be granted if the Secretary finds that such information is nondisclosable confidential business information as defined in § 201.6(a)(2) of this chapter. The request will be granted or denied not later than thirty (30) days (ten (10) days in a preliminary phase investigation) after the date on which the request is filed.

(2) *Request for exemption.* A request for exemption from disclosure must be filed with the Secretary in writing with the reasons therefor. At the same time as the request is filed, one copy of the business proprietary information in question must be lodged with the

Secretary solely for the purpose of obtaining a determination as to the request. The business proprietary information for which exemption from disclosure is sought shall remain the property of the requester, and shall not become or be incorporated into any agency record until such time as the request is granted. A request should, when possible, be filed two business days prior to the deadline, if any, for filing the document in which the information for which exemption from disclosure is sought is proposed to be included. If the request is denied, the copy of the information lodged with the Secretary shall promptly be returned to the requester. Such a request shall only be granted if the Secretary finds that such information is privileged information, classified information, or specific information of a type for which there is a clear and compelling need to withhold from disclosure. The Secretary shall promptly notify the requester as to whether the request has been approved or denied.

(3) *Procedure if request is approved.* If the request is approved, the person shall file three versions of the submission containing the nondisclosable confidential business information in question. One version shall contain all business proprietary information, bracketed in accordance with § 201.6 of this chapter and § 207.3. The other two versions shall conform to and be filed in accordance with the requirements of § 201.6 of this chapter and § 207.3, except that the specific information as to which exemption from disclosure was granted shall be redacted from the submission.

(4) *Procedure if request is denied.* If the request is denied, the copy of the information lodged with the Secretary shall promptly be returned to the requester. The requester may file the submission in question without that information, in accordance with the requirements of § 207.3.

11. Section 207.8 is revised to read as follows:

§ 207.8 Questionnaires to have the force of subpoenas; subpoena enforcement.

Any questionnaire issued by the Commission in connection with any investigation under title VII of the Act may be issued as a subpoena and subscribed by a Commissioner, after which it shall have the force and effect of a subpoena authorized by the Commission. Whenever any party or any other person fails to respond adequately to such a subpoena or whenever a party or any other person refuses or is unable to produce information requested in a timely manner and in the form required, or otherwise significantly impedes an investigation, the Commission may:

(a) Use the facts otherwise available in making its determination;

(b) Seek judicial enforcement of the subpoena pursuant to 19 U.S.C. 1333;

(c) Make inferences adverse to such person's position, if such person is an interested party that has failed to cooperate by not acting to the best of its ability to comply with a request for information; and

(d) Take such other actions as necessary to obtain needed information.

12. Section 207.10 is revised to read as follows:

§ 207.10 Filing of petition with the Commission.

(a) *Filing of the petition.* Any interested party who files a petition with the administering authority pursuant to section 702(b) or section 732(b) of the Act in a case in which a Commission determination under title VII of the Act is required, shall file copies of the petition, including all exhibits, appendices, and attachments thereto, pursuant to § 201.8 of this chapter, with the Secretary on the same day the petition is filed with the administering authority. If the petition complies with the provisions of § 207.11, it shall be deemed to be properly filed on the date on which the requisite number of copies of the petition is received by the Secretary. The Secretary shall notify the administering authority of that date. Notwithstanding § 201.11 of this chapter, a petitioner need not file an entry of appearance in the investigation instituted upon the filing of its petition, which shall be deemed an entry of appearance.

(b) *Service of the petition.* (1)(i) The Secretary shall promptly notify a petitioner when, before the establishment of a service list under § 207.7(a)(4), he or she approves an application under § 207.7(a). When practicable, this notification shall be made by facsimile transmission. A copy of the petition including all business proprietary information shall then be served by petitioner on those approved applicants in accord with § 207.3(b) within two (2) calendar days of the time notification is made by the Secretary.

(ii) The petitioner shall serve persons enumerated on the list established by the Secretary pursuant to § 207.7(a)(4) that have not been served pursuant to paragraph (b)(1)(i) of this section within two (2) calendar days of the establishment of the Secretary's list.

(2) A copy of the petition omitting business proprietary information shall be served by petitioner on those persons enumerated on the list established by the Secretary pursuant to § 201.11(d) of this chapter within two (2) calendar days of the establishment of the Secretary's list.

(3) Service of the petition shall be attested by filing a certificate of service with the Commission.

(c) *Amendments and withdrawals; critical circumstances.* (1) Any amendment or withdrawal of a petition shall be filed on the same day with both the Secretary and the administering authority, without regard to whether the requester seeks action only by one agency.

(2) When not made in the petition, any allegations of critical circumstances under section 703 or section 733 of the Act shall be made in an amendment to the petition and shall be filed as early as possible. Critical circumstances allegations, whether made in the petition or in an amendment thereto, shall contain information reasonably available to petitioner concerning the factors enumerated in sections 705(b)(4)(A) and 735(b)(4)(A) of the Act.

13. Section 207.11 is revised to read as follows:

§ 207.11 Contents of petition.

(a) The petition shall be signed by the petitioner or its duly authorized officer, attorney, or agent, and shall set forth the name, address, and telephone number of the petitioner and any such officer, attorney, or agent, and the names of all representatives of petitioner who will appear in the investigation.

(b)(1) The petition shall allege the elements necessary for the imposition of a duty under section 701(a) or section 731(a) of the Act and contain information reasonably available to the petitioner supporting the allegations.

(2) The petition shall also include the following specific information, to the extent reasonably available to the petitioner:

(i) Identification of the domestic like product(s) proposed by petitioner;

(ii) A listing of all U.S. producers of the proposed domestic like product(s), including a street address, phone number, and contact person(s) for each producer;

(iii) A listing of all U.S. importers of the subject merchandise, including street addresses and phone numbers for each importer;

(iv) Identification of each product on which the petitioner requests the Commission to seek pricing information in its questionnaires; and

(v) A listing of all sales or revenues lost by each petitioning firm by reason of the subject merchandise during the

three years preceding filing of the petition.

(3) The petition shall contain a certification that each item of information specified in paragraph (b)(2) of this section that the petition does not include was not reasonably available to the petitioner.

(4) Petitioners are also advised to refer to the administering authority's regulations concerning the contents of petitions.

14. Section 207.12 is revised to read as follows:

§ 207.12 Notice of preliminary phase of investigation.

Upon receipt by the Commission of a petition under § 207.10 or receipt of notice that the administering authority has commenced an investigation under section 702(a) or section 732(a) of the Act, the Director shall, as soon as practicable after consultation with the administering authority, institute an investigation and commence the preliminary phase of the investigation under section 703(a) or section 733(a) of the Act and shall publish a notice to that effect in the Federal Register.

15. Section 207.13 is revised to read as follows:

§ 207.13 Cooperation with administering authority; preliminary phase of investigation.

Subsequent to institution of an investigation pursuant to section 207.12, the Director shall conduct such investigation as the Director deems appropriate. Information adduced in the investigation shall be placed on the record. The Director shall cooperate with the administering authority in its determination of the sufficiency of a petition and in its decision whether to permit any proposed amendment to a petition. Notwithstanding §§ 201.11(c) and 201.14(b) of this chapter, late filings in the preliminary phase of an investigation shall be referred to the Director, who shall determine whether to accept such filing for good cause shown by the person making the filing.

16. Section 207.14 is revised to read as follows:

§ 207.14 Negative petition determination.

Upon receipt by the Commission of notice from the administering authority under section 702(d) or section 732(d) of the Act that the administering authority has made a negative petition determination under section 702(c)(3) or section 732(c)(3) of the Act, the investigation begun pursuant to § 207.12 shall terminate. All persons who have received requests for information from the Director shall be notified of the termination.

17. Section 207.18 is revised to read as follows:

§ 207.18 Notice of preliminary determination.

Whenever the Commission makes a preliminary determination, the Secretary shall serve copies of the determination and a public version of the staff report on the petitioner, other parties to the investigation, and the administering authority. The Secretary shall publish a notice of such determination in the Federal Register. If the Commission's determination is negative, or that imports are negligible, the investigation shall be terminated. If the Commission's determination is affirmative, the notice shall announce commencement of the final phase of the investigation.

§§ 207.20 through 207.29 [Redesignated as §§ 207.21 through 207.30]

18. Sections 207.20 through 207.29 are redesignated as follows:

Old section	New section
207.20	207.21
207.21	207.22
207.22	207.23
207.23	207.24
207.24	207.25
207.25	207.26
207.26	207.27
207.27	207.28
207.28	207.29
207.29	207.30

19. A new § 207.20 is added to read as follows:

§ 207.20 Investigative activity following preliminary determination.

(a) If the Commission's preliminary determination is affirmative, the Director shall continue investigative activities pending notice by the administering authority of its preliminary determination under section 703(b) or section 733(b) of the Act.

(b) The Director shall circulate draft questionnaires for the final phase of an investigation to parties to the investigation for comment. Any party desiring to comment on draft questionnaires shall submit such comments in writing to the Commission within a time specified by the Director.

20. Redesignated § 207.21 is revised to read as follows:

§ 207.21 Final phase notice of scheduling.

(a) Notice from the administering authority of an affirmative preliminary determination under section 703(b) or section 733(b) of the Act and notice from the administering authority of an affirmative final determination under section 705(a) or section 735(a) of the Act shall be deemed to occur on the date on which the transmittal letter of such determination is received by the Secretary from the administering authority or the date on which notice of such determination is published in the Federal Register, whichever shall first occur.

(b) Upon receipt of notice from the administering authority of an affirmative preliminary determination under section 703(b) or section 733(b) of the Act or, if the administering authority's preliminary determination is negative, notice of an affirmative final determination under section 705(a) or section 735(a) of the Act, the Commission shall publish in the Federal Register a Final Phase Notice of Scheduling.

(c) If the administering authority's preliminary determination is negative, the Director shall continue such investigative activities as the Director deems appropriate pending a final determination by the administering authority under section 705(a) or section 735(a) of the Act.

(d) Upon receipt by the Commission of notice from the administering authority of its final negative determination under section 705(a) or section 735(a) of the Act, the corresponding Commission investigation shall be terminated.

21. Redesignated § 207.23 is revised to read as follows:

§ 207.23 Prehearing brief.

Each party who is an interested party shall submit to the Commission, no later than four (4) business days prior to the date of the hearing specified in the notice of scheduling, a prehearing brief. Prehearing briefs shall be signed and shall include a table of contents. The prehearing brief should present a party's case concisely and shall, to the extent possible, refer to the record and include information and arguments which the party believes relevant to the subject matter of the Commission's determination under section 705(b) or section 735(b) of the Act. Any person not an interested party may submit a brief written statement of information pertinent to the investigation within the time specified for filing of prehearing briefs.

22. Redesignated § 207.24 is revised to read as follows:

§ 207.24 Hearing.

(a) *In general.* The Commission shall hold a hearing concerning an investigation before making a final

determination under section 705(b) or section 735(b) of the Act.

(b) *Procedures.* Any hearing shall be conducted after notice published in the Federal Register. The hearing shall not be subject to the provisions of 5 U.S.C. subchapter II, chapter 5, or to 5 U.S.C. 702. Each party shall limit its presentation at the hearing to a summary of the information and arguments contained in its prehearing brief, an analysis of the information and arguments contained in the prehearing briefs described in § 207.23, and information not available at the time its prehearing brief was filed. Unless a portion of the hearing is closed, presentations at the hearing shall not include business proprietary information. Notwithstanding § 201.13(f) of this chapter, in connection with its presentation a party may file witness testimony with the Secretary no later than three (3) business days before the hearing. In the case of testimony to be presented at a closed session held in response to a request under § 207.24(d), confidential and non-confidential versions shall be filed in accordance with § 207.3. Any person not a party may make a brief oral statement of information pertinent to the investigation.

(c) *Hearing Transcripts*—(1) *In general.* A verbatim transcript shall be made of all hearings or conferences held in connection with Commission investigations conducted under this part.

(2) *Revision of transcripts.* Within ten (10) days of the completion of a hearing, but in any event at least one (1) day prior to the date for disclosure of information set pursuant to § 207.30(a), any person who testified at the hearing may submit proposed revisions to the transcript of his or her testimony to the Secretary. No substantive revisions shall be permitted. If in the judgment of the Secretary a proposed revision does not alter the substance of the testimony in question, the Secretary shall incorporate the revision into a revised transcript.

(d) *Closed sessions.* Upon a request filed by a party to the investigation no later than seven (7) days prior to the date of the hearing that identifies the subjects to be discussed, specifies the amount of time requested, and justifies the need for a closed session with respect to each subject to be discussed, the Commission may close a portion of a hearing to persons not authorized under § 207.7 to have access to business proprietary information in order to allow such party to address business proprietary information during the course of its presentation. In addition, during each hearing held in an investigation conducted under section 705(b) or section 735(b) of the Act, following the public presentation of the petitioner(s) and that of each panel of respondents, the Commission will, if it deems it appropriate, close the hearing to persons not authorized under section 207.7 to have access to business proprietary information in order to allow Commissioners to question parties and/or their representatives concerning matters involving business proprietary information.

23. Redesignated § 207.25 is revised to read as follows:

§ 207.25 Posthearing briefs.

Any party may file a posthearing brief concerning the information adduced at or after the hearing with the Secretary within a time specified in the notice of scheduling or by the presiding official at the hearing. No such posthearing brief shall exceed fifteen (15) pages of textual material, double spaced and single sided, on stationery measuring 8½ × 11 inches. In addition, the presiding official may permit persons to file answers to questions or requests made by the Commission at the hearing within a specified time. The Secretary shall not accept for filing posthearing briefs or answers which do not comply with this section.

24. Redesignated § 207.29 is revised to read as follows:

§ 207.29 Publication of notice of determination.

Whenever the Commission makes a final determination, the Secretary shall serve copies of the determination and the nonbusiness proprietary version of the final staff report on the petitioner, other parties to the investigation, and the administering authority. The Secretary shall publish notice of such determination in the Federal Register.

25. Redesignated §207.30 is revised to read as follows:

§ 207.30 Comment on information.

(a) In any final phase of an investigation under section 705 or section 735 of the Act, the Commission shall specify a date on which it will disclose to all parties to the investigation all information it has obtained on which the parties have not previously had an opportunity to comment. Any such information that is business proprietary information will be released to persons authorized to obtain such information pursuant to § 207.7. The date on which disclosure is made will occur after the filing of posthearing briefs pursuant to §207.25.

(b) The parties shall have an opportunity to file comments on any information disclosed to them after they have filed their posthearing brief pursuant to § 207.25. Comments shall only concern such information, and shall not exceed 15 pages of textual material, double spaced and single-sided, on stationery measuring 8½ × 11 inches. A comment may address the accuracy, reliability, or probative value of such information by reference to information elsewhere in the record, in which case the comment shall identify where in the record such information is found. Comments containing new factual information shall be disregarded. The date on which such comments must be filed will be specified by the Commission when it specifies the time that information will be disclosed pursuant to paragraph (a) of this section. The record shall close on the date such comments are due, except with respect to investigations subject to the provisions of section 771(7)(G)(iii) of the Act, and with respect to changes in bracketing of business proprietary information in the comments permitted by § 207.3(c).

26. The interim rule amending § 207.40 published in the Federal Register issue of January 3, 1995 at 60 FR 18 is adopted as a final rule without change.

Issued: July 15, 1996.

By order of the Commission.

Donna R. Koehnke,

Secretary.

[FR Doc. 96–18334 Filed 7–19–96; 8:45 am]

BILLING CODE 7020–02–P

ENVIRONMENTAL PROTECTION AGENCY

40 CFR Parts 52 and 81

[LA–34–1–7300a, FRL–5531–4]

Approval and Promulgation of Implementation Plans and Designation of Areas for Air Quality Planning Purposes; State of Louisiana; Correction of Classification; Approval of the Maintenance Plan; Redesignation of Pointe Coupee Parish to Attainment for Ozone

AGENCY: Environmental Protection Agency (EPA).

ACTION: Direct final rule.

SUMMARY: This document announces the Administrator's decision to remove Pointe Coupee Parish (Pointe Coupee), Louisiana, from the Baton Rouge serious ozone nonattainment area, to reclassify Pointe Coupee from serious to marginal, and to redesignate Pointe Coupee to attainment for ozone. Pointe Coupee

was classified as a serious ozone nonattainment area by the EPA on November 6, 1991 (56 FR 56694). However, the EPA has determined that the strategy used in including Pointe Coupee as part of the Baton Rouge serious ozone nonattainment area was incorrect. Pursuant to section 110(k)(6) of the Clean Air Act as amended in 1990 (the Act), which allows the EPA to correct its actions, the EPA is today granting the State's request to correct the classification of Pointe Coupee.

In addition to approving this correction of Pointe Coupee's classification, the EPA is today approving a request from the State of Louisiana to redesignate Pointe Coupee to attainment for ozone. On December 20, 1995, the State of Louisiana submitted a maintenance plan and request to redesignate the Pointe Coupee Parish ozone nonattainment area to attainment. Under the Act, nonattainment areas may be redesignated to attainment if sufficient data are available to warrant the redesignation and the area meets the other redesignation requirements. In this action, the EPA is approving Louisiana's redesignation request and maintenance plan because it meets the maintenance plan and redesignation requirements set forth in the Act, and the EPA is approving the 1993 base year emissions inventory. The approved maintenance plan will become a federally enforceable part of the State Implementation Plan (SIP) for Louisiana.

DATES: This action is effective on September 20, 1996, unless notice is postmarked by August 21, 1996 that someone wishes to submit adverse or critical comments. If the effective date is delayed, timely notice will be published in the Federal Register (*FR*).

ADDRESSES: Comments should be mailed to Thomas H. Diggs, Chief, Air Planning Section (6PD–L), EPA Region 6, 1445 Ross Avenue, Dallas, Texas 75202–2733. Copies of the State's petition and other information relevant to this action are available for inspection during normal hours at the following locations:

Environmental Protection Agency, Region 6, Air Planning Section (6PD–L), 1445 Ross Avenue, Suite 700, Dallas, Texas 75202–2733

Air and Radiation Docket and Information Center, Environmental Protection Agency, 401 M Street, S.W., Washington, D.C. 20460

Louisiana Department of Environmental Quality, Office of Air Quality, 7290 Bluebonnet Boulevard, Baton Rouge, Louisiana 70810

Anyone wishing to review this petition at the EPA office is asked to contact the person below to schedule an appointment 24 hours in advance.

FOR FURTHER INFORMATION CONTACT: Lt. Mick Cote, Air Planning Section (6PD–L), U.S. Environmental Protection Agency, Region 6, 1445 Ross Avenue, Dallas, Texas 75202–2733, telephone (214) 665–7219.

SUPPLEMENTARY INFORMATION:

Background

Prior to the 1990 amendments to the Act, the EPA identified and designated nonattainment areas with respect to the National Ambient Air Quality Standards (NAAQS). For such areas, States submitted SIPs to control emissions and achieve attainment of the NAAQS. Pointe Coupee was originally designated as nonattainment for ozone on March 3, 1978. The SIP for Pointe Coupee was first adopted in the early 1980's.

Pointe Coupee Parish was a rural ozone nonattainment planning area prior to 1990. The parish is contiguous to the Baton Rouge Consolidated Metropolitan Statistical Area (CMSA). The ozone design value for Pointe Coupee for the years 1988 through 1990 was 0.127 parts per million, which would have classified the parish as a marginal ozone nonattainment area under the Act.

Following the 1990 amendments to the Act, the Louisiana Department of Environmental Quality (LDEQ), in conjunction with other State planning agencies, developed the boundaries for the Baton Rouge ozone nonattainment area. Pointe Coupee was contiguous to the Baton Rouge CMSA, and had two large nitrogen oxides (NO_X) sources, Big Cajun I and II power plants. It was concluded that the presence of these two large NO_X sources would contribute significantly to the ozone levels in the Baton Rouge CMSA. Pointe Coupee was subsequently classified as serious by operation of law and included as part of the Baton Rouge serious ozone nonattainment area pursuant to sections 107(d) and 181(a) of the Act. Further citations will refer to the Act unless otherwise specified. *See* 56 *FR* 56694 (November 6, 1991).

The Clean Air Act, as amended in 1977, required areas that were designated nonattainment based on a failure to meet the ozone NAAQS to develop SIPs with sufficient control measures to expeditiously attain and maintain the standard. Pointe Coupee was designated under section 107 of the 1977 Clean Air Act as nonattainment with respect to the ozone NAAQS on March 3, 1978 (40 CFR 81.319). The most recent revision to the ozone SIP occurred on May 5, 1994, when the EPA approved a SIP revision for the State of Louisiana to correct certain enforceability deficiencies in its volatile organic compounds (VOC) rules (59 *FR* 23164). For purposes of redesignations, the State of Louisiana has an approved ozone SIP for Pointe Coupee.

The LDEQ has collected ambient monitoring data since 1991 that show no violations of the ozone NAAQS of 0.12 parts per million. The LDEQ has developed a maintenance plan for Point Coupee, and solicited public comment. Subsequently, the LDEQ submitted a request, through the Governor's office, to redesignate this parish to attainment with respect to the ozone NAAQS. This maintenance plan and redesignation request for Pointe Coupee was submitted to the EPA on December 20, 1995.

Correction of Error Under Section 110(k)(6)

Section 110(k)(6) provides whenever the Administrator determines that the Administrator's action approving, disapproving, or promulgating any plan or plan revision (or part thereof), area designation, redesignation, classification, or reclassification was in error, the Administrator may in the same manner as the approval, disapproval, or promulgation revise such action as appropriate without requiring any further submission from the State. Such determination and the basis thereof shall be provided to the State and public. The EPA interprets this provision to authorize the Agency to make corrections to a promulgation when it is shown to the EPA's satisfaction that an error occurred in failing to consider or inappropriately considering information available to the EPA at the time of the promulgation, or the information made available at the time of promulgation is subsequently demonstrated to have been clearly inadequate.

Ground level ozone formation involves a photochemical reaction between certain precursor chemicals when specific meteorological conditions are present. Reactions between VOCs, NO_X, and to a much lesser degree, carbon monoxide (CO), form ground level ozone. The EPA's initial action in classifying Pointe Coupee was based on the belief that NO_X emissions from Pointe Coupee would significantly impact ozone levels in the Baton Rouge CMSA, and including the parish in the Baton Rouge nonattainment area would assist in controlling future ozone levels. That information was subsequently demonstrated to have been

inappropriately considered. The EPA has since determined, through a recent Urban Airshed Modeling (UAM) demonstration, that NO_X reductions are not beneficial to attainment in the Baton Rouge CMSA, and therefore contradicts the LDEQ's and the EPA's original reason for the inclusion of Pointe Coupee in the Baton Rouge planning area.

In addition, Pointe Coupee's design value in the 1988–1990 timeframe was 0.127 ppm, which would have lead the EPA to classify the area ''marginal''. Pointe Coupee is not part of the Baton Rouge CMSA, and it is a rural parish. For these reasons, the EPA has determined that the basis for including Pointe Coupee as part of the Baton Rouge serious ozone nonattainment area was incorrect. Therefore, the EPA believes it is appropriate to correct the EPA's initial decision by removing Pointe Coupee Parish from the Baton Rouge serious ozone nonattainment area and subsequently change the classification of Pointe Coupee Parish from serious to marginal. Please see the technical support document (TSD) in the official docket for the detailed UAM analysis.

Redesignation to Attainment

Evaluation Criteria

The 1990 Amendments revised section 107(d)(3)(E) to provide five specific requirements that an area must meet in order to be redesignated from nonattainment to attainment: (1) The area must have attained the applicable NAAQS; (2) the area must meet all applicable requirements under section 110 and part D; (3) the area must have a fully approved SIP under section 110(k); (4) the air quality improvement must be permanent and enforceable; and, (5) the area must have a fully approved maintenance plan pursuant to section 175A. Section 107(d)(3)(D) allows a Governor to initiate the redesignation process for an area to apply for attainment status. Please see the TSD for a detailed discussion of these requirements.

(1) Attainment of the NAAQS for Ozone

Attainment of the ozone NAAQS is determined based on the expected number of exceedances in a calendar year. The method for determining attainment of the ozone NAAQS is contained in 40 CFR 50.9 and appendix H to that section. The simplest method by which expected exceedances are calculated is by averaging actual exceedances at each monitoring site over a consecutive three year period. An area is in attainment of the standard if this average results in expected exceedances for each monitoring site of 1.0, or less, per calendar year. When a valid daily maximum hourly average value is not available for each required monitoring day during the year, the missing days must be accounted for when estimating exceedances for the year. Appendix H provides the formula used to estimate the expected number of exceedances for each year.

The State of Louisiana's request is based on an analysis of quality-assured ozone air quality data which is relevant to both the maintenance plan and to the redesignation request. The data come from the State and Local Air Monitoring Station network. This request is based on ambient air ozone monitoring data collected for more than three consecutive years in the area. The New Roads monitoring site in Pointe Coupee has collected ozone periodically since 1976, and continuously since 1988. The data collected since 1991 clearly show an expected exceedance rate of less than 1. The redesignation request and maintenance plan are based on ambient air quality data collected between 1991 and 1995. Please see the TSD for the detailed air quality monitoring data.

In addition to the demonstration discussed above, the EPA required completion of air network monitoring requirements set forth in 40 CFR part 58. This included a quality assurance plan revision and a monitoring network review to determine the adequacy of the ozone monitoring network. The LDEQ fulfilled these requirements to complete documentation for the air quality demonstration. The LDEQ has also committed to continue monitoring in Pointe Coupee in accordance with 40 CFR part 58.

In summary, the EPA believes that the data submitted by the LDEQ provides an adequate demonstration that Pointe Coupee attained the ozone NAAQS. Moreover, the monitoring data continue to show attainment to date.

(2) Section 110 Requirements and Part D Requirements

For purposes of redesignation, to meet the requirement that the SIP contain all applicable requirements under the Act, the EPA has reviewed the SIP to ensure that it contains all measures that were due under the Act prior to or at the time the State submitted its redesignation request, as set forth in policy. The EPA interprets section 107(d)(3)(E)(v) to mean that, for a redesignation request to be approved, the State must have met all requirements that applied to the subject area prior to or at the same time as the submission of a complete redesignation request. In this case, the date of submission of a complete redesignation request is December 20, 1995.

Requirements of the Act that come due subsequently continue to be applicable to the area at later dates (see section 175A(c)) and, if redesignation of any of the areas is disapproved, the State remains obligated to fulfill those requirements. These requirements are discussed in the following the EPA documents: ''Procedures for Processing Requests to Redesignate Areas to Attainment,'' John Calcagni, Director, Air Quality Management Division, September 4, 1992; ''State Implementation Plan (SIP) Actions Submitted in Response to Clean Air Act (the Act) Deadlines,'' John Calcagni, Director, Air Quality Management Division, October 28, 1992; and ''State Implementation Plan (SIP) Requirements for Areas Submitting Requests for Redesignation to Attainment of the Ozone and Carbon Monoxide (CO) National Ambient Air Quality Standards (NAAQS) on or after November 15, 1992,'' Michael H. Shapiro, Acting Assistant Administrator, September 17, 1993.

The EPA has analyzed the Louisiana SIP and determined that it is consistent with the requirements of amended section 110(a)(2). The SIP contains enforceable emission limitations; requires monitoring, compiling, and analyzing ambient air quality data; requires preconstruction review of new major stationary sources and major modifications to existing ones; provides for adequate funding, staff, and associated resources necessary to implement its requirements; and requires stationary source emissions monitoring and reporting. For purposes of redesignation, the Pointe Coupee SIP was reviewed to ensure that all requirements of section 110(a)(2), containing general SIP elements, were satisfied. As noted above, the EPA believes all marginal ozone nonattainment area requirements have been met for Pointe Coupee.

Part D Requirements. Before Pointe Coupee can be redesignated to attainment, it must have fulfilled the applicable requirements of part D. Under part D, an area's classification determines the requirements to which it is subject. Subpart 1 of part D sets forth the basic nonattainment requirements applicable to all nonattainment areas. Subpart 2 of part D establishes additional requirements for nonattainment areas classified under Table 1 of section 181(a). As described in the General Preamble for the Implementation of Title 1, specific requirements of subpart 2 may override subpart 1's general provisions (57 *FR*

13501 (April 16, 1992)). With this action, Pointe Coupee is now subject to the *marginal* requirements of section 182(a) rather than section 182(c). Therefore, in order to be redesignated, the State must meet the applicable requirements of subpart 1 of part D-specifically sections 172(c) and 176, as well as the applicable requirements of subpart 2 of part D.

Subpart 1 of Part D—Section 172(c) Requirements. Under section 172(b), the Administrator established that States containing nonattainment areas shall submit a plan or plan revision meeting the applicable requirements of section 172(c) no later than three years after an area is designated as nonattainment, unless the EPA establishes an earlier date.

Section 172(c) sets forth general requirements applicable to all nonattainment areas. Under section 172(b), the section 172(c) requirements are applicable as determined by the Administrator, but no later than three years after an area has been designated as nonattainment under the Act. Furthermore, as noted above, some of these section 172(c) requirements are superseded by more specific requirements in subpart 2 of part D. Those sections which have been superseded can be found in the subpart 2 discussion. In the case of Pointe Coupee, the State has satisfied all of the section 172(c) requirements.

As discussed under the section 110(k)(6) requirements above, Pointe Coupee has been part of a larger serious ozone nonattainment area. Serious ozone nonattainment areas have an attainment date of November 15, 1999. However, since this action classifies Pointe Coupee as marginal, the area now has an attainment date of November 15, 1993. Based on the monitoring data collected between 1991 and 1995, the EPA agrees with the State that Pointe Coupee attained the ozone standard by this earlier date.

The section 172(c)(1) non-Reasonably Available Control Technology (RACT) control requirements have been met through satisfaction of the section 182(a)(2)(A) requirements. The EPA has determined that the section 172(c)(2) reasonable further progress requirement does not apply for this redesignation request, since air quality data shows that Pointe Coupee has already attained the ozone standard. The section 172(c)(3) emissions inventory requirements will be satisfied by the approval of the 1993 attainment year inventory requirements of the maintenance plan under section 175A. The section 172(c)(4) requirement to identify and quantify emission increases is intended to be an alternative to the offsets requirement of section 173(a), and is not a prerequisite to redesignation. Moreover, once the area is redesignated to attainment, these provisions will not apply since the Prevention of Significant Deterioration requirements of part C will become effective.

As for the section 172(c)(5) New Source Review (NSR) requirement, the EPA has determined that areas being redesignated need not comply with the NSR requirement prior to redesignation provided that the area demonstrates maintenance of the standard without part D NSR in effect. *See*, memorandum from Mary Nichols, Assistant Administrator for Air and Radiation, dated October 14, 1994, entitled Part D New Source Review (part D NSR) Requirements for Areas Requesting Redesignation to Attainment. The rationale for this view is described fully in that memorandum, and is based on the EPA's authority to establish *de minimis* exceptions to statutory requirements. *See, Alabama Power Co.* v. *Costle,* 636 F. 2d 323, 360–61 (D.C. Cir. 1979).

Section 172(c)(6) requires that other control measures be included as necessary to provide for attainment and maintenance of the ozone standard. Since attainment has been reached in Pointe Coupee, no additional measures are needed for attainment. Any additional measures required to ensure maintenance of the ozone standard are included in the contingency plan submitted with the redesignation request. Section 172(c)(7) requires that the nonattainment plan meet the applicable provision of section 110(a)(2). As discussed above under the section 110(a)(2) requirements, the SIP contains such measures and has met the requirements of section 110(a)(2). Section 172(c)(8) allows the State to use equivalent techniques for modeling, inventorying, or other planning activities unless the EPA determines that the techniques are less effective. This allowance will continue to apply to the requirements of the maintenance plan. The section 172(c)(9) requirements for contingency measures are directed at ensuring reasonable further progress and attainment by the attainment date. These requirements do not apply to Pointe Coupee, since the area has attained the ozone standard. Furthermore, section 175A for maintenance plans provides specific requirements for contingency measures that effectively supersede the requirements of this section.

Section 176(c) requires States to revise their SIPs to establish criteria and procedures to ensure that Federal actions, before they are taken, conform to the air quality planning goals in the applicable State SIP. The EPA believes it is reasonable to interpret the conformity requirements as not being applicable requirements for purposes of evaluating this redesignation request under section 107(d). The rationale for this is based on a combination of two factors.

First, the requirement to submit SIP revisions to comply with the conformity provisions of the Act continues to apply to areas after redesignation to attainment. Second, the EPA's federal conformity rules require the performance of conformity analyses in the absence of state-adopted rules. For a complete description of the EPA's national policy for the applicability of conformity requirements to redesignation requests, please see the December 7, 1995 Federal Register at 60 *FR* 62748.

Finally, for purposes of redesignation, the Pointe Coupee SIP was reviewed to ensure that all requirements of section 110(a)(2), containing general SIP elements, were satisfied. As noted above, the EPA believes the SIP satisfies all of those requirements.

Subpart 2 of Part D—Section 182(a) Requirements. The Act was amended on November 15, 1990, Public Law 101–549, 104 Stat. 2399, codified at 42 U.S.C. 7401–7671q. The EPA was required to classify ozone nonattainment areas according to the severity of their problem. As discussed previously, Pointe Coupee was designated as a serious ozone nonattainment. *See* 40 CFR 81.319. Because of this classification, Pointe Coupee originally had to meet the more stringent section 182(c) requirements. The EPA has analyzed the SIP and determined that it is consistent with the requirements of amended section 182. Below is a summary of how the area has met the requirements of section 182(a) for marginal areas.

Emissions Inventory. Section 182(a)(1) required an inventory of actual emissions from all sources, as described in section 172(c)(3) by November 15, 1992. On November 16, 1992, the LDEQ submitted an emission inventory for Pointe Coupee as part of the Baton Rouge 1990 base year submission. The EPA approved this 1990 base year inventory on March 15, 1995.

Reasonably Available Control Technology. To be redesignated, all SIP revisions required by section 182(a)(2)(A) concerning RACT requirements must have been submitted to the EPA and fully approved (59 FR

23166). Louisiana has met all RACT corrections requirements.

Vehicle Inspection and Maintenance (I/M). Section 182(a)(2)(B) requires that States correct deficiencies in any existing I/M program. There is not, however, any requirement under this section to implement a new I/M program. Pointe Coupee did not have an I/M program in place prior to 1990, so no outstanding I/M issues exist. It should be noted that an I/M program has been adopted by the State in this parish, but the EPA has not taken action to approve it.

Emissions Inventory Update and Statements. Section 182(a)(3)(A) required a periodic update of the area's emission inventory under paragraph (1) within three years of its submittal. The State included a 1993 inventory with the December 20, 1995 submittal of its maintenance plan and redesignation request for Pointe Coupee. Section 182(a)(3)(B) required a SIP submission by November 15, 1992, to require stationary sources of NO_X and VOCs to provide statements of actual emissions. Louisiana submitted an annual emissions statement SIP revision on March 3, 1993. This revision was approved in the Federal Register on January 6, 1995 at 60 *FR* 2014.

General Offset Requirement. Section 182(a)(4) required the State to develop VOC emission offset requirements in the ratio of 1.1 to 1. As discussed previously under the section 172(c)(5) NSR requirements, the EPA has determined that areas being redesignated need not comply with the NSR requirement prior to redesignation. Section 172(c)(5)(c) of the NSR requirements specifies the requirements for offsets.

(3) Fully Approved SIP Under Section 110(k)

Based on the approval of provisions under the pre-amended Act and the EPA's prior approval of SIP revisions under the 1990 Amendments, the EPA has determined that Pointe Coupee has a fully approved SIP under section 110(k), which also meets the applicable requirements of section 110 and part D as discussed above.

(4) Improvement in Air Quality Due to Permanent and Enforceable Measures

The EPA approved the Louisiana SIP control strategy for Pointe Coupee, satisfied that the rules and the emission reductions achieved as a result of those rules were enforceable. The control measures to which the emission reductions are attributed are VOC RACT regulations, the Federal Motor Vehicle Control Program (FMVCP), and lower Reid Vapor Pressure (RVP) for gasoline. The FMVCP and RVP reduced VOC emissions from motor vehicles by 47 percent from 1990 to 1996. In addition, the State permits program, the Prevention of Significant Deterioration permits program, and the Federal Operating Permits program will help counteract future emissions growth.

In association with its emission inventory discussed below, the State of Louisiana has demonstrated that actual enforceable emission reductions are responsible for the air quality improvement and that the VOC emissions in the base year are not artificially low due to local economic downturn. The EPA finds that the combination of existing the EPA-approved state and federal measures contribute to the permanence and enforceability of reduction in ambient ozone levels that have allowed the area to attain the NAAQS.

(5) Fully Approved Maintenance Plan Under Section 175A

Section 175A sets forth the elements of a maintenance plan for areas seeking redesignation from nonattainment to attainment. The plan must demonstrate continued attainment of the applicable NAAQS for at least ten years after the Administrator approves a redesignation to attainment. Eight years after the redesignation, the State must submit a revised maintenance plan which demonstrates attainment for the ten years following the initial ten-year period. To provide for the possibility of future NAAQS violations, the maintenance plan must contain contingency measures, with a schedule for implementation, adequate to assure prompt correction of any air quality problems. In this document, the EPA is approving the State of Louisiana's maintenance plan for Pointe Coupee because the EPA finds that Louisiana's submittal meets the requirements of section 175A.

A. Emissions Inventory-Attainment Year Inventory

On December 20, 1995, the State of Louisiana submitted comprehensive inventories of VOCs, NO_X, and CO emissions from Pointe Coupee. The inventories include area, stationary, and mobile sources using 1993 as the base year for calculations to demonstrate maintenance. The 1993 inventory is considered representative of attainment conditions because the NAAQS was not violated during 1993 and was one of the three years (1991–1993) upon which the attainment demonstration was based. The EPA is approving the 1993 base year inventory in this document.

The State submittal contains the detailed inventory data and summaries by county and source category. The UAM Emission Processing System 2.0 Utility Program Bureau of Economic Analysis Factors was used to generate the growth projections for the emissions inventory. These factors were applied to the 1993 inventory to reflect the expected emission levels through 2006.

The emission projections show an increase above the base year levels for NO_X. Because of this increase, the LDEQ was required to provide justification that Pointe Coupee could maintain its air quality in light of this projected NO_X increase. The LDEQ submitted a UAM demonstration with the redesignation request. The UAM demonstration was used to demonstrate the impact of NO_X emission increases on ozone formation. The UAM analysis showed that the projected future mix of emissions will not cause a violation of the NAAQS. The EPA UAM guidance documents were used in developing model inputs.

The model was run using 1992 and 1993 meteorological conditions and monitored ozone concentration data. This UAM demonstration illustrates that the projected NO_X levels during the maintenance period (1993–2006) will not adversely affect ozone levels in Pointe Coupee. Please see the TSD for details regarding the emission inventory and projections, as well as a copy of the UAM modeling results.

The following table is a summary of the revised average peak ozone season weekday VOC and NO_X emissions for the major anthropogenic source categories for the 1993 attainment year inventory.

SUMMARY OF VOC EMISSION PROJECTIONS FOR POINTE COUPEE PARISH IN TONS PER DAY

	1993	1999	2006
Point Source VOC ...	2.50	2.52	2.50
Area Source VOC ...	0.94	0.98	0.88
Nonroad Source VOC	1.55	1.70	1.51
Onroad Source VOC	1.63	1.21	1.18
Total VOC	6.62	6.41	6.07

SUMMARY OF NO_X Emission Projections for Pointe Coupee Parish in Tons Per Day

	1993	1999	2006
Point Source NO_X ...	60.91	64.76	67.19
Area Source NO_X	0.03	0.03	0.03
Nonroad Source NO_X	3.40	4.01	3.33
Onroad Source NO_X	2.56	2.19	2.12

SUMMARY OF NO_X Emission Projections for Pointe Coupee Parish in Tons Per Day—Continued

	1993	1999	2006
Total NO_X	66.40	70.99	72.67

B. Continued Attainment

Continued attainment of the ozone NAAQS in Pointe Coupee will depend, in part, on the Federal and State control measures discussed previously. However, the ambient air monitoring site will remain active at its present location during the maintenance period. These data will be quality assured and submitted to the Aerometric Information and Retrieval System on a monthly basis. A monitored violation of the ozone NAAQS will provide the basis for triggering measures contained in the contingency plans. Additionally, as discussed above, during year eight of the maintenance period, the LDEQ is required to submit a revised plan to provide for maintenance of the ozone standard in Pointe Coupee for the next ten years.

C. Contingency Plan

Section 175A requires that a maintenance plan include contingency provisions, as necessary, to promptly correct any violation of the NAAQS that occurs after redesignation of the area to attainment. The contingency plan should clearly identify the measures to be adopted, a schedule and procedure for adoption and implementation, and a specific time limit for action by the State. The State should also identify specific triggers which will be used to determine when the measures need to be implemented.

The LDEQ has selected new Control Techniques Guidelines or Alternative Control Technology rule implementation and NO_X RACT as contingency measures in Pointe Coupee. If at any time during the maintenance period Pointe Coupee records a violation of the ozone NAAQS, the LDEQ will evaluate the potential source(s) of that violation and promulgate either VOC or NO_X RACT rules as appropriate for the affected source categories. The LDEQ will adopt rules within 9 months of the violation, and affected sources must be in compliance with the these rules within 2 years of the violation. These contingency measures and schedules for implementation satisfy the requirements of section 175A(d).

D. Subsequent Maintenance Plan Revisions

In accordance with section 175A(b), the State has agreed to submit a revised maintenance SIP eight years after the area is redesignated to attainment. Such revised SIP will provide for maintenance for an additional ten years.

Final Action

In today's action, the EPA is correcting the error made by removing Pointe Coupee from the Baton Rouge serious ozone nonattainment area, establishing Pointe Coupee Parish as a separate planning area in accordance with section 110(k)(6). In addition, the EPA is correcting the classification of the area from serious to marginal for ozone. In accordance with sections 107(d)(2)(B), and 110(k)(6), the correction action portion of this document is a final publication of the classification of Pointe Coupee Parish to a marginal ozone nonattainment area, and is not subject to the notice and comment provisions of sections 553 through 557 of title 5 of the Administrative Procedures Act.

The EPA has evaluated the State's redesignation request for Pointe Coupee for consistency with the Act, the EPA regulations, and policy. The EPA believes that the redesignation request and monitoring data demonstrate that this area has attained the ozone standard. In addition, the EPA has determined that the redesignation request meets the requirements and policy set forth in the General Preamble and policy memorandum discussed in this document for area redesignations, and today is approving Louisiana's redesignation request for Pointe Coupee Parish.

The EPA is publishing this action without prior proposal because the EPA views this as a noncontroversial amendment and anticipates no adverse comments. However, in a separate document in this Federal Register publication, the EPA is proposing to approve the SIP revision should adverse or critical comments be filed. This action will be effective September 20, 1996, unless adverse or critical comments concerning the redesignation portion of this document are postmarked by August 21, 1996. If the EPA receives such comments, this action will be withdrawn before the effective date by publishing a subsequent document that will withdraw the final action. All public comments received concerning the redesignation portion of this document will then be addressed in a subsequent final rule based on this action serving as a proposed rule. The EPA will not institute a second comment period on this action. Any parties interested in commenting on this action should do so at this time. If no such comments are received on this action, the public is advised that this action will be effective September 20, 1996.

The EPA has reviewed this redesignation request for conformance with the provisions of the Act and has determined that this action conforms to those requirements.

Regulatory Process

Under the Regulatory Flexibility Act, 5 U.S.C. 600 *et seq.*, the EPA must prepare a regulatory flexibility analysis assessing the impact of any proposed or final rule on small entities (5 U.S.C. 603 and 604). Alternatively, under 5 U.S.C. 605(b), the EPA may certify that the rule will not have a significant impact on a substantial number of small entities. *See* 46 FR 8709. Small entities include small businesses, small not-for-profit enterprises, and governmental entities with jurisdiction over populations of less than 50,000.

SIP approvals under section 110 and subchapter I, part D do not create any new requirements, but simply approve requirements that the State is already imposing. Therefore, because the Federal SIP-approval does not impose any new requirements, I certify that it does not have a significant impact on small entities. Moreover, due to the nature of the Federal-State relationship under the Act, preparation of a regulatory flexibility analysis would constitute Federal inquiry into the economic reasonableness of State action. The Act forbids the EPA from basing its actions concerning SIPs on such grounds. *Union Electric Co.* v. *U.S. E.P.A.*, 427 U.S. 246, 256–66 (S.Ct. 1976); 42 U.S.C. section 7410(a)(2). The Office of Management and Budget has exempted this action from review under Executive Order 12866.

Under section 307(b)(1), petitions for judicial review of this action must be filed in the United States Court of Appeals for the appropriate circuit by September 20, 1996. Filing a petition for reconsideration of this final rule by the Administrator does not affect the finality of this rule for purposes of judicial review; nor does it extend the time within which a petition for judicial review may be filed, or postpone the effectiveness of this rule. This action may not be challenged later in proceedings to enforce its requirements (see section 307(b)(2)).

Nothing in this action shall be construed as permitting, allowing, or establishing a precedent for any future

request for a revision to any SIP. Each request for revision to the SIP shall be considered separately in light of specific technical, economic, and environmental factors and in relation to relevant statutory and regulatory requirements.

Unfunded Mandates

Under sections 202, 203, and 205 of the Unfunded Mandates Reform Act of 1995, signed into law on March 22, 1995, the EPA must undertake various actions in association with proposed or final rules that include a Federal mandate that may result in estimated costs of $100 million or more to the private sector, or to State, local, or tribal governments in the aggregate.

Through submission of this SIP or plan revision approved in this action, the State and any affected local or tribal governments have elected to adopt the program provided for under section 175A. The rules and commitments approved in this action may bind State, local and tribal governments to perform certain actions and also require the private sector to perform certain duties. To the extent that the rules and commitments being approved by this action will impose or lead to the imposition of any mandate upon the State, local, or tribal governments, either as the owner or operator of a source or as a regulator, or would impose or lead to the imposition of any mandate upon the private sector, the EPA's action will impose no new requirements; such sources are already subject to these requirements under State law. Accordingly, no additional costs to State, local, or tribal governments, or to the private sector, result from this action. Therefore, the EPA has determined that this final action does not include a mandate that may result in estimated costs of $100 million or more to State, local, or tribal governments in the aggregate or to the private sector.

SIP Actions Exempt From OMB Review

This action has been classified for signature by the Administrator under the procedures published in the Federal Register on January 19, 1989 (54 FR 2214–2225), as revised by a July 10, 1995, memorandum from Mary Nichols, Assistant Administrator for Air and Radiation. The Office of Management and Budget has exempted this regulatory action from Executive Order 12866 review.

Submission to Congress and the General Accounting Office

Under section 801(a)(1)(A) of the Administrative Procedure Act (APA) as amended by the Small Business Regulatory Enforcement Fairness Act of 1996, EPA submitted a report containing this rule and other required information to the U.S. Senate, the U.S. House of Representatives and the Comptroller General of the General Accounting Office prior to publication of the rule in today's Federal Register. This rule is not a ''major rule'' as defined by section 804(2) of the APA as amended.

List of Subjects

40 CFR Part 52

Environmental protection, Air pollution control, Incorporation by reference, Intergovernmental regulations, Ozone, Reporting and recordkeeping requirements, Volatile organic compounds.

40 CFR Part 81

Air pollution control, National Parks, Wilderness areas.

Dated: June 27, 1996.

Carol M. Browner,

Administrator.

40 CFR Parts 52 and 81 are amended as follows:

PART 52—[AMENDED]

1. The authority citation for part 52 continues to read as follows:

Authority: 42 U.S.C. 7401–7671q.

Subpart T—Louisiana

2. Section 52.970 is amended by adding paragraph (c)(70) to read as follows:

§ 52.970 Identification of plan.

* * * * *

(c) * * *

(70) The Louisiana Department of Environmental Quality submitted a redesignation request and maintenance plan for Pointe Coupee Parish on December 20, 1995. The redesignation request and maintenance plan meet the redesignation requirements in section 107(d)(3)(E) of the Act as amended in 1990. The redesignation meets the Federal requirements of section 182(a)(1) of the Clean Air Act as a revision to the Louisiana ozone State Implementation Plan for Pointe Coupee Parish. The EPA therefore approved the request for redesignation to attainment with respect to ozone for Pointe Coupee Parish on September 20, 1996.

(i) *Incorporation by reference.*

(A) Letter dated August 31, 1995, from Mr. Gustave Von Bodungen, P.E., Assistant Secretary, Louisiana Department of Environmental Quality, transmitting a copy of the Pointe Coupee Parish maintenance plan for the EPA's approval.

(ii) *Additional material.*

(A) Letter dated August 28, 1995, from Governor Edwin E. Edwards of Louisiana to Ms. Jane Saginaw, Regional Administrator, requesting the reclassification and redesignation of Pointe Coupee Parish to attainment for ozone.

(B) The ten year ozone maintenance plan, including emissions projections and contingency measures, submitted to the EPA as part of the Pointe Coupee Parish redesignation request on December 20, 1995.

3. Section 52.975 is amended by adding paragraph (d) to read as follows:

§ 52.975 Redesignations and maintenance plans: Ozone.

* * * * *

(d) *Approval.* The Louisiana Department of Environmental Quality submitted a redesignation request and maintenance plan for Pointe Coupee Parish on December 20, 1995. The redesignation request and maintenance plan meet the redesignation requirements in section 107(d)(3)(E) of the Act as amended in 1990. The redesignation meets the Federal requirements of section 182(a)(1) of the Clean Air Act as a revision to the Louisiana ozone State Implementation Plan for Pointe Coupee Parish. The EPA therefore approved the request for redesignation to attainment with respect to ozone for Pointe Coupee Parish on September 20, 1996.

PART 81—[AMENDED]

1. The authority citation for part 81 continues to read as follows:

Authority: 42 U.S.C. 7401–7671q.

2. In § 81.319, the ozone table is amended by revising the entries for the Baton Rouge Area and adding an entry for Pointe Coupee Area in alphabetical order to read as follows:

§ 81.319 Louisiana.

* * * * *

LOUISIANA—OZONE

Designated area	Designation		Classification	
	Date [1]	Type	Date	Type
Baton Rouge Area:				
Ascension Parish		Nonattainment		Serious.
East Baton Rouge Parish		Nonattainment		Serious.
Iberville Parish		Nonattainment		Serious.
Livingston Parish		Nonattainment		Serious.
West Baton Rouge Parish		Nonattainment		Serious.
* * *	*	*	*	*
Pointe Coupee Area:				
Pointe Coupee Parish	September 20, 1996	Attainment		

[1]This date is November 15, 1990, unless otherwise noted.

* * * * *

[FR Doc. 96–18194 Filed 7–19–96; 8:45 am]

BILLING CODE 6560–50–P

FEDERAL COMMUNICATIONS COMMISSION

47 CFR Part 73

[MM Docket No. 96–63; RM–8777]

Radio Broadcasting Services; Green River, WY

AGENCY: Federal Communications Commission.

ACTION: Final rule.

SUMMARY: The Commission, at the request of Wagonwheel Communications Corporation, allots Channel 268C at Green River, Wyoming, as the community's first local aural transmission service. *See* 61 FR 15442, March 8, 1996. Channel 268C can be allotted to Green River in compliance with the Commission's minimum distance separation requirements at city reference coordinates. The coordinates for Channel 268C at Green River are North Latitude 41–31–36 and West Longitude 109–28–06. With this action, this proceeding is terminated.

DATES: Effective August 26, 1996. The window period for filing applications will open on August 26, 1996, and close on September 26, 1996.

FOR FURTHER INFORMATION CONTACT: Sharon P. McDonald, Mass Media Bureau, (202) 418–2180.

SUPPLEMENTARY INFORMATION: This is a synopsis of the Commission's *Report and Order,* MM Docket No. 96–63, adopted July 3, 1996, and released July 12, 1996. The full text of this Commission decision is available for inspection and copying during normal business hours in the FCC Reference Center (Room 239), 1919 M Street, NW., Washington, DC. The complete text of this decision may also be purchased from the Commission's copy contractors, International Transcription Service, Inc., (202) 857–3800, 2100 M Street, NW., Suite 140, Washington, DC 20037.

List of Subjects in 47 CFR Part 73

Radio broadcasting.

Part 73 of title 47 of the Code of Federal Regulations is amended as follows:

PART 73—[AMENDED]

1. The authority citation for part 73 continues to read as follows:

Authority: Sections 303, 48 Stat., as amended, 1082; 47 U.S.C. 154, as amended.

§ 73.202 [Amended]

2. Section 73.202(b), the Table of FM Allotments under Wyoming, is amended by adding Green River, Channel 268C.

Federal Communications Commission.

John A. Karousos,

Chief, Allocations Branch, Policy and Rules Division, Mass Media Bureau.

[FR Doc. 96–18444 Filed 7–19–96; 8:45 am]

BILLING CODE 6712–01–F

47 CFR Part 73

[MM Docket No. 94–125; RM–8534, RM–8575]

Radio Broadcasting Services; Fredericksburg, Helotes and Castroville, TX

AGENCY: Federal Communications Commission.

ACTION: Final rule.

SUMMARY: This document rescinds the *Report and Order* in this proceeding. *See* 60 FR 32298, published June 21, 1995.

EFFECTIVE DATE: August 20, 1996.

FOR FURTHER INFORMATION CONTACT: Robert Hayne, Mass Media Bureau, (202) 776–1654.

SUPPLEMENTAL INFORMATION: This is a synopsis of the Commission's *Order* in MM Docket No. 94–125, adopted June 28, 1996, and released July 5, 1996. The full text of this decision is available for inspection and copying during normal business hours in the FCC Dockets Branch (Room 230), 1919 M Street, NW., Washington, DC. The complete text of this decision may also be purchased from the Commission's copy contractor, International Transcription Service, (202) 857–3800, 2100 M Street, NW., Washington, DC 20037.

List of Subjects in 47 CFR Part 73

Radio broadcasting.

Federal Communications Commission.

Bruce A. Romano,

Deputy Chief, Policy and Rules Division, Mass Media Bureau.

[FR Doc. 96–18445 Filed 7–19–96; 8:45 am]

BILLING CODE 6712–01–F

47 CFR Part 73

[MM Docket No. 93–136; RM–8161, RM–8309 & RM–8310]

Radio Broadcasting Services; Clewiston, Fort Myers Villas, Indiantown, Jupiter, Key Colony Beach, Key Largo, Marathon and Naples, FL

AGENCY: Federal Communications Commission.

ACTION: Final rule; application for review.

SUMMARY: This action dismisses an Application for Review filed by Palm Beach Radio Broadcasters, Inc., WSUV, Inc. and GGG Broadcasting, Inc. (''Joint Petitioners'') in response to a Memorandum Opinion and Order. *See* 60 FR 32120, June 20, 1995. On May 21, 1996, Joint Petitioners withdrew the

Application for Review filed in this proceeding pursuant to Section 1.420(j) of the Commission's Rules.

EFFECTIVE DATE: July 22, 1996.

FOR FURTHER INFORMATION CONTACT: Kathleen Scheuerle, Mass Media Bureau, (202) 418–2180.

SUPPLEMENTARY INFORMATION: This is a synopsis of the Commission's *Memorandum Opinion and Order*, MM Docket No. 93–136, adopted June 27, 1996, and released June 28, 1996. The full text of this Commission decision is available for inspection and copying during normal business hours in the Commission's Reference Center (Room 239), 1919 M Street, NW., Washington, DC. The complete text of this decision may also be purchased from the Commission's copy contractors, International Transcription Services, Inc., 2100 M Street, NW., Suite 140, Washington, DC 20037, (202) 857–3800.

List of Subjects in 47 CFR Part 73

Radio broadcasting.

Federal Communications Commission.

Bruce A. Romano,

Deputy Chief, Policy and Rules Division, Mass Media Bureau.

[FR Doc. 96–18446 Filed 7–19–96; 8:45 am]

BILLING CODE 6712–01–F

DEPARTMENT OF DEFENSE

48 CFR Parts 225 and 252

[DFARS Case 96–D312]

Defense Federal Acquisition Regulation Supplement; Petroleum Products From Caribbean Basin Countries

AGENCY: Department of Defense (DoD).

ACTION: Interim rule with request for comment.

SUMMARY: The Director of Defense Procurement has issued an interim rule amending the Defense Federal Acquisition Regulation Supplement (DFARS) to fully implement Section 8094 of the Fiscal Year 1994 Defense Appropriations Act (Public Law 103–139). Section 8094 requires that the Department of Defense consider all qualified bids from any eligible country under the Caribbean Basin Economic Recovery Act as if they were offers from designated countries under the Trade Agreements Act.

DATES: *Effective date:* July 22, 1996.

Comment date: Comments on the interim rule should be submitted in writing to the address shown below on or before September 20, 1996, to be considered in the formulation of the final rule.

ADDRESSES: Interested parties should submit written comments to: Defense Acquisition Regulations Council, Attn: Ms. Amy Williams, PDUSD (A&T) DP (DAR), IMD 3D139, 3062 Defense Pentagon, Washington, DC 20301–3062. Telefax number (703) 602–0350. Please cite DFARS Case 96–D312 in all correspondence related to this issue.

FOR FURTHER INFORMATION CONTACT: Ms. Amy Williams, (703) 602–0131.

SUPPLEMENTARY INFORMATION:

A. Background

This interim rule implements Section 8094 of the Fiscal Year 1994 Defense Appropriations Act (Pub. L. 103–139). This requirement was originally implemented at DFARS 225.401, 225.403(m)(4), and 225.403–70 under DFARS Case 93–D312. The final rule was published in the Federal Register on May 5, 1994 (59 FR 23169). The implementation at DFARS 225.403(m)(4) was limited to contracts awarded during fiscal year 1994. Because Section 8094 of Pub. L. 103–139 does not contain time limits, this rule removes the time limit at 225.403(m)(4). In addition, this rule amends DFARS 225.403–70 and 252.225–7007 to clarify that the definition of Caribbean Basin country end products includes petroleum and any end product derived from petroleum.

B. Regulatory Flexibility Act

This interim rule is not expected to have a significant economic impact on a substantial number of small entities within the meaning of the Regulatory Flexibility Act, 5 U.S.C. 601, et seq., because petroleum and products derived from petroleum are already subject to the Trade Agreements Act. The consideration of Caribbean Basin country offers of petroleum and products derived from petroleum is not expected to significantly affect the petroleum market in this country. Furthermore, the Trade Agreements Act and the Caribbean Basin Economic Recovery Act apply only to acquisitions exceeding $190,000 in value. An initial Regulatory Flexibility Analysis has therefore not been performed. Comments are invited from small businesses and other interested parties. Comments from small entities concerning the affected DFARS subparts will be considered in accordance with Section 610 of the Act. Such comments must be submitted separately and cite DFARS Case 96–D312 in correspondence.

C. Paperwork Reduction Act

The Paperwork Reduction Act does not apply. This interim rule does not impose any new information collection requirements which require the approval of the Office of Management and Budget under 44 U.S.C. 3501, et seq.

D. Determination to Issue an Interim Rule

A determination has been made under the authority of the Secretary of Defense that compelling reasons exist to promulgate this interim rule prior to affording the public an opportunity to comment. This action is necessary to fully implement Section 8094 of the Fiscal Year 1994 Defense Appropriations Act (Pub. L. 103–139). Comments received in response to the publication of this interim rule will be considered in formulating the final rule.

List of Subjects in 48 CFR Parts 225 and 252

Government procurement.

Michele P. Peterson,

Executive Editor, Defense Acquisition Regulations Council.

Therefore, 48 CFR Parts 225 and 252 are amended as follows:

1. The authority citation for 48 CFR Parts 225 and 252 continues to read as follows:

Authority: 41 U.S.C. 421 and 48 CFR Chapter 1.

PART 225—FOREIGN ACQUISITION

2. Section 225.403 is amended by removing paragraph (m)(4) and by adding in its place paragraph (g)(4) to read as follows:

225.403 Exceptions.

* * * * *

(g) (4) In accordance with Section 8094 of the Fiscal Year 1994 Defense Appropriations Act (Public Law 103–139), the exception for petroleum and any product derived from petroleum does not apply.

3. Section 225.403–70 is amended by revising the introductory text to read as follows:

225.403–70 Products subject to trade agreement acts.

Foreign end products subject to the Trade Agreements Act and NAFTA are those in the following Federal supply groups (FSG). If a product is not in one of the listed groups, the Trade Agreements Act and NAFTA do not apply. The definition of Caribbean Basin country end products in FAR 25.401 excludes those end products which are not eligible for duty-free treatment

under 19 U.S.C. 2703(b). However, 225.401 expands the definition of Caribbean Basin country end products to include petroleum and any product derived from petroleum. The list of products has been annotated to indicate those products which are eligible for designated and NAFTA countries, but are not presently eligible for Caribbean Basin countries.

* * * * *

PART 252—SOLICITATION PROVISIONS AND CONTRACT CLAUSES

4. Section 252.225–7007 is amended by revising the clause date to read ''(JUL 1996)''; by revising the introductory text of paragraph (a)(1)(ii); by adding the word ''and'' at the end of paragraph (a)(1)(ii)(C); by revising paragraph (a)(1)(ii)(D); and by removing paragraph (a)(1)(ii)(E). The revised text reads as follows:

252.225–7007 Trade Agreements.

* * * * *

(a)* * *

(1)* * *

(ii) Excludes products, other than petroleum and any product derived from petroleum, that are not granted duty-free treatment under the Caribbean Basin Economic Recovery Act (19 U.S.C. 2703(b)). These exclusions presently consist of—

* * * * *

(D) Watches and watch parts (including cases, bracelets, and straps) of whatever type, including, but not limited to, mechanical, quartz digital, or quartz analog, if such watches or watch parts contain any material which is the product of any country to which Harmonized Tariff Schedule column 2 rates of duty apply.

* * * * *

[FR Doc. 96–18431 Filed 7–19–96; 8:45 am]

BILLING CODE 5000–04–M

DEPARTMENT OF TRANSPORTATION

Federal Railroad Administration

49 CFR Part 225

[FRA Docket No. RAR–4, Notice No. 14]

Railroad Accident Reporting

[RIN 2130–AA58]

AGENCY: Federal Railroad Administration (FRA).

ACTION: Notice of Open Meeting.

SUMMARY: On June 18, 1996, FRA published a final rule (61 FR 30940) amending the railroad accident reporting regulations at 49 CFR Part 225. The amendments to these regulations are effective January 1, 1997. Railroads are required to use the *FRA Guide for Preparing Accidents/Incidents Reports* (*FRA Guide*) when preparing the numerous required monthly reports and forms submitted to FRA. Instructions contained in the *FRA Guide* are provided to assist railroads in meeting this obligation. Various changes and revisions to the *FRA Guide* are necessary due to the revisions of the accident reporting regulations.

FRA thus gives notice of an open meeting to discuss revisions to the *FRA Guide.* Among the primary objectives of this meeting are to develop new codes for the Railroad Injury and Illness Summary (Continuation Sheet) (Form FRA F 6180.55a); to design new record layouts for magnetic media and electronic submission of reports to FRA; and to discuss and recommend any other changes to the *FRA Guide* necessary to implement the revisions to the accident reporting regulations. FRA invited all interested parties including representatives of the Association of American Railroads (AAR) Information Exchange Forum on Uniformity in Reporting Committee, rail labor associations, trade associations, members of the public, as well as any other interested party. FRA may schedule additional meetings to the extent that interest is expressed by parties.

DATES: The meeting is scheduled to commence at 8:30 a.m. on Tuesday, July 30th and to conclude at 3:00 p.m. on Thursday, August 1st. It is anticipated that the meeting will conclude at 4:00 p.m. on Tuesday, July 30th and on Wednesday, July 31st.

ADDRESSES: The meeting will be held at the Hall of States Conference Center, 444 North Capitol Street, NW., Washington, DC 20001. The room number for the meeting will be posted in the lobby of this building. The meeting is open to the public on a first-come, first-served basis.

FOR FURTHER INFORMATION CONTACT:

Robert L. Finkelstein, Staff Director, Office of Safety Analysis, Office of Safety, FRA, 400 Seventh Street, SW., Washington, DC 20590 (telephone 202–501–4863 or 202–366–0543); or Marina C. Appleton, Trial Attorney, Office of Chief Counsel, FRA, 400 Seventh Street, SW., Washington, DC 20590 (telephone 202–366–0628).

Issued in Washington, DC., on July 17, 1996.

Donald M. Itzkoff,

Deputy Federal Railroad Administrator.

[FR Doc. 96–18698 Filed 7–19–96; 8:45 am]

BILLING CODE 4910–06–M

DEPARTMENT OF COMMERCE

National Oceanic and Atmospheric Administration

50 CFR Part 630

[I.D. 062796B]

Atlantic Swordfish Fishery; Drift Gillnet Closure Postponement

AGENCY: National Marine Fisheries Service (NMFS), National Oceanic and Atmospheric Administration (NOAA), Commerce.

ACTION: Closure postponement.

SUMMARY: NMFS postpones the closure of the drift gillnet fishery for swordfish in the Atlantic Ocean, including the Gulf of Mexico and Caribbean Sea. On July 9, 1996, NMFS announced a closure date of July 17, 1996. However, NMFS has determined that the adjusted second semiannual subquota for swordfish that may be harvested by drift gillnet will not be reached on or before July 17, 1996, as was previously determined. This closure postponement will allow vessels to continue to fish and is necessary to allow the quota to be reached.

EFFECTIVE DATE: This postponement action is effective July 17, 1996. The closure that published on July 9, 1996 at 61 FR 35971 is postponed until 2330 hours, local time, July 19, 1996, and will be in effect through 2400 hours, local time, November 30, 1996.

FOR FURTHER INFORMATION CONTACT: Ronald G. Rinaldo, 301-713- 2347.

SUPPLEMENTARY INFORMATION: The Atlantic swordfish fishery is managed under the authority of the Magnuson Fishery Conservation and Management Act (16 U.S.C. 1801 *et seq.*) and the Atlantic Tunas Convention Act (16 U.S.C. 971 *et seq.*).

The 1996 swordfish Total Allowable Catch (TAC) allows for an Atlantic swordfish drift gillnet subquota of 22.5 mt dressed weight (49,604 lb) for the January 1 to June 30 period, and a subquota of 23.45 mt dressed weight (51,698 lb) for the July 1 to November 30 period. NMFS estimates that approximately 33,183 lb (15.0 mt) were caught during the first period subquota. As required under applicable regulations, the remaining portion of the

first period subquota (16,421 lb) has been carried over to the second period, for an adjusted second period subquota of 30.9 mt dressed weight, or 68,119 lb. NMFS estimates that approximately 13,818 lb remain of the adjusted second period subquota as of this date.

Based on projected catch rates, NMFS had previously announced a closure date of July 17, 1996 (61 FR 35971). Because of Hurricane Bertha, many of the vessels were unable to fish for a number of days and the quota is not expected to be reached on or before July 17, 1996, as was previously estimated. Given the approximately 13,818 lb remains of the second period subquota and current fishery catches averaging approximately 7,000 lb per day, NMFS estimates that the quota will be reached on or before July 19, 1996. Hence, action is being taken to postpone the fishery closure to be effective 2330 hours on July 19, 1996 through 2400 hours November 30, 1996.

During this closure of the drift gillnet fishery: (1) No one aboard a vessel using or having on board a drift gillnet may fish for swordfish from the North Atlantic swordfish stock; (2) no more than two swordfish per trip may be possessed on board vessel using or having on board a drift gillnet in the North Atlantic Ocean, including the Gulf of Mexico and Caribbean Sea, north of 5° N. lat., or landed in an Atlantic, Gulf of Mexico, or Caribbean coastal state.

Classification

This action is required by 50 CFR 630.25(a) and is exempt from review under E.O. 12866.

Dated: July 17, 1996.

Richard H. Schaefer,

Director, Office of Fisheries Conservation and Management, National Marine Fisheries Service.

[FR Doc. 96–18564 Filed 7–17–96; 4:47 pm]

BILLING CODE 3510–22–F

50 CFR Part 660

[Docket No. 960614176–6176–01; I.D. 050796A]

RIN 0648–AI18

Fisheries Off West Coast States and in the Western Pacific; Correction

AGENCY: National Marine Fisheries Service (NMFS), National Oceanic and Atmospheric Administration (NOAA), Commerce.

ACTION: Correction to final rule.

SUMMARY: This document corrects an error in § 660.323 (a)(2)(ii) in the final rule concerning Fisheries Off West Coast States and in the Western Pacific, published July 2, 1996 (61 FR 34570).

EFFECTIVE DATE: July 1, 1996.

FOR FURTHER INFORMATION CONTACT: Cheri Sexton McCarty, NMFS, 301–713–2341.

SUPPLEMENTARY INFORMATION:

Background

The final rule document 96–16234 beginning on page 34570 in the issue of Tuesday, July 2, 1996, in § 660.323(a)(2)(ii), incorrectly indicates that the starting date of the regular season for nontrawl sablefish is August 6. This error needs to be corrected to ensure that the public is aware that the correct starting date of the fishery is September 1.

Correction of Publication

Accordingly, the publication on July 2, 1996, of the final rule document (I.D. 050796A), which was the subject of FR Doc. 96–16234, is corrected as follows:

§ 660.323 [Corrected]

On page 34594, in the second column, in § 660.323, paragraph (a)(2)(ii), in the first sentence, the date ''August 6'' is corrected to read ''September 1''.

Dated: July 15, 1996.

Gary Matlock,

Program Management Officer, National Marine Fisheries Service.

[FR Doc. 96–18428 Filed 7–19–96; 8:45 am]

BILLING CODE 3510–22–F

50 CFR Part 679

[Docket No. 960531152–6152–01; I.D. 042996B]

RIN 0648–AI18

Fisheries of the Exclusive Economic Zone Off Alaska; Correction

AGENCY: National Marine Fisheries Service (NMFS), National Oceanic and Atmospheric Administration (NOAA), Commerce.

ACTION: Correction to final regulations.

SUMMARY: This document contains a correction to final regulations (I.D. 042996B), which were published Wednesday, June 19, 1996 (61 FR 31228). The regulations related to consolidation of six parts in title 50 of the CFR.

EFFECTIVE DATE: July 1, 1996.

FOR FURTHER INFORMATION CONTACT: William Bellows, 301–713–2344.

SUPPLEMENTARY INFORMATION:

Background

The final regulations that are the subject of this correction consolidated several sections of regulations in parts 671, 672, 673, 675, 676, 677, and 679. The consolidation was effected as part of the President's Regulatory Reform Initiative. The final rule reorganized management measures into a more logical and cohesive order, removed duplicative and outdated provisions, and made editorial changes for readability, clarity, and achieved uniformity in regulatory language. It was not intended to make substantive changes to existing regulations.

Need for Correction

As published, the final rule contained a paragraph that was proposed in another agency rulemaking but had not yet been adopted as final. Therefore, inclusion of the paragraph in the consolidated rule would constitute a substantive change, in spite of the fact that the preamble stated that no such changes were made. The paragraph was inadvertantly placed in the rule.

Correction of Publication

Accordingly, the publication on June 19, 1996, of the final regulations (I.D. 042996B), which was the subject of FR Doc. 96–14593, is corrected as follows:

§ 679.32 [Corrected]

On page 31269, in the first column, in § 679.32, paragraph (e)(1)(vi) is removed and reserved.

Authority: 16 U.S.C. 773 *et seq.* and 1801 *et seq.*

Dated: July 15, 1996.

Gary Matlock,

Program Management Officer, National Marine Fisheries Service.

[FR Doc. 96–18429 Filed 7–19–96; 8:45 am]

BILLING CODE 3510–22–F

Proposed Rules

Federal Register
Vol. 61, No. 141
Monday, July 22, 1996

This section of the FEDERAL REGISTER contains notices to the public of the proposed issuance of rules and regulations. The purpose of these notices is to give interested persons an opportunity to participate in the rule making prior to the adoption of the final rules.

DEPARTMENT OF TRANSPORTATION

Federal Aviation Administration

14 CFR Part 25

[Docket No. NM–128; Notice No. SC–96–3–NM]

Special Conditions: deHavilland DHC–8–400 Airplane; High-Intensity Radiated Fields

AGENCY: Federal Aviation Administration, DOT.

ACTION: Notice of proposed special conditions.

SUMMARY: This notice proposes special conditions for the deHavilland DHC–8–400 airplane. This airplane will utilize new avionics/electronic systems that provide critical data to the flightcrew. The applicable regulations do not contain adequate or appropriate safety standards for the protection of these systems from the effects of high-intensity radiated fields. These proposed special conditions contain the additional safety standards that the Administrator considers necessary to establish a level of safety equivalent to that established by the existing airworthiness standards.

DATES: Comments must be received on or before September 5, 1996.

ADDRESSES: Comments on this proposal may be mailed in duplicate to: Federal Aviation Administration, Office of the Assistant Chief Counsel, Attn: Rules Docket (ANM–7), Docket No. NM–128, 1601 Lind Avenue SW., Renton, Washington, 98055–4056; or delivered in duplicate to the Office of the Assistant Chief Counsel at the above address. Comments must be marked: Docket No. NM–128. Comments may be inspected in the Rules Docket weekdays, except Federal holidays, between 7:30 a.m. and 4:00 p.m.

FOR FURTHER INFORMATION CONTACT: Phil Forde, FAA, Standardization Branch, ANM–113, Transport Airplane Directorate, Aircraft Certification Service, 1601 Lind Avenue SW., Renton, Washington, 98055–4056, telephone (206) 227–2146 or facsimile (206) 227–1149.

SUPPLEMENTARY INFORMATION:

Comments Invited

Interested persons are invited to participate in the making of these proposed special conditions by submitting such written data, views, or arguments as they may desire. Communications should identify the regulatory docket or notice number and be submitted in duplicate to the address specified above. All communications received on or before the closing date for comments will be considered by the Administrator before further rulemaking action on this proposal is taken. The proposals contained in this notice may be changed in light of the comments received. All comments received will be available, both before and after the closing date for comments, in the Rules Docket for examination by interested parties. A report summarizing each substantive public contact with FAA personnel concerning this rulemaking will be filed in the docket. Commenters wishing the FAA to acknowledge receipt of their comments submitted in response to this notice must include a self-addressed, stamped postcard on which the following statement is made: ''Comments to Docket No. NM–128.'' The postcard will be dated stamped and returned to the commenter.

Background

On January 31, 1995, the de Havilland Aircraft Company of Canada, Garratt Boulevard, Downsview, Ontario M3K1Y5, applied for an amendment to their Type Certificate No. A13NM to include their new model Dash 8 Series 400 (DHC–8–400), Model 401/402 airplane, which is a derivative of the DHC–8–300. The DHC–8–400 is a high wing, T-tail, twin engine, turbopropeller powered regional transport. Each engine will be capable of delivering 4830 shaft horsepower. The flight controls are manual, except for the tandem rudder which will be hydraulically powered. The airplane has a seating capacity of up to 78, and a maximum takeoff weight of 62,500 pounds.

Type Certification Basis

Under the provisions of 14 CFR § 21.101, deHavilland must show that the DHC–8–400 meets the applicable provisions of the regulations incorporated by reference in Type Certificate No. A13NM, or the applicable regulations in effect on the date of application for the change to the Model 300. The regulations incorporated by reference in the type certificate are commonly referred to as the ''original type certification basis.'' The regulations incorporated by reference in Type Certificate No. A13NM include part 25, as amended by Amendments 25–1 through 25–83. In addition to the applicable airworthiness regulations and special conditions, the DHC–8–400 must comply with the fuel vent and exhaust emission requirements of part 34, effective September 10, 1990, plus any amendments in effect at the time of certification; and the noise certification requirements of part 36, effective December 1, 1969, as amended by Amendment 36–1 through the amendment in effect at the time of certification. No exemptions are anticipated. The special conditions that may be developed as a result of this notice will form an additional part of the type certification basis.

If the Administrator finds that the applicable airworthiness regulations (i.e., part 25, as amended) do not contain adequate or appropriate safety standards for the DHC–8–400 because of a novel or unusual design feature, special conditions are prescribed under the provisions of § 21.16 to establish a level of safety equivalent to that established in the regulations.

Special conditions, as appropriate, are issued in accordance with § 11.49 of the FAR after public notice, as required by §§ 11.28 and 11.29(b), and become part of the type certification basis in accordance with § 21.101(b)(2).

Special conditions are initially applicable to the model for which they are issued. Should the type certificate for that model be amended later to include any other model that incorporates the same novel or unusual design feature, or should any other model already included on the same type certificate be modified to incorporate the same novel or unusual design feature, the special conditions would also apply to the other model under the provisions of § 21.101(a)(1).

Novel or Unusual Design Features

The DHC–8–400 airplane avionics enhancement will utilize electronic systems that perform critical functions,

including a digital Electronic Flight Instrument System (EFIS), attitude and heading reference systems (AHRS), and air data systems (ADS). These systems may be vulnerable to high-intensity radiated fields (HIRF) external to the airplane.

Discussion

There is no specific regulation that addresses protection requirements for electrical and electronic systems from HIRF. Increased power levels from ground based radio transmitters, and the growing use of sensitive electrical and electronic systems to command and control airplanes, have made it necessary to provide adequate protection.

To ensure that a level of safety is achieved equivalent to that intended by the regulations incorporated by reference, special conditions are needed for the DHC–8–400, which require that new technology electrical and electronic systems, such as the EFIS, AHRS and ADS, be designed and installed to preclude component damage and interruption of function due to both the direct and indirect effects of HIRF.

High-Intensity Radiated Fields

With the trend toward increased power levels from ground based transmitters, plus the advent of space and satellite communications, coupled with electronic command and control of the airplane, the immunity of critical digital avionics systems to HIRF must be established.

It is not possible to precisely define the HIRF to which the airplane will be exposed in service. There is also uncertainty concerning the effectiveness of airframe shielding for HIRF. Furthermore, coupling of electromagnetic energy to cockpit-installed equipment through the cockpit window apertures is undefined. Based on surveys and analysis of existing HIRF emitters, an adequate level of protection exists when compliance with the HIRF protection special condition is shown with either paragraphs 1 or 2 below:

1. A minimum threat of 100 volts per meter peak electric field strength from 10 KHz to 18 GHz.

a. The threat must be applied to the system elements and their associated wiring harnesses without the benefit of airframe shielding.

b. Demonstration of this level of protection is established through system tests and analysis.

2. A threat external to the airframe of the following field strengths for the frequency ranges indicated.

Frequency	Peak (V/M)	Average (V/M)
10 KHz–100 KHz	50	50
100 KHz–500 KHz	60	60
500 KHz–2000 KHz	70	70
2 MHz–30 MHz	200	200
30 MHz–100 MHz	30	30
100 MHz–200 MHz	150	33
200 MHz–400 MHz	70	70
400 MHz–700 MHz	4,020	935
700 MHz–1000 MHz	1,700	170
1 GHz–2 GHz	5,000	990
2 GHz–4 GHz	6,680	840
4 GHz–6 GHz	6,850	310
6 GHz–8 GHz	3,600	670
8 GHz–12 GHz	3,500	1,270
12 GHz–18 GHz	3,500	360
18 GHz–40 GHz	2,100	750

As discussed above, these special conditions would be applicable initially to the DHC–8–400 airplane. Should de Havilland apply at a later date for a change to the type certificate to include another incorporating the same novel or unusual design feature, the special conditions would apply to that model as well, under the provisions of § 21.101(a)(1).

Conclusion

This action affects certain design features only on the modified DHC–8–400 airplane. It is not a rule of general applicability and affects only the manufacturer who applied to the FAA for approval of these features on the airplane.

List of Subjects in 14 CFR Part 25

Aircraft, Aviation safety, Reporting and record keeping requirements.

The authority citation for these proposed special conditions is as follows:

Authority: 49 U.S.C. 106(g), 40113, 44701, 44702, 44704.

The Proposed Special Conditions

Accordingly, the Federal Aviation Administration (FAA) proposes the following special conditions as part of the type certification basis for the deHavilland DHC–8–400 series airplanes.

1. *Protection from Unwanted Effects of High-Intensity Radiated Fields (HIRF).* Each electrical and electronic system that performs critical functions must be designed and installed to ensure that the operation and operational capacity of these systems to perform critical functions are not adversely affected when the airplane is exposed to high-intensity radiated fields.

2. For the purpose of this special condition, the following definition applies:

Critical Functions. Functions whose failure would contribute to or cause a failure condition that would prevent the continued safe flight and landing of the airplane.

Issued in Renton, Washington, on July 9, 1996.

Darrell M. Pederson,

Acting Manager, Transport Airplane Directorate, Aircraft Certification Service.

[FR Doc. 96–18548 Filed 7–19–96; 8:45 am]

BILLING CODE 4910–13–M

DEPARTMENT OF COMMERCE

International Trade Administration

15 CFR Part 303

DEPARTMENT OF THE INTERIOR

Office of Territorial and International Affairs

[Docket No. 960508126–6126–01]

RIN 0625–AA46

Proposed Changes in Procedures for Insular Possessions Watch Program

AGENCIES: Import Administration, International Trade Administration, Department of Commerce; Office of Territorial and International Affairs, Department of the Interior.

ACTION: Proposed rule and request for comments.

SUMMARY: This action invites public comment on a proposal to amend the ITA regulations, which govern duty-exemption allocations and duty-refund entitlements for watch producers in the United States' insular possessions (the Virgin Islands, Guam and American Samoa) and the Northern Mariana Islands. The proposed amendments would modify procedures for completion and use of the ''Permit to Enter Watches and Watch Movements into the Customs Territory of the United States'' (Form ITA–340); make the technical changes required by the passage of the Uruguay Round Agreements Act in 1994; eliminate the mid-year report (Form ITA–321P); change the percentage creditable towards the duty-refund of wages for non-9⅕ watch and watch movement repairs and raise one of the percentages in the formula for calculating the duty-refund; revise the total quantity and respective territorial shares of insular watches and watch movements which would be allowed to enter the United States free of duty; remove reference to watches and watch movements which are only ineligible for duty-free

treatment due to value-limit reasons from the percentage of non-9⅕ wages creditable toward the duty-refund; raise the maximum value of components for watches; and make other necessary changes to consolidate and simplify the regulations.

DATES: Comments must be received on or before August 21, 1996.

ADDRESSES: Address written comments to Faye Robinson, Program Manager, Statutory Import Programs Staff, Room 4211, U.S. Department of Commerce, Washington, D.C. 20230.

FOR FURTHER INFORMATION CONTACT: Faye Robinson, (202) 482–3526, same address as above.

SUPPLEMENTARY INFORMATION: The insular possessions watch industry provision in Sec. 110 of Pub. L. No. 97–446 (96 Stat. 2331) (1983) as amended by Sec. 602 of Pub. L. No. 103–465 (108 Stat. 4991) (1994) additional U.S. Note 5 to chapter 91 of the HTS requires the Secretary of Commerce and the Secretary of the Interior, acting jointly, to establish a limit on the quantity of watches and watch movements which may be entered free of duty during each calendar year. The law also requires the Secretaries to establish the shares of this limited quantity which may be entered from the Virgin Islands, Guam, American Samoa and the Northern Mariana Islands. After the Departments have verified the data submitted on application Form ITA–334P, the producers' duty-exemption allocations are calculated from the territorial share in accordance with Section 303.14 of the regulations and each producer is issued a duty-exemption license. Section 303.7 paragraph (b) of the regulations states the procedures for the issuance of the ''Permit to Enter Watches and Watch Movements into the Customs Territory of the United States'' (''permit'' or ''shipment permit''), Form ITA–340, against the producers' duty-exemption licenses. Currently, an authorized official of the territorial government issues each shipment permit (completed from data supplied by the licensee) and certifies that the permit is issued against a valid license and that the remaining balance of the license, as shown on the permit, has been verified. Under the proposed amendment, the licensed companies would be given revised permits for completion and the licensee would have responsibility for self-certifying that the permit is issued against a valid license and that the remaining balance of the license, as shown on the permit, is correct according to company records. The licensee would also continue to certify that the watches and watch movements to be entered under the permit have been assembled in the U.S. insular possessions in compliance with the regulations of the Departments of Commerce and the Interior and the U.S. Customs Service, and that they meet all U.S. Customs Service requirements for duty-free entry under additional U.S. note 5 of chapter 91 of the Harmonized Tariff Schedule of the United States. A copy of the signed permit would then be taken or sent via facsimile, no later than the day of shipment, to the appropriate territorial government officials for recording and verification. The completed and signed permit would be filed along with the other Customs Service entry paperwork requirements unless the importer or its representative transmits the data through the Automated Broker Interface (''ABI'') system of the Customs Service. Entries made by electronic transmission would not require the submission of a permit (Form ITA–340) to Customs, but the permit information would have to be maintained by the importer or its authorized agent for the period prescribed by Customs' recordkeeping regulations, currently five years. The changes in permit procedures are being proposed to eliminate paperwork, namely, the submission of Form ITA–340 to Customs with ABI entries. Also, the proposed new procedures would allow required permit information to pass between the territorial government and the watch producers via facsimile, which would eliminate the burden of travel to and from the territorial office.

The permit currently consists of five self-carboned pages with one copy to be presented to the U.S. Customs officer at the port of entry and then forwarded to the Department of Commerce after entry number, date of entry, and port of entry have been added by the Customs officer; one copy to be retained by the licensee's broker or agent; one copy to be retained by the licensee; one copy to be retained by the territorial office; and one copy to be forwarded by the territorial office to the Department of Commerce. Under the proposed amendment, the revised permit would be a single page document which could be produced by the licensee in an approved computerized format or any other medium or format approved by the Department of Commerce. On entries made through ABI, the licensee would not need to make any copies of the original permit if the permit is sent via facsimile or other data communications system to the territorial government officials and the importer or its authorized agent (otherwise, two copies needed). For non-electronic transmission entries filed with Customs officials at the port, the original permit would continue to be a required part of the paperwork submitted to Customs to receive duty-free treatment. Customs would still forward the permit to the Department of Commerce after filling in the entry number and date of entry. The licensee, as with ABI entries, would need to make a copy of the permit for the territorial government and the importer or its authorized agent's records only if the permit is not sent via facsimile or other data communication system. The territorial government officials would continue to send a copy of each permit to the Department of Commerce. The proposed revision of the permit would not only reduce the paperwork associated with the permit, but would also eliminate the need for Customs to mail a copy of the permit to the Department of Commerce for all ABI entries.

Section 602 of Public Law 103–465 enacted on December 8, 1994 amended Public Law 97–446. The proposed rule would make the necessary technical changes to reflect the new authority for the duty-refund entitlements for the insular watch program. Changes would be made to Authority, Sec. 303.1(a), Sec 303.2((a)(1) and Sec. 303.12(c)(2).

We also propose eliminating the mid-year report (Form ITA–321P). Sec. 303.11 (Mid-year reporting requirement) of the regulations and Sec. 303.2(b)(4) (Form ITA–321P) would be removed. A major purpose of the mid-year report was to establish whether companies required more duty-exemption allocation or wished to relinquish duty-exemption that had been allocated. These purposes can be satisfied less formally and without paperwork. Even if the reporting requirement and the associated form are eliminated, companies could still request supplemental duty-free allocations or voluntarily relinquish units in accordance with Sec. 303.6(c) and (f). We also propose amending Sec. 303.6(f) in order to clarify the procedures for requesting annual supplemental allocations and relinquishing units.

We propose increasing the percentage of wages for the repair of non-9⅕ watches and watch movements creditable towards the duty-refund to a maximum of fifty percent of the firm's total creditable wages by amending Sec. 303.2(a)(13) and Sec. 303.14(c)(3). The increase is being proposed to permit producers to further diversify their operations.

Currently, the percentage of wages paid for the repair of non-9⅕ watches and watch movements and for the assembly of non-9⅕ watches and watch

movements (ineligible only due to value-limit reasons) which is creditable towards the duty-refund is twenty-five percent of the firm's other 9⅕ creditable wages. No duty-refunds have ever been issued on the basis of wages paid for the production of watches and watch movements because they exceeded regulatory value limits. Accordingly, we propose eliminating this exclusion by amending Sec. 303.2(a)(13).

Pub. L. 97–446, as amended by Pub. L. 103–465, requires the Secretary of Commerce and the Secretary of the Interior, acting jointly, to establish a limit on the quantity of watches and watch movements which may be entered free of duty during each calendar year. The law also requires the Secretaries to establish the shares of this limited quantity which may be entered from the Virgin Islands, Guam, American Samoa and the Northern Mariana Islands. Regulations on the establishment of these quantities and shares are contained in Sec. 303.3 and 303.4 of title 15, Code of Federal Regulations (15 CFR 303.3 and 303.4). The Departments propose to establish for calendar year 1997 a total quantity and respective territorial shares as shown in the following table:

Virgin Islands	3,100,000
Guam	500,000
American Samoa	500,000
Northern Mariana Islands	500,000

Compared to the total quantity established for 1994 (59 FR 8847; February 24, 1994), this amount would be a decrease of 500,000 units. The proposed Virgin Islands territorial share would be reduced by 500,000 and the shares for Guam, American Samoa and the Northern Mariana Islands would not change. The amount we propose for the Virgin Islands is more than sufficient for the anticipated needs of all the existing producers.

We also propose raising the maximum value of components for duty-free treatment of watches from $175 to $200 by amending Sec. 303.14(b)(3). This change would relax the limitation on the value of imported components that may be used in the assembly of duty-free insular watches. The proposed value levels would also help offset the effects of the declining dollar and allow the producers wider options in the kinds of watches they assemble.

The proposed changes include amending Sec. 303.14(c)(1)(iv), which sets the incremental percentage for calculating that part of the duty-refund for producers who have shipped between 600,000 and 750,000 units free of duty into the United States. Currently the value of the duty-refund is based on the producer's average creditable wages per unit shipped free of duty into the United States multiplied by a factor of 90% for the first 300,000 units and declining percentages in additional increments of 85%, 80% and 65% up to a maximum of 750,000 units. The amendment would raise the 65% increment to 75%. In recent years most producers have shipped fewer than 600,000 units. This change would add a further incentive for producers to increase shipments which would help raise territorial employment.

The following amendments are being proposed to simplify and consolidate the regulations and to eliminate redundancy:

- Remove the concluding text of § 303.6(f) which would require the publication of notices in the Federal Register to invite new entrants and would amend § 303.8(c)(2), which also related to new entrant invitations (the regulations contain a standing invitation to new entrants in § 303.14);
- Eliminate Section 303.10 (Limitations, requirements, restriction and prohibitions) and would consolidate non-duplicative language in Sec. 303.14(b);
- Amend Sec. 303.12(b)(3) by changing registered mail to registered, certified or express carrier mail;
- Amend Sec. 303.12(c)(1) by changing the reference from Sec. 303.2(b)(6) to Sec. 303.2(b)(5), due to other proposed changes affecting the numbering of provisions;
- Amend Sec. 303.14(b) by removing references to Sec. 303.10 and incorporating the non-duplicative language in Sec. 303.14(b);
- Amend Sec. 303.14(c)(2) by replacing a reference to Sec. 303.10(c)(2) with the correct reference (Sec. 303.5(c)) and by removing Sec. 303.14(c)(3) as redundant; and
- Eliminate Sections 303.10 and 303.11.

The proposed rule does not contain policies with Federalism implications sufficient to warrant preparation of a Federalism assessment under Executive Order 12612.

Regulatory Flexibility Act

In accordance with the Regulatory Flexibility Act, 5 U.S.C. 601 *et seq.*, the Assistant General Counsel for Legislation and Regulation has certified to the Chief Counsel, Small Business Administration, that the proposed rule will not have a significant economic impact on a substantial number of small entities. This is because the rulemaking is primarily to consolidate and simplify the regulations, make technical changes and reduce paperwork.

Paperwork Reduction Act

This rulemaking involves information collection activities subject to the Paperwork Reduction Act of 1980, 44 U.S.C. 3501 et seq. which are currently approved by the Office of Management and Budget under control numbers 0625–0040 and 0625–0134. The proposed amendments reduce the information burden on the public.

Notwithstanding any other provision of the law, no person is required to respond to, nor shall any person be subject to a penalty for failure to comply with a collection of information unless it displays a currently valid OMB Control Number.

It has been determined that the proposed rulemaking is not significant for purposes of Executive Order 12866.

List of Subjects in 15 CFR Part 303

Administrative practice and procedure, American Samoa, Customs duties and inspection, Guam, Imports, Marketing quotas, Northern Mariana Islands, Reporting and recordkeeping requirements, Virgin Islands, Watches and jewelry.

For reasons set forth above, 15 CFR Part 303 is proposed to be amended as follows:

PART 303—[AMENDED]

1. The authority citation for 15 CFR Part 303 is revised to read as follows:

Authority: Pub. L. 94–241, 90 Stat. 263 (48 U.S.C. 1681, note); Pub. L. 97–446, 96 Stat. 2331 (19 U.S.C. 1202, note); Pub. L. 103–465, 108 Stat. 4991.

303.1 [Amended]

2. Section 303.1(a) is amended by removing the period at the end of the first sentence and adding ‘‘, and amended by Pub. L. 103–465, enacted December 8, 1994.’’.

§ 303.2 [Amended]

3. Section 303.2(a)(1) is amended by removing the period at the end of the sentence and adding ‘‘, as amended by Pub. L. 103–465, enacted December 8, 1994, 108 Stat. 4991.’’.

4. In § 303.2, paragraphs (a)(13) and (b)(3) are revised to read as follows:

§ 303.2 Definitions and forms.

(a) * * *

(13) Creditable wages means all wages—up to the amount per person shown in § 303.14(a)(1)(i)—paid to permanent residents of the territories employed in a firm's 9⅕ watch and watch movement assembly operations, plus any wages paid for the repair of

non-9⅕ watches up to an amount equal to 50 percent of the firm's total creditable wages. Excluded, however, are wages paid for special services rendered to the firm by accountants, lawyers, or other professional personnel and for the repair of non-9⅕ watches and movements to the extent that such wages exceed the foregoing ratio. Wages paid to persons engaged in both creditable and non-creditable assembly and repair activities may be credited proportionately provided the firm maintains production and payroll records adequate for the Departments' verification of the creditable portion.

* * * * *

(b) * * *

(3) *ITA–340 ''Permit to Enter Watches and Watch Movements into the Customs Territory of the United States.''* This form may be obtained, by producers holding a valid license, from the territorial government or may be produced by the licensee in an approved computerized format or any other medium or format approved by the Departments of Commerce and the Interior. The completed form authorizes duty-free entry of a specified amount of watches or watch movements at a specified U.S. Customs port.

* * * * *

5. In Section 303.2, paragraph (b)(4) is removed and paragraphs (b)(5) and (b)(6) are redesignated as paragraphs (b)(4) and (b)(5).

§ 303.6 [Amended]

6. Section 303.6(f) introductory text is amended at the beginning of the second sentence by removing ''The'' and adding ''At the request of a producer, the''; and in the middle of the fourth sentence by removing ''invited'' and adding ''considered''.

7. In § 303.6, the concluding text of paragraph (f) is removed.

8. Section 303.7 is amended by revising paragraph (b) to read as follows:

§ 303.7 Issuance of licenses and shipment permits.

* * * * *

(b) *Shipment Permit Requirements (ITA–340).* (1) Producers may obtain shipment permits from the territorial government officials designated by the Governor. Permits may also be produced in any computerized or other format or medium approved by the Departments. The permit is for use against a producer's valid duty-exemption license and a permit must be completed for every duty-free shipment.

(2) Each permit must specify the license and permit number, the number of watches and watch movements included in the shipment, the unused balance remaining on the producer's license, pertinent shipping information and must have the certification statement signed by an official of the licensee's company. A copy of the completed permit must be sent electronically or taken to the designated territorial government officials, no later than the day of shipment, for confirmation that the producer's duty exemption license has not been exceeded and that the permit is properly completed.

(3) The permit (form ITA–340) shall be filed with Customs along with the other required entry documents to receive duty-free treatment unless the importer or its representative clears the documentation through Customs' automated broker interface. Entries made electronically do not require the submission of a permit to Customs, but the shipment data must be maintained as part of a producer's recordkeeping responsibilities for the period prescribed by Customs' recordkeeping regulations. U.S. Customs Service Import Specialists may request the documentation as they deem appropriate to substantiate claims for duty-free treatment, allowing a reasonable amount of time for the importer to produce the permit.

§ 303.8 [Amended]

9. In § 303.8, paragraph (c)(2) is revised to read as follows:

§ 303.8 Maintenance of duty-exemption entitlements.

* * * * *

(c) * * *

(2) Reallocate the allocation or part thereof to new entrant applicants; or

* * * * *

§ 303.10 [Removed and Reserved]

10. Section 303.10 is removed and reserved.

§ 303.11 [Removed and Reserved]

11. Section 303.11 is removed and reserved.

§ 303.12 [Amended]

12. Section 303.12(b)(3) introductory text is amended by adding, after the word ''registered'', the words '', certified or express carrier mail''.

13. Section 303.12(c)(1) is amended by removing from the first sentence ''§ 303.2(b)(6)'' and adding ''§ 303.2(b)(5)''.

14. Section 303.12(c)(2) is amended at the end of the first sentence by removing the period and adding '', as amended by Pub. L. 103–465.''.

15. In § 303.14, the heading of paragraph (b) and paragraphs (b)(1) and (b)(3) are revised and paragraph (b)(4) is added to read as follows:

§ 303.14 Allocation factors and miscellaneous provisions.

* * * * *

(b) *Minimum assembly requirements and prohibition of preferential supply relationship.* (1) No insular watch movement or watch may be entered free of duty into the customs territory of the United States unless the producer used 30 or more discrete parts and components to assemble a mechanical watch movement and 33 or more discrete parts and components to assemble a mechanical watch.

* * * * *

(3) Watch movements and watches assembled from components with a value of more than the $35 for watch movements and $200 for watches shall not be eligible for duty-exemption upon entry into the U.S. Customs territory. Value means the value of the merchandise plus all charges and costs incurred up to the last point of shipment (i.e., prior to entry of the parts and components into the territory).

(4) No producer shall accept from any watch parts and components supplier advantages and preferences which might result in a more favorable competitive position for itself vis-a-vis other territorial producers relying on the same supplier. Disputes under this paragraph may be resolved under the appeals procedures contained in § 303.13(b).

* * * * *

16. Section 303.14(c)(1)(iv) is amended by removing ''65%'' and adding ''75%''.

17. Section 303.14(c)(2) is amended by removing ''§ 303.10(c)(2)'' and adding ''§ 303.5(c)''.

18. Section 303.14(c)(3) is removed.

19. Section 303.14(e) is amended by removing ''3,600,000'' and adding ''3,100,000'' in its place.

Paul L. Joffe,

Acting Assistant Secretary for Import Administration, International Trade Administration, Department of Commerce.

Allen Stayman,

Director, Office of Insular Affairs, Department of the Interior.

[FR Doc. 96–18427 Filed 7–19–96; 8:45 am]

BILLING CODE 3510–DS–P and 4310–93–P

DEPARTMENT OF LABOR

Occupational Safety and Health Administration

29 CFR Parts 1910 and 1926

[Docket No. S–778]

Miscellaneous Changes to General Industry and Construction Standards; Proposed Paperwork Collection, Comment Request for Coke Oven Emissions and Inorganic Arsenic

AGENCY: Occupational Safety and Health Administration, Labor.

ACTION: Proposed rule.

SUMMARY: With this document, the Occupational Safety and Health Administration (OSHA) is continuing the process of removing or revising standards that are out of date, duplicative, unnecessary, or inconsistent in response to a March 4, 1995 memorandum from the President. This document proposes substantive changes to both health and safety standards to reduce regulatory requirements while maintaining employee protection. Changes proposed include reducing chest x-ray frequency and eliminating sputum cytology examinations for the coke oven and inorganic arsenic standards, changing the emergency-response provisions of the vinyl chloride standard, eliminating public safety provisions of the temporary labor camp standard, eliminating unnecessary OSHA standard references in the textile industry standards and others.

DATES: Written comments and requests for a hearing on this proposal must be postmarked by September 20, 1996.

ADDRESSES: Comments should be submitted in quadruplicate or 1 original (hardcopy) and 1 diskette (5¼ or 3½ inch) in WordPerfect 5.0, 5.1, 6.0 or 6.1, or ASCII to: Docket Office, Docket No. S–778, U.S. Department of Labor, Occupational Safety and Health Administration, Room N–2634, 200 Constitution Avenue, NW., Washington, DC 20210 (telephone (202) 219–7894). Any information not contained on disk (e.g., studies, articles) must be submitted in quadruplicate. Written comments limited to 10 pages in length also may be transmitted by facsimile to (202) 219–5046, provided an original and 3 copies are sent to the Docket Office thereafter.

Requests for a hearing should be sent to: Mr. Tom Hall, U.S. Department of Labor, Occupational Safety and Health Administration, Room N–3647, 200 Constitution Avenue NW., Washington, DC 20210 (telephone (202) 219–8615).

Comments on the reduction of paperwork burden and renewal of paperwork authorization for inorganic arsenic and coke oven emissions should be sent to the OSHA docket and to the Office of Information and Regulatory Affairs, OMB, New Executive Office Bldg., Rm. 10235, 725 17th St. NW., Washington, DC 20503, Attn. OSHA Desk Officer.

For an electronic copy of this Federal Register notice, contact the Labor News Bulletin Board at (202) 219–4748; or OSHA's WebPage on the Internet at http://www.OSHAgov. For news releases, fact sheets and other short documents, contact OSHA FAX at (900) 555–3400 at $1.50 per minute.

FOR FURTHER INFORMATION CONTACT: Technical inquiries should be directed to Mr. Pat Cattafesta, Office of Electrical/Electronic and Mechanical Safety Standards, U.S. Department of Labor, Occupational Safety and Health Administration, Room N3609, 200 Constitution Ave., NW., Washington, DC 20210 [telephone (202)-219–7202; FAX (202)–219–7477].

Requests for interviews and other press inquiries should be directed to Ms. Ann Cyr, U.S. Department of Labor, Occupational Safety and Health Administration, Office of Information and Consumer Affairs, Room N–3647, 200 Constitution Avenue NW., Washington, DC 20210 [telephone (202) 219–8148].

SUPPLEMENTARY INFORMATION:

I. Background

In March 1995, the President directed Federal agencies to undertake a line-by-line review of their regulations to determine where they could be simplified or clarified. OSHA initiated such a review, and as a result completed a document on May 31, 1995, entitled ''OSHA's Regulatory Reform Initiatives.'' That document detailed the Agency's findings as to which regulations could be deleted or revised without reducing employee health and safety, and which by clarifying requirements might improve compliance by employers and, consequently, provide enhanced occupational safety and health protection to employees. This regulatory improvement process involves revocation of outdated and obsolete provisions, elimination of substantive requirements which do not appear to be effective, consolidation of repetitious provisions, and clarification of confusing language. The Agency began this process with an administrative notice which made minor clarifications and technical amendments (61 FR 9228, March 7,1996). This document proposes substantive changes to standards which the agency believes are unnecessary or ineffective in protecting worker health or safety. As these changes are substantive, notice and comment is required. Final decisions on carrying out the proposed revisions will depend on the record after considering public comment.

II. Summary and Explanation

Amendments to Part 1910

A. Explosives and Blasting Agents (§ 1910.109)

When § 1910.109 was first promulgated, Table H–21 (American Table of Distances for Storage of Explosives) specified the distances that must be maintained between stored explosives and inhabited buildings, passenger railways, and public highways. It also specified required distances between stored explosive magazines. Table H–21 also applied to the manufacture of explosives to the extent that it specified distances between an explosive manufacturing building and inhabited buildings, passenger railways, public highways, and magazines.

In 1978, OSHA published a final rule (43 FR 49726) which revoked certain requirements that were called ''nuisance standards'' because they did not deal directly with workplace safety and health or were the jurisdiction of some other regulatory agency. Among the requirements revoked were the three columns of Table H–21 that specified distances to inhabited buildings, passenger railways, and public highways because they dealt with public and property protection-not employee protection. As a result, the current Table H–21 specifies only the distances between magazines.

Because Paragraph (c)(1)(vi) of § 1910.109 was inadvertently overlooked during the 1978 rulemaking, this paragraph still makes reference to ''inhabited buildings, passenger railways, and public highways.'' Consequently, OSHA is proposing to remove this phrase. Also, the first sentence of footnote number 5 of Table H–21 reads: ''This table applies only to the manufacture and permanent storage of commercial explosives.'' OSHA is proposing to remove the words ''manufacture and'' from the first sentence of footnote number 5 of Table H–21.

Paragraph (d)(1)(iv) of § 1910.109 states that blasting caps or electric blasting caps shall not be transported over the highways on the same vehicles with other explosives. However, DOT

regulations at 49 CFR 177.835(g)((3)(i) provide an approved method for the transport of detonators (blasting caps) on the same vehicle with other explosives.

OSHA believes that blasting caps can be safely transported on the same vehicle with other explosives if such transport is done in accordance with the method specified in the Department Of Transportation (DOT) regulations.

Therefore, OSHA is proposing to amend paragraph (d)(1)(iv) to permit the transportation of blasting caps or electric blasting caps on the same vehicle with other explosives if they are transported in accordance with the method specified in DOT regulations at 49 CFR 177.835(g)(3)(i).

Paragraph (e)(2)(i) of § 1910.109 states:

> Empty boxes and paper and fiber packing materials which have previously contained high explosives shall not be used again for any purpose, but shall be destroyed by burning at an approved isolated location out of doors, and no person shall be nearer than 100 feet after the burning has started.

The purpose of this requirement is to ensure that any boxes or packing material that may have been contaminated by leaking explosives do not present a hazard to employees. Consequently, all boxes and packing material, contaminated or not, may not be reused and must be disposed of by burning at an approved outdoor location.

However, environmental agencies often will not permit the burning of such materials. In addition, DOT permits the reuse of packaging materials if such reuse is accomplished in accordance with the requirements of 49 CFR 173.28. Thus, employers are confronted by a conflict between the standards of two Federal agencies. OSHA believes that such containers and packing materials should be permitted to be reused if uncontaminated, and if accomplished in accordance with DOT regulations.

Therefore, OSHA is proposing that paragraph (e)(2)(i) of § 1910.109 be amended to read as follows:

> Empty containers and paper and fiber packing materials which have previously contained explosive materials shall be disposed of in a safe manner, or reused in accordance with Department of Transportation requirements at 49 CFR 173.28.

B. Storage and Handling of Liquefied Petroleum Gases (1910.110)

Paragraphs (b)(15)(v)-(vii) of § 1910.110 contain requirements for the location of backflow check valves, excess-flow valves, and shutoff valves on tank cars and transport trucks. Paragraph (b)(15)(viii) of § 1910.110 contains requirements for locating tank cars and transport trucks during loading and unloading operations.

The design of transportation vehicles and the safe location of such vehicles during loading and unloading operations are under the jurisdiction of DOT and not OSHA. Therefore, OSHA is proposing to delete paragraphs (b)(15)(v)-(viii) of § 1910.110. OSHA is also proposing to redesignate paragraph (b)(15)(ix) as new paragraph (b)(15)(v) of § 1910.110.

Paragraphs (c)(2)(ii)-(iv) of § 1910.110 contain specifications for the marking of LPG cylinders. These marking specifications are duplicative of DOT requirements. Accordingly, OSHA is proposing to delete them.

Paragraph (e)(10) of § 1910.110 contains limitation requirements on the capacity of LPG containers that are used to fuel passenger carrying vehicles. As requirements pertaining to passenger carrying vehicles are under the jurisdiction of DOT, OSHA is proposing to delete the text of paragraph (e)(10) of § 1910.110.

Paragraph (g) of § 1910.110 contains requirements for the installation of LP-gas systems on commercial vehicles. The installation of LP-gas systems on commercial vehicles is under the jurisdiction of DOT. OSHA, therefore, is proposing to delete the text from paragraph (g) of § 1910.110 and to reserve the paragraph designation.

C. Storage and Handling of Anhydrous Ammonia (§ 1910.111)

Paragraph (f)(7) of § 1910.111 contains safety requirements for full trailers and semitrailers that transport ammonia. Paragraph (f)(8) of § 1910.111 contains requirements pertaining to the protection of such vehicles against collision. As full trailers and semitrailers that transport ammonia are under the jurisdiction of DOT, OSHA is proposing to delete the text of paragraphs (f)(7) and (f)(8) of § 1910.111.

D. Sanitation (§ 1910.141)

OSHA proposes to delete the definition for ''lavatory,'' given in paragraph (a)(2)(i) of § 1910.141. This definition states that ''*lavatory* means a basin or similar vessel used exclusively for washing of hands, arms, faces, and head.'' OSHA believes that the meaning of the term is self-explanatory in the context of the section. OSHA specifically seeks comment as to whether, in fact, deletion of this definition may diminish the health of employees in affected workplaces.

E. Temporary Labor Camps (§ 1910.142)

Section 1910.142 (a)(4) provides regulations for the closing of temporary labor camps. Upon the closing of a camp site, the regulations require the employer to collect all refuse, garbage, and manure, to fill all privy pits, to lock and secure any remaining privy buildings, and to have all buildings in a clean and sanitary condition.

Because this paragraph deals with closing the site, which occurs after the employees have left, this paragraph essentially provides not for worker safety, but for public safety, which is outside the Agency's mission. For these reasons, OSHA proposes to remove § 1910.142(a)(4). OSHA does note, however, that employers may be responsible for adhering to other standards regarding public health and safety in the locality or State in which the camp site is located.

F. Safety Color Code for Marking Physical Hazards (§ 1910.144)

Section 1910.144 provides guidance on the colors to use to mark physical hazards. These colors were required so that emergency devices and physical hazards could be identified quickly by employees. Because removal of these requirements from 29 CFR part 1910 would have minimal effect on employee safety and health, the Agency has decided not to provide this standard. For employers desiring guidance in this area, the American National Standards Institute, ANSI Z535.1–91, Safety Color Code is available. OSHA, therefore, proposes to remove § 1910.144.

G. Medical Services and First Aid (§ 1910.151)

Section 1910.151 states the obligation of employers to have medical services available to provide advice on workplace health matters, and for use by employees if needed.

Paragraph (b), in particular, requires the availability of first aid services for workplaces that do not have medical providers nearby. This paragraph also requires that first aid supplies approved by the consulting physician be on hand.

OSHA proposes to amend § 1910.151(b) so that the approval of first aid supplies by the consulting physician is no longer required, although the standard would continue to require that adequate supplies be available. Commercial first aid kits are readily available and will meet the needs of most employers and most worksites. If the workplace has unusual hazards or poses special problems that would require modification of a commercial first aid kit, or the

development of a specialized kit, the Agency expects that the employer will provide those special items. If the employer is unsure whether a commercially available kit is sufficient, professional advice should be obtained. Such advice, however, would not be required by OSHA as a matter of course. These changes will allow the employer more flexibility in meeting the Agency's first aid requirements, without affecting employee health and safety.

H. Fire Brigades (§ 1910.156)

Section 1910.156 contains requirements for the organization, training, and provision of personal protective equipment for fire brigades. Requirements for negative-pressure self-contained breathing apparatus are listed in § 1910.156(f)(2)(iii). These requirements were intended to remain mandatory for 18 months after the National Institute for Occupational Safety and Health (NIOSH) certified a positive-pressure breathing apparatus with the same or longer service life as the currently required negative-pressure breathing apparatus. The 18-month period was to allow employers to phase in the new apparatus.

NIOSH has since certified a positive-pressure breathing apparatus, and the 18 month phase-in period has ended. This paragraph is therefore unnecessary, and OSHA proposes to remove it.

I. Helicopters (§ 1910.183)

Section 1910.183(a) states that helicopter cranes are expected to comply with any applicable regulations of the Federal Aviation Administration (FAA). Since OSHA does not have the statutory authority to enforce FAA regulations for helicopters, (found at 14 CFR part 133), it is proposed that § 1910.183(a) be revoked.

J. Pulp, Paper, Paperboard Mills (§ 1910.261)

Section 1910.261 contains requirements that apply to establishments where pulp, paper, and paperboard are manufactured and converted. Certain standards in paragraphs (a), (b), (c), (d), (e), (g), (h), (j), (k), and (m) of § 1910.261 require these establishments to comply with a number of standards of the American National Standards Institute (ANSI). The inclusion of these standards in § 1910.261 duplicates other standards in part 1910 which apply to general industry as a whole. Many of the other general industry standards cover the same hazards, and in many cases, they share the same source materials as the provisions in § 1910.261.

All but one of the ANSI standards referenced in § 1910.261 were source documents for OSHA standards that have general application without regard to any specific industry. For example, ANSI Standard A12.1–1967, Safety Requirements for Floor and Wall Openings, Railings, and Toeboards is referenced in § 1910.261(a)(3)(ii) and is also the source standard for § 1910.23, Guarding Floor and Wall Openings and Holes.

OSHA believes that the OSHA standard, codified in Section 1910.23, provides equivalent or better protection for workers in this industry than the ANSI standard, A12.1–1967, which is referenced in § 1910.261. OSHA proposes, therefore, to revoke § 1910.261(a)(3)(ii).

Similarly, there are a number of other OSHA standards that OSHA believes can provide equivalent or better protection for pulp and paper workers than the ANSI standards referenced in paragraphs (a), (b), (c), (d), (e), (g), (h), (j), (k) and (m) in § 1910.261. For this reason, OSHA proposes to revoke many provisions of § 1910.261 and to apply the corresponding provisions found elsewhere in part 1910. The following table lists the OSHA standards proposed for revocation, the referenced ANSI standards and the OSHA standards that will provide equivalent or better protection.

Standard proposed for revocation	Referenced ANSI standard	Equivalent OSHA standard
1910.261(a)(3)(ii)	A12.1–1967	§ 1910.23
1910.261(a)(3)(iv)	A14.1–1968	§ 1910.25
1910.261(a)(3)(v)	A14.2–1956	§ 1910.26
1910.261(a)(3)(vi)	A14.3–1956	§ 1910.27
1910.261(a)(3)(ix)	B15.1–1953	§ 1910.219
1910.261(a)(3)(xi)	B30.2–1967	§ 1910.179
	B30.5–1968	§ 1910.180
1910.261(a)(3)(xii)	B30.2–1967	§ 1910.179
1910.261(a)(3)(xiii)	B30.2–1943	§ 1910.179
	B30.5–1968	§ 1910.180
1910.261(a)(3)(xv)	B56.1–1969	§ 1910.178
1910.261(a)(3)(xvii)	01.1–1954	§ 1910.213
		§ 1910.214
1910.261(a)(3)(xviii)	Z4.1–1968	§ 1910.141
1910.261(a)(3)(xix)	Z9.1–1951	§ 1910.94
1910.261(a)(3)(xx)	Z9.2–1960	§ 1910.94
1910.261(a)(3)(xxiv)	Z35.1–1968	§ 1910.145
1910.261(a)(3)(xxv)	Z87.1–1968	§ 1910.133
1910.261(a)(3)(xxvi)	Z88.2–1969	§ 1910.134
1910.261(a)(3)(xxvii)	Z89.1–1969	§ 1910.135
1910.261(b)(1)	B15.1–1953	§ 1910.219
1910.261(b)(2)	Z24.22–1957	§ 1910.132
	Z87.1–1968	§ 1910.133
	Z88.2–1968	§ 1910.134
	Z89.1–1969	§ 1910.135
1910.261(b)(3)	A12.1–1967	§ 1910.23
1910.261(b)(6)	B56.1–1969	§ 1910.178
1910.261(c)(2)(vi)	B30.2–1967	§ 1910.179
1910.261(c)(3)(i)	A12.1–1967	§ 1910.23
	A14.1–1968	§ 1910.25
	A14.2–1956	§ 1910.26
	A14.3–1956	§ 1910.27
1910.261(c)(8)(i)	B30.2–1967	§ 1910.179

Standard proposed for revocation	Referenced ANSI standard	Equivalent OSHA standard
1910.261(c)(11)	B56.1–1969	§ 1910.30
1910.261(d)(1)(ii)	Z87.1–1968	§ 1910.133
1910.261(e)(3)	B15.1–1955	§ 1910.219
1910.261(e)(7)	O1.1–1961	§ 1910.213
1910.261(e)(9)	B15.1–1953	§ 1910.219
1910.261(g)(15)(vi)	Z4.1–1968	§ 1910.141
1910.261(h)(2)(iii)	K13.1–1967 Z88.2–1967.	§ 1910.134
1910.261(j)(1)(iv)	B15.1–1958	§ 1910.219
1910.261(j)(3)	A12.1–1967	§ 1910.23
1910.261(j)(4)(ii)	A12.1–1967	§ 1910.23
1910.261(j)(5)(iv)	B15.1–1953	§ 1910.219
1910.261(j)(6)(ii)	B15.1–1953	§ 1910.219
1910.261(k)(2)(i)	B15.1–1953	§ 1910.219
1910.261(k)(4)	A12.1–1967	§ 1910.23
1910.261(m)(2)	B56.1–1969	§ 1910.178
1910.261(m)(4)	Z87.1–1968	§ 1910.133
1910.261(m)(5)(i)	Z87.1–1968	§ 1910.132
1910.261(m)(5)(ii)	B56.1–1969	§ 1910.178

Similarly, OSHA believes that the OSHA standard, § 1910.95, Occupational Noise Exposure, provides worker protection that is at least equivalent to that provided by the ANSI standard, Z24.22–1957, Method of Measurement of Real-Ear Attenuation of Ear Protectors, that is referenced in § 1910.261(a)(3)(xxii). OSHA, therefore, proposes to revoke § 1910.261(a)(3)(xxii) to eliminate this duplicative coverage.

Paragraph (b)(5) of § 1910.261 requires specific procedures to be followed and personal protective equipment to be worn by workers in the pulp, paper and paperboard industry who enter closed vessels, tanks, chip bins, and similar equipment. This standard, however, does not provide the necessary requirements for monitoring, testing, and communication that are critical when working in a confined space.

OSHA proposes to revoke paragraph (b)(5) of § 1910.261 for two reasons. First, § 1910.146, Permit-Required Confined Spaces, provides better protection for workers who are required to work in a confined space. Section 1910.146 provides a comprehensive regulatory program within which employers can effectively protect employees who work in confined spaces. This program addresses the ongoing need for monitoring, testing and communication at these workplaces. Second, employers are required to comply with § 1910.146 when a specific industry standard does not completely address the known hazards of working in a confined space, a principle noted in paragraph (c)(2) of § 1910.5, which means that employers must already comply with § 1910.146 rather than paragraph (b)(5) of § 1910.261.

Paragraph (c)(2)(vii) of § 1910.261 requires employers to provide personal protective equipment to workers on a job basis. Since employers are required to comply with the general requirements for personal protective equipment in § 1910.132, OSHA proposes to revoke paragraph (c)(2)(vii) to eliminate this duplication of requirements in a way that will not decrease worker protection.

Paragraphs (c)(6)(ii) and (c)(7)(ii) of § 1910.261 require employers to provide workers with personal protective equipment and ear protection when the noise level may be harmful. Since employers are required to comply with the general requirements for personal protective equipment in § 1910.132 and the general requirements for occupational noise exposure in § 1910.95, OSHA proposes to revoke paragraphs (c)(6)(ii) and (c)(7)(ii) to eliminate this duplication of requirements.

Paragraphs (g)(1)(iv) and (k)(16) of § 1910.261 are specific electrical standards prescribed for the pulp, paper and paperboard industry that require compliance with subpart S, Electrical, in OSHA's standards. Since all of general industry is required to comply with all of subpart S for electrical standards, OSHA proposes to revoke paragraphs (g)(1)(iv) and (k)(16) of § 1910.261 to eliminate this duplication.

Paragraph (g)(2)(i) of § 1910.261 requires employers to provide employees working in the acid department with gas masks. Since employers are required to comply with the general requirements for respiratory protection in § 1910.134, OSHA proposes to revoke paragraph (g)(2)(i) to eliminate this regulatory duplication.

Paragraph (g)(15)(iv) of § 1910.261 is a standard prescribed for the pulp, paper and paperboard industry that addresses lead dust exposure, and requires compliance with § 1910.1000, Air Contaminants, in OSHA's standards. Since employers are required to comply with all of § 1910.1000, including paragraph 1910.1025 which addresses lead exposure, OSHA proposes to revoke paragraph (g)(15)(iv) to eliminate this duplication.

K. Textiles (§ 1910.262)

Paragraphs (c)(3) and (gg) of § 1910.262 require employers in textile establishments to provide guards for equipment that conform to the requirements of § 1910.219. Since all of general industry is required to comply with all of the general requirements of § 1910.219, OSHA proposes to revoke paragraphs (c)(3) and (gg) of § 1910.262 to eliminate this regulatory duplication.

Similarly, for the purpose of eliminating duplicate standards coverage, OSHA proposes to revoke a number of other standards in § 1910.262 that reference occupational safety and health standards of general application. The following table lists the OSHA standards proposed for revocation and the referenced general OSHA standards which will continue to apply to the Textile industry.

Standard Proposed for Revocation	Referenced OSHA Standard
1910.262(c)(3)	1910.219.
1910.262(c)(4)	1910.141.
1910.262(gg)	1910.219.
1910.262(ll)(1)	1910.23.
1910.262(qq)(1)	1910.132. 1910.133. 1910.134.
1910.262(qq)(2)	1910.134.
1910.262(rr)	1910.1000. 1910.94(d).

Paragraph (c)(8) of § 1910.262 requires employers to identify physical hazards in accordance with the requirements of § 1910.144. Section 1910.144 provides guidance on the colors to use to mark physical hazards. As noted earlier in Section F of this preamble, OSHA is proposing to revoke § 1910.144, since the Agency believes that sufficient guidance on this matter is given by the American National Standards Institute standard ANSI Z535.1–1991, Safety Color Code, and that removal of these requirements from 29 CFR part 1910 would have no discernible effect on employee safety and health. Since OSHA is proposing to revoke § 1910.144, which is referenced in § 1910.262(c)(8), OSHA also proposes to revoke § 1910.262(c)(8).

L. Sawmills (1910.265)

Section 1910.265 contains safety requirements for sawmill operations including, but not limited to, log and lumber handling, sawing, trimming, and planing; waste disposal; operation of dry kilns; finishing; shipping; storage; yard and yard equipment; and for power tools and related equipment used in connection with such operations. Certain paragraphs of this section incorporate and apply occupational safety and health standards of general application which apply to all employment covered by part 1910. As required in paragraph (a)(2) of this section, such standards apply to sawmill operations in accordance with the rules of construction set forth in § 1910.5. For example, the general standard regarding mechanical power-transmission apparatus in § 1910.219 is applicable to employment in sawmill operations covered in § 1910.265, and yet it is also incorporated by reference in paragraph (c)(22) of § 1910.265. OSHA believes that worker safety is not enhanced by repeating the application of § 1910.219 in § 1910.265, and proposes to revoke paragraph (c)(22) of § 1910.265. Also, since § 1910.5 applies to all industries, including the sawmill industry, OSHA proposes to revoke paragraph (a)(2) of § 1910.265 which merely references § 1910.5.

Similarly, for the purpose of eliminating duplicate standards coverage, OSHA proposes to revoke various provisions currently found in § 1910.265 which reference occupational safety and health standards of general application. The following table lists the OSHA standards proposed for revocation and the referenced general OSHA standards which will continue to apply to sawmills.

Standard Proposed for Revocation	Referenced OSHA Standard
1910.265(c)(3)(i)	1910.23.
1910.265(c)(10)	1910.25–27.
1910.265(c)(14)	1910.110.
1910.265(c)(16)	1910.106.
1910.265(c)(17)(i)	1910.1000.
1910.265(c)(17)(ii)	Subpart I.
1910.265(c)(17)(iii)	1910.94(d).
1910.265(c)(22)	1910.219.
1910.265(c)(26)(i)	1910.219.
1910.265(c)(30)(vi)	1910.219.
1910.265(c)(30)(x)	1910.178.
1910.265(e)(3)(ii)(d)	1910.219.
1910.265(f)(9)	1910.219.
1910.265(g)	Subpart I.
1910.265(h)	1910.141.
1910.265(i)	Subpart L.

Paragraph (c)(11) of § 1910.265 requires employers to mark physical hazards as specified in § 1910.144. Section 1910.144 provides guidance on the colors to use to mark physical hazards. As noted earlier in Section F of this preamble, OSHA is proposing to revoke § 1910.144 since the Agency believes that sufficient guidance on this matter is given by the American National Standards Institute standard ANSI Z535.1–1991, Safety Color Code, and that removal of these requirements from 29 CFR Part 1910 would have no discernible effect on employee safety and health. Since OSHA is proposing to revoke § 1910.144, which is referenced in § 1910.265(c)11), OSHA also proposes to revoke § 1910.265(c)(11).

Paragraph (c)(24)(iv)(a) of § 1910.265 requires employers to inspect slings daily when in use, and to remove a sling from service if it is found to be defective. In addition, paragraph (c)(24)(iv)(c) of § 1910.265 requires employers to provide suitable protection between the sling and the sharp unyielding surfaces of the load to be lifted. These provisions duplicate some of the general requirements for the use of slings in § 1910.184 which also include provisions for sling inspection, removal and protection. OSHA proposes to revoke paragraphs (c)(24)(iv)(a) and (c), to eliminate the duplication of requirements for slings in § 1910.265.

M. Agricultural Operations (§ 1910.267)

Section 1910.267 previously contained part 1910 requirements applicable to agricultural operations. These requirements were moved to § 1928.21 in 1975 (40 FR 18268). Since that time, § 1910.267 has been used simply to refer employers to § 1928.21 to locate these requirements. OSHA believes that § 1910.267 is now unnecessary and proposes to revoke it.

N. Telecommunications (§ 1910.268)

Paragraph (f) of 1910.268 contains requirements for rubber insulating equipment (gloves and blankets) used at telecommunications centers and field installations. As discussed below, OSHA has determined that these requirements are now outdated, and that they should be deleted.

OSHA believes that the provisions of paragraph (f) are unnecessary for several reasons. First, the general industry standard found at 29 CFR 1910.137, Electrical Protective Equipment, addresses all rubber insulating equipment, and revocation of paragraph (f) of § 1910.268 would eliminate this duplication of standards and related compliance problems. Second, § 1910.137 provides more comprehensive employee protection, since it covers requirements for manufacture and marking, electrical proof tests, voltages, test intervals, workmanship and in-service care and use. Third, § 1910.137, is written in performance-oriented language that provides employers with flexibility in meeting the standard. Thus, OSHA believes that paragraph (f) of § 1910.268 can be revoked without diminishing employee safety and health.

O. Vinyl Chloride (§ 1910.1017)

OSHA is proposing to delete paragraphs (g)(5)(i) and (ii) of § 1910.1017, vinyl chloride, which was promulgated in 1974. These paragraphs address entry into unknown and hazardous vinyl-chloride atmospheres. Paragraph (g)(5)(i) allows entry into unknown concentrations of vinyl chloride or concentrations greater than 36,000 ppm (lower explosive limit) only for purposes of life rescue. Paragraph (g)(5)(ii) allows entry into concentrations of vinyl chloride of less than 36,000 ppm, but greater than 3,600 ppm only for purposes of life rescue, firefighting, or securing equipment which will prevent a greater release of vinyl chloride.

In 1989, OSHA promulgated industry-wide provisions addressing emergency response with respect to entry into unknown or hazardous atmospheres under § 1910.120, the Hazardous Waste Operations and Emergency Response (HAZWOPER) standard (54 FR 9317, Mar. 6, 1989). Included in the scope of the HAZWOPER standard are requirements for ''Emergency response operations for releases of, or substantial threats of releases of, hazardous substances without regard to the location of the hazard.'' Thus, vinyl chloride, which is a ''hazardous substance'' as defined under the

HAZWOPER standard, is covered by the emergency response provisions in both the vinyl chloride and HAZWOPER rules. In regard to overlapping provisions in two applicable standards, the HAZWOPER standard specifically states in paragraph (a)(2)(i) that ''If there is a conflict or overlap [between emergency-response provisions in § 1910.120 and provisions in substance-specific standards], the provision more protective of employee safety and health shall apply * * *.''

OSHA believes that the emergency-response provisions in § 1910.120 are more protective overall than the relevant provisions in the vinyl chloride standard. Further, the provisions of § 1910.120, which require development of a broad program to appropriately respond to any potential emergency situation, may be viewed as giving more flexibility to employers to tailor and implement effective comprehensive emergency-response programs to suit their needs. Key provisions in § 1910.120(q) that would apply where there is a potential emergency associated with the release of vinyl chloride address the following: Development and implementation of an emergency response plan, paragraph (q)(1); elements required to be included in the emergency response plan, paragraph (q)(2); procedures for handling emergency response, paragraph (q)(3); use of skilled support personnel, paragraph (q)(4); use of specialist employees, paragraph (q)(5); training of emergency personnel, paragraph (q)(6), (7), and (8); medical surveillance and consultation for emergency-response personnel, paragraph (q)(9); use of chemical protective clothing, paragraph (q)(10); and procedures for post-emergency-response operations, paragraph (q)(11).

OSHA believes, therefore, that deletion of § 1910.1017(g)(5) (i) and (ii), in favor of § 1910.120, will not result in an increased risk to the safety or health of employees engaged in vinyl chloride emergency response operations. The Agency solicits comment on the question of the sufficiency of § 1910.120 to address the protection of vinyl chloride emergency response employees if, as proposed here, the emergency response provisions currently in the vinyl chloride standard are deleted.

P. Inorganic Arsenic (§ 1910.1018)

OSHA is proposing to revise the existing medical surveillance requirements in paragraph (n) of 29 CFR 1910.1018, that address inorganic arsenic, with respect to sputum-cytology examinations and chest x-rays. The requirement in paragraph (n)(2)(ii)(C) of § 1910.1018 that provides for a semi-annual sputum-cytology examination for employees 45 years of age or older or with 10 or more years of exposure over the action level is proposed to be deleted. Sputum-cytology examination was included originally under medical surveillance programs for arsenic workers based on OSHA's belief that such examinations were useful in screening for lung cancer.

In reevaluating this provision, the Agency has found no studies that address the efficacy of sputum-cytology examinations as a screening tool for lung cancer for workers specifically exposed to inorganic arsenic. Two randomized controlled studies [Exs. 1–1, 1–2], however, were evaluated with respect to the benefit of sputum-cytology examinations as a screening tool for lung cancer in another high-risk group, namely male smokers 45 years of age and older. The two studies included the Johns Hopkins Lung Project [Ex. 1–3] and the Memorial Sloan-Kettering Lung Project [Ex. 1–4], both part of the National Cancer Institute Cooperative Early Lung Cancer Detection Program. Together, the studies included 20,427 male smokers. These men were assigned at random to a dual-screen group (in which subjects underwent an annual chest radiograph, and sputum-cytologic study every 4 months) or to a single-screen group (in which annual chest radiographic screening was performed).

For both studies, there were no significant differences between the dual-screen and single-screen groups in the total number of lung-cancer cases, the number of late-stage lung-cancer cases, the number of resectable lung cancers, 5 year (Sloan Kettering) and 8 year (Johns Hopkins) survival rates and the number of lung-cancer deaths. Therefore, sputum cytology did not add any benefit to a lung cancer screening program that already included annual chest x-rays.

False-positive sputum-cytology results can be as high as 10 percent in patients with pulmonary infections and bronchial asthma [Ex. 1–5]. False positive results can lead to extensive testing, costs, and anxiety. A positive sputum-cytology examination, with a negative chest x-ray, is usually followed by an examination of the oral cavity, the pharynx, and the larynx by both direct visualization and flexible, fiber-optic laryngoscopy. If this examination is negative, then the lower respiratory tract is visualized by flexible fiber-optic bronchoscopy; bronchial washings and biopsy are often included. In addition, imaging studies may be done, including computed tomography (CT scan) and magnetic-resonance imaging (MRI). The more invasive of these procedures have inherent risks, including death [Ex. 1–6].

The American Cancer Society's recommendations for early detection of cancer in asymptomatic persons do not include the use of sputum-cytology examinations [Ex. 1–7]. The Society's decision in this regard was based on the lack of epidemiological evidence that would support the use of sputum-cytology screening, and the risks and costs associated with false positive exams [Ex. 1–8]. Therefore, since available data do not indicate that sputum-cytology examination adds any benefit to a lung-cancer screening program that already includes annual chest x-rays, and since false-positive results can lead to unnecessary and harmful medical follow-up procedures, OSHA is proposing that sputum-cytology examinations be deleted from the medical-surveillance requirements of the inorganic arsenic standard.

OSHA solicits comments on these conclusions with respect to the value of sputum-cytology exams, and requests submission of other data and views that may support or dispute the Agency's findings and conclusions.

Exhibits

1–1. Strauss GM, et al. Chest x-ray screening improves outcome in lung cancer: A reappraisal of randomized trials on lung cancer screening. Chest 107:270S–279S, June 1995.

1–2. Berlin NI, et al. The National Cancer Institute cooperative early lung cancer detection program. American Review of Respiratory Disease 130:545–49, 1984.

1–3. Tockman M. Survival and mortality from lung cancer in a screened population: The Johns Hopkins study. Chest 89(suppl):324S–25S, 1986.

1–4. Melamed MR, et al. Screening for early lung cancer: Results of the Memorial Sloan-Kettering Study in New York. Chest 86:44–53, 1984.

1–5. Benpassat J, et al. Predictive value of sputum cytology. Thorax 42:165–169, 1987.

1–6. Credle WF, et al. Complications of fiber optic bronchoscopy. American Review of Respiratory Disease 109:67–72, 1974.

1–7. Holleb AI, et al. American Cancer Society Textbook of Clinical Oncology, p. 155, American Cancer Society, 1991.

1–8. Holleb AI, et al. American Cancer Society Textbook of Clinical Oncology, p. 168–170, American Cancer Society, 1991.

OSHA is also proposing to revise the requirement in paragraph (n)(3)(ii) of § 1910.1018 of the inorganic arsenic standard, that provides for a semiannual chest x-ray for employees who are 45 years of age or older or who have 10 or more years of arsenic exposure over the action level. OSHA is proposing that the required frequency of chest x-ray for these employees be changed from

semiannual to annual. OSHA originally adopted the provision for semiannual x-rays based on the belief that such semiannual examinations were valid for screening for lung cancer.

OSHA maintains that it is necessary and appropriate to provide employees exposed to inorganic arsenic with a medical surveillance program, including chest x-rays, for the early detection of lung cancer. However, the Agency recognizes that the efficacy of providing chest x-rays semiannually for this purpose has never been determined by a large, randomized, and controlled scientific study.

Two recent randomized controlled studies [Exs. 1–1,1–2], were conducted on a group at high risk for developing lung cancer (namely, male smokers 45 years of age and older), and were evaluated with respect to the utility of periodic x-rays. These studies, which included the Mayo Lung Project [Ex. 1–9] and the Czechoslovak Study [Ex.1–10], were designed specifically to assess the efficacy of chest x-rays in detecting early-stage lung cancer among the members of this group. The studies compared several outcomes between experimental groups that were assessed using chest x-rays administered at periodic intervals (4 months in the Mayo Lung Project and 6 months in the Czechoslovak Study) and control groups receiving infrequent, sporadic, or (in some cases) no chest x-rays. (Participants in both the experimental and control groups were administered chest x-rays at the beginning of each study to ensure that they had no detectable lung tumors that would bias the research outcomes.)

These studies found that periodic chest x-rays led to enhanced detection of early-stage lung cancer and, as a consequence, higher rates of respectability for this cancer. As demonstrated by a subsequent analysis of these studies [Ex. 1–11], lung-cancer-specific survival based on fatality rate (i.e., number of deaths per diagnosed cases) improved significantly. This analysis also showed that the lower fatality rate among the experimental groups was not the result of overdiagnosis for lung cancer or lead-time bias. For the Mayo Lung Project and the Czechoslovak Study, respectively, fatality rates were found to be 59% and 78% in the experimental groups, and 72% and 95% in the control groups of persons diagnosed with lung cancer.

The efficacy of chest x-rays was also demonstrated by analyzing the outcomes for the few experimental group participants who did not undergo surgery when diagnosed with early-stage lung cancer, either because they refused surgery or surgery was contraindicated. This analysis was part of the research described in Exhibit 1–11, which combined the outcomes for experimental group participants in the Mayo Lung Project with similar experimental group participants from two other groups (the Memorial Sloan-Kettering Project and the Johns Hopkins Lung Project). The 5 year fatality rate for the nonsurgery participants was about 90 percent, compared with a 30-percent fatality rate for those participants who underwent cancer surgery. This comparison provides strong support for the efficacy of chest x-rays in detecting early-stage lung cancer and enhancing the survival of those participants who undergo subsequent surgery for removal of a detected tumor. Additionally, this comparison indicates that overdiagnosis and lead-time biases did not contribute significantly to the fatality-rate differences obtained between the experimental and control groups in the Mayo Lung Project and Czechoslovak Study.

Based on this discussion, OSHA believes that employees exposed to inorganic arsenic continue to need medical surveillance to detect lung cancer, and that chest x-rays are a valid method of detecting lung cancer. The proposed revision to the standard would reduce the frequency of chest x-rays from semiannual to annually.

This proposed frequency is based on an analysis described in Exhibit 1–11 showing that the 5-year fatality rate (about 30–35 percent) for persons diagnosed with lung cancer was the same for the experimental-group participants in the Mayo Lung Project, which administered chest x-rays every 4 months, and the experimental-group participants in the Memorial Sloan-Kettering Project and the Johns Hopkins Lung Project, which performed chest x-rays once a year. [See also Exs. 1–12 and 1–13] This analysis demonstrates that fatality rates did not differ in any practical or statistically significant fashion across these three major studies. OSHA, therefore, finds that an annual chest x-ray satisfies the purpose of the medical surveillance program required under the standard.

In summary, large randomized controlled studies indicate that semiannual chest radiography screenings show no benefit over annual screenings. OSHA believes that annual chest radiography screening of high-risk individuals, including workers exposed to inorganic arsenic, should continue since epidemiological data support the use of chest x-rays for detecting early-stage lung cancer; this decision results in lowering lung cancer fatality rates.

Further, although it is possible that intervals between x-rays for high-risk workers could be longer than 1 year, the Agency has no data to demonstrate precisely what other interval would be more appropriate. OSHA, therefore, believes that an annual x-ray provision is reasonable. Moreover, if the Agency has erred in this instance, it has done so on the side of over-protection rather than under-protection, as sanctioned by the U.S. Supreme Court in Industrial Union Department v. American Petroleum Institute, 448 U.S. 607 (1980).

OSHA solicits comment on these conclusions with respect to the value of performing annual x-rays, and requests submission of data and views that may support or dispute the Agency's findings and conclusions.

Exhibits

1–1. Strauss GM, et. al. Chest x-ray screening improves outcome in lung cancer: A reappraisal of randomized trials on lung cancer screening. Chest 107:270S–279S, June 1995.

1–2. Berlin NI, et. al. The National Cancer Institute cooperative early lung cancer detection program. American Review of Respiratory Diseases 130:545–49, 1984.

1–9. Fontana R, et. al. Lung cancer screening: The Mayo Program. Journal of Occupational Medicine 28:746–50, 1986.

1–10. Fontana R, et. al. Screening for lung cancer, a critique of the Mayo Lung Project. *Cancer 67:1155–64, 1991.*

1–11. Kubik A, Polak J. Lung cancer detection: Results of a randomized prospective study in Czechoslovakia. Cancer 57:2428–37, 1986.

1–12. Kubik A, et. al. Lack of benefit from semi-annual screening for cancer of the lung: Follow-up report of a randomized controlled trial on population of high risk males in Czechoslovakia. International Journal of Cancer 45:26–33, 1990.

1–13. U.S. Preventive Medicine Task Force. Guide to Clinical Preventive Services: An Assessment of the Effectiveness of 169 Interventions, p. 67–70. Williams & Wilkins, Baltimore, MD, 1989.

Q. Coke Oven Emissions (§ 1910.1029)

OSHA is proposing to revise the existing medical surveillance requirements in 29 CFR 1910.1029, coke oven emissions, with respect to sputum-cytology examinations and chest x-rays. The requirement in paragraph (j)(2)(vii) of § 1910.1029 that provides for a semiannual sputum-cytology examination for employees 45 years of age or older or with 5 or more years employment in the regulated area is proposed to be deleted. Sputum-cytology examination was included originally in the medical surveillance programs for coke oven workers based on OSHA's belief that such

examinations were useful in screening for lung cancer. (Note: Much of the following discussion of sputum-cytology examinations duplicates the discussion on that topic provided under ''P. Inorganic Arsenic'' above.)

In reevaluating this provision, the Agency found no available studies that address the efficacy of sputum-cytology examinations as a screening tool for lung cancer for workers specifically exposed to coke oven emissions. Two randomized controlled studies [Exs. 1–1, 1–2] however, were evaluated with respect to the benefit of sputum-cytology examinations as a screening tool for lung cancer in a high-risk group, namely male smokers 45 years of age and older. Two of these studies were the Johns Hopkins Lung Project [Ex. 1–3] and the Memorial Sloan-Kettering Lung Project [Ex. 1–4], both part of the National Cancer Institute Cooperative Early Lung Cancer Detection Program. Together, the studies included 20,427 male smokers. These men were assigned randomly to a dual-screen group (in which subjects underwent annual chest radiograph and sputum-cytologic study every four months) or to a single-screen group (in which annual chest radiographic screening was performed).

For both studies, there were no significant differences between the dual-screen and single-screen groups in the total number of lung cancer cases, the number of late-stage lung cancer cases, the number of resectable lung cancers, 5 year (Sloan Kettering) and 8 year (Johns Hopkins) survival rates, and the number of lung cancer deaths. Therefore, sputum-cytology did not add any benefit to a lung cancer screening program that already included annual chest x-rays.

False-positive sputum-cytology results can be as high as 10 percent in patients with pulmonary infections and bronchial asthma [Ex. 1–5]. False positive results can lead to extensive testing, costs, and anxiety. A positive sputum-cytology examination, with a negative chest x-ray, is usually followed by an examination of the oral cavity, the pharynx, and the larynx by both direct visualization and flexible fiber-optic laryngoscopy. If this is negative, then the lower respiratory tract is visualized by flexible fiber-optic bronchoscopy; bronchial washings and biopsy are often included. In addition, imaging studies may be done, including computed tomography (CT scan) and magnetic resonance imaging (MRI). The more invasive of these procedures have inherent risks including death [Ex. 1–6].

The American Cancer Society's recommendations for early detection of cancer in asymptomatic persons do not include the use of sputum-cytology examinations [Ex. 1–7]. This decision was based on the lack of epidemiological evidence that would support the use of sputum-cytology screening, and the risks and costs associated with false positive exams [Ex. 1–8].

Therefore, since available data do not indicate that sputum-cytology examination adds any benefit to a lung cancer screening program that already includes annual chest x-rays, and since false-positive results can lead to unnecessary and harmful medical follow-up procedures, OSHA is proposing that sputum-cytology examinations be deleted from the medical surveillance requirements of the coke oven emission standard.

OSHA solicits comment on these conclusions with respect to the value of sputum-cytology exams, and requests submission of other data and views that may support or dispute the Agency's findings and conclusions.

Exhibits

1–1. Strauss GM, et al. Chest x-ray screening improves outcomein lung cancer: A reappraisal of randomized trials on lung cancer screening. Chest 107:270S–279S, June 1995.

1–2. Berlin NI, et al. The National Cancer Institute cooperative early lung cancer detection program. American Review of Respiratory Disease 130:545–49, 1984.

1–3. Tockman M. Survival and mortality from lung cancer in a screened population: The Johns Hopkins study. Chest 89(suppl):324S–25S, 1986.

1–4. Melamed MR, et al. Screening for early lung cancer: results of the Memorial Sloan-Kettering study in New York. Chest 86:44–53, 1984.

1–5. Benpassat J, et al. Predictive value of sputum cytology. Thorax 42:165–169, 1987.

1–6. Credle WF, et al. Complications of fiber optic bronchoscopy. American Review of Respiratory Disease 109:67–72, 1974.

1–7. Holleb AI, et al. American Cancer Society Textbook of Clinical Oncology, p. 155, American Cancer Society, 1991.

1–8. Holleb AI, et al. American Cancer Society Textbook of Clinical Oncology, p. 168–170, American Cancer Society, 1991.

The requirement in § 1910.1029, paragraph (j)(3)(ii) of the coke oven emissions standard, which provides for a semiannual chest x-ray for employees 45 years of age or older or with 5 or more years employment in a regulated area, is proposed for revison. OSHA is proposing that this requirement be revised to require an annual chest x-ray in the medical surveillance program for the group of employees noted above. OSHA adopted the provision for semiannual x-rays originally in the belief that semiannual examinations were valid for screening for lung cancer.

OSHA maintains that it is necessary and appropriate to provide coke-oven employees with a medical surveillance program, including chest x-rays, for the early detection of lung cancer. However, the Agency recognizes that the efficacy of providing chest x-rays semiannually for this purpose has never been determined by a large, randomized, and controlled scientific study.

Two recent randomized controlled studies [Exs. 1–1, 1–2], were conducted on a group at high risk for developing lung cancer (namely, male smokers 45 years of age and older), and were evaluated with respect to the utility of periodic x-rays. Two of these studies, referred to as the Mayo Lung Project [Ex. 1–9] and the Czechoslovak Study [Ex. 1–10], were designed specifically to assess the efficacy of chest x-rays in detecting early-stage lung cancer among the members of this group. The studies compared several outcomes between experimental groups that were assessed using chest x-rays administered at periodic intervals (four months in the Mayo Lung Project and six months in the Czechoslovak Study) and control groups receiving infrequent, sporadic, or (in some cases) no chest x-rays. (Participants in both the experimental and control groups were administered chest x-rays at the beginning of each study to ensure that they had no detectable lung tumors that would bias the research outcomes.)

The results of these studies found that periodic chest x-rays led to enhanced detection of early-stage lung cancer and, as a consequence, higher rates of resectability for this cancer. As demonstrated by a subsequent analysis of these studies [Ex. 1–11], lung-cancer-specific survival based on fatality rate (i.e., number of deaths per diagnosed cases) improved significantly. This analysis also showed that the lower fatality rate among the experimental groups was not the result of overdiagnosis for lung cancer or lead-time bias. For the Mayo Lung Project and the Czechoslovak Study, respectively, fatality rates were found to be 59% and 78% in the experimental groups, and 72% and 95% in the control groups of persons diagnosed with lung cancer.

The efficacy of chest x-rays was also demonstrated by analyzing the outcomes for the few experimental-group participants who did not undergo surgery when diagnosed with early-stage lung cancer, either because they refused surgery or surgery was contraindicated. This analysis was part of the research described in Exhibit 1–11, which combined the outcomes for experimental-group participants in the

Mayo Lung Project with similar experimental-group participants from two other studies (the Memorial Sloan-Kettering and Johns Hopkins Lung Projects). The 5-year fatality rate for the nonsurgery participants was about 90-percent, compared to a 30-percent fatality rate for those participants who underwent cancer surgery. This comparison provides strong support for the efficacy of chest x-rays in detecting early-stage lung cancer and enhancing the survival of those participants who undergo subsequent surgery for removal of a detected tumor. Additionally, this comparison indicates that overdiagnosis and lead-time biases did not contribute significantly to the fatality-rate differences obtained between the experimental and control groups in the Mayo Lung Project and Czechoslovak Study.

Based on this discussion, OSHA believes that employees exposed to coke-oven emissions continue to need medical surveillance to detect lung cancer, and that chest x-rays are a valid method of detecting lung cancer. The proposed revision to the standard would reduce the frequency of chest x-rays from semi-annually to annually.

This proposed frequency is based on an analysis described in Exhibit 1–11 showing that the 5-year fatality rate (about 30–35 percent) for persons diagnosed with lung cancer was the same for the experimental-group participants in the Mayo Lung Project, which administered chest x-rays every four months, and the experimental-group participants in the Memorial Sloan-Kettering and Johns Hopkins Lung Projects, which performed chest x-rays once a year. [see, also, Exs. 1–12, 1–13]. This analysis demonstrates that fatality rate did not differ in any practical or statistically-significant fashion across these three major studies. OSHA, therefore, finds that an annual chest x-ray satisfies the purpose of the medical surveillance program required under the standard.

In summary, Large randomized controlled studies indicate that semi-annual chest radiography screenings show no benefit over annual screenings. OSHA believes that annual chest radiography screening of high-risk individuals, including coke oven workers, should continue since epidemiological data support the use of chest x-rays for detecting early-stage lung cancer; this decision results in lower lung cancer fatality rates.

Further, although it is possible that intervals between x-rays for high risk workers could be longer than 1 year, the Agency has no data to demonstrate precisely what other interval would be more appropriate. OSHA believes an annual x-ray provision is reasonable. Moreover, if the Agency has erred in this instance, it has done so on the side of over-protection rather than under-protection, as sanctioned by the U.S. Supreme Court in Industrial Union Department v. American Petroleum Institute, 448 U.S. 607 (1980).

OSHA solicits comment on these conclusions with respect to the value of performing annual x-rays, and requests submission of data and views that may support or dispute the Agency's findings and conclusions.

Exhibits

1–1. Strauss GM, et al. Chest x-ray screening improves outcome in lung cancer: A reappraisal of randomized trials on lung cancer screening. Chest 107:270S–279S, June 1995.

1–2. Berlin NI, et al. The National Cancer Institute cooperative early lung cancer detection program. American Review of Respiratory Diseases 130:545–49, 1984.

1–9. Fontana R, et al. Lung cancer screening: The Mayo Program. Journal of Occupational Medicine 28:746–50, 1986.

1–10. Fontana R, et al. Screening for lung cancer, a critique of the Mayo Lung Project. Cancer 67:1155–64, 1991.

1–11. Kubik A, Polak J. Lung cancer detection: Results of a randomized prospective study in Czechoslovakia. Cancer 57:2428–37, 1986.

1–12. Kubik A, et al. Lack of benefit from semi-annual screening for cancer of the lung: Follow-up report of a randomized controlled trial on population of high risk males in Czechoslovakia. International Journal of Cancer 45:26–33, 1990.

1–13. U.S. Preventive Medicine Task Force. Guide to Clinical Preventive Services: An Assessment of the Effectiveness of 169 Interventions, p. 67–70. Williams & Wilkins, Baltimore, MD, 1989.

Amendments to Part 1926

A. Incorporation by Reference (§ 1926.31)

Based on its ongoing review of compliance and enforcement activities and recommendations from its Advisory Committee on Construction Safety and Health (ACCSH), OSHA is aware that difficulties have arisen regarding certain provisions of part 1926 that were adopted under sections 6(a) of the Act. Many of the standards adopted under section 6(a) were American National Standards Institute (ANSI) or National Fire Protection Association (NFPA) consensus standards which were incorporated by reference and contained advisory provisions (e.g. use the word ''should'' rather than ''shall'').

In the past, OSHA maintained that all standards, regardless of whether the term ''should'' or ''shall'' is used, created mandatory compliance responsibilities. Employers consistently challenged this position on the basis that section 6(a) of the Act only gave OSHA the authority to adopt ANSI standards verbatim. In ANSI standards, use of the term ''should'' means that the provision is only advisory. Therefore, employers maintained that ANSI ''should'' standards could only be advisory when adopted or incorporated by reference by OSHA under section 6(a).

Enforcement of ''should'' standards has been denied by the Occupational Safety and Health Review Commission, and by most of the appellate courts in which contested cases have been heard. For example, in *Marshall* v. *Pittsburgh-Des Moines Steel Company,* 584 F.2d 638, 643–44 (1978), the Third Circuit Court of Appeals determined that ''should'' standards were merely advisory because the consensus organization had reached ''substantial agreement'' that these provisions be viewed only as *recommendations,* and not as mandatory standards.

The courts have also ruled that failure to adopt an ANSI provision verbatim renders the resulting OSHA Section 6(a) provision invalid and unenforceable (see *Usery* v. *Kennecott Copper Corporation,* 577 F.2d 1113, 1117 (10th Cir. 1977)).

Although the ''should'' standards have not been enforceable in and of themselves, OSHA has employed them to demonstrate the existence of ''recognized hazards'' under the general duty clause (section 5(a)(1)) of the Act. However, the Review Commission has ruled that, as long as the ''should'' provision remains in effect as a OSHA standard, OSHA may not issue a general duty clause citation for the hazard it addresses (see *A. Prokosch & Sons Sheet Metal and Mid Hudson Automatic Sprinkler,* 1980 CCH OSHD ¶24,840). Based on the fact that OSHA cannot enforce these provisions either directly or indirectly, the Agency proposes to revise § 1926.31(a) to clarify that only the mandatory requirements of incorporated consensus standards are adopted as OSHA standards. The removal of the advisory provisions will also serve to simplify and streamline existing part 1926 standards.

In 1984, OSHA conducted a rulemaking for 29 CFR part 1910 (General Industry Standards) that was similar to the one described above for the construction standards in part 1926. That is, paragraph (a) of § 1910.6 was revised to clarify that only the mandatory provisions of standards incorporated by reference are adopted as OSHA general industry standards (49 FR 5318).

Paragraph (a) of § 1926.31 currently provides that ''the specifications, standards and codes * * * to the extent they are legally incorporated by reference in this part, have the same force and effect as other standards in this part.'' OSHA is proposing to add a sentence at the end of § 1926.31(a) to read as follows: ''Only the mandatory provisions (that is, provisions containing the word ''shall'' or other mandatory language) of standards incorporated by reference are adopted as standards under the Occupational Safety and Health Act.'' This amendment will effectively eliminate ''should'' standards incorporated by reference into part 1926.

B. Medical Services and First Aid (§ 1926.50)

Paragraph (d)(1) of § 1926.50 states that ''First-aid supplies approved by the consulting physician shall be easily accessible when required.'' Since first-aid kits that are commercially available will meet the needs of most employers, it is unnecessary for most employers to have a physician approve the contents of a first-aid kit. However, if the workplace has unusual hazards or special situations that would require modification of a commercial first-aid kit, or the development of a specialized kit, the Agency expects that the employer will provide these special items. If the employer is unsure whether a commercially available kit is sufficient, professional advice should be obtained. Such advice, however, would not be required as a matter of course. Accordingly, OSHA proposes to revise paragraph (d)(1) of § 1926.50 to eliminate the requirement for physician approval of first-aid supplies. The Agency believes that this change will allow the employer more flexibility in meeting the first-aid requirements without affecting employee safety.

Paragraph (f) of § 1926.50 states that the ''telephone numbers of the physicians, hospitals, or ambulances shall be conspicuously posted.'' This outdated requirement places an unnecessary burden on the employer. Since the 911 emergency number is nearly universal, OSHA proposes to revise this paragraph to limit the requirement for posting these numbers to those areas where the 911 emergency number is not available.

C. Flammable and Combustible Liquids (§ 1926.152)

Paragraph (a)(1) of § 1926.152 states that ''only approved containers and portable tanks shall be used for storage and handling of flammable and combustible liquids. Approved metal safety cans shall be used for the handling and use of flammable liquids in quantities greater than one gallon * * *.'' While approved metal safety cans are still acceptable, OSHA notes that various nationally recognized testing laboratories have also approved the use of plastic safety cans for flammable liquids. OSHA proposes to revise this paragraph to allow the use of approved plastic safety cans in addition to approved metal safety cans.

A ''safety can'', by definition, is a container with a capacity of 5 gallons or less that is equipped with a spring-closing lid and spout cover, a means to relieve internal pressure, and a flash-arresting screen. The Agency has determined that Department of Transportation (DOT)-approved containers of 5-gallon capacity or less, that are not equipped with a spring-closing lid, spout cover and flash-arresting screen can be used to transport relatively small quantities of flammable liquids safely. OSHA thus proposes to make DOT-approved containers of 5-gallon capacity or less also acceptable for the storage, use, and handling of flammable and combustible liquids.

OSHA is also proposing to revise § 1926.152(a)(1) to allow the use of the original container for quantities of flammable liquids that are one gallon or less. Where the original container is available, the employer may choose to use it, instead of an approved safety can for quantities of one gallon or less. If the original container is not available, an approved safety can must be used.

D. Initiation of Explosive Charges—Electric Blasting (§ 1926.906)

Paragraph (q) of § 1926.906 states that ''Blasters, when testing circuits to charged holes, shall use only blasting galvanometers equipped with a silver chloride cell especially designed for this purpose.'' This provision specifically requires the use of silver chloride dry cells as a power source for testing electric blast caps. By contrast, paragraph (e)(4)(vii) of § 1910.109, Explosives and blasting agents, states that ''Blasters, when testing circuits to charged holes, shall use only blasting galvanometers designed for this purpose'' and does not specifically require the use of silver chloride cells. In addition, the Mine Safety and Health Administration currently allows for the use of a blasting galvanometer or other instruments that are specifically designed for testing blasting circuits (30 CFR CH.1 § 56.6407). Therefore, OSHA proposes to correct this inconsistency by revising paragraph (q) of § 1926.906 to allow the use of other types of instruments, in addition to those equipped with silver-chloride cells, when testing circuits to charged holes.

III. Summary of the Preliminary Economic, Feasibility and Regulatory Flexibility Analyses

Preliminary Economic Analysis

The Agency is proposing to eliminate a number of provisions in its standards that are duplicative, unnecessary, or potentially in conflict with the rules of other Federal agencies. All of the changes OSHA is proposing to make are expected to benefit the regulated community by reducing confusion, enhancing utility, and increasing readability. Only four of the proposed changes, however, have quantifiable economic benefits. Although the extent to which employers currently comply with these provisions is not known, economists generally assume full compliance when assessing the costs of regulations. The same compliance baseline is also used to evaluate benefits. By eliminating these ''problem'' provisions for its standards, OSHA will lessen the burdens employers currently experience to comply with them, which will, in turn, generate cost savings. First Aid Kits

The proposed rule would eliminate the requirements in § 1910.151(b) and § 1926.50(d)(1) that employers must have first aid supplies approved by a consulting physician. This requirement does not apply to all facilities; instead it depends on whether an infirmary, clinic, or hospital is nearby and would be used by the employer to treat all injured employees, i.e., the requirement applies only in cases where no such facilities are in close proximity and the employer intends to treat first aid injuries on site. Although the number of establishments meeting these criteria is uncertain, the Agency believes it is reasonable to assume that 10 percent of establishments would do so. How the physician is to provide this consultation is not specified in OSHA's provisions. OSHA assumes that, at most, five minutes of a physician's time, valued at $100/hr,[1] would be required to approve the contents of the first aid kit at these establishments. For purposes of this analysis, OSHA also assumes that the physician provides 5 minutes of his or her time at an hourly wage rate, i.e., at a cost of $8.33.

This analysis further assumes that the physician needs to approve the first aid supplies once every 10 years, after which time the development of new

[1] Opportunity cost as measured by the market price for occupational physical exams. Agency estimates for the cost of exams suggest a rate of about $100 an hour.

kinds of medical supplies and the possibility of new hazards in the workplace would require a new consultation. The cost of 5 minutes of a physician's time annualized over 10 years is $1.19.

The Agency estimates that approximately 6.4 million employers fall under OSHA jurisdiction and would be affected by this change (*County Business Patterns,* 1993). Therefore, the annualized cost of satisfying these provisions is currently estimated to be $761,600 ((6.4 million × 10%) × $1.19). By eliminating this requirement, OSHA will reduce this burden, as well as the paperwork burden associated with obtaining and recording the physician's approval.

Coke Oven Emissions

The proposed revision to § 1910.1029(j) would eliminate the requirement for semiannual sputum cytology tests and reduce the required frequency of chest x-rays from semiannual to annual for workers who are 45 years of age or older or who have 5 or more years of employment in regulated areas. Regulated areas encompass the coke oven battery, including topside and its machinery, pushside and its machinery, coke side and its machinery, and battery ends; the wharf; the screening station; and the beehive oven and its machinery.

The Inflationary Impact Statement developed for OSHA in support of § 1910.1029 (*Inflationary Impact Statement: Coke Oven Emissions, 1976*) estimated total employment in coke ovens at 29,600. The same analysis estimated that 75 percent of these employees worked in regulated areas. The *1992 Census of Manufacturers* (Industry Series) indicated total employment in SIC 33121 (Coke Oven and Blast Furnace Products) at 8,600 and total production manhours at 15.7 million. A separate Census Industry Series count specific to coke ovens indicates a total of 11.2 million production manhours, which constitutes approximately 71 percent of SIC 33121's productive manhours, suggesting a total employment count in coke ovens of 6,135.

Assuming that the proportion of coke oven employees in regulated areas has remained constant, approximately 4,600 employees work in regulated areas at the present time. Approximately 30 percent of the workforce in 1994 was over 45 years of age (BLS data presented in *Statistical Abstract of the United States, 1995,* p. 402). Turnover rates in SIC 33, which includes coke ovens, are estimated at 5 percent annually (*National Occupational Exposure Survey: Analysis of Management Interview Responses, 1988*). A simple probability calculation suggests that approximately 77 percent of the regulated area workforce will have been exposed to coke oven emissions for 5 years or more.[2] Adjusting this percentage to reflect the assumption that 30 percent of employees are over 45 years of age results in an estimate of 84 percent[3] of coke oven employees (3,864 workers) potentially affected by the proposed revocation of this requirement.

1994 data obtained from the Physician Payment Review Commission (e-mail from Christopher Hogan, PPRC, to Tom Mockler, OSHA) indicate a national average x-ray charge of $54.40 and an average lab charge for cytology examination of bodily fluids of $51.90. There is also the potential for an additional charge averaging $19.00 for sputum specimen collection, but this is assumed to be contained within the fee for a medical exam. Therefore the savings for eliminating one chest x-ray and two sputum cytologies annually would be $158.20 per worker ($54.40 for one x-ray, plus $103.80 for two sputum cytology tests). For the group of 3,864 employees, the annual savings would be $611,285.

Inorganic Arsenic

As in the case of the coke oven standard, OSHA is proposing to eliminate the requirement for sputum cytology and reduce the frequency of chest x-ray exams from semiannual to annual for workers exposed above the inorganic arsenic action level of 5 $\mu g/m^3$ (29 CFR 1910.1018). Paragraph (n) of § 1910.1018 currently requires employees exposed above the action level for 30 days per year to receive these medical surveillance elements semi-annually if they are 45 years of age or older, or if they have had more than 10 years of exposure above the action level.

The Federal Register notice for the inorganic arsenic rulemaking [(May 5, 1978), p. 19585] indicated that of 660,000 workers exposed, 7,400 were exposed above 4 $\mu g/m^3$, i.e., close to or above the action level. Although arsenic uses and related exposures have shifted over time, the level of inorganic arsenic use in the U.S. appears to be approximately the same as it was at the time of the original rulemaking[4]. Therefore, for the purposes of this analysis, the Agency assumes that the exposed population size is also unchanged.

At the time of the original rulemaking, the Inflationary Impact Statement (*Inflationary Impact Statement: Inorganic Arsenic,* 1976) estimated that 50% of employees above the action level would need the semi-annual exams, based on OSHA's analysis of age, job tenure and turnover. Applying the same assumptions, the Agency estimates that approximately 3,700 workers would be affected by the proposed revisoin to this provision. This change will eliminate the need for testing valued at $158.20 (see the explanation above for coke ovens for cost details) for 3,700 employees, for an annual savings of $584,340.

Pulp and Paper

The existing pulp and paper standard, § 1910.261, contains paragraph (b)(5), ''vessel entering'', which states:

> Lifelines and safety harness shall be worn by anyone entering closed vessels, tanks, chip bins, and similar equipment, and a person shall be stationed outside in a position to handle the line and to summon assistance in the case of emergency.

Paragraph (b)(5) also prescribes other safety precautions applying to similar confined spaces in pulp and paper mills.

OSHA proposes to eliminate these specific separate requirements for confined space entry in pulp and paper mills, and instead reference § 1910.146, OSHA's generic confined spaces standard. In other words, employers in the pulp and paper industry will no longer have to comply with § 1910.261(b)(5), but with § 1910.146. Section 1910.146 requires that employers assess the hazards of their confined spaces and employ the appropriate safety precautions to deal with the relevant existing or potential hazard. Although § 1910.146 may require employers to complete additional checklists, conduct training, and plan for rescue, depending on the hazard present, employers will in many cases no longer need to require employees to wear lifelines or provide for outside ''attendants''[5].

[2] $(1-.05)^5=.77$ This calculation assumes equal probability of turnover in each year thereafter.

[3] $((.77)\times(1-.30))+(.30)=.84$ All other things equal, at least 30 percent of those with 5 or more years of exposure would be over 45.

[4] Based on the estimated level of raw arsenic trioxide consumed in U.S. (*Arsenic: Industrial, Biomedical, Environmental Perspectives,* 1983, p. 7; *Bureau of Mines, Mineral Commodity Summary, 1995*).

[5] For example, § 1910.146(c)(5) indicates that if an employer can certify that ventilation alone can reliably control atmospheric hazards in a space, and that is the only hazard posed by the space, they are exempt from many requirements of the standard, including the need for an outside attendant. Similarly, in § 1910.146(k)(3), employers are expressly exempt from using a lifeline if such usage

Continued

The costs of complying with § 1910.146 in the pulp and paper industry were included in OSHA's supporting Regulatory Impact Analysis (*Final Regulatory Impact Analysis and Regulatory Flexibility Analysis of the Final Permit-Required Confined Spaces Standard*, December 1992]. They were estimated to be approximately $4 million. No economic or technological feasibility problems were indicated.

By deleting the more rigid confined space requirements of the pulp and paper industry-specific standard and requiring employers to comply with a more performance-oriented requirement for attendants and lifelines, OSHA is simultaneously relieving a burden and enhancing safety. Based on the underlying analysis used by OSHA in producing the RIA for § 1910.146, a comparison of the costs associated with the requirement that an attendant be present (§ 1910.261(b)(5)) with the more flexible requirements in § 1910.146 indicates a savings to employers of approximately 450,000 manhours annually. Given the hourly compensation rate of $17 used in the RIA, this represents an annual savings of $7.7 million.

In summary, by revoking these four unnecessary or duplicative requirements, the Agency is reducing annual employer burdens related to first aid kits ($761,600), medical surveillance for coke oven emissions ($611,285) and inorganic arsenic workers ($584,340), and confined space entry in pulp and paper mills ($7.7 million), for a total annualized employer savings of $9,656,625.

Technological Feasibility

OSHA could not identify any requirement in the proposed revision and modification of OSHA standards that raises technological feasibility problems for employers. OSHA, therefore, has preliminarily concluded that technological feasibility is not an issue for the proposed changes in the standards.

IV. Regulatory Flexibility Certification

The Regulatory Flexibility Act of 1980 (5 U.S.C. 601 et seq.), as amended, requires that the Agency examine regulatory actions to determine if they would have a significant economic impact on a substantial number of small entities. As indicated elsewhere in this analysis, these modifications to existing regulations are expected to reduce the regulatory burden on all affected employers, large and small. For that reason, the Agency hereby certifies that these changes will not have a significant economic impact on a substantial number of small entities.

V. Environmental Assessment

The proposed rules have been reviewed in accordance with the requirements of the National Environmental Policy Act (NEPA) of 1969 (42 U.S.C. 4321 et seq.), the regulations of the Council of Environmental Quality (CEQ) (40 CFR part 1500), and DOL NEPA procedures (29 CFR part 11). As a result of this review, OSHA has concluded that the rules will have no significant environmental impact.

VI. International Trade

This proposed revision and revocation of OSHA standards is not likely to have a significant effect on international trade, since the changes involve the revocation of obsolete provisions, consolidation of repetitious provisions, and clarification of confusing language.

VII. Paperwork Reduction Act

Information Collection Requirements

As required by the Paperwork Reduction Act of 1995, this notice serves two purposes: (1) Solicit public comment on the changes that are proposed in this rule pertaining to the Inorganic Arsenic and the Coke Oven Emissions standards and (2) solicit public comment on the existing Inorganic Arsenic and Coke Oven Emissions information collection requests for their extension.

The Paperwork Reduction Act of 1995, 44 U.S.C. 3507(d) and 5 CFR 1320.11 require Federal agencies to submit collections of information contained in proposed rules for public comment in the Federal Register to the Office of Management and Budget (OMB) for review. The proposed rule impacts two active Information Collection Requests: Inorganic Arsenic (OMB Number 1218–0104) and Coke Oven Emissions (OMB Number 1218–0128).

The title, description, and respondent description of the information collection are described below with an estimate of the annual reporting burden. Included in the estimate is the time for reviewing instructions, gathering and maintaining the data needed, and completing and reviewing the collection of information. OSHA invites comments on whether the proposed collection of information:

1. Ensures that the collection of information is necessary for the proper performance of the functions of OSHA, including whether the information will have practical utility;

2. Estimates the projected burden including the validity of methodology and assumptions used accurately;

3. Enhances the quality, utility, and clarity of the information to be collected; and

4. Minimizes the burden of the collection of information on those who are to respond, including through the use of appropriate automated electronic, mechanical, or other technological collection techniques, or other forms ofinformation technology, e.g., permitting electronic submission of responses.

Title: Miscellaneous Changes to General Industry andConstruction.

Description: The purpose of these standards and their information collection requirements is to provide protection for employees against the health effects associated with occupational exposure to coke oven emissions and inorganic arsenic. These standards require employers to monitor employee exposure, to provide medical surveillance and to maintain employee exposure monitoring and medical records. If exposure levels are above the standards' Permissible Exposure Levels (PEL), then employers must establish and implement a written control plan to reduce exposures below the PELs. Employers are also required to notify OSHA area offices of regulated areas and changes to regulated areas. The proposed rule would delete the requirement for employee sputum cytology exams contained in the medical surveillance provisions of the Coke Oven Emissions and Inorganic Arsenic Standards. The proposed rule would also change the frequency of x-rays from semi-annual to annual in these standards. Description of Respondents: Employers whose employees may be exposed to coke oven emissions and inorganic arsenic. Estimate of Burden Hours and Cost: OSHA estimates that the total burden for Coke Oven Emissions will be 95,060 burden hours, a reduction of 2,945 hours (from employee medical examinations), at a cost savings of $611,285. For Inorganic Arsenic, the agency estimates the total burden to be 24,615 burden hours, a reduction of 3,663 hours (from employee medical examinations), at a cost savings of $584,340. Employee exposure monitoring and medical records required by both standards must be maintained for at least 40 years, or for the duration of employment plus 20 years whichever is longer. The agency has submitted a copy of the proposed rule to OMB for its review and approval

is either valueless or counterproductive from a safety standpoint.

of the information collections. Interested persons are requested to submit comments on the paperwork reduction regarding the proposed deletion of sputum cytology and frequency of x-rays to the Office of Information and Regulatory Affairs, Attn: OSHA Desk Officer, OMB, New Executive Office Building, 725 17th Street NW., Room 10235, Washington, DC 20503. Comments should also be submitted to the OSHA Docket Office for this proposal at OSHA Docket Office, Docket Number S–778, U.S. Department of Labor, Room N2625, 200 Constitution Avenue, NW., Washington, DC 20210.

In accordance with 44 U.S.C. 3506(c)(2)(a), this notice also solicits public comment on the existing Inorganic Arsenic and Coke Oven Emissions information collection requests for their extension. Persons interested in commenting on the existing information collection requirements contained in the Inorganic Arsenic and Coke Oven Emissions standards are requested to submit comment including suggestions for reducing burden to the OSHA Docket Office, Docket Number (ICR 96–7 Inorganic Arsenic orICR 96–8 Coke Oven Emissions), U.S. Department of Labor, Room N2625, 200 Constitution Avenue, NW., Washington, DC 20210. (Note that this is a different docket number than the Docket for proposal which poses to remove the sputum cytology and decrease the frequency of the chest x-rays) Comments submitted in response to this comment request will be summarized and/or included in the request for Office of Management and Budget approval of the information collection request; they will also become a matter of public record.

Cite reference	Total respondents	Frequency	Total responses	Avgerage time per response (hours)	Total cost	Burden (hours)
Coke Oven Emissions	22	On occasion	101,977	1.01	$1,363,900	95,060
Inorganic Arsenic	42	On occasion	58,763	1.06	2,017,684	24,615
Total			160,740		3,381,584	119,675

Copies of the referenced information collection requests are available for inspection and copying in the OSHA Docket Office and will be mailed immediately to persons who request copies by telephoning Vivian Allen at (202) 219–8076. For electronic copies of the Coke Oven Emissions and the Inorganic Arsenic requests, contact the Labor News Bulletin Board (202) 219–4784, or OSHA WebPage on the internet at http://www.osha.gov/. Copies of these information collection requests are also available at the OMB Docket Office.

VIII. Federalism

This proposed revision and revocation of OSHA standards has been reviewed in accordance with Executive Order 12612 (52 FR 41685, October 30, 1987), regarding Federalism. This Order requires that agencies, to the extent possible, refrain from limiting State policy options, consult with States prior to taking any actions which would restrict State policy actions, and take such actions only when there is clear constitutional authority and the presence of a problem of national scope. The Order provides for preemption of State law only if there is a clear Congressional intent for the Agency to do so. Any such preemption is to be limited to the extent possible.

Section 18 of the Occupational Safety and Health Act (OSH Act) expresses Congress' intent to preempt state laws relating to issues on which Federal OSHA has promulgated occupational safety and health standards. Under the OSH Act, a State can avoid preemption in issues covered by Federal standards only if it submits, and obtains Federal approval of, a plan for the development of such standards and their enforcement. Occupational safety and health standards developed by such Plan states must, among other things, be at least as effective in providing safe and healthful employment and places of employment as the Federal standards.

The proposed revision and revocation of standards is meant to reduce the volume and complexity of OSHA standards, and to improve compliance by employers, without diminishing worker safety and health. Those States which have elected to participate under Section 18 of the OSH Act are not preempted by this proposal, and will be able to address any special conditions within the framework of the Federal Act while ensuring that the State standards are at least as effective as the Federal standard. State comments are invited on this proposal and will be duly considered prior to promulgation of a final rule.

IX. Public Participation

Interested persons are requested to submit written data, views, and arguments concerning this proposal. These comments must be postmarked by September 20, 1996, and submitted in quadruplicate to the Docket Office, Docket No. S–778, Room N2624, U.S. Department of Labor, Occupational Safety and Health Administration, 200 Constitution Ave., NW., Washington, DC 20210.

All written comments received within the specified comment period will be made a part of the record and will be available for public inspection and copying at the above Docket Office address.

The proposed changes to the Inorganic Arsenic and Coke Oven Emission standards are issued pursuant to section 6(b)(7) of the Occupational Safety and Health (OSH) Act. That section does not require the Agency to hold a public hearing for changes in medical surveillance requirements.

Under section 6(b)(3) of the OSH Act and 29 CFR 1911.11, interested persons may request an informal hearing by filing a request for such a hearing including objections to the proposal which warrant a hearing. Persons who have objections to the proposal but do not wish to request an oral hearing, may submit their objections in their comments where they will be fully considered. The objections and hearing requests should be submitted in quadruplicate to Mr. Tom Hall, OSHA, U.S. Dept. of Labor, Rm. N–3647, 200 Constitution Ave. NW., Washington, DC 20210 (tel. 202–219–8619) and must comply with the following conditions:

1. The objection must include the name and address of the objector;

2. The objections must be postmarked by September 20, 1996;

3. The objections must specify with particularity grounds upon which the objection is based;

4. Each objection must be separately numbered; and

5. The objections must be accompanied by a detailed summary of the evidence proposed to be adduced at the requested hearing.

The proposed changes to the Inorganic Arsenic and Coke Oven

Emission standards are issued pursuant to section 6(b)(7) of the Occupational Safety and Health (OSH) Act. That section does not require the Agency to hold a public hearing for changes in medical surveillance requirements.

OSHA recognizes that there may be interested persons who, through their knowledge of safety or health or their experience, would wish to endorse or support the proposed actions set forth in this notice. OSHA welcomes such supportive comments, including any related information which may be available, so that the record of this rulemaking will present a balanced picture of the public response on the issues involved.

X. State Plan Standards

The States with their own approved occupational safety and health plans must adopt comparable standards within 6 months of the publication date of the final standard. These States are: Alaska, Arizona, California, Connecticut (for State and local government employees only), Hawaii, Indiana, Iowa, Kentucky, Maryland, Michigan, Minnesota, Nevada, New Mexico, New York (for State and local government employees only), North Carolina, Oregon, Puerto Rico, South Carolina, Tennessee, Utah, Vermont, Virgina, Virgin Islands, Washington and Wyoming. Until such time as State standards are promulgated, Federal OSHA will provide interim enforcement assistance, as appropriate, in those States.

List of Subjects:

29 CFR Part 1910:

Business and industry, Occupational safety and health, Hazardous materials, Fire protection.

29 CFR Part 1926:

Construction industry, Occupational safety and health, Fire protection, Explosives

XI. Authority

This document was prepared under the direction of Joseph A. Dear, Assistant Secretary of Labor for Occupational Safety and Health, U.S. Department of Labor, 200 Constitution Avenue, NW., Washington, DC. 20210.

Accordingly, pursuant to sections 4, 6, and 8 of the Occupational Safety and Health Act of 1970 (29 U.S.C. 653, 655, 657), section 107 of the Contract Work Hours and Safety Standards Act (40 U.S.C. 333) and Secretary of Labor's Order No. 1–90 (55 FR 9033), 29 CFR parts 1910 and 1926 are proposed to be amended as set forth below.

Signed at Washington, DC, this 15 day of July 1996.

Joseph A. Dear,

Assistant Secretary of Labor.

A. It is proposed to amend Part 1910 of 29 CFR as follows:

PART 1910—OCCUPATIONAL SAFETY AND HEALTH STANDARDS [AMENDED]

Subpart H—Hazardous Materials

1. The authority citation for subpart H is revised to read as follows:

Authority: Secs. 4, 6, and 8 of the Occupational Safety and Health Act of 1970 (29 U.S.C. 653, 655, 657); Secretary of Labor's Order No. 12–71 (36 FR 8754), 8–76 (41 FR 25059), 9–83 (48 FR 35736), or 1–90 (55 FR 9033), as applicable; and 29 CFR part 1911.

§ 1910.109 Explosives and blasting agents [Amended]

2. Remove the phrase, ''from inhabited buildings, passenger railways, and public highways and'' from paragraph (c)(1)(vi) of § 1910.109.

3. Remove the words, ''manufacture and'' from the first sentence in footnote number 5, of Table H–21, of § 1910.109.

4. In § 1910.109, revise paragraph (d)(1)(iv) to read as follows:

* * * * *

(d) * * *

(1) * * *

(iv) Blasting caps or electric blasting caps shall not be transported over the highways on the same vehicles with other explosives, unless packaged, segregated and transported in accordance with the Department of Transportation's Hazardous Materials Regulations (49 CFR parts 177–180).

5. In § 1910.109, revise paragraph (e)(2)(i) to read as follows:

* * * * *

(e) * * *

(2) * * *

(i) Empty containers and paper and fiber packing materials which have previously contained explosive materials shall be disposed of in a safe manner, or reused in accordance with the Department of Transportation's Hazardous Materials Regulations (49 CFR parts 177–180).

* * * * *

§ 1910.110 Storage and handling of liquefied petroleum gases [Amended]

1. Remove paragraphs (b)(15)(v)–(b)(15)(viii) of § 1910.110, and redesignate paragraph (b)(15)(ix) as (b)(15)(v).

2. Remove paragraphs (c)(2)(ii)–(c)(2)(iv) of § 1910.110, and redesignate paragraph (c)(2)(i) as (c)(2).

3. Remove and reserve paragraph (e)(10) of § 1910.110.

4. Remove and reserve paragraph (g) of § 1910.110.

§ 1910.111 Storage and handling of anhydrous ammonia [Amended]

Remove and reserve paragraphs (f)(7) and (f)(8) of § 1910.111.

Subpart J—General Environmental Controls

1. The authority citation for subpart J continues to read as follows:

Authority: Secs. 4, 6, and 8 of the Occupational Safety and Health Act of 1970 (29 U.S.C. 653, 655, 657); Secretary of Labor's Order No. 12–71 (36 FR 8754), 8–76 (41 FR 25059), 9–83 (48 FR 35736), or 1–90 (55 FR 9033), as applicable.

§ 1910.141 Sanitation [Amended]

2. Remove paragraph (a)(2)(i) of § 1910.141 and all paragraph designations for the definitions within paragraph (a)(2) of § 1910.141.

§ 1910.142 Temporary labor camps [Amended]

3. Remove paragraph (a)(4) of § 1910.142.

§ 1910.144 Safety color code for marking physical hazards [Removed]

4. Remove and reserve § 1910.144.

Subpart K—Medical and First Aid

1. The authority citation for subpart K is revised to read as follows:

Authority: Secs. 4, 6, and 8 of the Occupational Safety and Health Act of 1970 (29 U.S.C. 653, 655, 657); Secretary of Labor's Order No. 12–71 (36 FR 8754), 8–76 (41 FR 25059), 9–83 (48 FR 35736), or 1–90 (55 FR 9033), as applicable, and 29 CFR part 1911.

§ 1910.151 Medical Services and first aid [Amended]

2. Revise the final sentence in paragraph (b) of § 1910.151 to read as follows:

* * * * *

(b) * * * Adequate first aid supplies shall be readily available.

* * * * *

Subpart L—Fire Protection

1. The authority citation for subpart L continues to read as follows:

Authority: Secs. 4, 6, and 8 of the Occupational Safety and Health Act of 1970 (29 U.S.C. 653, 655, 657); Secretary of Labor's Order No. 12–71 (36 FR 8754), 8–76 (41 FR 25059), 9–83 (48 FR 35736), or 1–90 (55 FR 9033), as applicable, and 29 CFR part 1911.

§ 1910.156 Fire brigades [Amended]

2. Remove paragraph (f)(2)(iii) of § 1910.156.

Subpart N—Materials Handling and Storage

1. The authority citation for subpart N is revised to read as follows:

Authority: Secs. 4, 6, and 8 of the Occupational Safety and Health Act of 1970 (29 U.S.C. 653, 655, 657); Secretary of Labor's Order No. 12–71 (36 FR 8754), 8–76 (41 FR 25059), 9–83 (48 FR 35736), or 1–90 (55 FR 9033), as applicable, and 29 CFR part 1911.

§ 1910.183 Helicopters [Amended]

2. Remove and reserve paragraph (a) of § 1910.183.

Subpart R—Special Industries

1. The authority citation for subpart R is revised to read as follows:

Authority: Secs. 4, 6, and 8 of the Occupational Safety and Health Act of 1970 (29 U.S.C. 653, 655, 657); Secretary of Labor's Order No. 12–71 (36 FR 8754), 8–76 (41 FR 25059), 9–83 (48 FR 35736), or 1–90 (55 FR 9033), as applicable; and 29 CFR part 1911.

§ 1910.261 Pulp, Paper, Paperboard Mills [Amended]

2. Remove the following paragraphs in § 1910.261(a)(3): (ii), (iv) through (vi), (xi) through (xiii), (xv), (xvii) through (xix), (xx), (xxii), (xxiv) through (xxvii).

3. Remove and reserve paragraph (a)(3)(ix) of § 1910.261.

4. The following paragraphs in § 1910.261 are redesignated as follows:

a. Paragraph (a)(3)(iii) as paragraph (a)(3)(ii),

b. Paragraph (a)(3)(vii) as paragraph (a)(3)(iii),

c. Paragraph (a)(3)(viii) as paragraph (a)(3)(iv),

d. Paragraph (a)(3)(x) as paragraph (a)(3)(v),

e. Paragraph (a)(3)(xiv) as paragraph (a)(3)(vi),

f. Paragraph (a)(3)(xvi) as paragraph (a)(3)(vii),

g. Paragraph (a)(3)(xxi) as paragraph (a)(3)(viii),

h. Paragraph (a)(3)(xxiii) as paragraph (a)(3)(ix).

5. Remove paragraphs (b)(1) through (b)(3), (b)(5), and (b)(6) of § 1910.261.

6. Redesignate paragraph (b)(4) as paragraph (b)(1) and paragraph (b)(7) as paragraph (b)(2) of § 1910.261.

7. Remove the following paragraphs in § 1910.261(c): (2)(vi), (2)(vii), (6)(ii), and (7)(ii).

8. Remove and reserve the following paragraphs of § 1910.261(c): (3)(i), (8)(i), and (11).

9. The following paragraphs in § 1910.261 are redesignated as follows:

a. Paragraph (c)(2)(viii) as paragraph (c)(2)(vi),

b. Paragraph (c)(6)(i) as paragraph (c)(6),

c. Paragraph (c)7)(i) as paragraph (c)(7).

10. Remove and reserve paragraph (d)(1)(ii) of § 1910.261.

11. Remove and reserve paragraphs (e)(3), (e)(7), and (e)(9) of § 1910.261.

12. Remove paragraphs (g)(1)(iv) and (g)(2)(i) of § 1910.261.

13. Remove and reserve paragraphs (g)(15)(iv) and (g)(15)(vi) of § 1910.261.

14. The following paragraphs in § 1910.261 are redesignated as follows:

a. paragraph (g)(1)(v) to paragraph (g)(1)(iv),

b. paragraph (g)(2)(ii) to paragraph (g)(2)(i),

c. paragraph (g)(2)(iii) to paragraph (g)(2)(ii).

15. Remove and reserve paragraph (h)(2)(iii) of § 1910.261.

16. Remove paragraphs (j)(4)(ii), (j)(5)(iv) and (j)(6)(ii) of § 1910.261.

17. Remove and reserve paragraphs (j)(1)(iv) and (j)(3) of § 1910.261.

18. The following paragraphs in § 1910.261 are redesignated as follows:

a. Paragraph (j)(4)(iii) through paragraph (j)(4)(vi) as paragraph (j)(4)(ii) through paragraph (j)(4)(v),

b. Paragraph (j)(6)(iii) as paragraph (j)(6)(ii).

19. Remove paragraph (k)(2)(i) of § 1910.261, and redesignate paragraphs (k)(2)(ii) through (k)(2)(vi) as paragraphs (k)(2)(i) through (k)(2)(v), respectively.

20. Remove and reserve paragraphs (k)(4) and (k)(16) of § 1910.261.

21. Remove and reserve paragraphs (m)(2) and (m)(4) of § 1910.261.

22. Remove paragraphs (m)(5)(i) and (m)(5)(ii) of § 1910.261.

23. Redesignate paragraph (m)(5)(iii) of § 1910.261 as paragraph (m)(5), and add a heading to paragraph (m)(5) to read as follows: ''Unloading Cars''.

§ 1910.262 Textiles [Amended]

24. Remove and reserve paragraphs (c)(3), (c)(4), and (gg) of § 1910.262.

25. Remove paragraph (c)(8) of § 1910.262 and redesignate paragraph (c)(9) as paragraph (c)(8).

26. Remove and reserve paragraph (gg) of § 1910.262.

27. Remove paragraphs (ll)(1), (qq)(1), (qq)(2), and (rr) of § 1910.262.

28. Redesignate paragraph (ll)(2) of § 1910.262 as paragraph (ll).

§ 1910.265 Sawmills [Amended]

29. Remove paragraph (a)(2) of § 1910.265.

30. Redesignate paragraph (a)(1) of § 1910.265 as paragraph (a).

31. Remove and reserve paragraphs (c)(3)(i), (c)(10), (c)(11), (c)(14), and (c)(16) of § 1910.265.

32. Remove and reserve paragraph (c)(17) of § 1910.265.

33.–34. Remove and reserve paragraph (c)(22) of § 1910.265.

35. Remove paragraph (c)(24)(iv)(*a*) of § 1910.265 and redesignate paragraph (c)(24)(iv)(*b*) as paragraph (c)(24)(iv)(*a*).

36. Remove paragraph (c)(24)(iv)(*c*) of § 1910.265.

37. Remove and reserve paragraphs (c)(26)(i), (c)(30)(vi), (c)(30)(x), and (e)(3)(ii)(*d*) of § 1910.265.

38. Remove paragraphs (f)(9), (g), (h), and (i) of § 1910.265.

§ 1910.267 Agricultural operations [Removed]

39. Remove and reserve § 1910.267.

§ 1910.268 Telecommunications [Amended]

40. Remove and reserve paragraph (f) of § 1910.268.

Subpart Z—Toxic and Hazardous Substances

1. The authority citation for subpart Z is revised to read as follows:

Authority: Sections 4, 6, and 8 of the Occupational Safety and Health Act of 1970 (29 U.S.C. 653, 655, 657); Secretary of Labor's Order No. 12–71 (36 FR 8754), 8–76 (41 FR 25059), 9–83 (48 FR 35736), or 1–90 (55 FR 9033), as applicable; and 29 CFR part 1911.

All of subpart Z issued under sec. 6(b) of the Occupational Safety and Health Act, except those substances that have exposure limits listed in Tables Z–1, Z–2, and Z–3 of 29 CFR 1910.1000. The latter were issued under sec. 6(a) (29 U.S.C. 655(a)).

Section 1910.1018 is also issued under 29 U.S.C. 653.

§ 1910.1017 Vinyl chloride. [Amended]

2. In § 1910.1017, remove paragraphs (g)(5)(i) and (g)(5)(ii).

3. Redesignate paragraphs (g)(6) and (g)(7) of § 1910.1017 as paragraphs (g)(5) and (g)(6), respectively.

§ 1910.1018 Inorganic arsenic. [Amended]

4. In § 1910.1018, remove paragraph (n)(2)(ii)(C); redesignate paragraph (n)(2)(ii)(D) as (n)(2)(ii)(C); revise the reference in paragraph (n)(3)(i) that reads ''(n)(2)(ii)(A)(B) and (D)'' to read ''(n)(2)(ii)''; and revise paragraph (n)(3)(ii) to read as follows:

* * * * *

(n) * * *

(3) * * *

(ii) ''The employer shall provide the examinations specified in paragraphs (n)(2)(i) and (n)(2)(ii)(B) and (C) of this section at least semi-annually, and the x-ray requirement specified in paragraph (n)(2)(ii)(A) at least annually, for other covered employees.

* * * * *

5. In § 1910.1018, remove paragraphs (q)(2)(iii)(F), (q)(2)(iii)(G), and (q)(2)(iii)(H); and insert the word ''and'' after paragraph (q)(2)(iii)(D).

6. In § 1910.1018 Appendix A, in the middle of paragraph VI, revise the sentence beginning ''The medical examination must include * * *.'' to read as follows: ''The medical examination must include a medical history, a chest x-ray, a skin examination, and a nasal examination.'' Remove the sentence which begins ''The cytology exams are only included * * *.'' from paragraph VI.

7. In § 1910.1018 Appendix C, Section I, General, remove the words ''(4) A Sputum Cytology examination;'' redesignate paragraph (5) as paragraph (4); and remove the entire section entitled ''III. Sputum Cytology.''

§ 1910.1029 Coke oven emissions. [Amended]

8. In § 1910.1029, remove paragraph (j)(2)(vii) and redesignate paragraph (j)(2)(viii) as paragraph (j)(2)(vii).

9. In paragraph (j)(3)(i) 0f § 1910.1029, the reference ''(j)(2)(i)–(vi)'' is revised to read ''(j)(2)(i) and (j)(2)(iii)–(vii).''

10. In paragraph (j)(3)(ii) of § 1910.1029, the reference ''(j)(2)(i)–(viii)'' is revised to read ''(j)(2)(i) and (j)(2)(iii)–(vii).''

11. In paragraph (j)(3)(iii) of § 1910.1029, the reference ''(j)(2)(i)–(viii)'' is revised to read ''(j)(2)(i) and (j)(2)(iii)–(vii).''

12. In § 1910.1029, redesignate paragraph (j)(3)(iv) as paragraph (j)(3)(v), and add a new paragraph (j)(3)(iv) to read as follows:

* * * * *

(j) * * *

(3) * * *

(iv) The employer shall provide the x-ray specified in paragraph (j)(2)(ii) of this section at least annually for employees covered under paragraph (j)(3).

13. In § 1910.1029 Appendix A, paragraph VI is revised to read as follows:

* * * * *

VI. If you work in a regulated area at least 30 days per year, your employer is required to provide you with a medical examination every year. The medical examination must include a medical history, a chest x-ray, pulmonary function test, weight comparison, skin examination, a urinalysis and a urine cytology exam for early detection of urinary cancer. The urine cytology exam is only included in the initial exam until you are either 45 years or older or have 5 or more years employment in the regulated areas when the medical exams including this test, but excepting the x-ray exam, are to be given every six months; under these conditions, you are to be given an x-ray exam at least once a year. The examining physician will provide a written opinion to your employer containing the results of the medical exams. You should also receive a copy of this opinion.

14. In § 1910.1029 Appendix B, Section II, paragraph A is revised to read as follows:

A. General

The minimum requirements for the medical examination for coke oven workers are given in paragraph (j) of the standard. The initial examination is to be provided to all coke oven workers who work at least 30 days in the regulated area. The examination includes a 14″×17″ posterior-anterior chest x-ray reading and a ILO/UC rating to assure some standardization of x-ray reading, pulmonary function tests (FVC and FEV 1.0), weight, urinalysis, skin examination, and a urinary cytologic examination. These tests are needed to serve as the baseline for comparing the employee's future test results. Periodic exams include all the elements of the initial exams, except that the urine cytologic test is to be performed only on those employees who are 45 years or older or who have worked for 5 or more years in the regulated area; periodic exams, with the exception of x-rays, are to be performed semi-annually for this group instead of annually; for this group, x-rays will continue to be given at least annually. The examination contents are minimum requirements; additional tests such as lateral and oblique x-rays or additional pulmonary function tests may be performed if deemed necessary.

15. In § 1910.1029 Appendix B, Section II, the paragraphs entitled ''C. Sputum Cytology,'' are removed. B. It is proposed to amend part 1926 of 29 CFR as follows:

PART 1926—SAFETY AND HEALTH REGULATIONS FOR CONSTRUCTION

Subpart C—General Safety and Health Standards

1. The authority citation for subpart C is revised to read as follows:

Authority: Sec. 107, Contract Work Hours and Safety Standards Act (40 U.S.C. 333); secs. 4, 6, and 8, Occupational Safety and Health Act of 1970 (29 U.S.C. 653, 655, 657); Secretary of Labor's Order No. 12–71 (36 FR 8754), 8–76 (41 FR 25059), 9–83 (48 FR 35736), or 1–90 (55 FR 9033), as applicable; 29 CFR part 1911.

§ 1926.31 Incorporation by Reference. [Amended]

2. In § 1926.31, revise paragraph (a) to read as follows:

(a) The standards of agencies of the U.S. Government and organizations which are not agencies of the U.S. Government which are incorporated by reference in this part, have the same force and effect as other standards in this part. Only the mandatory provisions (i.e., provisions containing the word ''shall'' or other mandatory language) of standards incorporated by reference are adopted as standards under the Occupational Safety and Health Act.

Subpart D—Occupational Health and Environmental Controls

1. The authority citation for subpart D is revised to read as follows:

Authority: Sec. 107, Contract Work Hours and Safety Standards Act (40 U.S.C. 333); secs. 4, 6, and 8, Occupational Safety and Health Act of 1970 (29 U.S.C. 653, 655, 657); Secretary of Labor's Order No. 12–71 (36 FR 8754), 8–76 (41 FR 25059), 9–83 (48 FR 35736), or 1–90 (55 FR 9033), as applicable; 29 CFR part 1911.

§ 1926.50 Medical services and first aid [Amended]

2. In § 1926.50, revise paragraph (d)(1) to read as follows:

* * * * *

(d) First-aid supplies shall be easily accessible when required.

* * * * *

3. In § 1926.50, revise paragraph (f) to read as follows:

* * * * *

(f) In areas where 911 is not available, the telephone numbers of the physicians, hospitals, or ambulances shall be conspicuously posted.

* * * * *

Subpart F—Fire Protection and Prevention

1. The authority citation for subpart F is revised to read as follows:

Authority: Sec. 107, Contract Work Hours and Safety Standards Act (40 U.S.C. 333); secs. 4, 6, and 8, Occupational Safety and Health Act of 1970 (29 U.S.C. 653, 655, 657); Secretary of Labor's Order No. 12–71 (36 FR 8754), 8–76 (41 FR 25059), 9–83 (48 FR 35736), or 1–90 (55 FR 9033), as applicable; 29 CFR part 1911.

§ 1926.152 Flammable and combustible liquids [Amended]

2. In § 1926.152, revise paragraph (a)(1) to read as follows:

(a) * * * (1) Only approved containers and portable tanks shall be used for storage and handling of flammable and combustible liquids. Approved safety cans or Department of Transportation approved containers shall be used for the handling and use of flammable liquids in quantities of 5 gallons or less, except that this shall not apply to those flammable liquid materials which are highly viscid (extremely hard to pour), which may be used and handled in original shipping containers. For quantities of one gallon or less, the original container may be used for storage, use, and handling of flammable liquids.

* * * * *

Subpart U—Blasting and Use of Explosives

1. The authority citation for subpart U is revised to read as follows:

Authority: Sec. 107, Contract Work Hours and Safety Standards Act (40 U.S.C. 333); secs. 4, 6, and 8, Occupational Safety and Health Act of 1970 (29 U.S.C. 653, 655, 657); Secretary of Labor's Order No. 12–71 (36 FR 8754), 8–76 (41 FR 25059), 9–83 (48 FR 35736), or 1–90 (55 FR 9033), as applicable; 29 CFR part 1911.

§ 1926.906 Initiation of explosive charges—electric blasting [Amended]

2. In § 1926.906, revise paragraph (q) to read as follows:

* * * * *

(q) Blasters, when testing circuits to charged holes, shall use only blasting galvanometers or other instruments that are specifically designed for this purpose.

* * * * *

[FR Doc. 96–18268 Filed 7–19–96; 8:45 am]

BILLING CODE 4510–26–P

DEPARTMENT OF THE INTERIOR

Minerals Management Service

30 CFR Part 206

RIN 1010–AC02

Amendments to Gas Valuation Regulations for Federal Leases

AGENCY: Minerals Management Service, Interior.

ACTION: Proposed rule; notice of extension of public comment period.

SUMMARY: The Minerals Management Service (MMS) hereby gives notice that it is extending the public comment period on a Notice of reopening of public comment period, which was published in the Federal Register on May 21, 1996 (61 FR 25421). The proposed rule would amend the regulations governing the valuation for royalty purposes of natural gas produced from Federal leases. In response to requests for additional time, MMS will extend the comment period from July 22, 1996, to August 19, 1996.

DATES: Comments must be received by 4 p.m. Mountain daylight time on August 19, 1996.

ADDRESSES: Written comments should be sent to the Minerals Management Service, P.O. Box 25165, Mail Stop 3101, Denver, Colorado 80225–0165; courier address: Building 85, Denver Federal Center, Denver, Colorado 80225–0165, Attention: David S. Guzy.

FOR FURTHER INFORMATION CONTACT: David S. Guzy, Chief, Rules and Procedures Staff, telephone (303) 231–3432 or (FTS) 231–3432.

Dated: July 15, 1996.

James W. Shaw,

Associate Director for Royalty Management.

[FR Doc. 96–18473 Filed 7–18–96; 8:45 am]

BILLING CODE 4310–MR–P

DEPARTMENT OF DEFENSE

Department of the Army

32 CFR Part 651

Environmental Analysis of Army Actions

AGENCY: Department of the Army; Defense.

ACTION: Proposed rule.

SUMMARY: This proposed rule would revise Army Regulation 200–2, which is the Army's implementing regulation for the National Environmental Policy Act of 1969 (NEPA). Major changes are an expanded list of categorical exclusions, clear separation of the Comprehensive Environmental Response, Compensation, and Liability Act (CERCLA) and NEPA, and delegation of authority to approve environmental impact statements (EIS).

DATES: To be given full consideration, comments must be received no later than August 21, 1996.

ADDRESSES: Written comments should be sent to: Headquarters, Department of the Army, ATTN: DAIM-ED (Mr. Timothy Julius), 600 Army Pentagon, Washington, DC 20310–0600.

FOR FURTHER INFORMATION CONTACT: Timothy P. Julius, (703) 693–0543.

SUPPLEMENTARY INFORMATION: This proposed regulation establishes policies and responsibilities for assessing the effects of Army actions. It supplements Council on Environmental Quality (CEQ) regulations for implementing the procedural provisions of NEPA (40 CFR parts 1500–1508). The last major revision to this regulation was in December 1988. Since that time, initiatives such as the National Performance Review have tended to streamline the Federal Government through decentralization, reduction and simplification of regulations, and management of risk. This revision strives to meet the spirit of the National Performance Review, and Executive Order (EO) 12861, Elimination of One-Half of Executive Branch Internal Regulations, dated September 11, 1993. This proposed regulation incorporates emerging issues such as Environmental Justice (EO 12898, Federal Actions to Address Environmental Justice in Minority Populations and Low-Income Populations, dated February 11, 1994) and Community Right-to-Know (EO 12856, Federal Compliance with Right-to-Know Laws and Pollution Prevention Requirements, dated August 3, 1993). The list of categorical exclusions has been expanded to include a more comprehensive array of actions routinely performed by the Army which have minimal or no individual or cumulative effect on environmental quality. This is intended to better focus on actions that warrant the expenditure of time and resources for analysis and formal documentation. The authority to approve environmental impact statements has been delegated to Commanders of Major Commands (primarily for Installations), and Program Executive Officers and Commanders of Major Subordinate Commands with Milestone Decision Authority (for acquisition and development programs). The purpose of delegation of approval authority for EISs is to empower the officials who are responsible for accomplishing the work. This empowerment will compel the decision makers to take more complete ownership of their actions, and makes the NEPA process an integral, rational part of Army decision making processes. CERCLA and NEPA are clearly separated in recognition of the Department of Justice's opinion with regard to the application of NEPA to CERCLA cleanups, and to eliminate potential duplication of effort. Procedural Requirements: This regulation does not involve the collection of information and is therefore not subject to the provisions of the Paperwork Reduction Act. This rule contains no policies that have Federalism implications under EO 12612, Federalism, dated October 26, 1987. This proposed rule is not a major rule pursuant to EO 12291, Federal Regulation, dated February 17, 1981, therefore a Regulatory Flexibility Analysis is not require(d) This is not a significant regulatory action pursuant to EO 12866, Regulatory Planning and Review, dated September 30, 1993. This regulation meets the standards of Sec. 2(b)(2) of EO 12778, Civil Justice Reform, dated October 23, 1991.

List of Subjects in 32 CFR Part 651

Environmental impact statement, Environmental protection, Natural resources.

The Proposal

Accordingly, it is proposed to revise 32 CFR part 651 to read as follows:

PART 651–ENVIRONMENTAL EFFECTS OF ARMY ACTIONS (AR 200–2)

Sec.

Subpart A—Introduction

651.1 Applicability.
651.2 Purpose.
651.3 Definitions.
651.4 Responsibilities.
651.5 Policies.

Subpart B-National Environmental Policy Act of 1969 (NEPA) and the Decision Processes

651.6 Introduction.
651.7 Actions Requiring Evaluation.
651.8 Exemptions, Exceptions, and Emergency Procedures.
651.9 Integration with Army Planning.
651.10 Classified Actions.

Subpart C-Required Records and Documents

651.11 Environmental Assessment (EA).
651.12 Finding of No Significant Impact (FONSI).
651.13 Notice of Intent (NOI).
651.14 Environmental Impact Statement (EIS).
651.15 Record of Decision (ROD).
651.16 Notice of Availability (NOA).
651.17 Notice of Availability of Weekly Receipts of EISs (NWR).
651.18 Record of Environmental Consideration (REC).

Part D—Categorical Exclusions (CXs)

651.19 General.
651.20 Determining when to use a CX.
651.21 List of Categorical Exclusions (CXs).

Part E—Environmental Assessment (EAs)

651.22 Conditions and Actions Normally Requiring an EA.
651.23 EA Format.
651.24 Finding of No Significant Impact (FONSI).
651.25 Review and Approval of EAs and FONSIs.
651.26 Public Involvement.
651.27 Mitigation and Implementation Plan.

Part F—Environmental Impact Statements (EISs)

651.28 Introduction.
651.29 Conditions Requiring an EIS.
651.30 Actions Normally Requiring an EIS.
651.31 EIS Format.
651.32 Approval Authority.
651.33 Notice of Intent (NOI).
651.34 Scoping.
651.35 Preparation and Processing of the Draft Environment Impact Statement (DEIS).
651.36 Public Review of the DEIS.
651.37 Preparation of the Final Environmental Impact Statement (FEIS).
651.38 Decision.
651.39 Supplemental EISs (SEISs).
651.40 The Army as a Cooperating Agency.

Authority: National Environmental Policy Act of 1969 (NEPA), 42 U.S.C. 4321 et seq. Council on Environmental Quality Regulations, 40 CFR part 1500–1508, 43 FR 55978–56007, November 29, 1978, as amended at 51 FR 15625, April 25, 1986, and Executive Orders 11988, 11990, 12114, 12856, 12898.

Subpart A—Introduction

§ 651.1 Applicability.

This regulation applies to pertinent functions of the Active Army and Army Reserve, to functions of the Army National Guard (ARNG) involving Federal funding, and to functions for which the Army is the DoD executive agent. It does not apply to Civil Works functions. This regulation applies to relevant actions within the United States, which is defined as all States, the District of Columbia, territories, and possessions of the United States; and all waters and airspace subject to the territorial jurisdiction of the United States. The territories and possessions of the United States include the Virgin Islands, American Samoa, Wake Island, Midway Island, Guam, Palmyra Island, Johnston Atoll, Navassa Island, and Kingman Reef. This regulation also applies to actions in the Commonwealth of Puerto Rico, the Commonwealth of the Northern Marianas, and the Republic of the Marshall Islands.

§ 651.2 Purpose.

(a) Environmental Analysis of Army Actions is the Army's implementing regulation for the National Environmental Policy Act of 1969 (NEPA). This regulation sets forth the Army's policies and responsibilities for the early integration of environmental considerations into Army planning and decision making processes.

(b) This regulation establishes criteria to determine which Army actions normally require preparation of an Environmental Assessment (EA) or an Environmental Impact Statement (EIS), and lists Army actions that are categorically excluded from the requirements to prepare an EA or EIS.

(c) This regulation supplements the Code of Federal Regulations (40 CFR parts 1500–1508), and must be read in conjunction with it.

§ 651.3 Definitions.

(a) *Proponent.* The proponent is the Army office, DoD or non-DoD Federal agency, state or local agency, organization, or individual that proposes an action requiring Army approval.

(b) *Decision maker.* The decision maker is the Army official who has the primary authority to approve NEPA documents, make decisions, and commit government resources to a course of action.

(c) *Program, Product, and Project Managers.* Managers of Acquisition Categories (ACAT) I, II, III, & IV programs as defined by Department of Defense Instruction (DoDI) 5000.2.

(d) *Major Decision Point.* Review points in the development of a project/program at which decisions are made whether to proceed. For the acquisition process, these would be the major milestones as defined in DoD Instruction 5000.2.

§ 651.4 Responsibilities.

(a) The Secretary of the Army (SA) has designated the Assistant Secretary of the Army (Installations, Logistics and Environment) (ASA(IL&E)) as the Army's responsible official for NEPA matters.

(b) The Assistant Secretary of the Army (Research, Development, and Acquisition) will:

(1) In conjunction with the Assistant Secretary of the Army (Installations, Logistics, and Environment), manage the environmental compliance of materiel systems.

(2) Develop and implement a process to prepare, review, approve, and catalog NEPA documents for the acquisition and development of Army materiel.

(c) The Deputy Chief of Staff for Operations and Plans (DCSOPS) will assign proponent responsibilities as required when multiple MACOM or Headquarters offices are involved in a proposal.

(d) The Assistant Chief of Staff for Installation Management (ACSIM) is responsible for coordinating and monitoring NEPA activities within the Army. The Environmental Programs Directorate is the Army Staff (ARSTAF) point of contact (POC) for environmental matters.

(e) The Director of Environmental Programs will—

(1) Assist Army agencies in completing environmental analysis and documentation.

(2) Review, as requested, environmental documents submitted by Army, other DoD components, and other Federal agencies.

(3) Monitor proposed Army policy and program documents that have environmental implications to determine compliance with NEPA requirements and to ensure integration of environmental considerations into the decision making process.

(4) Maintain liaison with the Office of the Secretary of Defense, Office of Management and Budget, Council on

Environmental Quality (CEQ), Environmental Protection Agency (EPA), and other Federal, state, and local agencies on environmental policies that may affect the Army. This liaison assists in identifying and evaluating applicable regulatory policies for proposed actions.

(f) The Assistant Secretary of the Army (Financial Management) will develop requirements for environmental budget exhibits and displays of data in support of annual authorization and appropriation requests.

(g) The General Counsel (GC) provides legal advice to the Secretary of the Army on all environmental matters, to include interpretation and compliance with NEPA and implementing regulations.

(h) The Judge Advocate General (TJAG) will provide legal advice and assistance in interpretation of NEPA and Federal implementing regulations, and other applicable statutes.

(i) The Surgeon General will review, as requested, the health and welfare aspects of proposals.

(j) The Chief of Public Affairs will:

(1) Provide guidance on issuing public announcements such as Findings of No Significant Impact (FONSI), Notices of Intent (NOI), scoping procedures, Notices of Availability (NOA), and other public involvement activities.

(2) Review and coordinate planned announcements on actions of national interest with appropriate ARSTAF elements and the Assistant Secretary of Defense for Public Affairs (OASD (PA)).

(3) Assist in the issuance of appropriate press releases to coincide with the publication of notices in the Federal Register.

(k) The Chief of Legislative Liaison will notify members of Congress of impending proposed actions of national concern or interest. The Chief will—

(1) Provide guidance on issuing congressional notifications on actions of national concern or interest.

(2) Review planned congressional notifications on actions of national concern or interest.

(3) Prior to and in concert with the issuance of press releases and publications in the Federal Register, assist in the issuance of congressional notifications on actions of national concern or interest.

(l) Commanders of Major Army Commands (MACOM), the Chief, National Guard Bureau, and the U.S. Army Reserve Commander will—

(1) Monitor proposed actions and programs within their commands to ensure compliance with this regulation.

(2) Task the appropriate proponent with funding and preparation of NEPA documents and development of public involvement activities.

(3) Ensure that the proponent initiates the preparation of necessary environmental documentation and assesses the environmental consequences of proposed programs and projects early in the planning process.

(4) Assist in the review of environmental documents prepared by DoD and other Army or Federal agencies, as requested.

(5) Establish and maintain the capability (personnel and other resources) to comply with the requirements of this regulation.

(6) Maintain official record copies of all environmental documents for which they are the staff proponent.

(7) Provide coordination with HQDA for proposed actions of national interest.

(8) Approve environmental impact statements and associated documents (NOI, NOA, ROD) for actions under their purview.

(9) Office of the Chief of the National Guard Bureau is responsible for approving all Federal environmental documents prepared by all Army National Guard activities.

(m) Major Subordinate Commands, Installations (Base Operations (BASEOPS) Army Reserve Command (ARCOM), activity (facility), unit (non-BASEOPS Major U.S. Army Reserve Command (MUSARC) commanders and The Adjutants General (TAG) will:

(1) Monitor proposed actions and programs within their commands to ensure compliance with this regulation.

(2) Task the appropriate proponent with funding and preparation of NEPA documents and development of public involvement activities.

(3) Ensure that the proponent initiates the preparation of necessary environmental documentation and assesses the environmental consequences of proposed programs and projects early in the planning process.

(4) Assist in the review of environmental documents prepared by DoD and other Army or Federal agencies, as requested.

(5) Establish and maintain the capability (personnel and other resources) to comply with the requirements of this regulation.

(6) Maintain official record copies of all environmental documents for which they are the staff proponent.

(7) Provide coordination for proposed actions of national interest.

(8) Approve environmental documents for actions under their purview (does not include TAG).

(n) The Army Acquisition Executive (AAE) will:

(1) Administer acquisition programs to ensure compliance with all applicable environmental laws, executive orders, and regulations.

(2) Ensure that life cycle environmental costs are an integral part of system life cycle cost estimates.

(o) Program Executive Officers (PEO) and direct-reporting PMs will:

(1) Supervise assigned programs, projects, and products to ensure that they comply with all applicable environmental laws, executive orders, and regulations.

(2) Ensure that environmental considerations are integrated into assigned systems planning process and systems engineering process.

(3) Approve environmental impact statements and associated documents (NOI, NOA, ROD) for actions under their purview.

(p) Program, Project, and Product Managers will:

(1) Manage compliance with all applicable environmental laws, executive orders, and regulations for assigned programs, projects, and products.

(2) Integrate environmental considerations into the systems planning process and systems engineering process.

(3) Apply policies and procedures set forth in this regulation to programs and actions within their organizations and staff responsibility.

(4) Initiate the preparation of environmental documentation and assess the environmental consequences of proposed programs and projects.

(5) Establish and maintain the capability (personnel and other resources) to comply with the requirements of this regulation.

(6) Prepare and maintain the official record copy of all environmental documents for which they are the proponent.

(q) Proponents at all levels will:

(1) Ensure that NEPA documents are prepared and staffed to the satisfaction of the decision maker.

(2) Ensure accuracy and adequacy of environmental impact analyses and documents regardless of the author.

(3) Adequately fund and implement the decision.

§ 651.5 Policies

(a) DA policy is to balance military mission activities, including materials and industrial processes, with the capabilities of the installations and surrounding communities. Decision makers will be cognizant of the impact of their decisions upon the environment, and will reduce undue and unnecessary adverse impacts to the extent feasible.

(b) When appropriate, environmental documentation to consider operations

security principles and procedures described in AR 530–1 will be reviewed and documented on the cover sheet or signature page.

(c) Environmental analyses and associated investigations are advanced project planning, and will be funded from other than military construction (MILCON) funds. Operations and Maintenance/Operation and Maintenance, ARNG (OMA/OMAR), Research, Development, Test, and Evaluation (RDTE) or other operating funds are the proper sources of funds for analysis and documentation. Alternative funds will be identified for environmental documentation, monitoring, and other required studies as part of the MILCON approval process.

(d) Costs of design and construction mitigation measures required as a direct result of MILCON projects will be paid from MILCON funds if included in the cost estimate and description of work on DD Form 1391.

(e) Ongoing Army activities require an environmental analysis when significant new circumstances warrant consideration of changing the activity. For example, the listing of a new species as endangered may indicate, per consultation under the Endangered Species Act, the modification of a training regime or major modification of an existing weapons system.

(f) Environmental analyses will reflect due consideration of non-statutory environmental issues implemented by Federal and DoD plans and standards. Potential issues will be discussed and critically evaluated during scoping and other public involvement processes. Some examples are the issues articulated in Executive Order 12898, Federal Actions to Address Environmental Justice in Minority Populations and Low-Income Populations; and Executive Order 12856, Federal Compliance with Right-to-Know Laws and Pollution Prevention Requirements.

(g) Consideration of the environment for decisions involving activities outside the United States (see Applicability) will be accomplished pursuant to Executive Order No. 12114, host country final governing standards, and DoD Directives and Instructions.

Subpart B—The National Environmental Policy Act of 1969 (NEPA) and Decision Processes

§ 651.6 Introduction.

(a) NEPA establishes broad Federal policies and goals for the protection of the environment. Section 102(2) contains procedural requirements directed toward the attainment of such goals.

(b) The NEPA process is the systematic examination of probable environmental consequences of implementing a proposed action and reasonable alternatives. To be effective, integration of the NEPA process with other Army project planning will occur at the earliest possible time to ensure that:

(1) Planning and decision making reflect environmental values.

(2) Policies listed in paragraph 1–5 are implemented.

(3) Delays and potential conflicts in the process are minimized.

(4) Evaluation of environmental effects, values and issues is in sufficient detail for consideration concurrently with economic, technical, and mission-related analyses. When EISs are undertaken, the economic and social impacts will be included in the analysis of total environmental impacts. However, economic and social impacts alone (i.e., without accompanying natural or physical impacts) do not necessitate the preparation of an environmental document for an Army action.

§ 651.7 Actions requiring evaluation.

The general types of proposed actions to evaluate for environmental impact include:

(a) Management and operational concepts and programs, including such areas as logistics, research, development, test and evaluation, procurement, and real property and facility management.

(b) Projects, including facilities construction, research and development for weapons, vehicles, and other equipment or activities.

(c) Operations, including individual and unit training, flight operations, overall operation of installation, or facility test and evaluation programs.

(d) Licenses for operations or special material use, including Nuclear Regulatory Commission (NRC) license, an Army radiation authorization, or Federal Aviation Administration (FAA) Air Space request.

(e) Materiel development, acquisition, and/or transition.

(f) Research and development, including such areas as genetic engineering, laser testing, and electromagnetic pulse generation.

(g) Actions supported through Federal contracts, grants, subsidies, loans, or other forms of funding such as Government Owned-Contractor Operated (GOCO) industrial plants and construction of family housing via third party contracting (Section 801/802 Housing, Military Appropriations Act of 1984).

(h) Leases, easements, permits, licenses, certificates, or other entitlement for use.

(i) Environmental Remediation/Restoration projects not addressed in paragraph 2–3(b) below.

§ 651.8 Exemptions, exceptions, and emergency procedures.

(a) Exemption by Law. The law must apply to DoD and/or Army and must prohibit, exempt, or make impossible full compliance with the procedures of NEPA (40 CFR 1500.6).

(b) Environmental Remediation/Restoration projects implemented in accordance with the Comprehensive Environmental Response, Compensation, and Liability Act (CERCLA) shall not be assessed under NEPA.

(c) Emergencies.

(1) In the event of an emergency, the Army may be required to take immediate actions that have environmental impacts. These immediate actions are necessary to promote national defense or security, or to protect life or property. In such cases, the HQDA proponent will notify the Environmental Programs Directorate, which in turn will notify the Assistant Secretary of the Army for Installations, Logistics and Environment (ASA (I,L&E)), who will coordinate with the Deputy Under Secretary of Defense (Environmental Security) (DUSD(ES)) and CEQ regarding actions necessary to control the immediate effects of the emergency. In no event will the Army delay an emergency action necessary for national defense, security, or preservation of human life or property to comply with this regulation or the CEQ Regulations. Call-ups of the ARNG during state emergencies are state actions excluded from the requirements of this regulation.

(2) These notifications and consultations apply only to actions necessary to control immediate effects of the emergency; other actions remain subject to NEPA review (40 CFR 1506.11).

§ 651.9 Integration with Army Planning.

(a) Environmental considerations will be integrated into the Army's decision making processes to ensure that:

(1) The planning process identifies major decision points for principal programs and proposals that are likely to have an effect on the environment.

(2) Decision makers are informed of and consider the environmental consequences at the same time as other factors such as mission requirements and cost.

(3) Environmental documents accompany the proposal through the existing Army review and decision making processes. The Army will integrate NEPA requirements with other planning and environmental review procedures.

(4) The alternatives considered in the decision are within the range of alternatives analyzed in relevant environmental documents.

(b) Proponents are responsible for providing funds for NEPA documentation, and for implementation of decisions including mitigations (regardless of the level of NEPA analysis).

(c) The Army acquisition community will integrate environmental analyses into its decision making process and will further ensure that appropriate environmental life cycle costs become an integral part of total program cost estimates and budgets. PEOs, and Program, Product, and Project Managers will integrate the NEPA process along with other program planning at the earliest possible time to ensure that acquisition planning and decisions reflect environmental values and considerations. During the planning process, materiel acquisition proponents will, as early as possible, determine the type of environmental analyses that will be required throughout the life cycle of their assigned program and identify appropriate funding.

§ 651.10 Classified actions.

(a) For proposed actions and environmental documents involving classified information, AR 380–5 will be followed.

(b) Classification does not relieve a proponent of the requirement to assess and document the environmental effects of a proposed action.

(c) For cases where classified information can be reasonably separated from other information, and a meaningful environmental analysis produced, unclassified documents will be prepared and processed in accordance with this regulation. Classified portions will be kept separate and provided to reviewers and decision makers in accordance with AR 380–5.

(d) For cases where classified information is such an integral part of the analysis of a proposal that a meaningful unclassified environmental document cannot be produced, the proponent, in consultation with the appropriate security and environmental offices, will form a team to review classified environmental documents.

Subpart C—Army NEPA and NEPA-Related Documents

§ 651.11 Environmental Assessment (EA).

The EA provides the proponent, the public, and the decision maker with sufficient evidence and analysis for determining whether environmental impacts are significant. The EA ensures compliance with NEPA when an environmental impact statement (EIS) is not required and a categorical exclusion (CX) is inappropriate, and facilitates preparation of an EIS if required.

§ 651.12 Finding of No Significant Impact (FONSI).

The FONSI is a decision document that briefly states why an action will not significantly affect the environment, and that an EIS will not be prepare(d). The FONSI includes a summary of the EA and notes any related environmental documents. If the EA is attached, the FONSI need not repeat any of the EA discussion, but may incorporate it by reference.

§ 651.13 Notice of Intent (NOI).

The NOI is a notice published by the Army in the Federal Register to inform the public that an EIS will be prepare(d). An NOI may also be prepared for environmental assessments involving actions of national interest.

§ 651.14 Environmental Impact Statement (EIS).

The EIS is a public document designed to ensure that NEPA policies and goals are incorporated early into the programs and actions of Federal agencies. An EIS is intended to provide a full, open, and balanced discussion of significant environmental impacts. Along with other project documentation, the EIS provides a basis for informed decision making.

§ 651.15 Record of Decision (ROD).

The ROD is a concise public record of the decision and rationale following completion of an EIS.

§ 651.16 Notice of Availability (NOA).

The NOA is a notice published by the Army in the Federal Register to inform the public that an environmental document is available for review. An NOA may be published for draft and final EISs (including supplements), and will be published for RODs with national interest. An NOA will also be published for environmental assessments of national interest. This agency NOA should not be confused with EPA's notice of availability of weekly receipts of EISs (NWR).

§ 651.17 Notice of Availability of Weekly Receipts of EISs (NWR).

This notice is published by the EPA and officially begins the public review periods. The NWR is published each Friday, and lists the EISs that were filed the *previous* week.

§ 651.18 Record of Environmental Consideration (REC).

A REC briefly describes the proposed action, identifies the proponent and approving officials(s), and records the analysis for the use of categorical exclusions (CX) that require such documentation. There is no required format of a REC as long as the information above is included.

Subpart D—Categorical Exclusions (CXs)

§ 651.19 General.

(a) Categorical exclusions are categories of actions with no significant individual or cumulative effect on the human environment, and for which neither an EA nor EIS is require(d). The use of a CX is intended to reduce paperwork and eliminate delays in the initiation and completion of proposed actions.

(b) Army installations and materiel developers are required to prepare many types of management plans that should be environmentally assessed (e.g., capital investment strategy, historic preservation, natural resources etc.). In cases where activities are adequately assessed as part of these normal planning processes, CXs should be needed only infrequently to cover unanticipated proposals.

§ 651.20 Determining when to use a CX.

(a) To use a CX, the proponent must:

(1) Identify a CX (or multiple CXs) that encompasses the proposed action.

(2) Ensure that the action has not been segmented to meet the definition of a CX. This means that the whole proposal must be considered (e.g., the operations of a construction project must be taken into account).

(3) Apply the following screening criteria to determine if the action involves extraordinary circumstances which would preclude the use of a CX:

(i) Potential to adversely effect public health, safety or the environment.

(ii) Possible significant cumulative effects, direct or indirect.

(iii) Impose uncertain or unique risks.

(iv) Greater scope or size than is normal for this category of action.

(v) Reportable releases of hazardous or toxic substances as specified by Section 102 of the Comprehensive Environmental Response Compensation and Liability Act (CERCLA).

(vi) Discharges of petroleum, oils, and lubricants (POLs) or radioactive substances.

(vii) Generation of noise which causes the existing C-weighted day-night levels (CDNL) 62 dB or A-weighted day-night levels (ADNL) 65 dB noise contours to expand within or into noise sensitive land use areas. Generation of noise which increases the CDNL or ADNL in noise sensitive land uses by more than 1.5 dB.

(viii) When air emissions exceed de minimis levels and a formal Clean Air Act conformity determination is required.

(ix) Potential to violate any Federal, state, or local environmental law, regulation, or ordinance.

(x) More than minor, or unresolved adverse effect on environmentally sensitive resources.

(b) Environmentally sensitive resources include:

(1) Federally listed candidate, threatened, or endangered species or their habitats;

(2) Properties listed on or eligible for the National Register of Historic Places;

(3) Areas having special designation or recognition such as prime or unique agricultural lands off Army property; coastal zones; designated wilderness or wilderness study areas; wild and scenic rivers; national landmarks; 100-year floodplains; wetlands; sole source aquifers which are potential sources of drinking water; refuges; parks; or other areas of high environmental sensitivity;

(4) Sacred sites (IAW American Indian Religious Freedom Act).

(c) The use of a CX does not relieve the proponent from compliance with other statutes, such as consultations under the Endangered Species Act or the National Historic Preservation Act. Such consultations may be required to determine the applicability of screening criteria.

§ 651.21 List of Categorical Exclusions (CXs).

(a) For convenience only, the CXs are listed under common types of activities (e.g., administration/operation, construction/demolition, and repair and maintenance). Certain CXs require a REC, which will be completed and signed by the proponent. Concurrence on the use of a CX by the installation environmental coordinator (EC) or other appropriate EC (e.g., MSC or MACOM) is required. The list of CXs is subject to continual review and modification. Requests for additions or changes to the CXs should be sent to the Environmental Programs Directorate. Subordinate Army headquarters may not modify the CX list through supplements to this regulation. The proposed modifications to the list of CXs will be published in the Federal Register by HQDA to provide an opportunity for public comment.

(b) Administration/Operation Activities:

(1) Routine law and order activities performed by military/military police and physical plant protection and security personnel.

(2) Preparing, revising, or adopting regulations, instructions, directives, and plans that implement, without substantial change, regulations, instructions, directives.

(3) Routine operation of existing facilities and laboratories.

(4) Normal fiscal, administrative, recreation and welfare activities.

(5) Reductions in force and unit redesignations.

(6) Routine activities of personnel and equipment in facilities which are compatible with the existing uses.

(7) Deployment of military units on a temporary duty (TDY) or training basis where existing facilities are used for their intended purposes.

(8) Administrative personnel-related studies.

(9) Non-construction activities in support of other agencies/organizations involving community participation projects and law enforcement activities.

(10) Routine military ceremonies, funerals, and concerts. Special events such as State-funerals, to include flyovers.

(11) Routine administrative reorganizations and consolidations.

(12) Actions which fall under another Federal agency's list of categorical exclusions when the other Federal agency is the lead agency and the Army is the cooperating agency (REC required).

(c) Construction and Demolition:

(1) Construction of an addition to an existing structure or facility, and new construction which does not involve more than 5.0 cumulative acres of new surface disturbance. New construction does not include facilities for the transportation, distribution, use, storage, treatment, and disposal of solid waste, medical waste, and hazardous waste (REC required).

(2) Demolition and disposal of buildings, structures, or other improvements, or removal of part thereof for demolition and disposal in accordance with applicable regulations, including those regulations applying to removal of asbestos, polychlorinated biphenyls (PCBs), lead base paint, and other hazardous materials (REC required).

(3) Road and trail construction that involves no more than 5.0 acres of new surface disturbance.

(d) Cultural and Natural Resource Management Activities:

(1) Routine maintenance of timber stands, including tree removal and pruning.

(2) Timber harvest activities which remove 250,000 board feet or less of merchantable wood products or salvage as a negotiated timber sale (REC required).

(3) Land regeneration activities of native trees and vegetation, including site preparation (REC required).

(4) Routine maintenance of streams (in accordance with U.S. Army Corps of Engineers' permit authority under Section 404 of the Clean Water Act and applicable state and local permits), and erosion control and storm water control structures in accordance with management plans.

(5) Policy and control measures for pest control/removal in accordance with pest management plans (REC required).

(6) Hunting and fishing policies or regulations that are consistent with State and local regulations.

(7) Studies, data collection, and information gathering which does not involve major surface disturbance. Examples include topographic surveys, bird counts, wetland mapping, and other resources inventories.

(8) Routine maintenance of fish and wildlife habitat.

(9) Routine monitoring of fish and wildlife populations. Examples include radio collaring, gill netting and counts.

(10) Reintroduction of endemic or native species (other than endangered or threatened species) into historic habitat (REC Required).

(11) Maintenance of existing archaeological and historical avoidance markers, fencing, and signs.

(12) Archaeological surveys, inventories, and minor field excavations.

(e) Procurement and Contract Activities:

(1) Routine procurement of goods and services, including routine utility services and contracts for services and goods.

(2) Acquisition, installation, and operation of utility and communication systems, data processing cable and similar electronic equipment which use existing right-of-way, easement, distribution systems, and/or facilities (REC required).

(3) Conversion of commercial activities under the provisions of Army Regulation 5–20.

(4) Modification, product improvement, or configuration

engineering design change to materiel, structure or item that does not change the original impact of the materiel, structure or item on the environment (REC required).

(5) Procurement, testing, use, and/or conversion of a commercial product (e.g., forklift, generator, chain saw, etc.) which does not meet the definition of a weapon system (Part 15, DoDI 5000.2), and does not result in any unusual disposal problem.

(f) Real Estate Activities:

(1) Grants, acquisitions, and renewal of easements for the use of existing rights-of-way for use by vehicles; electrical, telephone, and other transmission and communication lines; transmitter and relay facilities; water, wastewater, stormwater, irrigation pipelines, pumping stations, and facilities; and for similar public utility and transportation uses (REC required).

(2) Grants, acquisitions, and renewal or termination of leases, licenses, agreements, and permits for use of real property for its intended uses. Examples include, but are not limited to the following: existing Army controlled property and Army leases of civilian property for its intended uses to include leases of classroom, office, or warehouse space leased by a unit for that purpose (REC required).

(3) Disposal of excess easement areas to the underlying fee owner (REC required).

(4) Transfer of real property to or from another military department, or other Federal agency if there is no intended or anticipated significant land use change (REC required).

(5) Transfer of installation utilities to a commercial or governmental utility.

(6) Acquisition and disposal of land not to exceed 40 acres; includes facilities on site (REC required).

(7) Timber harvest activities which remove 250,000 board feet or less of merchantable wood products or salvage as part of an otherwise categorically excluded real estate transaction or other activity (REC required).

(g) Repair and Maintenance Activities:

(1) Routine repair and maintenance of buildings, airfields, grounds, equipment, and other facilities. Examples include, but are not limited to: Removal and disposal of asbestos-containing material (e.g., roof material and floor tile) or lead based paint, and repair of roofs, doors, windows, or fixtures.

(2) Routine repairs and maintenance of roads, trails, and firebreaks. Examples include, but are not limited to: grading and clearing the roadside of brush with or without the use of herbicides; resurfacing a road to its original conditions; pruning vegetation and cleaning culverts; and minor soil stabilization activities.

(h) Hazardous Materials/Hazardous Waste Management and Operations:

(1) Use of gauging devices, analytical instruments, and other devices containing sealed radiological sources; industrial radiography; use of radioactive material in medical and veterinary practices; possession of radioactive material incident to performing services such as installation, maintenance, leak tests and calibration; use of uranium as shielding material in containers or devices; and use of radioactive tracers (REC required).

(2) Emergency responses in accordance with emergency response plans (e.g., Spill Prevention Control and Countermeasure Plan (SPCC)/ Installation Spill Contingency Plan, and Chemical Accident and Incident Response Plan) as required by the regulatory agency responsible for release or discharge of oil or hazardous materials/substances; or emergency actions taken by Explosive Ordnance Demolition (EOD) detachment or Technical Escort Unit.

(3) Sampling, surveying, well drilling and installation, analytical testing, site preparation, and intrusive testing to determine if hazardous wastes, contaminants, or pollutants are present.

(4) Routine management to include transportation, distribution, use, storage, treatment, and disposal of solid waste, medical waste, hazardous waste and/or material that complies with EPA, Army, or other regulatory agency requirements. This CX is not applicable to new construction of such facilities.

(5) Routine management of solid waste, hazardous waste, and/or material recycled, reclaimed, reused, or recovered in accordance with EPA or other applicable regulatory agency requirements. This CX is not applicable to major new construction.

(6) Routine research, testing, and operations conducted at established laboratories, to include contractor-operated laboratories. This does not include laboratories constructed for Biosafety Level 3 or Biosafety Level 4.

(7) Conduct and maintenance requirements for silver recovery, alternative sterilization systems, and alternatives for regulated medical waste treatment methodology (REC required).

(8) Disposal of waste and facilities which require a state or Federal permit and specific disposal methods are dictated by the regulating agency (e.g., asbestos, PCBs, and underground storage tanks).

(9) Reutilization, marketing, distribution, donation, and resale of items, equipment, or materiel; normal transfer of items to the Defense Logistics Agency. Items, equipment, or materiel that have been contaminated with hazardous materials will be adequately cleaned and will conform to the applicable regulatory agency's requirements.

(i) Training and Testing

(1) On-post simulated war games and other tactical and logistical exercises involving units of battalion size or smaller.

(2) Training entirely of an administrative or classroom nature.

(3) Intermittent on- and off-post training activities that involve no live fire or vehicles off established roads or trails. Uses include, but are not limited to: Land navigation, physical training, FAA approved aerial overflights, and small unit level training. (REC required for off-post activities).

(4) Testing of materiel, including off-the-shelf materiel, on DA controlled real estate where the tests are conducted in conjunction with the normal execution of the test and evaluation mission (REC required).

(j) Aircraft and Airfield Activities

(1) Infrequent, temporary (less than 30 days) increases in air operations up to 50 percent of the typical installation aircraft operation rate.

(2) Flying activities in compliance with Federal Aviation Regulations, that are dispersed over a wide area and do not frequently (more than once per day) pass near the same ground points.

(3) Installation of remote transmitter or receiver facilities on the installation, or addition of communication channels to existing facilities.

(4) Installation or upgrade of airfield equipment (e.g., runway visual range equipment, visual approach slope indicators).

(5) Participation in airshows.

Subpart E—Environmental Assessments (EAs)

§ 651.22 Conditions and Actions Normally Requiring an EA.

An EA is a document intended to help proponents and other decision makers determine the extent of environmental impacts of a proposed action, alternatives, and whether those impacts are significant. An EA will be prepared if a proposed action:

(a) Is not an emergency;

(b) Is not exempt or an exception;

(c) Does not qualify as a categorical exclusions (CX); and

(d) Does not qualify for environmental impact statement (EIS) criteria or actions.

§ 651.23 EA Format.

Environmental Assessments will include:

(a) Review and approval page.

(b) Purpose and need for the action.

(c) Description of the proposed action.

(d) The alternatives considered, including appropriate consideration of the no-action alternative.

(e) Affected environment.

(f) Environmental consequences of the proposed action and the alternatives. Discussion of impacts should provide sufficient analysis to reach a conclusion of ''significance'', and not be merely a quantification of facts.

(g) Conclusions regarding the significance of impacts, and a recommendation whether to proceed with an EIS.

(h) Listing of agencies and persons consulted.

(i) References.

§ 651.24 Finding of No Significant Impact (FONSI).

(a) An EA results in either a FONSI or a Notice of Intent (NOI) to prepare an EIS. Initiation of a NOI to prepare an EIS should occur at any time in the decision process when it is determined that significant effects may occur as a result of the proposed action.

(b) The FONSI is a formal document that:

(1) Briefly states the decision and the reasons why the decision will not have a significant effect on the human environment.

(2) Summarizes mitigation commitments (costs and resources required to complete a mitigation measure).

(3) Explicitly states that an EIS will not be prepared.

(c) The FONSI will either contain a summary of the EA, or have the EA attached and incorporated by reference.

(d) The FONSI should reference other documents used to make the decision or finding of no significant impact.

§ 651.25 Review and Approval of EAs and FONSIs.

(a) The proponent is responsible for preparing, staffing, processing (e.g., distributing for comment) and approving the EA with the concurrence of the decision maker.

(b) The proponent is responsible for preparing and staffing the FONSI. The decision maker or designee is responsible for approving and signing the FONSI.

§ 651.26 Public Involvement.

(a) Agencies, applicants, local governments, organizations, the general public, and other interested and affected parties will be involved as appropriate in the development of a proposal and preparation of an EA. When considering the type and extent of public notice and involvement, some of the factors to be weighed are:

(1) Magnitude of the proposed project/action.

(2) Extent of anticipated public interest, based on experience with similar proposals.

(3) Urgency of the proposal.

(4) National security classification.

(b) Public involvement should begin early in the proposal development stage, and during preparation of an EA. The direct involvement of agencies with jurisdiction or special expertise is an integral part of impact analysis, and provides information and conclusions for incorporation into EAs. Unclassified documents incorporated into the EA or FONSI by reference are public documents.

(c) Copies of public notices, ''scoping'' letters, EAs and FONSIs, and other documents routinely sent to the public will be sent directly to appropriate Congressional state and district offices.

(d) All EAs will be made available for at least a 30-day public comment period prior to approval of the FONSI, except as provided in paragraph (e) of this section.

(e) The next higher level of authority may waive the 30-day comment period if all of the following conditions are met:

(1) Delay would jeopardize the Army's mission or an applicant's ability to implement a proposal; and

(2) The EA/FONSI have been sufficiently staffed within the Army and with agencies with special expertise or with authority over an aspect of the proposal; and

(3) The action does not involve wetlands, floodplains, or the circumstances and actions described in 40 CFR 1501.4(e)(2). Appropriate public notice of the availability of the completed EA and approved FONSI shall be made.

§ 651.27 Mitigation and Implementation Plan.

(a) Throughout the NEPA process, the proponent will consider mitigating measures to avoid or minimize environmental harm. Mitigation measures or programs will be clearly assessed in the EA and identified in the FONSI for the decision maker to approve. Mitigation committed to as part of the decision will be implemented by the proponent; for purposes of identifying funding requirements, mitigations should be ranked on a priority basis.

(b) An EA may have a no significant impact conclusion because of specific mitigation measures. Such key measures must be accomplished in the stated time frame to support the no significant impact conclusion, or the significance of the project impacts must be reevaluated.

Subpart F—Environmental Impact Statements (EISs)

§ 651.28 Introduction.

An EIS is a public document designed to ensure that NEPA policies and goals are incorporated early into the programs and actions of Federal agencies. An EIS is intended to provide a full, open, and balanced discussion of significant environmental impacts that may result from a proposed action. Along with other project documentation, the EIS provides a basis for informed decision making.

§ 651.29 Conditions Requiring an EIS.

In determining if an EIS is appropriate, the proponent should consider whether the proposed action has the potential to:

(a) Significantly degrade environmental quality or public health or safety.

(b) Significantly adversely affect historic or archaeological resources, public parks and recreation areas, wildlife refuge or wilderness areas, wild and scenic rivers, or aquifers.

(c) Significantly adversely impacts properties listed or meeting the criteria for listing in the National Register of Historic Places, or the National Registry of Natural Landmarks.

(d) Significantly adversely impact prime and unique farmlands located off-post, wetlands, floodplains, coastal zones, or ecologically important areas or other areas of unique or critical environmental sensitivity.

(e) Result in significant or uncertain environmental effects, or unique or unknown environmental risks.

(f) Significantly adversely affect a species or habitat listed or proposed for listing on the Federal list of endangered or threatened species, and Federal candidate species.

(g) Either establish a precedent for future action or represent a decision in principle about a future consideration with significant environmental effects.

(h) Adversely interact with other actions with individually insignificant effects so that cumulatively significant environmental effects result.

(i) Involve the production, storage, transportation, use, treatment and disposal of hazardous or toxic materials to include medical wastes that may have significant environmental impact.

§ 651.30 Actions Normally Requiring an EIS.

(a) The following actions normally require preparation of an EIS:

(1) Land acquisition greater than 640 acres.

(2) Construction of major ranges, such as multipurpose range complexes (MPRCs).

(3) Expansion/Development of a central impact area.

(4) A Category I (major) weapons system acquisition program.

(5) Permanent restationing of a Brigade or larger (TOE) unit during peacetime in the continental United States.

(6) Training activities where approved land use plans or regulatory (e.g.; soil/land/water) plans or goals are exceeded.

(7) Master Plans for established installations where major new developments or substantial changes in mission requirements are proposed.

(8) Division or larger training activities conducted outside the boundaries of an existing military reservation.

(9) Introduction or reintroduction of Federally listed endangered/threatened species, or exotic species.

(10) Construction projects in a National Priorities List (NPL) site or other major cleanup site that are not related to an environmental restoration project.

(11) Proposal similar to past project or action that contributed to or created a major cleanup action.

(12) Construction or location of a facility within a 100-year floodplain where there is potential for significant release of hazardous substances.

(13) Construction or upgrading of a laboratory to a Biosafety Level 4 (32 CFR part 627, App. G).

(14) Proposed action would create or expand an existing Noise Zone III in a noise sensitive area.

(15) Construction of facility to store, treat, or dispose of large quantities of chemical agents (e.g., mustard, sarin, tabun). Does not include riot agents.

(b) While these are individual actions, one must consider the full spectrum of actions that constitute a single proposed action. For example, construction of a multipurpose range must also consider the impacts of operations; land acquisition must consider the intended uses.

§ 651.31 EIS Format.

The EIS must contain:

(a) Cover sheet.

(b) Summary.

(c) Table of contents.

(d) Purpose of and need for the action.

(e) Alternatives considered, including proposed action and no action alternative.

(f) Affected environment (baseline conditions that may be impacted).

(g) Environmental and socioeconomic consequences.

(h) List of preparers.

(i) Distribution list.

(j) Index.

(k) Appendixes (as appropriate).

§ 651.32 Approval Authority.

(a) The primary approval authority for EISs and related documents (NOI, NOA) is the MACOM Commander, Program Executive Officer, Major Subordinate Command Commander with Milestone Decision Authority for acquisition/development programs, or HQDA equivalent for Army-wide programs for which HQDA is the proponent.

(b) Approval authority may be delegated for actions that are limited in scope (e.g., affect only one installation) and are without apparent major controversy. This delegation extends to garrison commanders and Program or Systems Managers).

(c) When delegating authority, consideration should be given to the scope of the proposal, public/agency controversy and sensitivity, and the capacity to adequately and objectively administer the analysis.

§ 651.33 Notice of Intent (NOI).

(a) The NOI initiates the formal scoping process, and is prepared by the proponent.

(b) For proposed actions that are widely controversial, or of national concern or interest, the Office, Chief of Legislative Liaison (OCLL) shall be notified of the pending action so that appropriate congressional coordination may be effected.

(c) The Office, Chief of Public Affairs, will coordinate public announcements through its chain of command.

(d) The approved NOI shall be forwarded to the Army Federal Register Liaison Officer for publication in the Federal Register. Copies of the Notice may also be distributed to agencies, organizations, and individuals who have expressed interest. A copy of the approved NOI shall be forwarded to the Director of Environmental Programs, HQDA.

§ 651.34 Scoping.

This scoping process identifies the significant issues related to a proposed action. Issues which are not significant or which have been covered by prior environmental review are identified and eliminated from detailed study. Proper scoping also identifies reasonable alternatives, essential participants, and information needed for analysis. Affected Federal, state, and local agencies, affected Indian Tribes, and other interested persons are included as part of the scoping process. Proper scoping reduces the chances of overlooking significant issues or reasonable alternatives, and increases public confidence in the decision making process.

§ 651.35 Preparation and Processing of the Draft Environment Impact Statement (DEIS).

(a) The proponent prepares draft environmental impact statements. Following appropriate staffing and revisions, the DEIS is approved for public release by the delegated authority.

(b) Following approval, the proponent will forward five copies of the DEIS to EPA for filing and notice in the Federal Register; publication of EPA's notice of availability of weekly receipts (NWR) commences the public comment period. The proponent will distribute the DEIS prior to, or simultaneous with, filing with EP(A) Distribution will include appropriate Federal, state, regional and local agencies; Native American tribes; and organizations and private citizens who have expressed interest in the proposed action.

(c) For proposed actions that are widely controversial, or of national concern or interest, the Office, Chief of Legislative Liaison (OCLL) shall be notified of the pending action so that appropriate congressional coordination may be effected.

(d) The Office, Chief of Public Affairs, will coordinate public announcements through its chain of command.

(e) The proponent may prepare a separate Notice of Availability (NOA) to be published in the Federal Register by the Army Federal Register Liaison Officer, and in newspapers of general circulation in the affected area(s). Publication should be on the same date as the EPA publication.

§ 651.36 Public Review of the DEIS.

(a) The DEIS public comment period will be no less than 45 days. If the statement is unusually long, a summary of the DEIS may be circulated, with an attached list of locations where the entire DEIS may be reviewed (for example, local public libraries).

(b) Distribution of the complete DEIS must include the following:

(1) Any Federal agency that has jurisdiction by law or special expertise with respect to any environmental impact involved and any appropriate Federal, state, or local agency

authorized to develop and enforce environmental standards.

(2) The applicant, if any.

(3) Any person, organization, or agency requesting the entire draft environmental impact statement.

(c) News releases or public notices should be prepared and issued to publicize any meetings or hearings that may be scheduled.

§ 651.37 Preparation of the Final Environmental Impact Statement (FEIS).

(a) Response to comments. The proponent shall consider and respond appropriately to public comments. Responses to comments on the DEIS will be incorporated by modification of the text and/or written explanation. Similar comments should be grouped for a common response.

(b) If the changes to the DEIS are exclusively clarifications or minor factual corrections, a document consisting of only the DEIS comments, responses to the comments, and errata sheets may be prepared and circulated. If such an abbreviated FEIS is anticipated, the DEIS should contain a statement advising reviewers to keep the document so they will have a complete set of ''final'' documents. The final EIS to be filed with EPA will consist of a complete document containing a new cover sheet, the errata sheets, comments and responses, and the text of the draft EIS. Coordination, approval, filing, and public notice of an abbreviated FEIS is the same as for a draft EIS.

(c) If extensive modifications are warranted, the proponent will prepare a new, complete FEIS. Preparation, coordination, approval, filing, and public notice of the FEIS is the same as the process outlined for the DEIS.

(d) The FEIS distribution must include any person, organization, or agency that submitted substantive comments on the DEIS. One copy of the FEIS will be forwarded to the U.S. Army Environmental Center.

(e) The FEIS will clearly identify the Army's preferred alternative unless prohibited by law.

§ 651.38 Decision.

(a) No final decision on a proposed action will be made until at least 30 days after EPA has published the NWR of the FEIS in the Federal Register, or at least 90 days after the NWR of the DEIS, whichever is later.

(b) The proponent will prepare a Record of Decision (ROD) for the decision maker(s) signature, which will—

(1) Clearly state the decision. Describe the decision in sufficient detail to address the significant issues and ensure long-term monitoring and execution.

(2) Identify all alternatives considered by the Army in reaching its decision, specifying the environmentally preferred alternative(s). The Army will discuss preferences among alternatives based on relevant factors including environmental, economic, and technical considerations and agency statutory missions.

(3) Identify and discuss all such factors, including any essential considerations of national policy that were balanced by the Army in making its decision. Because economic and technical analyses are balanced with environmental analysis, the agency preferred alternative will not necessarily be the environmentally preferred alternative.

(4) State how those considerations entered into the final decision.

(5) State whether all practicable means to avoid or minimize environmental harm from the selected alternative have been adopted, and if not, why they were not. A monitoring and enforcement program will be adopted and summarized for any mitigation.

(c) Implementation of the decision may begin immediately after approval of the ROD.

(d) For RODs involving actions of national interest or concern, the proponent will prepare a Notice of Availability (NOA) to be published in the Federal Register by the Army Federal Register Liaison Officer. Processing and approval of the NOA is the same as for an NOI.

(e) RODs will be distributed to agencies with authority or oversight over aspects of the proposal, cooperating agencies, appropriate Congressional state and district offices, all parties that are directly affected, and others upon request.

(f) One copy of the ROD will be forwarded to the U.S. Army Environmental Center.

(g) Implementing the Decision. The Army will ensure that its decision is properly execute(d) Mitigation and other conditions assessed in EISs and accepted as part of the decision will be implemented by the proponent. The proponent will—

(1) Include appropriate conditions in grants, permits, or other approvals.

(2) Ensure mitigation measures are properly resourced and implemented.

(3) Upon request, inform cooperating or commenting agencies on the progress in carrying out adopted mitigation measures that they have proposed and that were adopted by the agency making the decision.

(4) Upon request, make the results of relevant monitoring available to the public and Congress.

§ 651.39 Supplemental EISs (SEISs).

(a) An SEIS is an addition to a draft and/or final EIS that has been filed; a supplement should not be considered a major revision to an EIS. If the changes to a proposed action, circumstances, or analysis are significant, a revised (new) EIS shall be prepared rather than a supplemental EIS. A process of publishing ''supplements'' can become confusing to reviewers, and should be done only when an analysis can be substantially improved without confusion.

(b) SEISs are prepared, approved, filed, and given notice in the same way as draft and final EISs.

(c) A Notice of Intent need not be published or amended, nor new scoping undertaken, for a supplemental draft EIS that is expected to be filed within one year from the date the original EIS being supplemented (draft or final) was filed with EPA, *and* the affected publics are not expected to change drastically (i.e., supplement does not involve actions that may impact heretofore unaffected publics).

§ 651.40 The Army as a Cooperating Agency.

(a) The Army may be a Cooperating Agency:

(1) To provide information or technical expertise to a Lead Agency.

(2) To approve portions of a proposed action.

(3) To ensure the Army has an opportunity to be involved in an action of another Federal agency which will affect the Army.

(b) Review and Approval of EISs and RODs

(1) Adequacy of an EIS is the responsibility primarily of the Lead Agency. However, as a Cooperating Agency with approval authority over portions of a proposal, the Army may adopt an EIS after a review concludes the EIS adequately satisfies the Army's comments and suggestions.

(2) If the Army is a major approval authority for the proposed action, the appropriate Army official may sign the Record of Decision prepared by the Lead Agency, or prepare a separate, more focused ROD. If the Army's approval authority is only a minor aspect of the overall proposal, such as issuing a temporary use permit, the Army need not sign the Lead Agency's ROD nor prepare a separate ROD.

(3) The magnitude of the Army's involvement in the proposal will determine the appropriate level and

scope of Army review of NEPA documents. If the Army is a major approval authority or may be severely impacted by the proposal or an alternative, the Army should undertake the same level of review as if it were the Lead Agency; if the involvement is limited, the review may be substantially less. The Lead Agency is responsible for overall supervision of the EIS, and the Army will attempt to meet all reasonable timeframes imposed by the Lead Agency.

Gregory D. Showalter,

Army Federal Register Liaison Officer.

[FR Doc. 96–17991 Filed 7–19–96; 8:45 am]

BILLING CODE 3710–08–P

ENVIRONMENTAL PROTECTION AGENCY

40 CFR Parts 52 and 81

[LA–34–1–7300b, FRL–5531–5]

Approval and Promulgation of Implementation Plans and Designation of Areas for Air Quality Planning Purposes; State of Louisiana; Correction of Classification; Approval of the Maintenance Plan; Redesignation of Pointe Coupee Parish to Attainment for Ozone

AGENCY: Environmental Protection Agency (EPA).

ACTION: Proposed rulemaking.

SUMMARY: The EPA is today approving a request from the State of Louisiana to remove Pointe Coupee Parish, Louisiana from the Baton Rouge serious ozone nonattainment area and reclassify Pointe Coupee Parish from serious to marginal. In addition, the EPA is proposing approval of a request from the State of Louisiana to redesignate Pointe Coupee to attainment for ozone. On December 20, 1995, the State of Louisiana submitted a maintenance plan and request to redesignate the Pointe Coupee Parish ozone nonattainment area to attainment. Under the Clean Air Act as amended in 1990 (the Act), nonattainment areas may be redesignated to attainment if sufficient data are available to warrant the redesignation and the area meets the other Act redesignation requirements. In this action, the EPA is proposing approval of Louisiana's redesignation request and maintenance plan because it meets the maintenance plan and redesignation requirements set forth in the Act, and the EPA is proposing approval of the 1993 base year emissions inventory. The approved maintenance plan will become a federally enforceable part of the State Implementation Plan for Louisiana. Please see the direct final notice of this action located elsewhere in today's Federal Register for a detailed description of the redesignation request and maintenance plan.

DATES: Comments on this proposed rule must be postmarked by August 21, 1996.

ADDRESSES: Comments should be mailed to Thomas H. Diggs, Chief, Air Planning Section (6PD–L), EPA Region 6, 1445 Ross Avenue, Dallas, Texas 75202–2733. Copies of the State's petition and other information relevant to this action are available for inspection during normal hours at the following locations:

Environmental Protection Agency, Region 6, Air Planning Section (6PD–L), 1445 Ross Avenue, Suite 700, Dallas, Texas 75202–2733.

Louisiana Department of Environmental Quality, Office of Air Quality, 7290 Bluebonnet Boulevard, Baton Rouge, Louisiana 70810.

Anyone wishing to review this petition at the Region 6 EPA office is asked to contact the person below to schedule an appointment 24 hours in advance.

FOR FURTHER INFORMATION CONTACT: Lt. Mick Cote, Air Planning Section (6PD–L), EPA Region 6, telephone (214) 665–7219.

SUPPLEMENTARY INFORMATION: See the information provided in the Direct Final rule which is located in the Rules Section of this Federal Register.

Authority: 42 U.S.C. 7401–7671q.

Dated: June 27, 1996.

Carol M. Browner,

Administrator.

[FR Doc. 96–18195 Filed 7–19–96; 8:45 am]

BILLING CODE 6560–50–M

40 CFR PART 300

[FRL–5539–8]

National Oil and Hazardous Substances Pollution Contingency Plan; National Priorities List

AGENCY: Environmental Protection Agency.

ACTION: Notice of Intent to Delete the St. Augusta Landfill/Engen Dump from the National Priorities List; request for comments.

SUMMARY: The United States Environmental Protection Agency (U.S. EPA) Region V announces its intent to delete the St. Augusta Landfill/Engen Dump Site from the National Priorities List (NPL) and requests public comment on this action. The NPL constitutes Appendix B of 40 CFR part 300 which is the National Oil and Hazardous Substances Pollution Contingency Plan (NCP), which U.S. EPA promulgated pursuant to section 105 of the Comprehensive Environmental Response, Compensation, and Liability Act of 1980 (CERCLA) as amended. This action is being taken by U.S. EPA, because it has been determined that all Fund-financed responses under CERCLA have been implemented and U.S. EPA, in consultation with the State of Minnesota, has determined that no further response is appropriate. Moreover, U.S. EPA and the State have determined that remedial activities conducted at the Site to date have been protective of public health, welfare, and the environment.

DATES: Comments concerning the proposed deletion of the Site from the NPL may be submitted on or before August 21, 1996.

ADDRESSES: Comments may be mailed to Gladys Beard, Associate Remedial Project Manager, Superfund Division, U.S. EPA, Region V, 77 W. Jackson Blvd. (SR–6J), Chicago, IL 60604. Comprehensive information on the site is available at U.S. EPA's Region V office and at the local information repository located at: Minnesota Pollution Control Agency, 520 Lafayette RD., St. Paul, MN 55155–4194. Requests for comprehensive copies of documents should be directed formally to the Region V Docket Office. The address and phone number for the Regional Docket Officer is Jan Pfundheller (H–7J), U.S. EPA, Region V, 77 W. Jackson Blvd., Chicago, IL 60604, (312) 353–5821.

FOR FURTHER INFORMATION CONTACT: Gladys Beard (SR–6J), Associate Remedial Project Manager, Superfund Division, U.S. EPA, Region V, 77 W. Jackson Blvd., Chicago, IL 60604, (312) 886–7253 or Susan Pastor (P–19J), Office of Public Affairs, U.S. EPA, Region V, 77 W. Jackson Blvd., Chicago, IL 60604, (312) 353–1325.

SUPPLEMENTARY INFORMATION:

Table of Contents

I. Introduction
II. NPL Deletion Criteria
III. Deletion Procedures
IV. Basis for Intended Site Deletion

I. Introduction

The U.S. Environmental Protection Agency (EPA) Region V announces its intent to delete the St. Augusta/Engen Dump Site from the National Priorities List (NPL), which constitutes Appendix B of the National Oil and Hazardous

Substances Pollution Contingency Plan (NCP), and requests comments on the proposed deletion. The EPA identifies sites that appear to present a significant risk to public health, welfare or the environment, and maintains the NPL as the list of those sites. Sites on the NPL may be the subject of remedial actions financed by the Hazardous Substance Superfund Response Trust Fund (Fund). Pursuant to section 300.425(e)(3) of the NCP, any site deleted from the NPL remains eligible for Fund-financed remedial actions if the conditions at the site warrant such action.

The U.S. EPA will accept comments on this proposal for thirty (30) days after publication of this notice in the Federal Register.

Section II of this notice explains the criteria for deleting sites from the NPL. Section III discusses procedures that EPA is using for this action. Section IV discusses the history of this site and explains how the site meets the deletion criteria.

Deletion of sites from the NPL does not itself create, alter, or revoke any individual's rights or obligations. Furthermore, deletion from the NPL does not in any way alter U.S. EPA's right to take enforcement actions, as appropriate. The NPL is designed primarily for informational purposes and to assist in Agency management.

II. NPL Deletion Criteria

The NCP establishes the criteria that the Agency uses to delete Sites from the NPL. In accordance with 40 CFR 300.425(e), sites may be deleted from the NPL where no further response is appropriate. In making this determination, U.S. EPA will consider, in consultation with the State, whether any of the following criteria have been met:

(i) Responsible parties or other persons have implemented all appropriate response actions required; or

(ii) All appropriate Fund-financed responses under CERCLA have been implemented, and no further response action by responsible parties is appropriate; or

(iii) The Remedial investigation has shown that the release poses no significant threat to public health or the environment and, therefore, remedial measures are not appropriate.

III. Deletion Procedures

Upon determination that at least one of the criteria described in 300.425(e) has been met, U.S. EPA may formally begin deletion procedures once the State has concurred. This Federal Register notice, and a concurrent notice in the local newspaper in the vicinity of the Site, announce the initiation of a 30-day comment period. The public is asked to comment on U.S. EPA's intention to delete the Site from the NPL. All critical documents needed to evaluate U.S. EPA's decision are included in the information repository and the deletion docket.

Upon completion of the public comment period, if necessary, the U.S. EPA Regional Office will prepare a Responsiveness Summary to evaluate and address comments that were received. The public is welcome to contact the U.S. EPA Region V Office to obtain a copy of this responsiveness summary, if one is prepared. If U.S. EPA then determines the deletion from the NPL is appropriate, final notice of deletion will be published in the Federal Register.

IV. Basis for Intended Site Deletion

The St. August Landfill/Engen Dump is located in the northeast quarter of Section 12, T123N, R28W, and the northwest quarter 7, T123N, R27W of St. Augusta Township, Stearns County, Minnesota. The site is bounded by the Mississippi River on the northeast, Johnson Creek on the southeast, Interstate Highway 94 on the west, and privately owned land to the south and the north.

The Engen Dump consists of two areas approximately 11 acres and 8 acres in size. The St. Augusta Landfill is approximately 16 acres in size. A borrow pit that was used to provide cover material for the St. Augusta Landfill is located on the northern side of the landfill.

Landfilling operations were conducted at the dump and landfill between 1966 and 1982. The site was the primary waste disposal site for the St. Cloud area during this time. The Engen Dump began to receive municipal, commercial, and industrial wastes in 1966. The industrial wastes disposed of at the dump consisted of ground glass, solids and sledges, paper pulp waste, ash, and small amounts of cutting oils, coolants, solvents, paints, and cleaning compounds. The dump was phased out of operation between 1971 and 1972 and portions of the dump were covered with on-site soils.

In June of 1985, the site was given a score of 34 under the Superfund program hazard ranking system score. The site was proposed for the Federal National Priorities (NPL) on September 8, 1985. The listing was finalized in July 22, 1987, 52 FR 140.

A September 1992 Groundwater Operable Unit Remedial Investigation/Feasibility Study (RI/FS) was prepared to fulfill the requirements of the Request for Response Action (RFRA) issued by the Minnesota Pollution Control Agency (MPCA) in 1993. The recommended remedial action under the RFRA for addressing site contamination was no further action. A no further response action was chosen for the Site because a Closure Plan was prepared and executed for the landfill as part of the Solid Waste Disposal Facility Permit (SW–35) issued by MPCA. No final Record of Decision (ROD) was issued on the Site.

In 1994, the Legislature of the State of Minnesota enacted the Landfill Cleanup Law, Minn. Laws 1994, ch. 639, codified at Minn. Stat. § § 115B.39 to 115B.46 (the Act), authorizing the Commissioner of the Minnesota Pollution Control Agency (MPCA) to assume responsibility for future environmental response actions at qualified landfills that have received notices of compliance from the Commissioner of MPCA. Additionally, the Act established funds to enable the MPCA to perform all necessary response, operation and maintenance at such landfills. At sites where no responsible parties are conducting response actions under CERCLA, MPCA is responsible for issuing a notice of compliance, after it determines that all work that could be expected under a state order or under state closure requirements, has been completed.

A notice of compliance was issued by MPCA for the St. August Landfill/Engen Dump Site on May 8, 1995. MPCA has since assumed all responsibility for the St. August Landfill/Engen Dump under the Act. Therefore, no further response actions under CERCLA are appropriate at this time. Consequently, U.S. EPA proposes to delete the site from the NPL.

EPA, with concurrence from the State of Minnesota, has determined that all appropriate Fund-financed responses under CERCLA at the St. August Landfill/Engen Dump Superfund Site have been completed , and no further CERCLA response is appropriate in order to provide protection of human health and environment. Therefore, EPA proposes to delete the site from the NPL.

Dated: June 17, 1996.

David A. Ullrich,

Acting Regional Administrator, U.S. EPA, Region V.

[FR Doc. 96–18041 Filed 7–19–96; 8:45 am]

BILLING CODE 6560–50–P

40 CFR Part 300

[FRL–5538–8]

National Oil and Hazardous Substances Pollution Contingency Plan; National Priorities List

AGENCY: Environmental Protection Agency.

ACTION: Notice of intent to delete McChord Air Force Base Washrack Treatment Area from the National Priorities List Update: Request for comments.

SUMMARY: The Environmental Protection Agency (EPA), Region 10, announces its intent to delete the McChord Air Force Base Washrack Treatment Area (Washrack Treatment Area) Site from the National Priorities List (NPL) and requests public comment on this proposed action. The NPL constitutes Appendix B of 40 CFR part 300 which is the National Oil and Hazardous Substances Pollution Contingency Plan (NCP), which EPA promulgated pursuant to Section 105 of the Comprehensive Environmental Response, Compensation, and Liability Act (CERCLA) of 1980, as amended. EPA and the State of Washington Department of Ecology (Ecology) have determined that all appropriate remedial response to the extent practicable has been taken and that the Site poses no significant threat to public health or the environment. Therefore, further remedial measures pursuant to CERCLA are not appropriate.

DATES: Comments concerning this Site may be submitted on or before August 21, 1996.

ADDRESSES: Comments may be mailed to: Kathleen Stryker, Environmental Protection Agency, 1200 Sixth Avenue, Mail Stop: ECL–115, Seattle, Washington 98101.

Comprehensive information on this Site is available through the Region 10 public docket which is available for viewing at the McChord Air Force Base Washrack Treatment Area information repositories at the following locations:

Pierce County Library, Lakewood Branch, 6300 Wildaire Road SW Lakewood, WA 98499.

United States Environmental Protection Agency, Region 10 Office of Environmental Cleanup—Records Center, Attn: Dawn Musgrove, 1200 Sixth Avenue, Mail Stop, ECL–076, Seattle, Washington 98101.

FOR FURTHER INFORMATION CONTACT: Kathleen Stryker, U.S. EPA Region 10, 1200 Sixth Avenue, Mail Stop: ECL–115, Seattle, Washington 98101, (206) 553–1171.

SUPPLEMENTARY INFORMATION:

Table of Contents

I. Introduction
II. NPL Deletion Criteria
III. Deletion Procedures
IV. Basis of Intended Site Deletion

I. Introduction

The Environmental Protection Agency (EPA) Region 10 announces its intent to delete a site from the National Priorities List (NPL), Appendix B of the National Oil and Hazardous Substances Contingency Plan (NCP), 40 CFR part 300, and requests comments on this deletion. EPA identifies sites on the NPL that appear to present a significant risk to human health or the environment. As described in § 300.425(e)(3) of the NCP, sites deleted from the NPL remain eligible for remedial actions in the unlikely event that conditions at the site warrant such actions.

EPA plans to delete the McChord Air Force Base Washrack Treatment Area Site (''Site'') in Tacoma, Washington, from the NPL.

EPA will accept comments on the plan to delete this Site until August 21, 1996.

Section II of this document explains the criteria for deleting sites from the NPL. Section III discusses procedures that EPA is using for this action. Section IV discusses the Washrack Treatment Area Site and explains how the Site meets the deletion criteria.

II. NPL Deletion Criteria

Section 300.425(e) of the NCP provides that ''releases'' (sites) may be deleted from, or recategorized on the NPL where no further response is appropriate. In making a determination to delete a site from the NPL, EPA shall consider, in consultation with the state, whether any of the following criteria have been met:

(i) Responsible parties or other parties have implemented all appropriate response actions required;

(ii) All appropriate responses under CERCLA have been implemented, and no further action by responsible parties is appropriate, or

(iii) The remedial investigation has shown that the release poses no significant threat to public health or the environment and, therefore, taking of remedial measures is not appropriate.

Even if a site is deleted from the NPL, where hazardous substances, pollutants or contaminants remain at the site *above* levels that allow for unlimited use and unrestricted exposure, EPA's policy is that a subsequent review of the site will be conducted at least every five years after the initiation of the remedial action at the site to ensure that the site remains protective of public health and the environment. In the case of the Washrack Treatment Area Site, hazardous substances above health-based levels do not remain on the site, therefore, periodic five-year reviews are not required. In addition, whenever there is a significant release from a site deleted from the NPL, the site may be restored to the NPL without the application of the Hazard Ranking System.

III. Deletion Procedures

The following procedures were used for the intended deletion of this Site: (1) The Air Force completed all appropriate response actions required for the site. EPA Region 10 issued a memo to document that no further active remedial response is necessary at the site thus qualifying the Site for inclusion on the Superfund Site Construction Completion List, and a final close out report that documents the achievement of cleanup goals; (2) Ecology concurred with the proposed deletion decision; (3) A notice has been published in the local newspaper and has been distributed to appropriate federal, state, and local officials and other interested parties announcing the commencement of a 30-day public comment period on EPA's Notice of Intent to Delete; and, (4) All relevant documents have been made available for public review in the local Site information repositories.

Deletion of the Site from the NPL does not itself, create, alter or revoke any individual rights or obligations. The NPL is designed primarily for informational purposes to assist Agency management. As mentioned in Section II of this Notice, 40 CFR 300.425(e)(3) states that deletion of a site from the NPL does not preclude eligibility for future response actions.

EPA's Regional Office will accept and evaluate public comments on EPA's Notice of Intent to Delete before making a final decision. The Agency will prepare a Responsiveness Summary if any significant public comments are received.

A deletion occurs when the Regional Administrator places a final action in the Federal Register. Generally, the NPL will reflect deletions in the final update following the final action. Public notices and copies of the Responsiveness Summary will be made available to local residents by the Regional office.

IV. Basis for Intended Site Deletion

The following site summary provides the Agency's rationale for the intention to delete this Site from the NPL.

Site Location and History

McChord Air Force Base (AFB) is an active 4,616-acre military installation located seven miles south of downtown Tacoma. The Washrack Treatment Area (WTA), a 22-acre area where airplanes were washed and drained of fuel, is located within the northern industrial and operational portion of the base along the western portion of the instrument runway. The site includes the former washrack (now inactive), two leach pits (now backfilled), an oil/water separator (skimmer), storm drainage infiltration ditches (now backfilled) and a layer of floating fuel on shallow groundwater in the vicinity.

The two Department of Defense (DOD) Installation Restoration Program (IRP) sites that comprise the WTA (SD–54, the leach pits; and DP–60, infiltration ditches) were originally identified during the 1982 Phase I record search (CH2MHIll. 1982) conducted by McChord. The phase two IRP investigation (SAIC, 1985) measured low level organic contamination at Site DP–60 and the adjacent IRP Site SD–54.

As a result of the IRP record search and investigation, further studies were recommended to confirm contaminant characteristics and distribution. The EPA designated Site SD–54 as the Washrack Treatment Area in 1984 and nominated it for inclusion on the NPL. The site was listed in 1987. In 1989 the Air Force entered into a three party Federal Facilities Agreement (FFA) with Region X of the EPA and Ecology for conducting an investigation and cleanup of contaminants posing an unacceptable risk to human health and the environment.

A remedial investigation, which was completed in 1992, investigated source areas for the floating fuel and evaluated the nature and extent of contamination in all potentially affected media. Based on evaluation of the RI and the baseline risk assessment, the EPA determined and documented in the Record of Decision (ROD) for the WTA that no remedial action under CERCLA was necessary for soil, surface water or sediment to ensure protection of human health and the environment. The ROD selected passive removal of the floating fuel to address the unacceptable risk posed by benzene associated with the floating fuel layer, and monitoring to evaluate the need for remediation of the residual fuel in the soil.

A remedial design pilot study for recovery of the floating fuel or Non-Aqueous Phase Liquids (NAPL) was performed in 1993 and 1994 to determine if the layer of floating fuel could be removed. The NAPL Pilot Test Study (EA Engineering, 1994) concluded that passive removal of the fuel was not feasible due to the small amount of fuel present and that original estimates of fuel available for recovery were overestimates. The study also concluded that the soil was not a significant continuing source of contamination to groundwater and that there is an active population of bacteria present in the soil capable of naturally degrading the petroleum.

In light of the findings of the Pilot Study an Explanation of Significant Differences (ESD) was prepared. The ESD described the results of the pilot study and the changes that were made to the ROD as a result. The ESD changed the final remedy to a combination of natural attenuation and long-term monitoring of the groundwater. Natural attenuation consists in part of allowing the hydrocarbons in the shallow groundwater to be consumed by the naturally occurring bacteria present at the site and to allow the lighter portions of the hydrocarbons to volatilize. The shallow groundwater below the floating fuel would be monitored, as well as the shallow groundwater up- and down gradient of the floating fuel.

The installation of one test trench and ten test pit observation wells as part of the pilot test for the passive removal of the floating fuel constituted the only active remedial action that occurred at the site. EPA concurred in a March 1995 addendum to the ROD that no further active remedial response under CERCLA is necessary at the WTA. This addendum served to signify construction completion.

Eleven rounds of groundwater samples have been collected at the floating fuel area since September 1990. All of the groundwater samples were analyzed for the six compounds for which Remedial Action Objectives (RAOs) were established in the ROD. With the exception of total petroleum hydrocarbons (TPH), levels of these compounds detected in the seven rounds conducted since completion of the ROD have been consistently below the RAOs. Semi-annual monitoring reports conducted since the ROD for the WTA are available in the site repository.

Public Participation

Community input has been sought by McChord Air Force Base throughout the cleanup process for the Site. Community relations activities have included public meetings prior to the signing of the ROD, several public notices in local newspapers, and routine publication of progress fact sheets. A copy of the Deletion Docket can be reviewed by the public at the Pierce County Library, Lakewood Branch or the EPA Region 10 Superfund Records Center. The Deletion Docket includes this Notice, the ROD, ESD, Remedial Action Construction Report, Memo documenting that no further remedial action is necessary, and Final Site Close-Out Report. EPA Region 10 will also announce the availability of the Deletion Docket for public review in a local newspaper and informational fact sheet.

One of the three criteria for deletion specifies that EPA may delete a site from the NPL if ''responsible parties or other persons have implemented all appropriate response actions required''. EPA, with the concurrence of Ecology, believes that this criterion for deletion has been met. Ground water data from the Site confirm that the ROD cleanup goals have been achieved. It is concluded that there is no significant threat to human health or the environment and, therefore, no further remedial action is necessary. Subsequently, EPA is proposing deletion of this Site from the NPL. Documents supporting this action are available from the docket.

Dated: July 8, 1996.

C. Findley,

Acting Regional Administrator, Region 10.

[FR Doc. 96–18180 Filed 7–19–96; 8:45 am]

BILLING CODE 6560–50–P

DEPARTMENT OF DEFENSE

48 CFR Parts 219 and 252

[DFARS Case 96–D003]

Defense Federal Acquisition Regulation Supplement; Certificate of Competency

AGENCY: Department of Defense (DoD).

ACTION: Proposed rule with request for comments.

SUMMARY: The Director of Defense Procurement is proposing to amend the Defense Federal Acquisition Regulation Supplement (DFARS) to implement revisions made to the Small Business Administration's regulations covering the Procurement Assistance Programs (Part 125, Chapter I, Title 13 of the Code of Federal Regulations).

DATES: Comments on the proposed rule should be submitted in writing to the address shown below on or before September 20, 1996, to be considered in the formulation of the final rule.

ADDRESSES: Interested parties should submit written comments to: Defense Acquisition Regulations Council, Attn: Ms. Susan L. Schneider,

PDUSD(A&T)DP(DAR), IMD 3D139, 3062 Defense Pentagon, Washington, DC 20301–3062. Telefax number (703) 602–0350. Please cite DFARS Case 96–D003 in all correspondence related to this issue.

FOR FURTHER INFORMATION CONTACT: Susan Schneider, (703) 602–0131.

SUPPLEMENTARY INFORMATION:

A. Background

This proposed rule amends DFARS Parts 219 and 252 to implement changes made to the Small Business Administration's (SBA) regulations (Part 125, Chapter I, Title 13 of the Code of Federal Regulations). The proposed rule (1) updates the names of the SBA offices involved in processing Certificates of Competency in order to conform with final revisions to SBA regulations; (2) removes language referencing set-aside preferences for a small disadvantaged business manufacturer or regular dealer owned by an Indian tribe, including an Alaska Native Corporation, because the underlying statutes (Section 8051 of the 1994 Defense Authorization Act and Section 8012 of the 1995 Defense Authorization Act) are no longer in effect; (3) replaces the term ''regular dealer'' with ''nonmanufacturer'' to conform with final revisions to Department of Labor regulations; and (4) provides a DFARS definition for the term ''nonmanufacturer.''

B. Regulatory Flexibility Act

The proposed rule is not expected to have a significant economic impact on a substantial number of small entities within the meaning of the Regulatory Flexibility Act, 5 U.S.C. 601, *et seq.*, because the rule does not impose any new requirements on contractors, large or small. The proposed rule merely implements the SBA rule to clarify its applicability within the Department of Defense and makes administrative changes consistent with the changes in 13 CFR Part 125. An initial regulatory flexibility analysis has therefore not been performed. Comments are invited from small businesses and other interested parties. Comments from small entities concerning the affected DFARS subparts will also be considered in accordance with Section 610 of the Act. Such comments must be submitted separately and cite DFARS Case 96–D003 in correspondence.

C. Paperwork Reduction Act

The proposed rule does not impose any new reporting or recordkeeping requirements which require Office of Management and Budget approval under 44 U.S.C. 3501, *et seq.*

List of Subjects in 48 CFR Parts 219 and 252

Government procurement.

Michele P. Peterson,

Executive Editor, Defense Acquisition Regulations Council.

Therefore, it is proposed that 48 CFR Parts 219 and 252 be amended as follows:

1. The authority citation for 48 CFR Parts 219 and 252 continues to read as follows:

Authority: 41 U.S.C. 421 and 48 CFR Chapter 1.

PART 219—SMALL BUSINESS PROGRAMS

2. Section 219.602–3 is amended by revising paragraph (c)(i)(A) to read as follows:

219.602–3 Resolving differences between the agency and the Small Business Administration.

(c)(i) * * *

(A) A request for appeal, summarizing the issues. The request must be sent to arrive within five working days after receipt of the SBA Headquarters written position.

* * * * *

PART 252—SOLICITATION PROVISIONS AND CONTRACT CLAUSES

3. Section 252.219–7006 is amended by adding in paragraph (a), in alphabetical order, a definition of ''Nonmanufacturer''; and by revising the introductory text of paragraph (d)(1), paragraph (d)(2), and Alternate I to read as follows:

252.219–7006 Notice of evaluation preference for small disadvantaged business concerns.

* * * * *

(a) * * *

''Nonmanufacturer,'' as used in this clause, means a small disadvantaged business concern which, although not involved in the manufacture of the supplies required by the solicitation, is engaged in continuing sales of such supplies to the public.

* * * * *

(d) * * *

(1) A small disadvantaged business concern, historically black college or university, or minority institution offeror agrees that in performance of the contract, in the case of a contract for—

* * * * *

(2) A small disadvantaged business, historically black college or university, or minority institution nonmanufacturer submitting an offer in its own name agrees to furnish in performing this contract only end items manufactured or produced by small disadvantaged business concerns, historically black colleges or universities, or minority institutions in the United States.

* * * * *

ALTERNATE I (DATE)

As prescribed in 219.7003, substitute the following paragraph (d)(2) for paragraph (d)(2) of the basic clause:

(d)(2) A small disadvantaged business, historically black college or university, or minority institution nonmanufacturer submitting an offer in its own name agrees to furnish in performing this contract only end items manufactured or produced by small business concerns, historically black colleges or universities, or minority institutions in the United States.

[FR Doc. 96–18432 Filed 7–19–96; 8:45 am]

BILLING CODE 5000–04–M

Notices

Federal Register
Vol. 61, No. 141
Monday, July 22, 1996

This section of the FEDERAL REGISTER contains documents other than rules or proposed rules that are applicable to the public. Notices of hearings and investigations, committee meetings, agency decisions and rulings, delegations of authority, filing of petitions and applications and agency statements of organization and functions are examples of documents appearing in this section.

DEPARTMENT OF AGRICULTURE

Forest Service

Kensington Gold Mine Project, AK, Tongass National Forest-Chatham Area, Juneau Ranger District; Intent To Prepare a Supplemental Environmental Impact Statement

Pursuant to section 102(2)(C) of the National Environmental Policy Act of 1969, the USDA Forest Service, Chatham Area, under the direction of the Juneau Ranger District, will be preparing a supplemental environmental impact statement to analyze and display the effects of proposed changes to the Kensington Gold Project, located on public and private lands in southeastern Alaska. The proposed mine is operated by Coeur Alaska and is located approximately 45 miles north of downtown Juneau. The Record of Decision for the original Final Environmental Impact Statement was signed on January 29, 1992.

The proposed operations are subject to approval of a Plan of Operations under 36 CFR, Part 228, which is intended to ensure that adverse environmental effects on National Forest System lands and resources are minimized. The proposed changes to the project's Plan of Operations include the following:

1. Construction of a dry tailings (dewatered) storage facility
2. Relocation of the permanent camp facilities
3. Off-site processing of the flotation concentrate
4. Selective underground backfilling of tailings in the mine
5. Location of the concentrate storage area at Comet Beach
6. Use of diesel fuel for power generation rather than LPG (liquified petroleum gas)
7. Redesign and alignment of the haul road
8. Relocation of diesel storage tank, laydown area, and explosive storage
9. Separate treatment of mine drainage
10. Mine waste rock storage facility
11. New facilities for mine operations
12. Construction of additional settling ponds

The purpose and need for the proposed amendments to the Plan of Operations analyzed in the 1992 EIS, is to reduce potential impacts from a mixing zone in saltwater; increase the assurance of meeting water quality standards; minimize potential impacts to Ophir/Ivanhoe and Sherman Creeks; reduce operational and maintenance requirements; minimize reclamation and long term closure liabilities; and increase the economic efficiency of the mine.

In addition to the Forest Service, the Environmental Protection Agency and U.S. Army Corps of Engineers have jurisdiction and will participate as cooperating agencies in the preparation of the SEIS. The Forest Service has agreed to be the lead agency. EPA will be responsible for assuring that the analysis provides sufficient information for issuance of a National Pollutant Discharge Elimination System permit under authority of the Clean Water Act. The Corps will be responsible for ensuring that the analysis provides sufficient information for issuance of a Section 404 of the Clean Water Act permit, Section 10 of the Rivers and Harbors Act of 1899 permit, and for compliance with Executive Orders 11990 and 11900 for wetlands and floodplains. Memorandums of Understanding have been completed with both of the cooperating agencies.

The decision to be made is whether or not to approve the Plan of Operations as amended or require the operator to revise its proposal. The original FEIS analyzed the effects of developing the Kensington Gold Project. The SEIS will analyze only the effects of the proposed changes to the Plan of Operations.

The SEIS will be prepared by a third party contractor, SAIC, for the cooperating agencies under the direction of the Forest Service.

Key resources to be analyzed include stability of the dry tailings storage area; impacts to wetlands; impacts to fisheries from the discharge; visual and water quality effects and stability of disturbed areas such as the dry tailings storage area, laydown area, new fuel tank sites, and avalanche control areas; air quality effects from diesel power generation; spill potential and effects of hauling and handling additional diesel fuel.

Gary A. Morrison, Forest Supervisor, Tongass National Forest, Chatham Area, is the responsible official.

The Forest Service is seeking information and comments from Federal, State, and local agencies as well as individuals and organizations who may be interested in, or affected by the proposed action. Public scoping meetings are planned for Juneau at Centennial Hall from 2:00 p.m. until 7:00 p.m. on Wednesday, August 7 and in Haines at the Council Chambers in City Hall from 2:00 p.m. until 7:00 p.m. on Thursday, August 8.

Comments will be accepted throughout the EIS process but, to be most useful during the analysis they should be received in writing by August 15, 1996.

The draft supplemental environmental impact statement should be available for public review by October 1, 1996. The comment period on the draft supplemental environmental impact statement will be 45 days from the date the Environmental Protection Agency publishes the notice of availability in the Federal Register. The final supplemental environmental impact statement is scheduled to be completed by December 15, 1996.

The Forest Service believes, at this early stage, it is important to give reviewers notice of several court rulings related to public participation in the environmental review process. First, reviewers of draft environmental impact statements must structure their participation in the environmental review of the proposal so that it is meaningful and alerts an agency to the reviewer's position and contentions. *Vermont Yankee Nuclear Power Corp.* v. *NRDC, 435 U.S. 519, 553 (1978).* Also, environmental objections that could be raised at the draft environmental impact statement stage but that are not raised until after the completion of the final environmental impact statement may be waived or dismissed by the courts. *City of Angoon* v. *Hodel,* 803 F.2d 1016, 1022 (9th Cir. 1986) and *Wisconsin Heritages, Inc.* v. *Harris,* 490 F. Supp. 1334, 1338 (E.D. Wis. 1980). Because of these court rulings, it is very important

that those interested in this proposed action participate by the close of the 45 day comment period so that substantive comments and objections are made available to the Forest Service at a time when it can meaningfully consider them and respond to them in the final environmental impact statement. To assist the Forest Service in identifying and considering issues and concerns on the proposed action, comments on the draft environmental impact statement should be as specific as possible. It is also helpful if comments refer to specific pages or chapters of the draft statement. Comments may also address the adequacy of the draft environmental impact statement or the merits of the alternatives formulated and discussed in the statement. Reviewers may wish to refer to the Council on Environmental Quality Regulations for implementing the procedural provisions of the National Environmental Policy Act at 40 CFR 1503.3 in addressing these points.

Written comments and suggestions concerning the analysis should be sent to Roger Birk, Minerals Management Specialist, Juneau Ranger District, 8465 Old Dairy Road, Juneau, Alaska, 99801. The telephone number is 907–586–8800 and the fax is 586–8808.

Dated: July 10, 1996.

Gary A. Morrison,

Forest Supervisor.

[FR Doc. 96–18460 Filed 7–19–96; 8:45 am]

BILLING CODE 3410–11–M

Grain Inspection, Packers and Stockyards Administration

Livestock Care and Handling Guidelines; Extension of Comment Period

SUMMARY: On May 17, 1996, a notice requesting public comments regarding the Agency's proposed livestock care and handling guidelines was published in the Federal Register (61 FR 24916). Comments are being sought concerning the proposed guidelines for the care and handling of livestock at stockyards to assist the industry in complying with the provisions of the Packers and Stockyards Act.

The notice published in the Federal Register on May 17, 1996, requires comments to be filed with the Administration on or before July 16, 1996. Pursuant to requests from interested parties for additional time to prepare their comments, the time for filing is being extended 30 days.

DATES: The time for filing comments is hereby extended to and includes August 15, 1996.

ADDRESSES: Comments may be mailed to the Deputy Administrator, Packers and Stockyards Programs, Room 3039, South Building, U.S. Department of Agriculture, Washington, DC 20250–2800. Comments received may be inspected during normal business hours in the Office of the Deputy Administrator, Packers and Stockyards Programs.

FOR FURTHER INFORMATION CONTACT: Dan Van Ackeren, Director, Livestock Marketing Division, (202) 720–6951.

Done at Washington, DC this 15th day of July 1996.

James R. Baker,

Administrator, Grain Inspection, Packers and Stockyards Administration.

[FR Doc. 96–18405 Filed 7–19–96; 8:45 am]

BILLING CODE 3410–EN–M

Rural Utilities Service

Distance Learning and Telemedicine Grant Program—Notice of Application Filing Deadline for Fiscal Year 1996 Funding; Correction

AGENCY: Rural Utilities Service, USDA.

ACTION: Correction.

In the notice on page 33639 in the issue of Thursday, June 27, 1996, make the following correction:

On page 33639 in the third column, change the telephone number for Gerald Nugent, Jr., Director, Northeast Area to (202) 720–2281.

Robert Peters,

Acting Administrator.

[FR Doc. 96–18403 Filed 7–19–96; 8:45 am]

BILLING CODE 3410–15–M

ARMED FORCES RETIREMENT HOME

Privacy Act of 1974; Computer Matching Program Between the Armed Forces Retirement Home and the Social Security Administration

AGENCY: Armed Forces Retirement Home (AFRH).

ACTION: Notice.

SUMMARY: Pursuant to section 552a (e)(12) of the Privacy Act of 1974, as amended, and the Office of Personnel Management and Budget (OMB) Guidelines on Matching Programs, notice is hereby made of the computer matching between the Armed Forces Retirement Home (AFRH) and the Social Security Administration (SSA). The purpose of this match is for SSA to provide and verify benefit payment information on the AFRH's residents.

DATES: This proposed action will become effective August 21, 1996. The computer matching will proceed accordingly without further notice, unless comments are received which would result in a contrary determination or if Congress or the Office of Management and Budget, objects thereto. Any public comment must be received before the effective data.

ADDRESSES: Any interested party may submit written comments to the U.S. Soldiers' and Airmen's Home, Resource Management Directorate, 3700 North Capitol Street NW., Washington, DC 20317–0002.

FOR FURTHER INFORMATION CONTACT: Donna H. Dietz, at (202) 722–3163.

SUPPLEMENTARY INFORMATION: AFRH and SSA have concluded an agreement to conduct a computer matching program. The purpose of this agreement is to establish the conditions under which the SSA agrees to the disclosure of benefit payment information on the residents of the AFRH, which includes the United States Soldiers' and Airmen's Home (USSAH) and United States Naval Home (USNH). The AFRH Resident Fee Maintenance System will be used in a matching program with the SSA Master Beneficiary Records and Supplemental Security Income Records. Residents of the AFRH are required by 24 U.S.C. 414 to pay a percentage of their Federal payments, including Social Security; thus, the AFRH will use the SSA data to verify the benefit earnings information currently provided by the residents, and identify any unreported recipients of benefit payments. A computer matching is the most efficient and effective manner to accomplish this task with the least amount of intrusion of personal privacy of the individuals concerned. It was therefore concluded, and agreed upon, that computer matching would be the best and least obtrusive manner of accomplishing this requirement.

The matching agreement and an advance copy of this notice were submitted on July 12, 1996, to the Committee on Government Reform and Oversight of the United States House of Representatives, the Committee on Governmental Affairs of the United States House of Representatives, the Committee on Governmental Affairs of the United States Senate, and the Administrator of the Office of Information and Regulatory Affairs, Office of Management and Budget. The matching program is subject to review by Congress and OMB and shall not

become effective until that review period has elapsed.

Dennis W. Jahnigen,

Chair, Armed Forces Retirement Home.

Computer Matching Program Between the Armed Forces Retirement Home and the Social Security Administration

A. *Participating Agencies:* AFRH and SSA.

B. *Purpose of the matching program:* The purpose of this computer matching program is to identify and verify the Social Security benefit earnings of each resident of the AFRH. This is necessary to properly assess correct resident fee amounts, which is required by 24 USC 414 to be a fixed percentage of residents' Federal payments, including Social Security payments.

C. *Authority for conducting the matching program;* The Armed Forces Retirement Home Act of 1991, 24 USC 401–441, requires the Directors of the USSAH and USNH, which are incorporated under the Armed Forces Retirement Home, to collect from each resident a monthly resident fee. The fee is a fixed percentage of residents' Federal payments, including Social Security payments.

D. *Records to be matched:* The SSA records involved in the match are the Supplemental Security Income Record, HHS/SSA/OSR, 09–60–0103, and the Master Beneficiary Record, HHS/SSA/OSR, 09–60–0090. The AFRH will provide a magnetic finder file established from the AFRH Resident Fee Maintenance System (last published at 58 FR 68629).

E. *Inclusive dates of the matching program:* This computer matching program is subject to review by Congress and the Office of Management and Budget. If no objections are raised by either within 40 days, and the 30 day public notice period for comment has expired for this Federal Register notice with no significant adverse public comments, this computer matching program becomes effective and the respective agencies may begin the exchange of data at a mutually agreeable time and will be repeated on a semiannual basis. Under no circumstances shall the matching program be implemented before the 30 day public notice period for comment has elapsed as this time period cannot be waived. By agreement between SSA and AFRH, the matching program will be in effect and continue for 18 months, with an option to renew for 12 additional months, unless one of the parties to the agreement advises the other by written request to terminate or modify the agreement.

F. *Address for receipt of public comments or inquiries;* U.S. Soldiers' and Airmen's Home, Administration Division, Resource Management Directorate, 3700 North Capitol Street NW., Washington, DC 20317–0002, (202) 722–3163.

[FR Doc. 96–18481 Filed 7–19–96; 8:45 am]

BILLING CODE 8250–01–M

ASSASSINATION RECORDS REVIEW BOARD

Sunshine Act Meeting

DATES: August 5–6, 1996.

PLACE: ARRB, 600 E Street, NW., Washington, DC.

STATUS: Open (Room 206) and Closed.

MATTERS TO BE CONSIDERED:

August 5, 9:00 a.m.—Closed Meeting
1. Review and Accept Minutes of Closed Meeting
2. Review of Assassination Records
3. Other Business

August 6, 9:00 a.m.—Continuation of Closed Meeting

August 6, 1:00 p.m.—Open Meeting
1. Review and Accept Minutes of the June 4, 1996 Open Meeting
2. Discussion of ARRB review of CIA ''Segregated Collection.'' The public is invited to comment

CONTACT PERSON FOR MORE INFORMATION: Thomas Samoluk, Associate Director for Communications, 600 E Street, NW., Second Floor, Washington, DC 20530. Telephone: (202) 724–0088; Fax: (202) 724–0457.

David G. Marwell,

Executive Director.

[FR Doc. 96–18583 Filed 7–17–96; 5:01 pm]

BILLING CODE 6118–01–P

DEPARTMENT OF COMMERCE

International Trade Administration

North American Free-Trade Agreement (NAFTA), Article 1904 Binational Panel Reviews

AGENCY: NAFTA Secretariat, United States Section, International Trade Administration, Department of Commerce.

ACTION: Notice of completion of panel review.

SUMMARY: The Binational Panel has completed its review of the Final Determination Not to Revoke Antidumping Duty Orders and Findings Not To Terminate Suspended Investigations made by the International Trade Administration respecting Color Picture Tubes from Canada, Secretariat File No. USA–95–1904–03.

FOR FURTHER INFORMATION CONTACT: James R. Holbein, United States Secretary, NAFTA Secretariat, Suite 2061, 14th and Constitution Avenue, Washington, DC 20230, (202) 482–5438.

SUPPLEMENTARY INFORMATION: On May 6, 1996 the Binational Panel issued its decision affirming the Final Determination Not to Revoke Antidumping Duty Orders and Findings Not To Terminate Suspended Investigations made by the International Trade Administration respecting Color Picture Tubes from Canada. The Secretariat was instructed to issue a Notice of Final Panel Action on May 17, 1996. No Request for an Extraordinary Challenge was filed within 30 days of the issuance of the Notice of Final Panel Action. Therefore, on the basis of the Panel decision and Rule 80 of the Article 1904 Panel Rules, the Panel Review was completed and the panelists were discharged from their duties effective June 17, 1996.

Dated: July 12, 1996.

James R. Holbein,

United States Secretary, NAFTA Secretariat.

[FR Doc. 96–18449 Filed 7–19–96; 8:45 am]

BILLING CODE 3510–GT–M

National Oceanic and Atmospheric Administration

[I.D. 070996B]

Marine Mammals; Scientific Research Permit (P167H)

AGENCY: National Marine Fisheries Service (NMFS), National Oceanic and Atmospheric Administration (NOAA), Commerce.

ACTION: Receipt of application.

SUMMARY: Notice is hereby given that Hubbs-Sea World Research Institute, 2595 Ingraham Street, San Diego, CA 92109, has applied in due form for a permit to take several species of pinnipeds and small cetaceans for purposes of scientific research.

DATES: Written comments must be received on or before August 21, 1996.

ADDRESSES: The application and related documents are available for review upon written request or by appointment in the following office(s):

Permits Division, Office of Protected Resources, NMFS, 1315 East-West Highway, Room 13130, Silver Spring, MD 20910 (301/713–2289); and

Director, Southwest Region, NMFS, 501 West Ocean Boulevard, Suite 4200,

Long Beach, CA 90802–4213 (310/980–4001).

Written data or views, or requests for a public hearing on this request, should be submitted to the Director, Office of Protected Resources, NMFS, 1315 East-West Highway, Room 13130, Silver Spring, MD 20910. Those individuals requesting a hearing should set forth the specific reasons why a hearing on this particular request would be appropriate.

FOR FURTHER INFORMATION CONTACT: Jeannie Drevenak, Permits Division, 301/713–2289.

Concurrent with the publication of this notice in the Federal Register, NMFS is forwarding copies of this application to the Marine Mammal Commission and its Committee of Scientific Advisors.

SUPPLEMENTARY INFORMATION: The subject permit is requested under the authority of the Marine Mammal Protection Act of 1972, as amended (16 U.S.C. 1361 *et seq.*), and the Regulations Governing the Taking and Importing of Marine Mammals (50 CFR part 216).

The applicant seeks authorization to harass (*i.e.*, expose to fishing gear and auditory stimulus) rehabilitated common dolphins (*Delphinus delphis*) (up to 3 animals); stranded rehabilitated and permanently held California sea lions (*Zalophus californianus*) (up to 48 animals), harbor seals (*Phoca vitulina*) (up to 10 animals), and elephant seals (*Mirounga angustirostris*) (up to 14 animals); and permanently held bottlenose dolphins (*Tursiops truncatus*) (up to 42 animals), Pacific white-sided dolphins (*Lagenorhynchus obliquidens*) (up to 8 animals), and Commersons dolphins (*Cephalorhynchus commersonii*) (up to 7 animals) during experiments to measure the interaction of small cetaceans and pinnipeds with fishing gear and to determine the effect of introducing a pinger on responses. Up to 20 pinnipeds and 10 cetaceans may be subject to superficial contusions, abrasions or cuts. The proposed experiments will take place at Sea World parks in California, Texas, Ohio, and Florida, over a 2 1/2 year period.

Dated: July 15, 1996.

Ann D. Terbush,

Chief, Permits and Documentation Division, Office of Protected Resources, National Marine Fisheries Service.

[FR Doc. 96–18529 Filed 7–19–96; 8:45 am]

BILLING CODE 3510–22–F

COMMODITY FUTURES TRADING COMMISSION

Coffee, Sugar & Cocoa Exchange, Inc.: Applications for Designation in Futures and Futures Options on Butter

AGENCY: Commodity Futures Trading Commission.

ACTION: Notice of availability of the terms and conditions of proposed commodity futures and option contracts.

SUMMARY: The Coffee, Sugar & Cocoa Exchange, Inc. (CSCE or Exchange) has applied for designation as a contract market in butter futures contracts and options on that futures contract. The Director of the Division of Economic Analysis (Division) of the Commission, acting pursuant to the authority delegated by Commission Regulation 140.96, has determined that publication of the proposals for comment is in the public interest, will assist the Commission in considering the views of interested persons, and is consistent with the purposes of the Commodity Exchange Act.

DATES: Comments must be received on or before August 21, 1996.

ADDRESSES: Interested persons should submit their views and comments to Jean A. Webb, Secretary, Commodity Futures Trading Commission, Three Lafayette Centre, 1155 21st St. NW., Washington, DC 20581. Reference should be made to the CSCE butter futures and option contracts.

FOR FURTHER INFORMATION CONTACT: Please contact Fred Linse of the Division of Economic Analysis, Commodity Futures Trading Commission, Three Lafayette Centre, 1155 21st St., NW., Washington, DC 20581, telephone 202–418–5273.

SUPPLEMENTARY INFORMATION: Copies of the terms and conditions will be available for inspection at the Office of the Secretariat, Commodity Futures Trading Commission, Three Lafayette Centre, 1155 21st St., NW., Washington, DC 20581. Copies of the terms and conditions can be obtained through the Office of the Secretariat by mail at the above address or by phone at (202) 418–5097.

Other materials submitted by the CSCE may be available upon request pursuant to the Freedom of Information Act (5 U.S.C. 552) and the Commission's regulations thereunder (17 CFR Part 145 (1987)), except to the extent they are entitled to confidential treatment as set forth in 17 CFR 145.5 and 145.9. Requests for copies of such materials should be made to the FOI, Privacy and Sunshine Act Compliance Staff of the Office of the Secretariat at the Commission's headquarters in accordance with 17 CFR 145.7 and 145.8.

Any person interested in submitting written data, views, or arguments on the proposed terms and conditions, or with respect to other materials submitted by the CSCE, should send such comments to Jean A. Webb, Secretary, Commodity Futures Trading Commission, Three Lafayette Centre, 1155 21st St., NW., 20581 by the specified date.

Issued in Washington, DC, on July 16, 1996.

Blake Imel,

Acting Director.

[FR Doc. 96–18474 Filed 7–19–96; 8:45 am]

BILLING CODE 6351–01–P

DEPARTMENT OF DEFENSE

Department of the Air Force

Proposed Collection; Comment Request

AGENCY: Armstrong Laboratory, Noise Effects Branch (AL/OEBN), Department of the Air Force, Department of Defense.

ACTION: Notice.

In compliance with the requirement of Section 3506(c)(2)(A) of the Paperwork Reduction Act of 1995, the Department of the Air Force announces a proposed public information collection and seeks public comment on the provisions thereof. Comments are invited on: (a) whether the proposed data collection of information is necessary for the proposed performance of the agency, including whether the information shall have general utility; (b) the accuracy of the agency's estimate of burden of the proposed data collection; (c) ways to enhance the utility and clarity of the information to be collected; and (d) ways to minimize the burden of the collection of the information on respondents through the use of new forms of information technology.

DATES: Consideration will be given to all comments received by September 20, 1996.

ADDRESSES: Written comments and recommendations on the proposed information collection should be sent to Bartholomew Elias, Ph.D., Armstrong Laboratory, Noise Effects Branch (AL/OEBN), 2610 Seventh Street, Wright-Patterson AFB, OH 45433–7901.

FOR FURTHER INFORMATION CONTACT: To request more information on this proposed information collection or to

obtain a copy of the proposal and associated collection instruments, please write to the above address, or call Bartholomew Elias at (513) 255–3664.

Title Associated Form, and OMB Number: DoD/USAF Military Aircraft Overflight Study.

Needs and Uses: The information collection is necessary to obtain acoustical noise data and visitor survey data, to estimate a dose-response relationship between sound from military aircraft overflights and effects (reactions) on visitors to National Park Service (NPS) areas. This study builds upon research conducted by the National Park Service to examine the dose-response relationship between sightseeing aircraft overflights and NPS visitor reactions. Because of the different characteristics of sounds from military aircraft, the dose-response relationship for these types of aircraft overflights may be quite different from the relationship developed for sightseeing aircraft overflights.

Affected Public: Public visitors to National Park Service areas.

Annual Burden Hours: 250.

Number of Respondents: 1500.

Responses Per Respondent: 1.

Average Burden Per Respondent: 10 minutes.

Frequency: One time.

SUPPLEMENTARY INFORMATION:

Summary of Information Collection

On-site interviews will be administered with visitors at selected sites within NPS areas. Concurrent with the on-site interviews, sound recordings of the exposure to aircraft overflights (and other noise sources) will be taken to determine the ''noise dose'' experienced by each visitor. The noise doses will be matched to the responses obtained in the visitor survey. A minimum of 300 visitors and a maximum of 500 visitors will be surveyed at each of three potential sites over a period of 4–5 days at each site. A maximum total of 1500 park visitors will be surveyed. The interview will take approximately 5–10 minutes to administer and will be conducted with all eligible adult members of sampled groups.

Patsy J. Conner,

Air Force Federal Register Liaison Office.

[FR Doc. 96–18450 Filed 7–19–96; 8:45 am]

BILLING CODE 3910–01–M

DEPARTMENT OF ENERGY

Office of Energy Efficiency and Renewable Energy

Advisory Committee on the Demonstration and Commercial Application of Renewable Energy and Energy Efficiency Technologies

AGENCY: Office of Energy and Renewable Energy, Department of Energy.

ACTION: Notice of open meeting.

SUMMARY: Under the provisions of the Federal Advisory Committee Act (Public Law 92–463; 86 Stat. 770), notice is hereby given of the following meeting: Advisory Committee on the Demonstration and Commercial Application of Renewable Energy and Energy Efficiency Technologies.

Date and Time: August 13, 1996, 8:30 a.m.–5:00 p.m.

Place: George Washington University Club, 800 21st Street, NW., 3rd Floor—Elliot Room, Washington, DC.

FOR FURTHER INFORMATION CONTACT: Thomas W. Sacco, Office of Energy Outreach (EE–14), Energy Efficiency and Renewable Energy, U.S. Department of Energy, Washington, DC 20585, Telephone 202/586–0759.

SUPPLEMENTARY INFORMATION:

Purpose of Committee: To advise the Secretary of Energy on the development of the solicitation and evaluation criteria for commercialization ventures, and on otherwise carrying out her responsibilities under the Renewable Energy and Energy Efficiency Technology Competitiveness Act of 1989 (Public Law 101–218, 42 U.S.C. 12005), as amended by the Energy Policy Act of 1992 (Public Law 102–486, 42 U.S.C. 13201).

Tentative Agenda: Briefings and discussions of:

- Review of DOE solicitation of applications for financial assistance for renewable energy projects;
- Discussion of 1997 Management Plan;
- Other matters requiring Committee consideration;
- Public Comment Period (10 minute rule).

Public Participation: The meeting is open to the public. Written statements may be filed with the Committee either before or after the meeting. Members of the public who wish to make oral statements pertaining to agenda items should contact Thomas W. Sacco at the address or telephone number listed above. Requests to make oral presentations must be received 2 days prior to the meeting; reasonable provision will be made to include the statement in the agenda. The Chair of the Committee is empowered to conduct the meeting in a fashion that will facilitate the orderly conduct of business.

Minutes: The minutes of the meeting will be available for public review and copying within 30 days at the Freedom of Information Public Reading Room 1E–190, Forrestal Building, 1000 Independence Avenue, SW., Washington, DC, between 9 a.m. and 4 p.m., Monday through Friday, except Federal holidays.

Issued at Washington, DC, on July 17, 1996.

Rachel M. Samuel,

Acting Deputy Advisory, Committee Management Officer.

[FR Doc. 96–18478 Filed 7–19–96; 8:45 am]

BILLING CODE 6450–01–P

Federal Energy Regulatory Commission

[Docket No. CP96–632–000]

Williams Natural Gas Company; Notice of Request Under Blanket Authorization

July 16, 1996.

Take notice that on July 10, 1996, Williams Natural Gas Company (WNG), P.O. Box 3288, Tulsa, Oklahoma 74101, filed in Docket No. CP96–632–000, a request pursuant to Sections 157.205 and 157.216(b) of the Commission's Regulations under the Natural Gas Act (18 CFR 157.205 and 157.216) for authorization to abandon facilities located in Leavenworth County, Kansas, under WNG's blanket certificate issued in Docket No. CP82–479–000 and Section 7(c) of the Natural Gas Act, all as more fully set forth in the request which is on file with the Commission and open to public inspection.

WNG proposes to abandon by reclaim measuring, regulating, and appurtenant facilities originally installed for the direct sale of natural gas to the Department of the Army Federal prison barracks (the Army) located in Leavenworth County, Kansas. WNG asserts that by letter dated February 6, 1996, the Army has agreed to the proposed abandonment. WNG states that the estimated total cost to reclaim these facilities is $3,633 with a salvage value of $0.

Any person or the Commission Staff may, within 45 days of the issuance if the instant notice by the Commission, file pursuant to Rule 214 of the Commission's Rules of Practice and

Procedure (18 CFR 385.214), a motion to intervene and pursuant to Section 157.205 of the regulations under the Natural Gas Act (18 CFR 157.205), a protest to the request. If no protest is filed within the time allowed therefor, the proposed activities shall be deemed to be authorized effective the day after the time allowed for filing a protest. If a protest is filed and not withdrawn 30 days after the time allowed for filing a protest, the instant request shall be treated as an application for authorization pursuant to Section 7 of the Natural Gas Act.

Lois D. Cashell,

Secretary.

[FR Doc. 96–18451 Filed 7–19–96; 8:45 am]

BILLING CODE 6717–01–M

[Docket No. ER96–2323–000, et al.]

Potomac Electric Power Company, et al.; Electric Rate and Corporate Regulation Filings

July 12, 1996.

Take notice that the following filings have been made with the Commission:

1. Potomac Electric Power Company

[Docket No. ER96–2323–000]

Take notice that on July 5, 1996, Potomac Electric Power Company (Pepco), tendered for filing service agreements pursuant to Pepco FERC Electric Tariff, Original Volume No. 1, entered into between Pepco and: Carolina Power and Light Company, PanEnergy Power Services Inc., Morgan Stanley Capital Group, TransCanada Power Corp., Coral Power L.L.C., and Southern Energy Marketing Company Inc. An effective date of June 14, 1996 for these service agreements, with waiver of notice, is requested.

Comment date: July 26, 1996, in accordance with Standard Paragraph E at the end of this notice.

2. Northeast Utilities Service Company

[Docket No. ER96–2324–000]

Take notice that on July 5, 1996, Northeast Utilities Service Company (NUSCO), tendered for filing, a Service Agreement to provide Non-Firm Point-to-Point Transmission Service to The Connecticut Light and Power Company (CL&P) under the NU System Companies Transmission Service Tariff No. 8.

NUSCO states that a copy of this filing has been mailed to CL&P.

NUSCO requests that the Service Agreement become effective June 11, 1996.

Comment date: July 26, 1996, in accordance with Standard Paragraph E at the end of this notice.

3. Northeast Utilities Service Company

[Docket No. ER96–2325–000]

Take notice that on July 5, 1996, Northeast Utilities Service Company (NUSCO), tendered for filing a Service Agreement to provide Short-Term Firm Point-to-Point Transmission Service to Cinergy Services, Inc. (Cinergy) under the NU System Companies' Transmission Service Tariff No. 8.

NUSCO states that a copy of this filing has been mailed to Cinergy.

NUSCO requests that the Service Agreement become effective July 8, 1996.

Comment date: July 26, 1996, in accordance with Standard Paragraph E at the end of this notice.

4. Northeast Utilities Service Company

[Docket No. ER96–2326–000]

Take notice that on July 5, 1996, Northeast Utilities Service Company (NUSCO), tendered for filing, a Service Agreement to provide Non-Firm Point-to-Point Transmission Service to Cinergy Services, Inc. (Cinergy) under the NU System Companies' Transmission Service Tariff No. 8.

NUSCO states that a copy of this filing has been mailed to Cinergy.

NUSCO requests that the Service Agreement become effective July 8, 1996.

Comment date: July 26, 1996, in accordance with Standard Paragraph E at the end of this notice.

5. PECO Energy Company

[Docket No. ER96–2327–000]

Take notice that on July 5, 1996, PECO Energy Company (PECO) filed a Service Agreement dated July 1, 1996, with New York State Electric & Gas Corporation (NYSE&G) under PECO's FERC Electric Tariff, First Revised Volume No. 4 (Tariff). The Service Agreements adds NYSE&G as a customer under the Tariff.

PECO requests an effective date of July 1, 1996, for the Service Agreement.

PECO states that copies of this filing have been supplied to NYSE&G and to the Pennsylvania Public Utility Commission.

Comment date: July 26, 1996, in accordance with Standard Paragraph E at the end of this notice.

6. PECO Energy Company

[Docket No. ER96–2328–000]

Take notice that on July 5, 1996, PECO Energy Company (PECO), filed a Service Agreement dated July 1, 1996, with Georgia Power Company (Georgia Power) under PECO's FERC Electric Tariff, First Revised Volume No. 4 (Tariff). The Service Agreement adds Georgia Power as a customer under the Tariff.

PECO requests an effective date of July 1, 1996, for the Service Agreement.

PECO states that copies of this filing have been supplied to Georgia Power and to the Pennsylvania Public Utility Commission.

Comment date: July 26, 1996, in accordance with Standard Paragraph E at the end of this notice.

7. Southern Company Services, Inc.

[Docket No. ER96–2329–000]

Take notice that on July 5, 1996, Southern Company Services, Inc. (SCS), acting on behalf of Alabama Power Company, Georgia Power Company, Gulf Power Company, Mississippi Power Company, and Savannah Electric and Power Company (collectively referred to as Southern Companies) filed two (2) service agreements between SCS, as agent of the Southern Companies, and i) Aquila Power Corporation and ii) South Carolina Public Service Authority for non-firm transmission service under the Point-to-Point Transmission Service Tariff of Southern Companies.

Comment date: July 26, 1996, in accordance with Standard Paragraph E at the end of this notice.

8. Idaho Power Company

[Docket No. ER96–2330–000]

Take notice that on July 5, 1996, Idaho Power Company (IPC), tendered for filing with the Federal Energy Regulatory Commission a Service Agreement under Idaho Power Company FERC Electric Tariff, Second Revised, Volume No. 1 between Duke/Louis Dreyfus L.L.C. and Idaho Power Company, and a Certificate of Concurrence.

Comment date: July 26, 1996, in accordance with Standard Paragraph E at the end of this notice.

9. Wisconsin Electric Power Company

[Docket No. ER96–2331–000]

Take notice that on July 8, 1996, Wisconsin Electric Power Company (Wisconsin Electric), tendered for filing an electric service agreement between itself and Edison Sault Electric Company. The agreement establishes Edison Sault as a customer under Wisconsin Electric's Coordination Sales Tariff, FERC Electric Tariff, Original Volume No. 2.

Wisconsin Electric requests an effective date sixty days after filing.

Wisconsin Electric is authorized to state that Edison Sault joins in the requested effective date.

Copies of the filing have been served on Edison Sault and the Michigan Public Service Commission.

Comment date: July 26, 1996, in accordance with Standard Paragraph E at the end of this notice.

10. Northeast Utilities Service Company

[Docket No. ER96–2332–000]

Take notice that on July 8, 1996, Northeast Utilities Service Company (NUSCO), tendered for filing, a Service Agreement with Littleton Electric Light Department (Littleton) under the NU System Companies System Power Sales/ Exchange Tariff No. 6.

NUSCO states that a copy of this filing has been mailed to Littleton.

NUSCO requests that the Service Agreement become effective June 1, 1996.

Comment date: July 26, 1996, in accordance with Standard Paragraph E at the end of this notice.

11. Cinergy Services, Inc.

[Docket No. ER96–2333–000]

Take notice that on July 8, 1996, Cinergy Services, Inc. (Cinergy), tendered for filing a service agreement under Cinergy's Non-Firm Power Sales Standard Tariff (the Tariff) entered into between Cinergy and Consumers Power Company and The Detroit Edison Company.

Cinergy and Consumers Power Company and The Detroit Edison Company are requesting an effective date of June 16, 1996.

Comment date: July 26, 1996, in accordance with Standard Paragraph E at the end of this notice.

12. Cinergy Services, Inc.

[Docket No. ER96–2334–000]

Take notice that on July 8, 1996, Cinergy Services, Inc. (Cinergy), tendered for filing on behalf of its operating company, PSI Energy, Inc. (PSI), a Second Supplemental Agreement, dated April 1, 1996, to the Interconnection Agreement, dated June 1, 1994 between Duke/Louis Dreyfus L.L.C., (D/LD) and Cinergy.

The Second Supplemental Agreement incorporates a name change and the following Exhibit has also been revised:

A Power Sales by D/LD

Cinergy and D/LD have requested an effective date of July 1, 1996.

Copies of the filing were served on Duke/Louis Dreyfus L.L.C., the Connecticut Dept. of Public Utility Control, the Kentucky Public Service Commission, Public Utilities Commission of Ohio and the Indiana Utility Regulatory Commission.

Comment date: July 26, 1996, in accordance with Standard Paragraph E at the end of this notice.

13. Cinergy Services, Inc.

[Docket No. ER96–2335–000]

Take notice that on July 5, 1996, Cinergy Services, Inc. (Cinergy), tendered for filing on behalf of its operating companies, The Cincinnati Gas & Electric Company (CG&E) and PSI Energy, Inc. (PSI), an Interchange Agreement, dated May 15, 1996 between Cinergy, CG&E, PSI and TransCanada Power Corp. (TransCanada).

The Interchange Agreement provides for the following service between Cinergy and TransCanada:

1. Exhibit A—Power Sales by TransCanada
2. Exhibit B—Power Sales by Cinergy

Cinergy and TransCanada have requested an effective date of July 15, 1996.

Copies of the filing were served on TransCanada Power Corp., the Alberta Public Utilities Board, the Kentucky Public Service Commission, the Public Utilities Commission of Ohio and the Indiana Utility Regulatory Commission.

Comment date: July 26, 1996, in accordance with Standard Paragraph E at the end of this notice.

14. Black Hills Corporation

[Docket No. ER96–2337–000]

Take notice that on July 3, 1996, Black Hills Corporation, which operates its electric utility business under the assumed name of Black Hills Power and Light Company (Black Hills), tendered for filing an executed form service agreement with LG&E Power Marketing, Inc.

Copies of the filing were provided to the regulatory commission of each of the states of Montana, South Dakota, and Wyoming.

Comment date: July 26, 1996, in accordance with Standard Paragraph E at the end of this notice.

Standard Paragraph

E. Any person desiring to be heard or to protest said filing should file a motion to intervene or protest with the Federal Energy Regulatory Commission, 888 First Street, N.E., Washington, D.C. 20426, in accordance with Rules 211 and 214 of the Commission's Rules of Practice and Procedure (18 CFR 385.211 and 18 CFR 385.214). All such motions or protests should be filed on or before the comment date. Protests will be considered by the Commission in determining the appropriate action to be taken, but will not serve to make protestants parties to the proceeding. Any person wishing to become a party must file a motion to intervene. Copies of this filing are on file with the Commission and are available for public inspection.

Lois D. Cashell,

Secretary.

[FR Doc. 96–18525 Filed 7–19–96; 8:45 am]

BILLING CODE 6717–01–P

[Docket No. ER96–1551–002, et al.]

Public Service Company of New Mexico, et al.; Electric Rate and Corporate Regulation Filings

July 15, 1996.

Take notice that the following filings have been made with the Commission:

1. Public Service Company New Mexico

[Docket No. ER96–1551–002]

Take notice that on July 10, 1996, Public Service Company of New Mexico submitted its fling in compliance with the Commission's June 10, 1996, order in the captioned proceeding.

Comment date: July 29, 1996, in accordance with Standard Paragraph E at the end of this notice.

2. KCS Power Marketing, Inc., Kaztex Energy Ventures, Inc., Tennessee Power Company, J.L. Walker & Associates, DuPont Power Marketing, Inc., Westar Electric Marketing, Inc., Vanpower, Inc.

[Docket No. ER95–208–006, Docket No. ER95–295–007, Docket No. ER95–581–005, Docket No. ER95–1261–004, Docket No. ER95–1441–004, Docket No. ER96–458–004, Docket No. ER96–552–002, (not consolidated)]

Take notice that the following informational filings have been made with the Commission and are on file and available for inspection and copying in the Commission's Public Reference Room:

On July 8, 1996, KCS Power Marketing, Inc. filed certain information as required by the Commission's March 2, 1995, order in Docket No. ER95–208–000.

On July 8, 1996, Kaztex Energy Ventures, Inc. filed certain information as required by the Commission's February 24, 1995, order in Docket No. ER95–295–000.

On July 10, 1996, Tennessee Power Company filed certain information as required by the Commission's April 28, 1995, order in Docket No. ER95–581–000.

On July 8, 1996, J.L. Walker & Associates filed certain information as

required by the Commission's August 7, 1995, order in Docket No. ER95–1261–000.

On June 17, 1996, DuPont Power Marketing Inc. filed certain information as required by the Commission's August 30, 1995, order in Docket No. ER95–1441–000.

On July 8, 1996, Westar Electric Marketing, Inc. filed certain information as required by the Commission's January 31, 1996, order in Docket No. ER96–458–000.

On July 8, 1996, Vanpower, Inc. filed certain information as required by the Commission's January 19, 1996, order in Docket No. ER96–552–000.

3. Engineered Energy Systems Corporation

[Docket No. ER96–1731–000]

Take notice that on June 26, 1996, Engineered Energy Systems Corporation tendered for filing an amendment in the above-referenced docket.

Comment date: July 29, 1996, in accordance with Standard Paragraph E at the end of this notice.

4. New England Power Company

[Docket No. ER96–2009–000]

Take notice that on June 21, 1996, New England Power Company tendered for filing supplemental information to its June 3, 1996, filing in the above-referenced docket.

Comment date: July 29, 1996, in accordance with Standard Paragraph E at the end of this notice.

5. New England Power Company

[Docket No. ER96–2040–000]

Take notice that on June 21, 1996, New England Power Company tendered for filing supplemental information to its June 3, 1996, filing in the above-referenced docket.

Comment date: July 29, 1996, in accordance with Standard Paragraph E at the end of this notice.

6. Monterey Consulting Associates, Inc.

[Docket No. ER96–2143–000]

Take notice that on July 1, 1996, Monterey Consulting Associates, Inc. tendered for filing supplemental information to its June 13, 1996, filing in the above-referenced docket.

Comment date: July 29, 1996, in accordance with Standard Paragraph E at the end of this notice.

7. Duke Power Company

[Docket No. ER96–2196–000]

Take notice that on June 20, 1996, Duke Power Company (Duke) filed a supplement to its Electric Power Contract with Kings Mountain, North Carolina. This contract is on file with the Commission and has been designated Duke Power Company Rate Schedule FERC No. 10. The supplement provides for a termination of service at Delivery Point No. 1 at the request of the customer.

Comment date: July 29, 1996, in accordance with Standard Paragraph E at the end of this notice.

8. Public Service Electric and Gas Company

[Docket No. ER96–2279–000]

Take notice that Public Service Electric and Gas Company (PSE&G) of Newark, New Jersey on July 1, 1996, tendered for filing an agreement for the sale of capacity and energy to LG&E Power Marketing Inc. (LPM), pursuant to the PSE&G Bulk Power Service Tariff, presently on file with the Commission.

PSE&G further requests waiver of the Commission's Regulations such that the agreement can be made effective as of July 1, 1996.

Copies of the filing have been served upon LPM and the New Jersey Board of Public Utilities.

Comment date: July 29, 1996, in accordance with Standard Paragraph E at the end of this notice.

9. Washington Water Power and Company

[Docket No. ER96–2280–000]

Take notice that on July 1, 1996, Washington Water Power Company tendered for filing a signed service agreement under FERC Electric Tariff Volume No. 4 with CNG Power Services Corp.

Comment date: July 29, 1996, in accordance with Standard Paragraph E at the end of this notice.

10. Union Electric Company

[Docket No. ER96–2307–000]

Take notice that on July 2, 1996, Union Electric Company tendered for filing a Notice of Cancellation of Rate Schedule FERC No. 156.

Comment date: July 29, 1996, in accordance with Standard Paragraph E at the end of this notice.

11. EMC Gas Transmission Company

[Docket No. ER96–2320–000]

Take notice that on July 5, 1996, EMC Gas Transmission Company tendered for filing an Application for Blanket Authorization, Certain Waivers and an Order Approving Rate Schedule.

Comment date: July 29, 1996, in accordance with Standard Paragraph E at the end of this notice.

12. Northeast Utilities Service Company

[Docket No. ER96–2338–000]

Take notice that on July 8, 1996, Northeast Utilities Service Company (NUSCO), tendered for filing a Service Agreement to provide Long-Term Firm Point-to-Point Transmission Service to The Connecticut Light and Power Company, Western Massachusetts Electric Company, Holyoke Water Power Company, Holyoke Power and Electric Company and Public Service Company of New Hampshire (together, the NU System Companies) under the NU System Companies' Transmission Service Tariff No. 8. The Service Agreement provides for the delivery of a sale of power from the NU System Companies to the Suffolk County Electrical Agency.

NUSCO states that a copy of this filing has been mailed to the NU System Companies.

Comment date: July 29, 1996, in accordance with Standard Paragraph E at the end of this notice.

13. Commonwealth Edison Company

[Docket No. ER96–2339–000]

Take notice that on July 8, 1996, Commonwealth Edison Company (ComEd), tendered for filing Second Revised Schedules 5, 6, and 7 to, and Third Revised Sheet 7 of, its PS–1 Tariff.

ComEd requests an effective date of July 9, 1996 and has therefore requested that the Commission waive the Commission's notice requirement. Copies of this filing have been served on the Illinois Commerce Commission and all customers served under ComEd's PS–1 Tariff.

Comment date: July 29, 1996, in accordance with Standard Paragraph E at the end of this notice.

14. Midwest Energy, Inc.

[Docket No. ER96–2347–000]

Take notice that on July 9, 1996, Midwest Energy, Inc. (Midwest) tendered for filing an executed Service Agreement for Opportunity Sales Service between Midwest and the City of Oakley.

Comment date: July 29, 1996, in accordance with Standard Paragraph E at the end of this notice.

15. Atlantic City Electric Company

[Docket No. ER96–2348–000]

Take notice that on July 9, 1996, Atlantic City Electric Company (Atlantic Electric), tendered for filing a service agreement under which Atlantic Electric will provide firm point-to-point transmission service to Vineland Municipal Electric Utility (Vineland).

Atlantic Electric states that it has served a copy of the agreement on Vineland and the New Jersey Board of Public Utilities.

Comment date: July 29, 1996, in accordance with Standard Paragraph E at the end of this notice.

16. The Cleveland Electric Illuminating Company

[Docket No. ER96–2349–000]

Take notice that on July 9, 1996, The Cleveland Electric Illuminating Company (CEI), filed pursuant to Section 205 of the Federal Power Act and Part 35 of the FERC's Regulations thereunder electric power service agreements between CEI and Niagara Mohawk Power Corporation, Jersey Central Power & Light Company, Metropolitan Edison Company and Pennsylvania Electric Company, Allegheny Power System Companies, PECO Energy Company, and Delmarva Power & Light Company. CEI requests an effective date of the agreements of July 8, 1996.

Comment date: July 29, 1996, in accordance with Standard Paragraph E at the end of this notice.

17. CMS Electric Marketing Company

[Docket No. ER96–2350–000]

Take notice that on July 9, 1996, CMS Electric Marketing Company tendered for filing a Petition for Waivers, Blanket Approvals, And Acceptance of Rate Schedule.

Comment date: July 29, 1996, in accordance with Standard Paragraph E at the end of this notice.

18. The Washington Water Power Co.

[Docket No. ER96–2351–000]

Take notice that on July 9, 1996, The Washington Water Power Company (WWP), tendered for filing with the Federal Energy Regulatory Commission pursuant to 18 CFR 35.12, an amendment to the above referenced docket. The purpose of the amended filing is to clarify the language which describes the term of the Agreement.

WWP requests that the Commission accept the amended filing effective June 16, 1996 and waive the 60-day notice requirement. No parties will be adversely effected by the granting of this waiver.

Comment date: July 29, 1996, in accordance with Standard Paragraph E at the end of this notice.

19. Public Service Electric and Gas Company

[Docket No. ER96–2352–000]

Take notice that on July 9, 1996, Public Service Electric and Gas Company (PSE&G), tendered for filing an agreement to provide non-firm transmission service to Pennsylvania Power & Light Company, pursuant to PSE&G's Point-to-Point Transmission Tariff presently on file with the Commission in Docket No. ER96–1320–000.

PSE&G further requests waiver of the Commission's Regulations such that the agreements can be made effective as of the date on the agreement.

Comment date: July 29, 1996, in accordance with Standard Paragraph E at the end of this notice.

20. Puget Sound Power & Light Company

[Docket No. ER96–2353–000]

Take notice that on July 9, 1996, Puget Sound Power & Light Company, tendered for filing an agreement amending its wholesale for resale power contract with the Port of Seattle (Purchaser). A copy of the filing was served on Purchaser.

Puget states that the agreement changes the term of the wholesale for resale power contract.

Comment date: July 29, 1996, in accordance with Standard Paragraph E at the end of this notice.

21. Florida Power Corporation

[Docket No. ER96–2354–000]

Take notice that on July 9, 1996, Florida Power Corporation (Florida Power), tendered for filing a list of its service agreements previously in effect under its T–2 Transmission Tariff with a request for Commission re-designation of those agreements under either its open access transmission Tariff 4 or Tariff 5.

Comment date: July 29, 1996, in accordance with Standard Paragraph E at the end of this notice.

22. Northern Indiana Public Service Company

[Docket No. ER96–2355–000]

Take notice that on July 9, 1996, Northern Indiana Public Service Company, tendered for filing an executed Service Agreement between Northern Indiana Public Service Company and The Toledo Edison Company.

Under the Service Agreement, Northern Indiana Public Service Company agrees to provide services to The Toledo Edison Company under Northern Indiana Public Service Company's Power Sales Tariff, which was accepted for filing by the Commission and made effective by Order dated August 17, 1995 in Docket No. ER95–1222–000. Northern Indiana Public Service Company and The Toledo Edison Company request waiver of the Commission's sixty-day notice requirement to permit an effective date of July 9, 1996.

Copies of this filing have been sent to the Indiana Utility Regulatory Commission and the Indiana Office of Utility Consumer Counselor.

Comment date: July 29, 1996, in accordance with Standard Paragraph E at the end of this notice.

23. Northern Indiana Public Service Company

[Docket No. ER96–2356–000]

Take notice that on July 9, 1996, Northern Indiana Public Service Company, tendered for filing an executed Service Agreement between Northern Indiana Public Service Company and the Cleveland Electric Illuminating Company.

Under the Service Agreement, Northern Indiana Public Service Company agrees to provide services to The Cleveland Electric Illuminating Company under Northern Indiana Public Service Company's Power Sales Tariff, which was accepted for filing by the Commission and made effective by Order dated August 17, 1995 in Docket No. ER95–1222–000. Northern Indiana Public Service Company and The Cleveland Electric Illuminating Company request waiver of the Commission's sixty-day notice requirement to permit an effective date of July 9, 1996.

Copies of this filing have been sent to the Indiana Utility Regulatory Commission and the Indiana Office of Utility Consumer Counselor.

Comment date: July 29, 1996, in accordance with Standard Paragraph E at the end of this notice.

24. Virginia Electric and Power Company

[Docket No. ER96–2358–000]

Take notice that on July 10, 1996, Virginia Electric and Power Company (Virginia Power), tendered for filing a Service Agreement between PanEnergy Power Services, Inc. and Virginia Power, dated May 15, 1996, under the Power Sales Tariff to Eligible Purchasers dated May 27, 1994. Under the tendered Service Agreement Virginia Power agrees to provide services to PanEnergy Services, Inc. under the rates, terms and conditions of the Power Sales Tariff as agreed by the parties pursuant to the terms of the applicable Service Schedules included in the Power Sales Tariff.

Copies of the filing were served upon the Virginia State Corporation

Commission and the North Carolina Utilities Commission.

Comment date: July 29, 1996, in accordance with Standard Paragraph E at the end of this notice.

25. New England Power Company

[Docket No. ER96–2359–000]

Take notice that on July 10, 1996, New England Power Company, filed Service Agreements and Certificates of Concurrence with Cinergy Corporation under NEP's FERC Electric Tariffs, Original Volume Nos. 5 and 6.

Comment date: July 29, 1996, in accordance with Standard Paragraph E at the end of this notice.

26. The Cleveland Electric Illuminating Company

[Docket No. ER96–2360–000]

Take notice that on July 10, 1996, The Cleveland Electric Illuminating Company (CEI), filed pursuant to Section 205 of the Federal Power Act and Part 35 of the FERC's Regulations thereunder electric power service agreements between CEI and Virginia Electric and Power Company. CEI requests an effective date of the agreements of July 8, 1996.

Comment date: July 29, 1996, in accordance with Standard Paragraph E at the end of this notice.

27. New York State Electric & Gas Corporation

[Docket No. ER96–2371–000]

Take notice that on July 11, 1996, New York State Electric & Gas Corporation (NYSEG), tendered for filing pursuant to 35.12 of the Federal Energy Regulatory Commission's Rules of Practice and Procedure, 18 CFR 35.12 (1995), as an initial rate schedule, an agreement with NorAm Energy Services, Inc. (NES). The agreement provides a mechanism pursuant to which the parties can enter into separately scheduled transactions under which NYSEG will sell to NES and NES will purchase from NYSEG other capacity and associated energy or energy only as the parties may mutually agree.

NYSEG requests that the agreement become effective on July 12, 1996, so that the parties may, if mutually agreeable, enter into separately scheduled transactions under the agreement. NYSEG has requested waiver of the notice requirements for good cause shown.

NYSEG served copies of the filing upon the New York State Public Service Commission and NES.

Comment date: July 29, 1996, in accordance with Standard Paragraph E at the end of this notice.

28. Enova Energy, Inc.

[Docket No. ER96–2372–000]

Take notice that on July 11, 1996, Enova Energy, Inc. (Enova), tendered for filing an application for waivers and blanket approvals under regulations of the Commission and for an order accepting its FERC Electric Rate Schedule No. 1. Enova is an affiliate of San Diego and Electric Company.

Enova intends to engage in electric capacity and energy transactions as a marketer. In these transactions Enova intends to charge market rates as mutually agreed to by Enova and the purchaser. All other terms of the transaction would also be determined by negotiation between the parties. All sales and purchases will be arms-length transactions.

Comment date: July 29, 1996, in accordance with Standard Paragraph E at the end of this notice.

29. Non-Replacement Energy Agreement between PJM Companies and Electric Clearinghouse, Inc.

[Docket No. ER96–2373–000]

Take notice that on July 11, 1996, the Pennsylvania-New Jersey-Maryland (PJM) Interconnection Association filed, on behalf of the signatories to the PJM Agreement, a Non-Replacement Energy Agreement between Electric Clearinghouse, Inc. and Public Service Electric and Gas Company, PECO Energy Company, Pennsylvania Power & Light Company, Baltimore Gas and Electric Company, Pennsylvania Electric Company, Metropolitan Edison Company, Jersey Central Power and Light Company, Potomac Electric Power Company, Atlantic City Electric Company, and Delmarva Power & Light Company. The PJM Companies request an effective date of August 1, 1996.

Comment date: July 29, 1996, in accordance with Standard Paragraph E at the end of this notice.

30. Non-Replacement Energy Agreement between PJM Companies and Morgan Stanley Capitol Group, Inc.

[Docket No. ER96–2374–000]

Take notice that on July 11, 1996, the Pennsylvania-New Jersey-Maryland (PJM) Interconnection Association filed, on behalf of the signatories to the PJM Agreement, a Non-Replacement Energy Agreement between Morgan Stanley Capital Group, Inc. and Public Service Electric and Gas Company, PECO Energy Company, Pennsylvania Power & Light Company, Baltimore Gas and Electric Company, Pennsylvania Electric Company, Metropolitan Edison Company, Jersey Central Power and Light Company, Potomac Edison Power Company, Atlantic City Electric Company, and Delmarva Power & Light company. The PJM Companies request an effective date of August 1, 1996.

Comment date: July 29, 1996, in accordance with Standard Paragraph E at the end of this notice.

31. Non-Replacement Energy Agreement between the PJM Companies and PanEnergy Power Services, Inc.

[Docket No. ER96–2375–000]

Take notice that on July 11, 1996, the Pennsylvania-New Jersey-Maryland (PJM) Interconnection Association filed, on behalf of the signatories to the PJM Agreement, a Non-Replacement Energy Agreement between PanEnergy Power Services, Inc. and Public Service Electric and Gas Company, PECO Energy Company, Pennsylvania Power & Light Company, Baltimore Gas and Electric Company, Pennsylvania Electric Company, Metropolitan Edison Company, Jersey Central Power & Light Company, Potomac Electric Power Company, Atlantic City Electric Company, and Delmarva Power & Light Company. The PJM Companies request an effective as of August 1, 1996.

Comment date: July 29, 1996, in accordance with Standard Paragraph E at the end of this notice.

32. Kamine/BesiCorp Beaver Falls L.P.

[Docket No. QF91–172–002]

Take notice that on June 11, 1996, Kamine/BesiCorp Beaver Falls L.P. tendered for filing an amendment to the Petition for Temporary Waiver of Operating and Efficiency Standards in the above-referenced docket.

Comment date: July 29, 1996, in accordance with Standard Paragraph E at the end of this notice.

Standard Paragraph

E. Any person desiring to be heard or to protest said filing should file a motion to intervene or protest with the Federal Energy Regulatory Commission, 888 First Street, N.E., Washington, D.C. 20426, in accordance with Rules 211 and 214 of the Commission's Rules of Practice and Procedure (18 CFR 385.211 and 18 CFR 385.214). All such motions or protests should be filed on or before the comment date. Protests will be considered by the Commission in determining the appropriate action to be taken, but will not serve to make protestants parties to the proceeding. Any person wishing to become a party must file a motion to intervene. Copies of this filing are on file with the

Commission and are available for public inspection.

Lois D. Cashell,

Secretary.

[FR Doc. 96–18524 Filed 7–19–96; 8:45 am]

BILLING CODE 6717–01–P

Notice of Amendment of License

July 16, 1996.

Take notice that the following hydroelectric application has been filed with the Commission and is available for public inspection:

a. *Application Type:* Amendment to License.

b. *Project No:* 2131–008.

c. *Date Filed:* May 30, 1996.

d. *Applicant:* Wisconsin Electric Power Company.

e. *Name of Project:* Kingford Hydroelectric Project.

f. *Location:* The project is located on the Menominee River in Dickinson County, Michigan and Florence County, Wisconsin.

g. *Filed Pursuant to:* 18 CFR 4.200.

h. *Applicant Contact:* Ms. Rita L. Hayen, Wisconsin Electric Power Company, 231 W. Michigan, P.O. Box 2046, Milwaukee, WI 53201–2046, (414) 221–2413.

i. *FERC Contact:* Steve Hocking (202) 219–2656.

j. *Comment Date:* August 24, 1996.

k. *Description of Amendment:* Wisconsin Electric Power Company (Wisconsin Electric) filed an application to amend its license for the Kingford Hydroelectric Project. Wisconsin Electric proposes to grant a perpetual conservation easement for 1,366 acres of project lands to the Wisconsin Department of Natural Resources (WDNR). The WDNR would manage this land as part of the Spread Eagle Barrens State Natural Area. The 1,366 acres are located at the lower end of the Pine River where it joins the Menominee River and along the western shoreline of the Menominee River, south of the Pine River. The exact location of the parcel can be obtained from the applicant or the FERC contact listed above.

1. This notice also consists of the following standard paragraphs: B, C1, and D2.

B. Comments, Protests, or Motions to Intervene—Anyone may submit comments, a protest, or a motion to intervene in accordance with the requirements of Rules of Practice and Procedure, 18 CFR 385.210, 385.211, 385.214. In determining the appropriate action to take, the Commission will consider all protests or other comments filed, but only those who file a motion to intervene in accordance with the Commission's Rules may become a party to the proceeding. Any comments, protests, or motions to intervene must be received on or before the specified comment date for the particular application.

C1. Filing and Service of Responsive Documents—Any filings must bear in all capital letters the title ''COMMENTS'', ''RECOMMENDATIONS FOR TERMS AND CONDITIONS'', ''PROTEST'', OR ''MOTION TO INTERVENE'', as applicable, and the Project Number of the particular application to which the filing refers. Any of the above-named documents must be filed by providing the original and the number of copies provided by the Commission's regulations to: The Secretary, Federal Energy Regulatory Commission, 888 First Street, N.E., Washington, D.C. 20426. A copy of any motion to intervene must also be served upon each representative of the Applicant specified in the particular application.

D2. Agency Comments—Federal, state, and local agencies are invited to file comments on the described application. A copy of the application may be obtained by agencies directly from the Applicant. If an agency does not file comments within the time specified for filing comments, it will be presumed to have no comments. One copy of an agency's comments must also be sent to the Applicant's representatives.

Lois D. Cashell,

Secretary.

[FR Doc. 96–18452 Filed 7–19–96; 8:45 am]

BILLING CODE 6717–01–M

ENVIRONMENTAL PROTECTION AGENCY

[OPP–00444; FRL–5386–3]

Worker Protection Standard; Notice of Public Meetings

AGENCY: Environmental Protection Agency (EPA).

ACTION: Notice of meetings.

SUMMARY: EPA is holding a series of public meetings to solicit information from workers, growers and others regarding regulations designed to protect agricultural workers and pesticide handlers. The first meeting was held in Winter Haven, Florida on February 22, 1996. The meetings are a part of EPA's commitment to monitor and evaluate the impact and performance of the Worker Protection regulations. The public meetings are designed to provide an opportunity for those directly affected by the regulations to relay their experiences after the regulations' first full year of implementation. By reaching out to those on the frontlines and for whom these regulations are intended to provide public health protection, EPA will better understand how the program is working and where meaningful improvements should be made. The meetings are open to the public.

DATES: The following is the schedule for the remaining public meetings:

July 23, 1996, Fresno, California

July 25, 1996, Salinas, California

August 7, 1996, Portageville, Missouri

August 21, 1996, Tipton, Indiana

The date and location for a public meeting in Puerto Rico will be announced at a later date. There will not be a public meeting scheduled in Washington, DC as was previously noted.

ADDRESSES: The July 23, 1996 meeting will be held at the C.P.D.E.S. Hall, 172 West Jefferson Avenue, Fresno, California.

The July 25, 1996 meeting will be held at the Salinas Community Center, 940 N. Main Street, Salinas, California.

The August 7, 1996 meeting will be held at the University of Missouri Delta Research Center, Highway T, Portageville, Missouri.

The August 21, 1996 meeting will be held at the Tipton County Fair Grounds, 1200 South Main Street, Tipton, Indiana.

In general, registration begins at 5 p.m., and the public meetings begin at 7 p.m. Please call the contacts listed below to verify the schedule for each meeting.

FOR FURTHER INFORMATION CONTACT: By mail: Jeanne Heying (7506C), Environmental Protection Agency, 401 M St., SW., Washington, DC 20460. Telephone number: (703) 305-7164, Fax: (703) 308-2962, e:mail: heying.jeanne@epamail.epa.gov., or EPA WPS representatives in regions hosting public meetings.

California meetings: Kay Rudolph, (415) 744-1065 or Mary Grisier, (415) 744-1095.

Indiana meeting: Don Baumgartner, (312) 886-7835.

Missouri meeting: Glen Yager, (913) 551-7296 or Kathleen Fenton, (913) 551-7874.

Puerto Rico meeting: Fred Kozak, (908) 321-6769.

SUPPLEMENTARY INFORMATION:

I. Background

In 1992, EPA issued final regulations governing the protection of employees on farms, forests and nurseries, and greenhouses from occupational

exposures to agricultural pesticides. The WPS covers both workers in areas treated with pesticides, and employees who handle (mix, load, apply, etc.) pesticides. More specifically, the provisions of the Standard are intended to:

Inform employees about the hazards of pesticides:

- By requiring provisions for basic safety training, posting and distribution of information about the pesticides.

Eliminate exposure to pesticides:

- By prohibiting against the application of pesticides in a way that would cause exposure to people.
- By requiring time-limited restrictions for workers to return to areas following the application of pesticides.
- By requiring provisions for workers and handlers to wear proper protective clothing/equipment; and mitigate exposures that occur.
- By requiring arrangements for the supply of soap, water, and towels in the case of pesticide exposure.
- By requiring provisions for emergency assistance.

II. Information Sought by EPA

EPA believes that agricultural workers, handlers and growers are best able to provide unique insights on the effects of the WPS requirements. Their input will be supplemented by data generated from other sources during the course of EPA's longer-term evaluation effort. As a follow-up to the public meetings, EPA will develop a summary of information gained. These tools will be used to develop strategies for improving the administration of the WPS. The Agency is specifically interested in hearing public comment, or receiving written comment, on the following topics.

1. Assistance from regulatory partners and others involved with the WPS.
2. Usefulness of available assistance.
3. Understanding the WPS requirements.
4. Success in implementing the requirements.
5. Difficulties in implementing the requirements.
6. Suggestions to improve implementation.

III. Registration to Make Comments

Persons who wish to speak at the public meeting are encouraged to register at the meeting location. The Agency encourages parties to submit data to substantiate comments whenever possible. All comments, as well as information gathered at the public meetings will be available for public inspection from 8 a.m. to 4:30 p.m., Monday through Friday (except legal holidays) at the Public Response and Program Resource Branch, Field Operations Division, Room 1132, Crystal Mall #2, 1921 Jefferson Davis Highway, Arlington, VA.

Information submitted as part of any comment may be claimed as confidential by marking any or all of that information as Confidential Business Information (CBI). Information so marked will not be disclosed except in accordance with the procedures set forth in 40 CFR part 2. A copy of the comment that does not contain CBI must be submitted for inclusion in the public record. Information not marked confidential may be disclosed publicly by the Agency without prior notice to the submitter. The Agency anticipates that most of the comments will not be classified as CBI, and prefers that all information submitted be publicly available. Any records or transcripts of the open meetings will be considered public information and cannot be declared CBI.

IV. Structure of the Meeting

EPA will open the meeting with brief introductory comments. EPA will then invite those parties who have registered to present their comments. EPA anticipates that each speaker will be permitted 5 minutes to make comments. After each speaker, Agency and state representatives may ask the presenter questions of clarification. The Agency reserves the right to adjust the time for presenters depending on the number of speakers.

Members of the public are encouraged to submit written documentation to EPA at the meeting to ensure that their entire position goes on record in the event that does not permit a complete oral presentation.

Any information may be delivered to Jeanne Heying at the address stated earlier in this Notice.

List of Subjects

Environmental protection.

Dated: July 11, 1996.

William L. Jordan,

Director, Field Operations Division, Office of Pesticide Programs.

[FR Doc. 96–18657 Filed 7–19–96; 8:45 am]

BILLING CODE 6560–50–F

[OPP–300370A; FRL–5387–4]

Plant-Pesticides Subject to the Federal Insecticide, Fungicide, and Rodenticide Act and the Federal Food, Drug, and Cosmetic Act; Reopening of Comment Period

AGENCY: Environmental Protection Agency (EPA).

ACTION: Notice; reopening of comment period.

SUMMARY: This supplemental notice provides the public additional opportunity to comment on one aspect of EPA's approach to plant-pesticides under the Federal Insecticide, Fungicide, and Rodenticide Act (FIFRA) and the Federal Food, Drug, and Cosmetic Act (FFDCA). Specifically, EPA requests comment on additional information it is considering regarding the treatment, as inert ingredients, of ''substances introduced into the plant along with the active ingredient to confirm or ensure the presence of the active ingredient.'' Based upon this new information, EPA may decide not to treat these substances as inert ingredients or as pesticide components.

DATES: Comments identified by the docket control number [OPP-300370A] must be received on or before August 21, 1996.

ADDRESSES: Submit written comments in triplicate by mail to: Program Resources Section, Public Response and Program Resources Branch, Field Operations Division (7506C), Environmental Protection Agency, 401 M St., SW., Washington, DC. In person, bring comments to: Rm. 1132, Crystal Mall #2, 1921 Jefferson Davis Highway, Arlington, VA 22202.

Comments and data may also be submitted electronically by sending electronic mail (e-mail) to: opp-docket@epamail.epa.gov. Electronic comments must be submitted as an ASCII file avoiding the use of special characters and any form of encryption. Comments and data will also be accepted on disks in WordPerfect in 5.1 file format or ASCII file format. All comments and data in electronic form must be identified by the docket number ''OPP–300370A'' No Confidential Business Information (CBI) should be submitted through e-mail. Electronic comments on this document may be filed online at many Federal Depository Libraries. Additional information on electronic submissions can be found in Unit III. of this document.

Information submitted as a comment concerning this document may be claimed confidential by marking any part or all of that information as CBI.

Information so marked will not be disclosed except in accordance with procedures set forth in 40 CFR part 2. A copy of the comment that does not contain CBI must be submitted for inclusion in the public record. Information not marked confidential may be disclosed publicly by EPA without prior notice. All written comments will be available for public inspection in Rm. 1132 at the Virginia address given above from 8 a.m. to 4 p.m., Monday through Friday, excluding legal holidays.

FOR FURTHER INFORMATION CONTACT: By mail: Bernice Slutsky, Science and Policy Staff, Office of Prevention, Pesticides and Toxic Substances (7101), Environmental Protection Agency, 401 M St., SW., Washington, DC 20460. Office location, telephone number, and e-mail address: Rm. E-627, 401 M St., SW., Washington, DC, Telephone: (202-260-6900), e-mail: slutsky.bernice@epamail.epa.gov.

SUPPLEMENTARY INFORMATION:

I. Regulatory Background

In the Federal Register of November 23, 1994 (59 FR 60496) (FRL-4755-2) EPA issued proposed policies and regulations addressing substances that plants use to protect themselves against pests. EPA termed these substances ''plant-pesticides.'' The proposed regulations were issued under FIFRA, 7 U.S.C. 136w(b) (see 59 FR 60519) (FRL-4755-3) and FFDCA, 21 U.S.C. 346a (see 59 FR 60535, 60542, and 60545) (FRL-4758-8, FRL-4755-5, and FRL-4755-4).

Because of the unique nature of plant-pesticides, EPA proposed to create a new part in the Code of Federal Regulations at 40 CFR part 174, specifically for plant-pesticides. The new part 174 would set forth the scope of regulation, regulatory requirements, criteria, and procedures applicable to plant-pesticides under FIFRA and FFDCA. In the FIFRA and FFDCA proposed rules, EPA proposed to define plant-pesticides as follows:

> Plant-pesticide means a pesticidal substance that is produced in a living plant and the genetic material necessary for the production of the substance, where the substance is intended for use in the living plant (59 FR 60534, 60542, 60544, and 60545).

EPA also proposed to define inert ingredients in the context of plant-pesticides as follows:

> Inert ingredient, when referring to plant-pesticides only, means any substance, such as a selectable marker, other than the active ingredient, and the genetic material necessary for the production of the substance, that is intentionally introduced into a living plant along with the active ingredient, where the substance is used to confirm or ensure the presence of the active ingredient (59 FR 60534 and 60545).

II. Rationale

Since it published the proposed policy and regulations in November 1994, EPA has acquired additional information that has caused it to reevaluate its treatment of substances ''intentionally introduced into a living plant along with the active ingredient, where the substance is used to confirm or ensure the presence of the active ingredient.'' Based upon this information, EPA is reconsidering whether to treat such substances and the genetic material necessary to produce them as a pesticide component (such as an inert ingredient).

FIFRA and FFDCA contain only general definitions of the relevant terms. FIFRA section 2(m) defines a ''pesticide'' as any substance or mixture of substances intended ''for preventing, destroying, repelling, or mitigating any pest'' or ''for use as a plant regulator, defoliant, or desiccant . . .'' (7 U.S.C. 136(u)). An ''active ingredient'' is defined as an ''ingredient which will prevent, destroy, repel, or mitigate any pest'' (7 U.S.C. 136(a)). FIFRA defines ''inert ingredient'' to mean ''an ingredient which is not active'' (7 U.S.C. 136(m)). Under the FFDCA, a substance is a ''pesticide chemical'' if it is a pesticide within the meaning of FIFRA (21 U.S.C. 321(q)).

Although these definitions provide some guidance, they do not clearly address whether substances added with the active ingredient to confirm or ensure the presence of the active ingredient (e.g., selectable markers) should be considered inert ingredients. When Congress created the FIFRA definitions of pesticide and inert ingredients, it did not consider how the statute would be applied to such substances since the technology that could utilize these substances as selectable markers had not yet been invented. Where a statute is ambiguous, EPA as the administering agency is entitled to make a reasonable policy choice in interpreting the statute (*Chevron, U.S.A. Inc. v. Natural Resources Defense Council*, 467 U.S. 837, 843 n. 9, 845).

In this instance the difficulties associated with interpreting ambiguous statutory terms are compounded by the unique nature of plant-pesticides and the substances introduced to confirm or ensure their presence in the plant. Substances used to confirm or ensure the presence of a plant-pesticide in a plant are generally termed ''selectable markers'' and will hereafter be referred to by the term, ''selectable markers.'' Selectable markers are introduced into the plant or plant cells by the process of transformation at the same time as the genetic material that confers the desired trait (e.g., a pesticidal trait). A selectable marker's purpose is to provide a mechanism to distinguish cells that have successfully incorporated the genetic material for the desired trait during the transformation from the vast majority of cells that have not incorporated the trait. For example, the selection process may depend upon the cells, after they have been transformed, being resistant to an agent that is lethal to non-transformed cells. Alternatively, cells, after they have been transformed, may acquire the ability to produce a unique substance that allows them to be distinguished from cells that have not been transformed and therefore do not produce the unique substance. Usually this selection process occurs only once in the very early stages of product development.

Beyond its use for eliminating the large number of non-transformed cells, a selectable marker is generally not necessary for expression of the desired trait; i.e., selectable markers are not necessary for the pesticidal function of the plant-pesticide in the plant nor do they modify or enhance the pesticidal activity of the active ingredient. Selectable markers may even be lost from the plant during subsequent breeding with no effect on the plant-pesticidal active ingredient.

Existing regulations do not shed much light on how to treat substances introduced with the plant-pesticide active ingredient (see, e.g., 40 CFR 152.3(s), 153.2(m), 158.153(f), 177.3, and 180.1(k)). Although EPA has had extensive experience with inert ingredients in the context of traditional chemical pesticides, the unique nature of plant-pesticides makes it difficult to apply the regulatory framework that has been used with chemical pesticides.

Because of the ambiguous nature of the controlling statutory provisions and the unique nature of plant-pesticides and substances such as selectable markers, EPA believes it is reasonable to conclude that a substance used to confirm or ensure the presence of the active ingredient, and the genetic material necessary to produce that substance, are not components of a pesticide. EPA weighed a number of factors in reaching this conclusion, including the function of these substances in plants, the effects of these substances on the performance of the plant-pesticide, and the duration of that effect. Substances such as selectable markers are intentionally introduced

into plants to aid in the selection of plants or plant cells that contain the desired genetic material for the plant-pesticide. They do not have pesticidal properties themselves and are not necessary to the function of the plant-pesticide in the plant. Generally they are of no use in modifying or enhancing the pesticidal activity of the plant-pesticide and may even be lost later in the product development stage with no effect upon pesticidal activity. Substances used to confirm or ensure the presence of a plant-pesticide are frequently used only on a one-time basis very early in the development of a new plant variety, for example during the introduction of genetic material in the initial genetic transformation of plant cells or tissue. Although a substance such as a selectable marker is introduced at the same time as the active ingredient, that concomitant event does not necessarily convert selectable markers into pesticide ingredients.

The comments received in response to the 1994 proposal also helped to focus EPA's concern about the classification of selectable markers as inert ingredients. The comments addressing treatment of selectable markers as inert ingredients raised a range of issues. These issues included minimizing the potential for duplication of reviews with FDA; inappropriateness of the Agency's inert policy for chemical pesticides for substances such as selectable markers; and reservation about whether risks associated with selectable markers would be adequately addressed should they be considered inert ingredients. EPA will respond to these comments together with comments received in response to this Notice in the preamble of the final rule.

Should EPA decide that substances such as selectable markers are not inert ingredients or pesticide components, FDA rather than EPA would have direct jurisdiction over the presence of those substances in food products. This would result in a more consistent approach to the regulatory oversight of substances used to confirm or ensure the presence of a plant-pesticide, e.g., selectable markers.

Should EPA decide that substances, and related genetic material, used to confirm and ensure the presence of the plant-pesticide should not be classified as part of a pesticide, the regulatory text in the final rules under FIFRA and FFDCA would be modified to reflect this decision, including defining the plant-pesticide product as the plant-pesticide active ingredient.

III. Public Docket

A record has been established for this document under docket number ''OPP–300370A'' (including comments and data submitted electronically as described below). A public version of this record, including printed, paper versions of electronic comments, which does not include any information claimed as CBI, is available for inspection from 8 a.m. to 4:30 p.m., Monday through Friday, excluding legal holidays. The public record is located in Rm. 1132 of the Public Response and Program Resources Branch, Field Operations Division (7506C), Office of Pesticide Programs, Environmental Protection Agency, Crystal Mall #2, 1921 Jefferson Davis Highway, Arlington, VA.

Electronic comments can be sent directly to EPA at:

opp-docket@epamail.epa.gov

Electronic comments must be submitted as an ASCII file avoiding the use of special characters and any form of encryption.

The official record for this document, as well as the public version, as described above will be kept in paper form. Accordingly, EPA will transfer all comments received electronically into printed, paper form as they are received and will place the paper copies in the official rulemaking record which will also include all comments submitted directly in writing. The official rulemaking record is the paper record maintained at the address in ''ADDRESSES'' at the beginning of this document.

List of Subjects

Environmental protection, Biotechnology, Plant-pesticides, Plants.

Dated: July 15, 1996.

Lynn R. Goldman,

Assistant Administrator for Prevention, Pesticides and Toxic Substances.

[FR Doc. 96–18394 Filed 7–19–96; 8:45 am]

BILLING CODE 6560–50–F

[FRL–5540–8]

Proposed Settlement Under Section 122(h)(1) of the Comprehensive Environmental Response, Compensation and Liability Act; in the Matter of Union Steel Products, Inc. Site

AGENCY: Environmental Protection Agency.

ACTION: Request for public comment.

SUMMARY: Notice of Settlement: in accordance with Section 122(I)(1) of the Comprehensive Environmental Response, Compensation and Liability Act of 1980, as amended (''CERCLA''), notice is hereby given of a settlement concerning past response costs at the Union Steel Products, Inc. Site in Albion, Michigan. This proposed agreement has been forwarded to the Attorney General for the required prior written approval for this Settlement, as set forth under Section 122(g)(4) of CERCLA.

DATES: Comments must be provided on or before August 21, 1996.

ADDRESSES: Comments should be addressed to the Docket Clerk, Mail Code MFA–10J, U.S. Environmental Protection Agency, 77 West Jackson Boulevard, Chicago, Illinois, 60604, and should refer to: In the Matter of Union Steel Products, Inc. Site, Docket No.

FOR FURTHER INFORMATION CONTACT: Kurt N. Lindland, Mail Code CS–29A, U.S. Environmental Protection Agency, 77 West Jackson Boulevard, Chicago, Illinois 60604.

SUPPLEMENTARY INFORMATION: The following parties executed binding certifications of their consent to participate in the settlement: Union Steel Products, Inc. and John Kamakian.

These parties will pay $250,000 in settlement payments for response costs related to the Union Steel Products, Inc. Site, if the United States Environmental Protection Agency determines that it will not withdraw or withhold its consent to the proposed settlement after consideration of comments submitted pursuant to this notice.

U.S. EPA may enter into this settlement under the authority of Section 122(h) of CERCLA. Section 122(h)(1) authorizes EPA to settle any claims under Section 107 of CERCLA where such claim has not been referred to the Department of Justice. Pursuant to this authority, the agreement proposes to settle with parties who are potentially responsible for costs incurred by EPA at the Union Steel Products, Inc. Site.

A copy of the proposed administrative order on consent and additional background information relating to the settlement, including a list of parties to the settlement, are available for review and may be obtained in person or by mail from Kurt N. Lindland, Mail Code CS–29A, U.S. Environmental Protection Agency, 77 West Jackson Boulevard, Chicago, Illinois 60604.

The U.S. Environmental Protection Agency will receive written comments relating to this settlement for thirty days from the date of publication of this notice.

Authority: The Comprehensive Environmental Response, Compensation, and

Liability Act of 1980, as amended, 42 U.S.C. 9601 *et seq.*

Wendy Carney,

Acting Director, Superfund Division

[FR Doc. 96–18514 Filed 7–19–96; 8:45 am]

BILLING CODE 6560–50–M

[FRL–5539–4]

Notice of Proposed NPDES General Permits for Discharges Resulting From Implementing Corrective Action Plans for Cleanup of Petroleum UST Systems in Texas (TXG830000), Louisiana (LAG830000), Oklahoma (OKG830000) and New Mexico (NMG830000)

AGENCY: Environmental Protection Agency (EPA).

ACTION: Notice of draft NPDES general permits.

SUMMARY: EPA Region 6 is proposing to issue general NPDES permits authorizing discharges resulting from implementing Corrective Action Plans for the cleanup of Petroleum UST Systems in Texas, Louisiana, Oklahoma and New Mexico. A Petroleum UST System is an underground storage tank system that contains petroleum or a mixture of petroleum with de minimis quantities of other regulated substances. Such systems include those containing motor fuels, jet fuels, distillate fuel oils, residual fuel oils, lubricants, petroleum solvents and used oils. As proposed, the permits place limits on benzene, Total BTEX and pH for all discharges, as well as limits on polynuclear aromatic hydrocarbons (PAH) for discharges from cleanups of Petroleum UST Systems other than gasoline, jet fuel and kerosene. Additional limits include those on lead and Total Petroleum Hydrocarbons in the Texas permit, lead and TOC in the Louisiana permit, Total Organic Carbon and Total Phenols in the Oklahoma permit, and lead, Chemical Oxygen Demand, No Visible Oil Sheen, as well as a biomonitoring requirement, in the New Mexico permit.

DATES: Comments on these proposed permits must be submitted by September 20, 1996.

ADDRESSES: Comments on these proposed permits should be sent to the Regional Administrator, EPA Region 6, 1445 Ross Avenue, Dallas, Texas 75202–2733.

FOR FURTHER INFORMATION CONTACT: Ms. Ellen Caldwell, EPA Region 6 1445 Ross Avenue, Dallas Texas 75202–2733, telephone (214) 665–7513.

Copies of the draft permits and/or an explanatory fact sheet may be obtained from Ms. Caldwell. In addition, the current administrative record on the proposal is available for examination at the Region's Dallas offices during normal working hours after providing Ms. Caldwell 24 hours advanced notice.

SUPPLEMENTARY INFORMATION: Regulated categories and entities include:

Category	Examples of regulated entities
Industry	Operators of facilities discharging waste waters resulting from the cleanup of underground storage tank systems that contain petroleum substances, such as motor fuels, jet fuels and fuel oils.

This table is not intended to be exhaustive, but rather provides a guide for readers regarding entities likely to be regulated by this action. This table lists the types of entities that EPA is now aware could potentially be regulated by this action. Other types of entities not listed in the table could also be regulated. To determine whether your (facility, company, business, organization, etc.) is regulated by this action, you should carefully examine the applicability criteria in Part I, Section A.1 of these permits. If you have questions regarding the applicability of this action to a particular entity, consult the person listed in the preceding **FOR FURTHER INFORMATION CONTACT** section.

Section 301(a) of the Clean Water Act (CWA or the Act), 33 U.S.C. 1311(a), makes it unlawful to discharge pollutants to waters of the United States in the absence of authorizing permits. CWA section 402, 33 U.S.C. 1342, authorizes EPA to issue National Discharge Elimination System (NPDES) permits allowing discharges on condition they will meet certain requirements, including CWA sections 301, 304, and 401 (33 U.S.C. 1331, 1314 and 1341). Those statutory provisions require that NPDES permits include effluent limitations requiring that authorized discharges: (1) meet standards reflecting levels of technological capability, (2) comply with EPA-approved state water quality standards and (3) comply with other state requirements adopted under authority retained by states under CWA 510, 33 U.S.C. 1370.

Two types of technology-based effluent limitations must be included in the permits proposed here. With regard to conventional pollutants, i.e., pH, BOD, oil and grease, TSS and fecal coliform, CWA section 301 (b)(1)(E) requires effluent limitations based on ''best conventional pollution control technology'' (BCT). With regard to nonconventional and toxic pollutants, CWA section 301(b)(2) (A), (C), and (D) require effluent limitations based on ''best available pollution control technology economically achievable'' (BAT), a standard which generally represents the best performing existing technology in an industrial category or subcategory. BAT and BCT effluent limitations may never be less stringent than corresponding effluent limitations based on best practicable control technology (BPT), a standard applicable to similar discharges prior to March 31, 1989 under CWA 301(b)(1)(A).

National guidelines establishing BPT, BCT and BAT standards have not been promulgated for discharges from Petroleum UST System cleanups. The BCT and BAT requirements for these discharges have, therefore, been established using best professional judgement, as required by CWA section 402(a)(1). EPA Office of Water Enforcement and Permits and Office of Underground Storage Tanks has developed and issued ''Model NPDES Permit for Discharges Resulting from the Cleanup of Gasoline Released from Underground Storage Tanks'', July 11, 1989. That model permit and fact sheet established treatment technologies, treatment costs, parameters to be limited and permit limits for discharges resulting from the cleanup of gasoline released from underground storage tanks. The information contained in that model permit and fact sheet has been used to establish BCT and BAT permit requirements for the NPDES general permits being proposed today for discharges resulting from cleanup of Petroleum UST Systems.

The following limits are proposed:

	Daily average	Daily maximum
Texas (TXG830000)		
Benzene	5 µg/l (1)	5µg/l (1).
Total BTEX	100 µg/l	100 µg/l.
Total petroleum hydrocarbons	15 mg/l	15 mg/l.
Total lead	250 µg/l	250 µg/l.

	Daily average	Daily maximum
Polynuclear aromatic hydrocarbons	10 µg/l (2)	10 µg/l (2).
pH 6.0—9.0 std. units		
Louisiana (LAG830000)		
Benzene	5 µg/l (1)	5 µg/l (1).
Total BTEX	100 µg/l	100 µg/l.
Total lead	50 µg/l	50 µg/l.
TOC	50 mg/l	50 mg/l.
Polynuclear aromatic hydrocarbons	10 µg/l (2)	10 µg/l (2).
pH 6.0—9.0 std. units		
Oklahoma (OKG830000)		
Benzene	5 µg/l (1)	5 µg/l (1).
Total BTEX	100 µg/l	100 µg/l.
Polynuclear aromatic hydrocarbons	10 µg/l (2)	10 µg/l (2).
Total phenols	0.15 mg/l	0.25 mg/l.
Total organic carbon	75 mg/l	95 mg/l.
pH 6.5—9.0 std. units		
New Mexico (NMG83000)		
Benzene	5 µg/l (1)	5 µg/l (1).
Total BTEX	100 µg/l	100 µg/l.
Polynuclear aromatic hydrocarbons	10 µg/l (2)	10 µg/l (2).
pH 6.0—9.0 std. units		
Chemical oxygen demand (COD)	125 mg/l	125 mg/l.
Total lead	50 µg/l	50 µg/l.
No visible oil sheen		
Biomonitoring (48 hour acute)	monitor	

(1) For Discharge Monitoring Report calculations and reporting requirements for benzene, analytical test results less than 10 µg/l may be reported as zero.

(2) The Daily Max limit and monitoring requirement for PAH's do not apply to discharges from the cleanup of Petroleum UST Systems containing only gasoline, jet fuel and/or kerosene. The daily max value of any of the following PAH's shall not exceed 10 µg/l: acenaphthene, acenaphthylene, anthracene, benzo(a)anthracene, benzo(b)fluoranthene, benzo(k)fluoranthene, benzo(ghi)perylene, benzo(a)pyrene, chrysene, dibenzo(a,h)anthracene, fluoranthene, fluorene, indeno(1,2,3,cd)pyrene, naphthalene, phenanthrene, pyrene.

Other Legal Requirements

A. State Certification

Under section 401(a)(1) of the Act, EPA may not issue an NPDES permit until the State in which the discharge will originate grants or waives certification to ensure compliance with appropriate requirements of the Act and State law. Section 301(b)(1)(C) of the Act requires that NPDES permits contain conditions that ensure compliance with applicable state water quality standards or limitations. The proposed permits contain limitations intended to ensure compliance with state water quality standards and has been determined by EPA Region 6 to be consistent with the applicable state's water quality standards and the corresponding implementation plans. The Region has solicited certification from the Texas Natural Resources Conservation Commission for TXG830000, the Louisiana Department of Natural Resources for LAG830000, the Oklahoma Department of Environmental Quality for OKG830000 and the New Mexico Environment Department for NMG830000.

B. Endangered Species Act

The proposed limits are sufficiently stringent to assure state water quality standards, both for aquatic life protection and human health protection, will be met. The effluent limitations established in these permits ensure protection of aquatic life and maintenance of the receiving water as an aquatic habitat. The Region finds that adoption of the proposed permits is unlikely to adversely affect any threatened or endangered species or its critical habitat. EPA is seeking written concurrence from the United States Fish and Wildlife Service and National Marine Fisheries Service on this determination.

C. Historic Preservation Act

Facilities which adversely affect properties listed or eligible for listing in the National Register of Historical Places are not authorized to discharge under this permit.

D. Executive Order 12866

The Office of Management and Budget (OMB) has exempted this action from the review requirements of Executive Order 12866.

E. Paperwork Reduction Act

The information collection required by this permit has been approved by OMB under the provisions of the Paperwork Reduction Act, 44 U.S.C. 3501 *et seq.*, in submission made for the NPDES permit program and assigned OMB control numbers 2040–0086 (NPDES permit application) and 2040–0004 (discharge monitoring reports).

F. Regulatory Flexibility Act

The Regulatory Flexibility Act, 5 USC 601 et seq, requires that EPA prepare a regulatory flexibility analysis for regulations that have a significant impact on a substantial number of small entities. As discussed previously in this Fact Sheet, compliance with the permit requirements will not result in a significant impact on dischargers, including small businesses, covered by

these permits. This lack of significant impact is due, in part, to the State Reimbursement Fund's reimbursement to the discharger of all NPDES permit compliance costs, except for a small deductible amount. EPA Region 6 therefore certifies, pursuant to the provisions of 5 USC 605(b), that the permits proposed today will not have a significant impact on a substantial number of small entities.

Dated: July 10, 1996.

William B. Hathaway,

Director, Water Quality Protection Division, EPA Region 6.

[FR Doc. 96–18168 Filed 7–19–96; 8:45 am]

BILLING CODE 6560–50–P

FEDERAL COMMUNICATIONS COMMISSION

Notice of Public Information Collections Being Reviewed by FCC For Extension Under Delegated Authority 5 CFR 1320 Authority, Comments Requested

July 16, 1996.

SUMMARY: The Federal Communications Commission, as part of its continuing effort to reduce paperwork burden invites the general public and other Federal agencies to take this opportunity to comment on the following proposed and/or continuing information collections, as required by the Paperwork Reduction Act of 1995, Public Law 104–13. An agency may not conduct or sponsor a collection of information unless it displays a currently valid control number. No person shall be subject to any penalty for failing to comply with a collection of information subject to the Paperwork Reduction Act (PRA) that does not display a valid control number. Comments are requested concerning (a) whether the proposed collection of information is necessary for the proper performance of the functions of the Commission, including whether the information shall have practical utility; (b) the accuracy of the Commissions burden estimates; (c) ways to enhance the quality, utility, and clarity of the information collected and (d) ways to minimize the burden of the collection of information on the respondents, including the use of automated collection techniques or other forms of information technology.

The FCC is reviewing the following information collection requirements for possible 3-year extension under delegated authority 5 CFR 1320, authority delegated to the Commission by the Office of Management and Budget (OMB).

DATES: Written comments should be submitted on or before September 20, 1996. If you anticipate that you will be submitting comments, but find it difficult to do so within the period of time allowed by this notice, you should advise the contact listed below as soon as possible.

ADDRESSES: Direct all comments to Dorothy Conway, Federal Communications Commission, Room 234, 1919 M St., NW., Washington, DC 20554 or via internet to dconway@fcc.gov.

FOR FURTHER INFORMATION CONTACT: For additional information or copies of the information collections contact Dorothy Conway at 202–418–0217 or via internet at dconway@fcc.gov.

SUPPLEMENTARY INFORMATION:

OMB Approval Number: 3060–0435.

Title: Section 80.361 Frequencies for Narrow-Band Direct-Printing (NB–DP) and data transmissions.

Form No.: N/A.

Type of Review: Extension of existing collection.

Respondents: Individuals, business or other for-profit.

Number of Respondents: 2.

Estimated Time Per Response: 2 hours.

Total Annual Burden: 4 hours.

Total Annual Cost: 0.

Needs and Uses: The reporting requirement contained in Section 80.361 is necessary to require applicants to submit a showing of need to obtain new or additional narrow-band direct-printing (NB–DP) frequencies. Applicants for new or additional NB–DP frequencies are required to show the schedule of service of each currently licensed or proposed series of NB–DP frequencies and to show a need for additional frequencies based on at least a 40% usage of existing NB–DP frequencies. The information is used to determine whether an application for a NB–DP frequency should be granted. If the collection of this information was not conducted, the FCC would have no information available regarding the use of NP–DP frequencies by public coast stations, and, therefore would be handicapped in determining whether the frequencies were being hoarded and not put into use by public coast stations.

OMB Approval Number: 3060–0263.

Title: Section 90.177 Protection of certain radio receiving locations.

Form No.: N/A.

Type of Review: Extension of existing collection.

Respondents: Individuals and households; Businesses or other for-profit; Non-profit institutions; State and local governments.

Number of Respondents: 300.

Estimated Time Per Response: .5 hours.

Total Annual Burden: 150 hours.

Needs and Uses: This rule requires applicants proposing to locate near certain radio receiving sites to notify those parties. Requirement protects critical national security and research sites from interference.

Federal Communications Commission.

William F. Caton,

Acting Secretary.

[FR Doc. 96–18484 Filed 7–19–96; 8:45 am]

BILLING CODE 6712–01–P

Public Information Collection Requirement Submitted to OMB for Emergency Review and Approval

AGENCY: Federal Communications Commission.

ACTION: Public Information Collection Requirement submitted to OMB for emergency review and approval.

SUMMARY: The Federal Communications Commission, as part of its continuing effort to reduce paperwork burden invites the general public and other Federal agencies to take this opportunity to comment on the following information collections, as required by the Paperwork Reduction Act of 1995, Public Law 104–13. An agency may not conduct or sponsor a collection of information unless it displays a currently valid control number. No person shall be subject to penalty for failing to comply with a collection of information subject to the Paperwork Reduction Act (PRA) that does not display a valid control number. Comments are requested concerning (a) whether the proposed collection is necessary for the proper performance of the functions of the Commission, including whether the information shall have practical utility; (b) the accuracy of the Commission's burden estimates; (c) ways to enhance the quality, utility, and clarity of the information collected; and (d) ways to minimize the burden of the collection of information on the respondents, including the use of automated information techniques or other forms of information technology.

DATES: Written comments should be submitted on or before August 6, 1996. If you anticipate that you will be submitting comments, but find it difficult to do so within the period of time allowed by this notice, you should advise the contact listed below as soon as possible.

ADDRESSES: Direct all comments to Dorothy Conway, Federal Communications Commission, Room 234, 1919 M St., NW., Washington, DC 20554 or via internet to dconway@fcc.gov and Timothy Fain, OMB Desk Officer, Room 10236 NEOB, 725 17th Street, NW., Washington, DC 20503, (202) 395–3561 or via internet at fain__t@al.eop.gov.

FOR FURTHER INFORMATION CONTACT: For additional information or copies of the information collections contact Dorothy Conway at 202–418–0217 or via internet to dconway@fcc.gov.

SUPPLEMENTARY INFORMATION: On January 19, 1996, the Commission adopted a Report and Order revising its rules and policies regarding satellite space and earth station licensing. Amendment of the Commission's Regulatory Policies Governing Domestic Fixed Stellite and Separate International Satellite Systems, IB Docket No. 95–41, 61 FR 9946 (March 12, 1996). Due to an administrative oversight the revised information collections contained in this order were not submitted to OMB with the Commission's request for approval of the collection.

The revisions to this information collection will permit all U.S.-licensed satellite operators to provide both domestic and international service via U.S.-licensed facilities. The revisions adopted in the Report and Order removes all reference to ''domestic'' in Section 25.140 of the rules, 47 CFR 25.140.

A one-step financial showing policy was adopted which broadly applies the existing policy to all applicants for space station facilities. Exceptions to the one-step showing may be granted upon appropriate request by applicants seeking authority to operate in an uncongested portion of the orbital arc. Applicants with pending applications for separate systems authorizations will be afforded time to bring their applications into conformance with the one-step financial showing policy or to request authority for processing under the existing two-step policy.

The Commission is requesting OMB approval of this voluntary collection by August 1, 1996 to permit expeditious processing of the pending applications.

OMB Approval Number: 3060–0343.

Title: Section 25.140—Qualifications of Satellite Space Station Licensees.

Form No.: N/A.

Type of Review: Revision to existing collection.

Respondents: Not-for-profit institutions; Business or other for-profit; Small businesses and organizations.

Number of Respondents: 25.

Estimated time per response: 10 hours.

Total Annual Burden: 2500 hours.

Estimated Cost per Respondent: Based on the assumption that applicants will hire outside counsel at an approximate cost of $150 per hour, it is estimated that the cost per submission will be $150,000.00.

Needs and Uses: The collections of information contained in Part 25 are used by Commission staff in carrying out its duties as set forth in Section 308 and 309 of the Communications Act of 1934, as amended, 47 U.S.C. Section 308 and 309, to determine the technical, legal and other qualifications of an applicant to operate a satellite space station. The one-step financial showings, including amendments to pending applications filed under this policy, will be used by the Commission to determine whether applicants are qualified to construct, launch and operate satellite space station facilities in order to provide timely service to the public. The information collected is used to determine whether the public interest, convenience and necessity will be served, in accordance with Section 309 of the Communications Act of 1934, as amended, 47 USC 309.

Federal Communications Commission.

William F. Caton,

Acting Secretary.

[FR Doc. 96–18486 Filed 7–19–96; 8:45 am]

BILLING CODE 6712–01–P

Public Information Collection Requirement Submitted to OMB for Emergency Review and Approval

AGENCY: Federal Communications Commission.

ACTION: Public Information Collection Requirement Submitted to OMB for Emergency Review and Approval.

SUMMARY: The Federal Communications Commission, as part of its continuing effort to reduce paperwork burden invites the general public and other Federal agencies to take this opportunity to comment on the following information collections, as required by the Paperwork Reduction Act of 1995, Public Law 104–13. An agency may not conduct or sponsor a collection of information unless it displays a currently valid control number. No person shall be subject to penalty for failing to comply with a collection of information subject to the Paperwork Reduction Act (PRA) that does not diplay a valid control number. Comments are requested concerning (a) whether the proposed collection is necessary for the proper performance of the functions of the Commission, including whether the information shall have practical utility; (b) the accuracy of the Commission's burden estimates; (c) ways to enhance the quality, utility, and clarity of the information collected; and (d) ways to minimize the burden of the collection of information on the respondents, including the use of automated information techniques or other forms of information technology.

DATES: Written comments should be submitted on or before August 6, 1996. If you anticipate that you will be submitting comments, but find it difficult to do so within the period of time allowed by this notice, you should advise the contact listed below as soon as possible.

ADDRESSES: Direct all comments to Dorothy Conway, Federal Communications Commission, Room 234, 1919 M St., NW., Washington, DC 20554 or via internet to dconway@fcc.gov and Timothy Fain, OMB Desk Officer, Room 10236 NEOB, 725 17th Street, NW., Washington, DC 20503, (202) 395–3561 or via internet at fain—t@al.eop.gov.

FOR FURTHER INFORMATION CONTACT: For additional information or copies of the information collections contact Dorothy Conway at 202–418–0217 or via internet to dconway@fcc.gov.

SUPPLEMENTARY INFORMATION: On January 19, 1996, the Commission adopted a Report and Order revising its rules and policies regarding satellite space and earth station licensing. Amendment of the Commission's Regulatory Policies Governing Domestic Fixed Stellite and Separate International Satellite Systems, IB Docket No. 95–41, 61 FR 9946 (March 12, 1996). Due to an administrative oversight the revised information collections contained in this order were not submitted to OMB with the Commission's request for approval of the collection.

The revisions to this information collection will permit all U.S.-licensed satellite operators to provide both domestic and international service via U.S.-licensed facilities without submitting modification applications. In addition, applicants may designate whether their services will be offered on a common carrier or non-common carrier basis in the initial application for service. Should their service requirements change, a letter indicating a change in status will be submitted, rather than an application to modify the license.

An increase in the Intelsat Article XIV(d) consultation submissions may occur as applicants and licensees entering the international service market

will be required to consult their operations with Intelsat under Article XIV(d).

The Commission is requesting OMB approval of this voluntary collection by August 1, 1996 to permit expeditious processing of the pending applications and to signficantly reduce the need for applicants to modify their authorizations to provide both domestic and international service.

OMB Approval Number: 3060–0383.

Title: Part 25—Satellite Communications.

Form No.: N/A.

Type of Review: Revision to existing collection.

Respondents: not-for-profit institutions; Business or other for-profit; Small businesses and organizations.

Number of Respondents: 2500.

Estimated time per response: 1.5 hours.

Total Annual Burden: 3,750 hours.

Estimated cost per respondent: Based on the assumption that applicants will hire outside counsel at an approximate cost of $150 per hour, it is estimated that the cost per submission will be $450.00.

Needs and Uses: The collections of information contained in Part 25 are used by Commission staff in carrying out its duties as set forth in Section 308 and 309 of the Communications Act of 1934, as amended, 47 U.S.C. Section 308 and 309, to determine the technical, legal and other qualifications of an applicant to operate a station. Article XIV(d) consultations will be used by the Commission to verify that licensees are fully coordinated with other users in the band. The information collected is used to determine whether the public interest, convenience and necessity will be served, in accordance with Section 309 of the Communications Act of 1934, as amended, 47 USC 309.

Federal Communications Commission.

William F. Caton,

Acting Secretary.

[FR Doc. 96–18487 Filed 7–19–96; 8:45 am]

BILLING CODE 6712–01–P

Notice of Public Information Collections Being Reviewed by the Federal Communications Commission

July 16, 1996.

SUMMARY: The Federal Communications Commission, as part of its continuing effort to reduce paperwork burden invites the general public and other Federal agencies to take this opportunity to comment on the following information collection, as required by the Paperwork Reduction Act of 1995, Public Law 104–13. An agency may not conduct or sponsor a collection of information unless it displays a currently valid control number. No person shall be subject to any penalty for failing to comply with a collection of information subject to the Paperwork Reduction Act (PRA) that does not display a valid control number. Comments are requested concerning (a) Whether the proposed collection of information is necessary for the proper performance of the functions of the Commission, including whether the information shall have practical utility; (b) the accuracy of the Commission's burden estimate; (c) ways to enhance the quality, utility, and clarify of the information collected; and (d) ways to minimize the burden of the collection of information on the respondents, including the use of automated collection techniques or other forms of information technology.

DATES: Persons wishing to comment on this information collection should submit comments September 20, 1996.

ADDRESSES: Direct all comments to Dorothy Conway, Federal Communications Commission, Room 234, 1919 M St., NW., Washington, DC 20554 or via internet to dconway@fcc.gov.

FOR FURTHER INFORMATION CONTACT: For additional information or copies of the information collections contact Dorothy Conway at 202–418–0217 or via internet at dconway@fcc.gov.

SUPPLEMENTARY INFORMATION:

OMB Approval No.: None.

Title: Telephone Number Portability, First Report and Order and Further Notice of Proposed Rulemaking.

Form No.: N/A.

Type of Review: New Collection.

Respondents: Businesses or other for-profit, including small businesses.

Number of Respondents: 105.

Estimated Time Per Response: 7 hours per response (avg.).

Total Annual Burden: 735 hours.

Needs and Uses: In the First Report and Order in CC Docket No. 95–116, the Commission promulgates rules and regulations implementing the statutory requirement that local exchange carriers (LECs) provide number portability. The Commission mandates its provision in the 100 largest metropolitan areas by December 31, 1998, in accordance with a phased implementation schedule and, after that date, within 6 months of a specific request by another carrier. Number portability is to be provided using a regional system of databases, although states are granted the option to develop their own databases. The Further Notice seeks comment on long-term cost recovery issues.

OMB Approval No.: None.

Title: Toll Free Service Access Codes—800/888 Number Release Procedures.

Form No.: N/A.

Type of Review: New Collection.

Respondents: Businesses or other for profit, including small businesses.

Number of Respondents: 2010.

Estimated Time Per Response: 1 hour per response.

Total Annual Burden: 2010 total annual hours.

Needs and Uses: The Commission has instructed Database Service Management, Inc. (DSMI) to collect authorizations from the current 800 number subscriber and its Responsible Organization or the Toll Free Service Provider declining their previously asserted commercial interest in the 888 number. DSMI will not release the 888 number from the pool of unavailable numbers into the general pool of toll free numbers until it receives these authorizations.

OMB Approval No.: None.

Title: Bell Operating Company Provision of Out-of-Region, Interstate, Interexchange Services, Report and Order, CC Docket No. 96–21, (Affiliated Company Recordkeeping Requirement).

Form No.: N/A.

Type of Review: New Collection.

Respondents: Businesses or other for-profit.

Number of Respondents: 7.

Estimated Time Per Response: 6,056 hours per recordkeeper.

Total Annual Burden: 42,394 total annual hours.

Needs and Uses: In the Report and Order issued in CC Docket 96–21, the Commission removed dominant regulation for BOCs that provide out-of-region, interstate, interexchange services through an affiliate that complies with certain safeguards, in order to facilitate the efficient and rapid provision of out-of-region, domestic, interstate, interexchange services by the BOCs, as contemplated by the 1996 Act, while still protecting ratepayers and competition in the interexchange market. These safeguards require, among other things, that the affiliate maintain separate books of account from the LEC.

OMB Approval Number: 3060–0107.

Title: Private Radio Application for Renewal, Reinstatement and/or Notification of Change to License Information.

Form No.: FCC 405A.

Type of Review: Revision of a currently approved collection.

Respondents: Businesses or other for-profit; Small businesses or organizations; Individuals or households; State or Local Governments; Non-profit institutions.

Number of Respondents: 2,700.

Estimated Time Per Response: .33 hour.

Total Annual Burden: 891 hours.

Needs and Uses: FCC Rules require that radio station licensees renew their PRMS (Private Mobile Radio Service) radio station authorization every five years or their CMRS (Commercial Mobile Radio Service) radio station authorization every ten years. Data is used to update the existing database and make efficient use of the frequency spectrum. Data is also used by Compliance personnel in conjunction with Field Engineers for enforcement and interference resolutions.

The data collected is required by the Communications Act of 1934, as amended; International Treaties and FCC Rules 47 CFR Parts 1.926, 90.119, 90.135, 90.157, 95.89, 95.103 and 95.107. The Commission intends to revise the FCC Form 405A to include the drug statement certification as part of the certification text in lieu of checking a ''yes''/''no'' block; amend purpose of application for Land Mobile notification of conditional cancellation for conversion to Private Carrier to have the applicant indicate the Private Carrier name in lieu of listing call signs for cancellation; add a block for applicant to provide an Internet address; and to require the submission of applicant's social security number (for individuals) or TIN Number (for businesses and for-profit organizations). The latter is a result of the Debt Collection Act of 1996. These changes are not expected to significantly change the applicant burden.

OMB Approval Number: 3060–0461.

Title: Section 90.173 Policies governing the assignment of frequencies

Form No.: N/A.

Type of Review: Extension of an existing collection.

Respondents: Individuals or households; Business or other for-profit; State or local governments.

Number of Respondents: 200.

Estimated Time Per Response: 4.5 hours.

Total Annual Burden: 9,000.

Needs and Uses: This rule allows individuals who provide the Commission with information that a current licensee is violating certain rules to be granted a license preference for any channels recovered as a result of that information. Information will be used to determine if licensee is in violation of certain rules.

Federal Communications Commission.

William F. Caton,

Acting Secretary.

[FR Doc. 96–18488 Filed 7–19–96; 8:45 am]

BILLING CODE 6712–01–P

Public Information Collection Approved by Office of Management and Budget

July 16, 1996.

The Federal Communications Commission (FCC) has received Office of Management and Budget (OMB) approval for the following public information collection pursuant to the Paperwork Reduction Act of 1995, Pub. L. 96–511. An agency may not conduct or sponsor a collection of information unless it displays a currently valid control number. Not withstanding any other provisions of law, no person shall be subject to any penalty for failing to comply with a collection of information subject to the Paperwork Reduction Act (PRA) that does not display a valid control number. Questions concerning the OMB control numbers and expiration dates should be directed to Dorothy Conway, Federal Communications Commission, (202) 418–0217.

Federal Communications Commission

OMB Control No.: 3060–0702.

Expiration Date: 5/31/99.

Title: Amendment to Part 20 and 24 of the Commission's Rules, Broadband PCS Competitive Bidding and the Commerical Radio Service Spectrum Cap.

Form No.: N/A.

Estimated Annual Burden: 77,817 annual hour; average 13 hours es per respondent; 6,000 respondents.

Description: The auction rules require broadband PCS applicants for the D, E, and F blocks to submit (1) ownership information, (2) terms of joint bidding agreements, (3) net asset (F Block only) and gross revenues calculations, and (4) evidence of environmental impact. Furthermore in case a licensee defaults or loses its license, the Commission retains the discretion to re-auction such license. If re-auctioned the new license winner will be required at the close of the re-auction to comply with these requirements. The information will be used by the Commission to determine whether the applicant is legally, technically, and financially qualified to bid in the broadband PCS auction and hold a broadband PCS license.

OMB Control No.: 3060–0392.

Expiration Date: 5/31/99.

Title: Pole Attachment Complaint Procedures (Sections 1.1401–1.1415).

Form No.: N/A.

Estimated Annual Burden: 44 total annual hours; average .25 - 3 hour per respondent; 14 respondents.

Description: Congress mandated pursuant to 47 U.S.C. Section 224 that the FCC ensures that the rates, terms and conditions under which cable television operators attach their hardware to utility poles are just and reasonable. Section 224 also mandates establishment of an appropriate mechanism to hear and resolve complaints concerning the rates, terms and conditions for pole attachments. Sections 1.1401-1.1415 contained in Subpart J of Part 1 were promulgated to implement Section 224. See 47 CFR Sections 1.1401-1.1415. The information is submitted primarily by cable television operators in regards to complaints concerning the rates, terms and conditions for pole attachments. The information will be used to either determine the merits of the complaint including calculating the maximum rate under the Commission's formula. The respondents affected are cable television operators and utility companies.

OMB Control No.: 3060–0686.

Expiration Date: 6/30/99.

Title: Streamlining the International Section 214 Authorization Process and Tariff Requirements.

Form No.: N/A.

Estimated Annual Burden: 7,469 total annual hours; 1.4 - 30 average hours per respondent; 560 respondents.

Description: This collection consolidates two existing collections and is necessary to determine the qualifications of applicants to provide common carrier international telecommunications service, including applicants that are affiliated with foreign carriers and to determine whether and under what conditions the authorizations are in the public interest, convenience and necessity.

OMB Control No.: 3060–0387.

Expiration Date: 5/31/99.

Title: On-Site Verification of Field Distribution Sensors Section 15.201(d).

Form: N/A.

Estimated Annual Burden: 3,600 total annual hours; average 18 hour per respondent; 200 respondents.

Description: To monitor non-licensed field disturbance sensors operating in the low VHF television bands, equipment testing is required at each installation. Data is retained by the holder of the equipment authorization issued by the Commission, and made available only upon Commission request.

OMB Control No.: 3060–0546.

Expiration Date: 6/30/99.

Title: Section 76.59 modification of television market.

Form: N/A.

Estimated Annual Burden: 1.575 total annual hours; average 1 - 20 hours per respondent; 150 respondents.

Description: Section 76.59 provides the procedures for a cable operator or television station to file a written request to modify a television station's must-carry market. The data are used by Commission staff to determine whether a television station's market should be modified.

OMB Control No.: 3060–0554.

Expiration Date: 6/30/99.

Title: Section 87.199 Special requirements for 406.025 MHz ELTs.

Form: N/A.

Estimated Annual Burden: 42 total annual hours; average 1 hour per respondent; 42 respondents.

Description: This requirement is necessary to assure that owners of 406.025 MHz Emergency Locator Transmitters register necessary safety information with the National Oceanic and Atmospheric Administration.

OMB Control No.: 3060–0388.

Expiration Date: 6/30/99.

Title: Section 80.227 Special requirements for protection from RF radiation.

Form: N/A.

Estimated Annual Burden: 260 total annual hours; average 10 hours per respondent; 35 respondents. This reflects the Commissions estimates that 25% of the respondents will hire a contractor to prepare their response.

Description: This rule is necessary to assure that manufactures provide information to users regarding the prevention of human exposure to RF radiation in excess of the safety guidelines.

OMB Control No.: 3060–0574.

Expiration Date: 6/30/99.

Title: Annual Employment Report.

Form: FCC 395–M.

Estimated Annual Burden: 232 total annual hours; average .25 - 2.4 hours per respondent; 155 responses.

Description: The FCC 395–M is a data collection device used to assess a cable entity's equal employment opportunity policies and practices in accordance with public and federal objectives. Section 22(e) of the Cable Television Consumer Protection Act of 1992 amends the definition of ''cable operator'' for EEO purposes to include program packages of multiple video program distributors (MVPD) using owned or leased multichannel, multipoint distribution service (MMDS), direct broadcast satelite (DBS), television receive only (TVRO) and video dialtone facilities to provide multiple channels of video programming. The MVPD Annual Employment Report is used to enforce the Commission EEO requirements.

OMB Control No.: 3060–0095.

Expiration Date: 6/30/99.

Title: Annual Employment Report - Cable Television.

Form: FCC 395–A.

Estimated Annual Burden: 4,683 total annual hours; average .25 - 2.4 hours per respondent; 2,158 respondents.

Description: The FCC 395–M is a data collection device used to assess a cable entity's equal employment opportunity policies and practices in accordance with public and federal objectives.

OMB Control No.: 3060–0707.

Expiration Date: 6/30/99.

Title: Restriction on Over-the-Air Reception Devices: Television Broadcast and Multichannel Multipoint Distribution Service, Notice of Proposed Rulemaking.

Form: N/A.

Estimated Annual Burden: 1,290 total annual hours; average 1–10 hours per respondent; 300 respondents.

Description: Pursuant to the Telecommunications Act of 1996, the Commission proposes rules prohibiting restrictions on viewers' ability to recieve over-the-air signals, by presumptively preempting state and local regulations that could impair viewers' ability to receive such signals. State and local governments may demonstrate the reasonabileness of their regulations by filing requests for declartory rulings or petitions for waivers with the Commission. These filings constitute the information collection foreseen by the Commission.

OMB Control No.: 3060–0685.

Expiration Date: 7/31/99.

Title: Annual Updating of Maximum Permitted Rates for Regulated Cable Services.

Form: 1240.

Estimated Annual Burden: 88,549 total annual hours; average 1–15 hours per respondent; 8,475 respondents.

Description: The FCC Form 1240 is used by cable operators to file for adjustiments to maximum permitted rates for regulated services to reflect external costs. The FCC Form 1240 implements a new optional rate methodology where cable operators will be permitted to make annual, as opposed to quarterly rate changes. It it an alternative to the FCC Form 1210.

OMB Control No.: 3060–0728.

Expiration Date: 9/30/96.

Title: Supplemental Information Requesting Taxpayer Identifying Number for Debt Collection.

Form: N/A.

Estimated Annual Burden: 177,986 total annual hours; average .017 hour per respondent; 10,469,716 respondents.

Description: Public Law 104–134, Omnibus Consolidated Recissions and Appropriations Act of 1996 Chapter 10 requires each Federal agency to obtain for each person doing business with it their taxpayer identification number. In the case of an individual the number is the person's Social Security Number; in the case of a business it is the Employer Idenfication Number as assigned by the Internal Revenue Service, U.S. Department of Treasury. This information will by the U.S. Treasury for purposes of collecting and reporting on any delinquent amounts arising out of such person's relationship with the Government.

OMB Control No.: 3060–0691.

Expiration Date: 6/30/99.

Title: Amendments of Parts 2 and 90 of the Commission's Rules to Provide for the Use of 200 Channels outside the Designated Filing Areas in the 896–901 MHz Bands Alloted to the Pecialized Mobile Radio Service.

Form: N/A.

Estimated Annual Burden: 1,139 total annual hours; average .5 - 4 hours per respondent; 1,020 respondents.

Description: The information will be used to determine if applicants are legally, technically and financially qualified to be licensees.

OMB Control No.: 3060–0544.

Expiration Date: 6/30/99.

Title: Commerical Leased Access Channels—Section 76.701

Form: N/A.

Estimated Annual Burden: 14,780 total annual hours; average .13 - 4 hours per respondent; 536,000 respondents.

Description: Section 10(a) of the Cable Television Consumer Protection and Competition Act of 1992, Pub. Law 102–385, permits cable operators to enforce voluntarily a written and published policy of prohibiting indecent programming on commercial leased access channels on their cable systems. Section 10(b) of the Act requires the Commission to adopt regulations that are designed to restrict access of children to indecent programming on leased access channels. The requirements in section 76.701 protect cable operators against involuntarily transmitting indecent programming on leased access channels; and unknowingly transmitting indecent programming on leased access channels to children or adult subscribers without adult consent.

OMB Control No.: 3060–0174.

Expiration Date: 8/31/96.

Title: Antenna Registeration Number Required as Supplement to Application Forms.

Form: N/A.

Estimated Annual Burden: 43,344 total annual hours; average 5 minutes per respondent; 516,000 respondents.

Description: Effective July 1, 1996, the current antenna clearance proceudres are replaced with a uniform registration procedure that applies to antenna structure owners. Structure owners will receive an Antenna Registration Number which is a unique number that identifies an antenna structure. Once obtained, this number must be used on all filings related to the antenna structure.

OMB Control No.: 3060–0568.

Expiration Date: 7/31/99.

Title: Section 76.970 Commercial Leased Access Terms and Conditions.

Form: N/A.

Estimated Annual Burden: 87,780 total annual hours; average 14 hours per respondent; 6,270 respondents.

Description: The information collected is used by the prospective leased access programmers and the Commission to verify rate calculations for leased access channels. The Commission's leased access requirements were designed to promote diversity of programming sources and competition in programming delivery as required by Section 612 of the Communications Act, and serve to eliminate uncertainty in negotiations for leased commercial access.

OMB Control No.: 3060–0584.

Expiration Date: 07/31/99.

Title: Adminstration of U.S. Certified Accounting Authorities in Maritime Mobile and Maritime Mobile-Satellite Radio Services.

Form: N/A.

Estimated Annual Burden: 150 total annual hours; average 1.5 hours per respondent; 100 respondents.

Description: The FCC has adopted standards for accounting authorities in the maritime mobile and maritime mobile-satilite radio services. Information will be used to determine eligibility of applicants for certification as an accounting authority, create internal studies and ensure compliance and to identify accounting authorities to the International Telecommunications Union. Respondents will be individuals/entities seeking certification or those already certified to be accounting authorities.

OMB Control No.: 3060–0325.

Expiration Date: 6/30/99.

Title: Section 80.605 U.S. Coast Guard Coordination.

Form: N/A.

Estimated Annual Burden: 52 total annual hours; average 1 hour per respondent; 52 respondents.

Description: Rule is needed to insure that applications for non-selectable transponders and shore based radio navigation aids are coordinated with the U.S. Coast Guard for a determination that such stations do note pose a hazard to navigation.

OMB Control No.: 3060–0556.

Expiration Date: 6/30/99.

Title: Section 80.1061 Special requirement for 406.025 MHz EPIRBs.

Form: N/A.

Estimated Annual Burden: 798 total annual hours; average 1 hour per respondent; 798 respondents.

Description: Rule is needed to assure that owners of 406.025 MHz Emergency Postiion Indicating Radio Beacons register necessary safety information with the National Oceanic and Atomospheric Administration.

OMB Control No.: 3060–0703.

Expiration Date: 6/30/99.

Title: Aggregation of Equipment Costs by Cable Operators—CS Docket No. 96–57.

Form: FCC form 1205.

Estimated Annual Burden: 151,900 total annual hours; average hours 14 per respondent; 10,800 respondents.

Description: This rulemaking implements certain Cable TV rate regulation changes called for in the Telecommunications Act of 1996.

Federal Communications Commission.

William F. Caton,

Acting Secretary.

[FR Doc. 96–18485 Filed 7–19–96; 8:45 am]

BILLING CODE 6712–01–F

FEDERAL RESERVE SYSTEM

Formations of, Acquisitions by, and Mergers of Bank Holding Companies

The company listed in this notice has applied to the Board for approval, pursuant to the Bank Holding Company Act of 1956 (12 U.S.C. 1841 *et seq.*) (BHC Act), Regulation Y (12 CFR Part 225), and all other applicable statutes and regulations to become a bank holding company and/or to acquire the assets or the ownership of, control of, or the power to vote shares of a bank or bank holding company and all of the banks and nonbanking companies owned by the bank holding company, including the companies listed below.

The application listed below, as well as other related filings required by the Board, are available for immediate inspection at the Federal Reserve Bank indicated. Once the application has been accepted for processing, it will also be available for inspection at the offices of the Board of Governors. Interested persons may express their views in writing on the standards enumerated in the BHC Act (12 U.S.C. 1842(c)). If the proposal also involves the acquisition of a nonbanking company, the review also includes whether the acquisition of the nonbanking company complies with the standards in section 4 of the BHC Act, including whether the acquisition of the nonbanking company can ''reasonably be expected to produce benefits to the public, such as greater convenience, increased competition, or gains in efficiency, that outweigh possible adverse effects, such as undue concentration of resources, decreased or unfair competition, conflicts of interests, or unsound banking practices'' (12 U.S.C. 1843). Any request for a hearing must be accompanied by a statement of the reasons a written presentation would not suffice in lieu of a hearing, identifying specifically any questions of fact that are in dispute, summarizing the evidence that would be presented at a hearing, and indicating how the party commenting would be aggrieved by approval of the proposal. Unless otherwise noted, nonbanking activities will be conducted throughout the United States.

Unless otherwise noted, comments regarding the application must be received at the Reserve Bank indicated or the offices of the Board of Governors not later than August 25, 1996.

A. Federal Reserve Bank of Richmond (Lloyd W. Bostian, Jr., Senior Vice President) 701 East Byrd Street, Richmond, Virginia 23261:

1. MainStreet BankGroup Incorporated, Martinsville, Virginia; to acquire 100 percent of the voting shares of Hanover Bank, Mechanicsville, Virginia.

Board of Governors of the Federal Reserve System, July 16, 1996.

Jennifer J. Johnson,

Deputy Secretary of the Board.

[FR Doc. 96–18448 Filed 7–19–96; 8:45 am]

BILLING CODE 6210–01–M

DEPARTMENT OF HEALTH AND HUMAN SERVICES

Office of the Secretary; Agency Information Collection Activities: Proposed Collections; Comment Request

The Department of Health and Human Services, Office of the Secretary will periodically publish summaries of proposed information collections

projects and solicit public comments in compliance with the requirements of Section 3506(c)(2)(A) of the Paperwork Reduction Act of 1995. To request more information on the project or to obtain a copy of the information collection plans and instruments, call the OS Reports Clearance Officer on (202) 690–6207.

Comments are invited on: (a) Whether the proposed collection of information is necessary for the proper performance of the functions of the agency, including whether the information shall have practical utility; (b) the accuracy of the agency's estimate of the burden of the proposed collection of information; (c) ways to enhance the quality, utility and clarity of the information to be collected; and (d) ways to minimize the burden of the collection of information on respondents, including through the use of automated collection techniques or other forms of information technology.

1. *HHS Acquisition Regulations—HHSAR Part 352 Solicitation Provisions and Contract Clauses—0990–0130*—Extension—The Key Personnel clause in HHSAR 352.27–5 requires contractors to obtain approval before substituting key personnel which are specified in the contract. *Respondents:* State or local governments, Businesses or other for-profit, non-profit institutions, Small businesses; *Total Number of Respondents:* 1802; *Frequency of Response:* one time; *Average Burden per Response:* 2 hours; *Estimated Annual Burden:* 3604 hours.

2. *HHS Acquisition Regulations HHSAR Part 370 Special Programs Affecting Acquisition—0990–0129*——Extention—HHSAR Part 370 establishes requirements for the accessibility of meetings, conferences, and seminars to persons with disabilities; establishes requirements for Indian Preference in employment, training and subcontracting opportunities. *Respondents:* State or local governments, Businesses or other for-profit, non-profit institutions, Small businesses; *Burden Information about Accessibility of Meetings—Annual Number of Respondents:* 340; Annual; *Frequency of Response:* one time; *Average Burden per Response:* 8 hours; *Total Annual Burden:* 2,720 hours—*Burden Information about Indian Preference—Annual Number of Respondents:* 1048; *Annual Frequency of Response:* one time; *Average Burden per Response:* 8 hours; *Total Annual Burden:* 8,384 hours—*Total Burden:* 11,104 hours.

3. *Application for Waiver of the two-year Foreign Residence Requirement of the Exchange Visitor Program—0990–0001*—Extension—The application is used by institutions (colleges, hospitals, etc.) to request a favorable recommendation to the USIA for waiver of the two-year Foreign Residence Requirement of the Exchange Visitor Program on behalf of foreign visitors working in areas of interest to HHS.*Respondents:* Individuals, State or local governments, Businesses or other for-profit, non-profit institutions; *Total Number of Respondents:* 200; *Frequency of Response:* one time; *Average Burden per Response:* 6 hours; *Estimated Annual Burden:* 1200 hours.

4. *Recordkeeping Requirements for Government Owned/Contractor Held Property and Report of Accounting Personal Property (HHS–565)—0990–0015*— Extension—The recordkeeping requirements are needed to assure accountability and control for government owned/contractor held property for HHS contracts. Form 565 is used to report all accountable personal property purchased or fabricated by contractors and billed to HHS. *Respondents:* State or local governments, Business or other for-profit, non-profit institutions, small business; *Burden Information for Form HHS–565: Annual Number of Respondents:* 3,600; *Annual Frequency of Response:* one time; *Average Burden per Response:* 30 minutes; *Total Annual Burden:* 1,800 hours. *Burden Information for Recordkeeping Requirements: Annual Number of Responses:* 4,500; *Average Burden per Response:* 30 minutes; *Total Annual Burden:* 2,250 hours. *Total Burden:* 4,050 hours.

Send comments to Cynthia Agens Bauer, OS Reports Clearance Officer, Room 503H, Humphrey Building, 200 Independence Avenue S.W., Washington, DC, 20201. Written comments should be received within 60 days of this notice.

Dated: July 15, 1996.

Dennis P. Williams,

Deputy Assistant Secretary, Budget.

[FR Doc. 96–18526 Filed 7–19–96; 8:45 am]

BILLING CODE 4150–04–M

Office of the Secretary

Statement of Organization, Functions and Delegation of Authority; Assistant Secretary for Management and Budget

Part A, of the Office of the Secretary of the Statement of Organization, Functions and Delegation of Authority for the Department of Health and Human Services, Office of Management and Budget is being amended as follows: Chapter, AMM, ''Office of Information Resources Management (OIRM), as last amended at 57 FR 37817 (August 20, 1992) is revised to reflect realignment of functions. The changes are as follows:

1. Delete in its entirety Chapter AMM and replace with the following:

AMM.00 Mission. The Office of Information Resources Management advises the Secretary and the Assistant Secretary for Management and Budget/Chief Information Officer (CIO) on matters pertaining to the use of information and related technologies to accomplish Departmental goals and program objectives. The mission of the office is to use technology-supported business process reengineering, investment analysis, performance measurement, and strategic application of information systems and policies to provide improved management of information resources and technology, and better, more efficient service to our clients and employees.

The Office is responsible for: the overall quality of information resources management throughout the Department; representing the Department to central management agencies (e.g., the Office of Management and Budget), supporting the development of a robust information infrastructure (including information technology-based services for the Office of the Secretary); and advocating rigorous methods for analyzing, selecting, developing, operating, and maintaining information systems.

The Office collaborates with the operating and staff divisions of the Department to resolve policy and management issues, manage risk associated with major information systems, evaluate and approve investments in technology, and share best practices.

The Office exercises authorities delegated by the Secretary to the Assistant Secretary for Management and Budget, as the CIO for the Department. These authorities derive from the Information Technology Management Reform Act of 1996, the Paperwork Reduction Act of 1995, the Computer Matching and Privacy Act of 1988, the Computer Security Act of 1987, the National Archives and Records Administration Act of 1984, the Competition in Contracting Act of 1984, the Federal Records Act of 1950, OMB Circular A–130: Management of Federal Information Resources, and Government Printing and Binding Regulations issued by the Joint Committee on Printing.

B. Section AMM.10 Organization. The Office of Information Resources Management, under the supervision of the Deputy Assistant Secretary for

Information Resources Management/ Deputy CIO, who reports to the Assistant Secretary for Management and Budget/CIO, consists of the following components.

Immediate Office (AMMA)
Office of Information Technology Planning and Investment (AMMJ)
Office of Telecommunications and Information Management (AMMK)
Office of Network Management (AMML)
Office of Systems Engineering (AMMM)

C. Section AMM.20 Functions. The Office of Information Resources Management is responsible for the following:

1. The Immediate Office of Information Resources Management is responsible for:

a. Providing advice and counsel to the Secretary and the Assistant Secretary for Management and Budget/Chief Information Officer under the direction of the Deputy Assistant Secretary for Information Resources Management serving as the Department's Deputy CIO.

b. Providing executive direction to align Departmental strategic planning for information resources and technology with the Department's strategic business planning.

c. Promoting business process reengineering, investment analysis, and performance measurement throughout the Department, to capitalize on evolving information technology, treating it as an investment rather than as an expense.

d. Representing the Department in Federal government-wide initiatives to develop policy and implement an information infrastructure.

e. Chairing the Departmental Investment Review Board and the Departmental Information Resources Management Advisory Council by the Deputy Assistant Secretary for Information Resources Management/ Deputy CIO, and chairing the Office of the Secretary Information Resources Management Policy and Planning Board by the Deputy Office Director.

f. Managing funds, personnel, information, property, and projects of the Office of Information Resources management.

2. The Office of Information Technology Planning and Investment (OITPI) is responsible for:

a. Working with operating division Chief Information Officers to jointly identify opportunities for participation and consultation in Planning information technology projects with major effects on OPDIV program performance. OITPI provides leadership primarily in the planning, design, and evaluation of major projects.

b. Assessing risks that major information systems pose to successful performance of program operations and efficient conduct of administrative business throughout the Department, and using program outcome measures to gauge the quality of Departmental information resources management.

c. Coordinating the Department's strategic planning and budgeting processes for information technology, providing direct planning support to assure that IRM plans support agency business planning and mission accomplishment.

d. Coordinating the activities of the Departmental Investment Review Board, which is charged with the evaluation and selection of major information systems initiatives for both initial and continued funding.

e. Developing policies and guidance on information resources and technology management as required by law or regulation, or in consultation with program managers on issues of Department scope.

f. Coordinating and supporting the Departmental Information Resources Management Advisory Council, whose membership consists of the Chief Information Officers from each operating division.

g. Establishing guidance and training requirements for managers of information systems designated as sensitive under the Department's automated information systems security program.

h. Providing leadership for special priority initiatives of Department-wide scope (e.g., data center consolidation).

i. Representing the Department through participation on interagency and Departmental work groups and task forces.

3. The Office of Telecommunications and Information Management (OTIM) is responsible for the following:

a. Working with operating division Chief Information Officers to jointly identify opportunities for participation and consultation in administering information management functions and telecommunications initiatives with major effects on OPDIV performance. OTIM provides leadership primarily in defining alternatives for acquisition of telecommunications services and coordinating implementation of information management initiatives (e.g., Government Information Locator Service).

b. Managing the Department's telecommunications program, including the development of Departmental telecommunications policies and support of Governmentwide telecommunications management projects and processes (e.g., the Interagency Management Council (IMC) and FTS2000 and successor contracts.

c. Managing the Department's information collection program, including development of Departmental policies, coordinating the development of the Department's information collection budget, reviewing and certifying requests to collect information from the public.

d. Approving and reporting on computer matching activities as required by law through the Departmental Data Integrity Board.

e. Managing the Departmental printing management, records management, and mail management policy programs.

f. Providing support for special priority initiatives (e.g., the Government Information Locator System).

g. Representing the Department or participating on both interagency and integral groups and task forces.

4. The Office of Systems Engineering (OSE) is responsible for:

a. Leading Departmental efforts to expand availability of electronic means for conducting business among all components of the Department, all agencies of the Federal government, and all parties involved in accomplishing Departmental program objectives (including State Governments, contractors, grantees, other service providers, and the general public).

b. Supporting implementation of general purpose, standards-based, distributed computing environments consisting of data communication networks, data base management systems, and information processing platforms, to promote market competition and reengineering of applications systems for cost-effectiveness, scalability, and flexibility.

c. Providing access for all employees within the Office of the Secretary to services and related tools, for systems engineering, applications development, and systems maintenance, to exploit the distributed computing environment and to share resources and best practices.

d. Managing pilot projects and initial production implementations of key enabling technologies, as these become commercially available and cost beneficial (e.g., standards-based electronic messaging and directory services).

e. Supporting effective use of available means to achieve electronic messaging, database access, file transfer, and transaction processing through Internet and commercial information services.

f. Promoting and coordinating implementation of data standards for

information integration across application systems and for software reuse.

g. Assisting managers of applications systems to increase the value and quality of their services and to control risks associated with systems integration, technological obsolescence, and software development, and migration to standards-based technologies, especially for systems automating common administrative and management services.

h. Establishing and operating an information technology support service for the Office of the Assistant Secretary for Management and Budget for managing standard hardware and software configurations, providing hardware repair services, and software support.

i. Maintaining a collection of technical reference documents, including policies, standards, trade press, market research, and advisory service publications.

j. Managing contracts for IRM-related equipment and support services.

k. Representing the Department through participation on interagency and Departmental work groups and task forces.

5. The Office of Network Management (ONM) is responsible for:

a. Operating, maintaining, and enhancing the Office of the Secretary computer network consisting of interconnected local area networks with wide area network access to Departmental data centers, external organizations, Internet resources and commercial information services for the Office of the Secretary and organizations participating through interagency agreement (e.g., Administration for Children and Families, the Office of Inspector General, and the Administration on Aging).

b. Establishing and monitoring network policies and procedures, and developing plans and budgets for network support services.

c. Identifying, implementing, and maintaining standard office automation applications running on the Office of the Secretary network, such as electronic mail, scheduling, and bulletin board services.

d. Working with other HHS operating and staff divisions to implement electronic links between the Office of the Secretary computer network and other networks in conjunction with changing user needs and technological advancements.

e. Ensuring reliable, high-performance network services, including implementation of automated tools and procedures for network management, utilizing network performance measures, enhancing network security, providing priority response services for network-related problems, and providing remote access to the network for field use and for telecommunicating.

f. Implementing and operating electronic tools to enhance Secretarial communications with all HHS personnel.

g. Coordinating with the Program Support Center or other external providers, the delivery of voice, voice messaging, and video conferencing services for the Office of the Secretary, including system design and implementation, and cost sharing.

h. Coordinating the OS strategic planning and budgeting processes for information technology, providing direct planning support to assure that IRM plans support agency business planning and mission accomplishment.

i. Developing policies and guidance on information resources management within the Office of the Secretary for acquisition and use of information technology, development of architectural standards for interoperability, and coordination of implementation procedures.

j. Maintaining and operating the inventory of automated data processing equipment for the Office of the Secretary.

k. Managing contracts for IRM-related equipment and support services.

l. Coordinating and supporting the Office of the Secretary Information Resources Management Policy and Planning Board, an advisory body whose membership consists of the staff division Chief Information Officers.

m. Representing the Department through participation on interagency and Departmental work groups and task forces.

Dated: June 21, 1996.

John J. Callahan,

Assistant Secretary for Management and Budget.

[FR Doc. 96–18527 Filed 7–19–96; 8:45 am]

BILLING CODE 4150–04–M

Centers for Disease Control and Prevention

Disease, Disability, and Injury Prevention and Control Special Emphasis Panel (SEP): Development of Feasibility Testing of Interventions To Increase Health-Seeking Behaviors in, and Health Care for Populations at High Risk for Gonorrhea, Program Announcement 638: Meeting

In accordance with section 10(a)(2) of the Federal Advisory Committee Act (Pub. L. 92–463), the Centers for Disease Control and Prevention (CDC) announces the following committee meeting.

Name: Disease, Disability, and Injury Prevention and Control SEP: Development of Feasibility Testing of Interventions to Increase Health-Seeking Behaviors in, and Health Care for Populations at High Risk for Gonorrhea, Program Announcement 638.

Time and Date: 8:30 a.m.–5 p.m., August 28–29, 1996.

Place: 12 Corporate Square, Building 12, Conference Rooms 3106 and 3110, Corporate Square Boulevard, Atlanta, Georgia 30329.

Status: Closed.

Matters To Be Discussed: The meeting will include the review, discussion, and evaluation of applications received in response to Program Announcement 638.

The meeting will be closed to the public in accordance with provisions set froth in 5 U.S.C. Section 552b(c) (4) and (6), and the Determination of the Associate Director for Management and Operations, CDC, pursuant to Public Law 92–463.

Contact Person for More Information: John R. Lehnherr, Chief, Prevention Support Office, National Center for HIV, STD, and TB Prevention, CDC, 1600 Clifton Road, NE, M/S E07, Atlanta, Georgia 30333, telephone 404/639–8025.

Dated: July 16, 1996.

Carolyn J. Russell,

Director, Management Analysis and Services Office, Centers for Disease Control and Prevention (CDC).

[FR Doc. 96–18472 Filed 7–19–96; 8:45 am]

BILLING CODE 4163–18–M

Administration for Children and Families

Proposed Information Collection Activity; Comment Request

Proposed Projects

Title: Low Income Home Energy Assistance Program (LIHEAP) Leveraging Report Form.

OMB No.: 0970–0121.

Description: The report is an annual activity which LIHEAP grantees must submit if they wish to receive a share of leveraging incentive funds that are set aside for this purpose out of annual appropriations. The report provides us with data that allows us to determine whether grantees are carrying out leveraging activities that meet statutory and regulatory requirements for countability. The leveraging incentive and regulatory requirements for countability. The leveraging incentive funds are awarded based on the amount to countable activities carried out by each grantee, under a formula prescribed by regulation.

Respondents: States, tribes/tribal organizations, and territories.

ANNUAL BURDEN ESTIMATES

Instrument	Number of respondents	Number of responses per respondent	Average burden hours per response	Total burden hours
LIHEAP Leveraging Rept	70	1	38	2,660

Estimated Total Annual Burden Hours: 2,660.

In compliance with the requirements of Section 3506(c)(2)(A) of the Paperwork Reduction Act of 1995, the Administration for Children and Families is soliciting public comment on the specific aspects of the information collection described above. Copies of the proposed collection of information can be obtained and comments may be forwarded by writing to the Administration for Children and Families, Office of Information Services, Division of Information Resource Management Services, 370 L'Enfant Promenade, S.W., Washington, D.C. 20447, Attn: ACF Reports Clearance Officer. All requests should be identified by the title of the information collection.

The Department specifically requests comments on: (a) Whether the proposed collection of information is necessary for the proper performance of the functions of the agency, including whether the information shall have practical utility; (b) the accuracy of the agency's estimate of the burden of the proposed collection of information; (c) ways to enhance the quality, utility, and clarity of the information to be collected; and (d) ways to minimize the burden of the collection of information on respondents, including through the use of automated collection techniques or other forms of information technology. Consideration will be given to comments and suggestions submitted within 60 days of this publication.

Dated: July 16, 1996.

Bob Sargis,

Acting Reports Clearance Officer.

[FR Doc. 96–18521 Filed 7–19–96; 8:45 am]

BILLING CODE 4184–01–M

Proposed Information Collection Activity; Comment Request

Proposed Projects

Title: Application Requirements for the Low Income Home Energy Assistance Program (LIHEAP) and Detailed Model Plan (submitted every 3 years. Abbreviated applications to be submitted in intervening years.)

OMB No.: 0970–0075.

Description: This information requirement is an annual activity which is required by law for the receipt of federal block grant funds under the LIHEAP statute. By law, we must make this model plan available to grantees. It provides grantees an optional management tool that may alleviate the burden of preparing additional information to complete plans. The detailed mode plan is to be filed only once every three years or sooner if major changes are made to a grantee's program. We are also seeking approval for a streamlined application to be used in alternate years.

Respondents: State, Local or Tribal Govt.

ANNUAL BURDEN ESTIMATES

Instrument	Number of respondents	Number of responses per respondent	Average burden hours per response	Total burden hours
Detailed Model Plan	65	1	1	65
Abb. Model Plan	115	1	.33	38
Estimated Total Annual Burden Hours: 103.				

In compliance with the requirements of Section 3506(c)(2)(A) of the Paperwork Reduction Act of 1995, the Administration for Children and Families is soliciting public comment on the specific aspects of the information collection described above. Copies of the proposed collection of information can be obtained and comments may be forwarded by writing to the Administration for Children and Families, Office of Information Services, Division of Information Resource Management Services, 370 L'Enfant Promenade, SW., Washington, DC 20447, Attn: ACF Reports Clearance Officer. All requests should be identified by the title of the information collection.

The Department specifically requests comments on: (a) Whether the proposed collection of information is necessary for the proper performance of the functions of the agency, including whether the information shall have practical utility; (b) the accuracy of the agency's estimate of the burden of the proposed collection of information; (c) ways to enhance the quality, utility, and clarity of the information to be collected; and (d) ways to minimize the burden of the collection of information on respondents, including through the use of automated collection techniques or other forms of information technology. Consideration will be given to comments and suggestions submitted within 60 days of this publication.

Dated: July 16, 1996.

Bob Sargis,

Acting Reports Clearance Officer.

[FR Doc. 96–18522 Filed 7–19–96; 8:45 am]

BILLING CODE 4184–01–M

Food and Drug Administration

[Docket No. 96F–0248]

Life Technologies, Inc.; Filing of Food Additive Petition

AGENCY: Food and Drug Administration, HHS.

ACTION: Notice.

SUMMARY: The Food and Drug Administration (FDA) is announcing that Life Technologies, Inc., has filed a

petition proposing that the food additive regulations be amended to provide for a change in the limitations for sulphopropyl cellulose ion-exchange resin for the recovery and purification of proteins for food use.

DATES: Written comments on the petitioner's environmental assessment by August 21, 1996.

ADDRESSES: Submit written comments to the Dockets Management Branch (HFA–305), Food and Drug Administration, 12420 Parklawn Dr., rm. 1–23, Rockville, MD 20857.

FOR FURTHER INFORMATION CONTACT: Andrew D. Laumbach, Center for Food Safety and Applied Nutrition (HFS–217), Food and Drug Administration, 200 C St. SW., Washington, DC 20204, 202–418–3071.

SUPPLEMENTARY INFORMATION: Under the Federal Food, Drug, and Cosmetic Act (sec. 409(b)(5) (21 U.S.C. 348(b)(5))), notice is given that a food additive petition (FAP 6A4502) has been filed by Life Technologies, Inc., 8400 Helgerman Ct., Gaithersburg, MD 20874. The petition proposes to amend the food additive regulations in § 173.25(b)(5) *Ion-exchange resins* (21 CFR 173.25(b)(5)) to provide for a change in the temperature and pH limitations for sulphopropyl cellulose ion-exchange resin for the recovery and purification of proteins for food use.

The potential environmental impact of this action is being reviewed. To encourage public participation consistent with regulations promulgated under the National Environmental Policy Act (40 CFR 1501.4(b)), the agency is placing the environmental assessment submitted with the petition that is the subject of this notice on public display at the Dockets Management Branch (address above) for public review and comment. Interested persons may, on or before August 21, 1996, submit to the Dockets Management Branch (address above) written comments. Two copies of any comments are to be submitted, except that individuals may submit one copy. Comments are to be identified with the docket number found in brackets in the heading of this document. Received comments may be seen in the office above between 9 a.m. and 4 p.m., Monday through Friday. FDA will also place on public display any amendments to, or comments on, the petitioner's environmental assessment without further announcement in the Federal Register. If, based on its review, the agency finds that an environmental impact statement is not required and this petition results in a regulation, the notice of availability of the agency's finding of no significant impact and the evidence supporting that finding will be published with the regulation in the Federal Register in accordance with 21 CFR 25.40(c).

Dated: July 10, 1996.

George H. Pauli,

Acting Director, Office of Premarket Approval, Center for Food Safety and Applied Nutrition.

[FR Doc. 96–18439 Filed 7–19–96; 8:45 am]

BILLING CODE 4160–01–F

Health Resources and Services Administration

Notification of Expiring Project Periods for Community and Migrant Health Centers

AGENCY: Health Resources and Services Administration, HHS.

ACTION: Notice.

SUMMARY: The Health Resources and Services Administration (HRSA) announces that a total of 216 Community Health Center and Migrant Health Center (C/MHC) grantees will reach the end of their project periods during fiscal year (FY) 1997. Assuming the availability of sufficient appropriated funds in FY 1997, it is the intent of HRSA to continue to support health services in these areas, given the unmet need inherent in their designation as medically underserved. HRSA will open competition for awards under sections 329 and 330 of the Public Health Service (PHS) Act (42 U.S.C. 254c and 254b, respectively) to support health services in the areas currently served by these grants.

This notice provides interested parties the opportunity to gather information and decide whether to pursue Federal funding as a community or migrant health center. During this process, communication with Regional Office staff is essential (see Appendix I). A subsequent notice will be published in the Federal Register to announce the availability of funds for FY 1997 and provide detailed information on the grant application process and review criteria. The Regional Office staff noted above will serve as the primary contact points once the grant application process begins.

DATES: Current grant expiration dates vary by area throughout FY 1997. Applications for competing continuation grants are normally due 120 days prior to the expiration of the current grant award.

SUPPLEMENTARY INFORMATION: The C/MHC programs are carried out under the authority of sections 329 and 330 of the Public Health Service Act. The program regulations are codified in Title 42 of the Code of Federal Regulations (CFR), Parts 51c and 56. The C/MHC programs are designed to promote the development and operation of community-based primary health care service systems in medically underserved areas for medically underserved populations.

The list of service areas for which a current section 329/330 grant project period expires in FY 1997 is set forth in Appendix II. The service areas are listed by city and county. Detailed information about each service area, such as census tracts, can be obtained by contacting the appropriate PHS regional office (see Appendix I).

A project period is the total amount of time for which a section 329/330 grant has been programmatically approved. For the purposes of this notice, grant awards will be made for a one year budget period and project periods will be for up to five years.

Dated: July 16, 1996.

Ciro V. Sumaya,

Administrator.

Appendix I—Regional Office Staff

Region I: Rob Lawrence, Acting Director, Division of Health Services Delivery, DHHS—Region I, Rm. 1826, JFK Federal Building #1401, Boston, MA 02203

Region II: Ron Moss, Director, Division of Health Services Delivery, DHHS—Region II, Rm. 3337, 26 Federal Plaza, New York, NY 10278

Region III: Bruce Riegel, Director, Division of Health Services Delivery, DHHS—Region III, Rm. 10200, MS 14, 3535 Market Street, Philadelphia, PA 19104

Region IV: Robert Jackson, Division of Health Services Delivery, DHHS—Region IV, 101 Marietta Tower, Atlanta, GA 30323

Region V: Deborah Willis, Division of Health Services Delivery, DHHS—Region V, 105 West Adams Street, 17th Floor, Chicago, IL 60603

Region VI: Frank Cantu, Director, Division of Health Services Delivery, DHHS—Region VI, Rm. 1800, 1200 Main Tower Bldg, Dallas, TX 75202

Region VII: Ray Maddox, Director, Division of Health Services Delivery, DHHS—Region VII, Federal Office Building, 601 East 12th Street, Kansas City, MO 64106

Region VIII: Barbara Bailey, Director, Division of Health Services Delivery, DHHS—Region VIII, Federal Office Building, 1961 Stout Street, Denver, CO 80294

Region IX: Gordon Soares, Director, Division of Health Services Delivery, DHHS—Region IX, 50 United Nations Plaza, San Francisco, CA 94102

Region X: Doug Woods, Director, Division of Health Services Delivery, DHHS—Region X, Blanchard Plaza, 2201 Sixth Avenue, Seattle, WA 98121

GRANTEES COMPETING IN FISCAL YEAR 1997 BY REGION AND STATE; 216 GRANTEES TOTAL DUPLICATE COUNTY SITES WITHIN GRANTEES ARE NOT LISTED

	Number of grantees	Grant end date
Region 01		
Connecticut	1	
City: Hartford		01/31/97.
County: Hartford		
Massachusetts	5	
City: Brockton		06/30/97.
County: Plymouth		
City: East Boston		06/30/97.
County: Suffolk		
City: Roxbury		12/31/96.
County: Suffolk		
City: Allston		01/31/97.
County: Suffolk		
City: Roxbury		01/31/97.
County: Suffolk		
Maine	2	
City: Eastport		03/31/97.
County: Washington		
City: Bethel		01/31/97.
County: Oxford		
New Hampshire	1	
City: Manchester		06/30/97.
County: Hillsborough		
Rhode Island	1	
City: Pawtucket		12/31/96.
County: Providence		
Region 02		
New Jersey	1	
City: Camden		12/31/96.
County: Camden		
New York	11	
City: Sodus		12/31/96.
County: Wayne		
City: Rushville		12/31/96.
County: Yates		
City: Bronx		12/31/96.
County: Bronx		
City: New York		01/31/97.
County: New York		
City: Mt Vernon		12/31/96.
County: Westchester		
City: White Plains		05/31/97.
County: Westchester		
City: Bronx		01/31/97.
County: Bronx		
City: Brooklyn		03/31/97.
County: Kings		
City: Queens, Arverne		03/31/97.
County: Queens		
City: Brooklyn		06/30/97.
County: Kings		
City: Buffalo		03/31/97.
County: Erie		
City: Brooklyn		12/31/96.
County: Kings		
Puerto Rico	7	
City: Loiza		05/31/97.
County: Loiza		
City: Santurce		03/31/97.
County: San Juan		
City: Camuy		01/31/97.

GRANTEES COMPETING IN FISCAL YEAR 1997 BY REGION AND STATE; 216 GRANTEES TOTAL DUPLICATE COUNTY SITES WITHIN GRANTEES ARE NOT LISTED—Continued

	Number of grantees	Grant end date
County: Camuy		
City: San Sebastian		01/31/97.
County: San Sebastian		
City: Mayaguez		01/31/97.
County: Mayaguez		
City: Guanica		01/31/97.
County: Guanica		
City: Hatillo		01/31/97.
County: Hatillo		
City: Gurabo		06/30/97.
County: Gurabo		
City: Morovis		01/31/97.
County: Morovis		
Virgin Islands	1	
City: St. Croix		05/31/97.
County: St. Croix		
Region 03		
District of Columbia	2	
City: Washington		01/31/97.
County: District of Columbia		
City: Washington		11/30/96.
County: District of Columbia		
Delaware	3	
City: Dover		03/31/97.
County: Kent		
City: Nassawadox		03/31/97.
County: Northampton		
City: Wilmington		01/31/97.
County: Newcastle		
City: Wilmington		06/30/96.
County: Newcastle		
Maryland	4	
City: Brandywine		06/30/96.
County: Prince Georges		
City: Baltimore		11/30/96.
County: Baltimore City		
City: Denton		12/31/96.
County: Caroline		
City: Waldorf		03/31/97.
County: Charles		
City: Federalsburg		03/31/97.
County: Caroline		
City: Somerset		03/31/97.
County: Princess Anne		
Pennsylvania	11	
City: New Holland		03/31/97.
County: Lancaster		
City: Pittsburgh		01/31/97.
County: Allegheny		
City: Monessen		01/31/97.
County: Westmoreland		
City: Sharon		01/31/97.
County: Mercer		
City: New Milford		03/31/97.
County: Susquehanna		
City: Lakewood		03/31/97.
County: Wayne		
City: Mansfield		05/31/97.
County: Tioga		
City: Philadelphia		11/30/96.
County: Philadelphia		
City: Hyndman		01/31/97.
County: Bedford		
City: Chambersburg		11/30/96.
County: Franklin		
City: Philadelphia		05/31/97.
County: Philadelphia		
City: Philadelphia		05/31/97.

GRANTEES COMPETING IN FISCAL YEAR 1997 BY REGION AND STATE; 216 GRANTEES TOTAL DUPLICATE COUNTY SITES WITHIN GRANTEES ARE NOT LISTED—Continued

	Number of grantees	Grant end date
County: Philadelphia		
City: Chester		01/31/97.
County: Delaware		
City: Erie		05/31/97.
County: Erie		
Virginia	7	
City: St Charles		05/31/97.
County: Lee		
City: Castlewood		05/30/97.
County: Russell		
City: Vansant		05/30/97.
County: Buchanan		
City: Haysi		05/31/97.
County: Dickenson		
City: Axton		01/31/97.
County: Henry		
City: Richmond		06/30/97.
County: Henrico		
City: Suffolk		06/30/97.
County: Southampton		
City: Ivor		03/31/97.
County: Southampton		
City: Boydton		12/31/96.
County: Mecklenburg		
City: Victoria		12/31/96.
County: Lunenburg		
West Virginia:	5	
City: Grafton		05/31/97.
County: Taylor		
City: Eglon		5/31/97.
County: Preston		
City: Matoaka		5/31/97.
County: Mercer		
City: Williamsburg		5/31/97.
County: Greenbrier		
City: Rainelle		11/30/96.
County: Greenbrier		
City: Meadow Bridge		11/30/96.
County: Fayette		
City: Camden-on-Gauley		11/30/96.
County: Webster		
Region 04		
Alabama	6	
City: Birmingham		01/31/97.
County: Jefferson		
City: Montgomery		01/31/97.
County: Montgomery		
City: Tuscaloosa		11/30/96.
County: Tuscaloosa		
City: Gadsden		03/31/97.
County: Etowah		
City: Prichard		11/30/96.
County: Mobile		
City: Huntsville		11/30/96.
County: Madison		
Florida	14	
City: Tallahassee		06/30/96.
County: Leon		
City: Sumterville		03/31/97.
County: Sumter		
City: Indiantown		03/31/97.
County: Martin		
City: Clewiston		03/31/97.
County: Hendry		
City: Okeechobee		03/31/97.
County: Okeechobee		
City: Ft. Pierce		03/31/97.
County: St. Lucie		
City: West Palm Beach		03/31/97.

GRANTEES COMPETING IN FISCAL YEAR 1997 BY REGION AND STATE; 216 GRANTEES TOTAL DUPLICATE COUNTY SITES WITHIN GRANTEES ARE NOT LISTED—Continued

	Number of grantees	Grant end date
County: Palm Beach		
City: Cross City		03/31/97.
County: Dixie		
City: Moyo		03/31/97.
County: Lafayette		
City: Wewatchika		03/31/97.
County: Gulf		
City: Quincy		03/31/97.
County: Gadsden		
City: Panacea		03/31/97.
County: Wakulla		
City: Madison		03/31/97.
County: Madison		
City: Carabelle		03/31/97.
County: Franklin		
City: Bristol		03/31/97.
County: Liberty		
City: Tampa		03/31/97.
County: Hillsborough		
City: Fellsmere		12/31/96.
County: Indian River		
City: Miami		12/31/96.
County: Dade		
City: Winter Garden		01/31/97.
County: Orange		
City: Groveland		01/31/97.
County: Lake		
City: Hollywood		12/31/96.
County: Broward		
City: Belle Glade		12/31/96.
County: Palm Beach		
City: Miami Beach		12/31/96.
County: Dade		
City: Jacksonville		06/30/97.
County: Duval		
City: Lake City		05/31/97.
County: Columbia		
City: Clearwater		05/31/97.
County: Pinellas		
Georgia	8	
City: Bowman		03/31/97.
County: Elbert		
City: Colbert		03/31/97.
County: Madison		
City: Colbert		03/31/97.
County: Oglethorpe		
City: Atlanta		05/31/97.
County: Fulton		
City: Savannah		11/30/96.
County: Chatham		
City: Morganton		11/30/96.
County: Union		
City: Trenton		01/31/97.
County: Dade		
City: Wrightsville		06/30/97.
County: Johnson		
City: Decatur		12/31/96.
County: Dekalb		
City: Cumming		05/31/97.
County: Forsyth		
Kentucky	3	
City: Cornettsville		03/31/97.
County: Perry		
City: Booneville		03/31/97.
County: Owsley		
City: Whitesburg		03/31/97.
County: Letcher		
City: Jackson		03/31/97.
County: Breathitt		
City: Buckhorn		03/31/97.

GRANTEES COMPETING IN FISCAL YEAR 1997 BY REGION AND STATE; 216 GRANTEES TOTAL DUPLICATE COUNTY SITES WITHIN GRANTEES ARE NOT LISTED—Continued

	Number of grantees	Grant end date
County: Perry		
City: Salyersville		01/31/97.
County: Magoffin		
City: Grethel		01/31/97.
County: Floyd		
City: Vanceburg		11/30/96.
County: Lewis		
Mississippi	10	
City: Belzoni		05/31/97.
County: Humphreys		
City: Yazoo City		05/31/97.
County: Yazoo		
City: Canton		05/31/97.
County: Madison		
City: Mound Bayou		11/30/96.
County: Bolivar		
City: Greenville		11/30/96.
County: Washington		
City: Shuqualak		03/31/97.
County: Noxubee		
City: Meridian		03/31/97.
County: Lauderdale		
City: Dekalb		03/31/97.
County: Kemper		
City: Vancleave		12/31/96.
County: Jackson		
City: Hancock		12/31/96.
County: Hancock		
City: Saucier		12/31/96.
County: Harrison		
City: Walnut Grove		03/31/97.
County: Leake		
City: Sebastopol		03/31/97.
County: Scott		
City: Philadelphia		03/31/97.
County: Neshoba		
City: Sumrall		01/31/97.
County: Lamar		
City: New Augusta		01/31/97.
County: Perry		
City: Seminary		01/31/97.
County: Covington		
City: Hattiesburg		01/31/97.
County: Forrest		
City: Tunica		05/31/97.
County: Tunica		
City: Clarksdale		05/31/97.
County: Coahoma		
City: Marks		05/31/97.
County: Quitman		
City: Houlka		01/31/97.
County: Chickasaw		
City: Tremont		01/31/97.
County: Itawamba		
City: Smithville		01/31/97.
County: Monroe		
City: Tylertown		11/30/96.
County: Walthall		
City: Port Gibson		05/31/97.
County: Claiborne		
North Carolina	9	
City: Aurora		11/30/96.
County: Beaufort		
City: Yanceyville		05/31/97.
County: Caswell		
City: Moncure		11/30/96.
County: Chatham		
City: Prospect Hill		11/30/96.
County: Caswell		
City: Chapel Hill		11/30/96.

GRANTEES COMPETING IN FISCAL YEAR 1997 BY REGION AND STATE; 216 GRANTEES TOTAL DUPLICATE COUNTY SITES WITHIN GRANTEES ARE NOT LISTED—Continued

	Number of grantees	Grant end date
County: Orange		
City: Burlington		11/30/96.
County: Alamance		
City: Snow Hill		11/30/96.
County: Greene		
City: Warrenton		11/30/96.
County: Warren		
City: Raleigh		03/31/97.
County: Wake		
City: Spring Lake		11/30/96.
County: Harnett		
City: Wilmington		06/30/97.
County: New Hanover		
City: Pembroke		11/30/96.
County: Robeson		
South Carolina	7	
City: Cowpens		03/31/97.
County: Spartanburg		
City: Columbia		03/31/97.
County: Richland		
City: Cross		03/31/97.
County: Berkeley		
City: Charleston		03/31/97.
County: Charleston		
City: Rock Hill		03/31/97.
County: York		
City: Fairfax		03/31/97.
County: Allendale		
City: Ehrhardt		03/31/97.
County: Bamberg		
City: Winnsboro		01/31/97.
County: Fairfield		
City: Walterboro		05/31/97.
County: Charleston		
City: Walterboro		05/31/97.
County: Colleton		
City: McClellanville		03/31/97.
County: Charleston		
Tennessee	10	
City: Wartburg		12/31/96.
County: Morgan		
City: Linden		03/31/97.
County: Perry		
City: Huntsville		05/31/97.
County: Morgan		
City: Huntsville		05/31/97.
County: Scott		
City: Woodbury		03/31/97.
County: Cannon		
City: Celina		03/31/97.
County: Clay		
City: Crossville		03/31/97.
County: Cumberland		
City: Smithville		03/31/97.
County: Dekalb		
City: Jamestown		03/31/97.
County: Fentress		
City: Lafayette		03/31/97.
County: Macon		
City: Livingston		03/31/97.
County: Overton		
City: Byrdstown		03/31/97.
County: Pickett		
City: Cookeville		03/31/97.
County: Putnam		
City: Carthage		03/31/97.
County: Smith		
City: Spencer		03/31/97.
County: Van Buren		
City: McMinnville		03/31/97.

GRANTEES COMPETING IN FISCAL YEAR 1997 BY REGION AND STATE; 216 GRANTEES TOTAL DUPLICATE COUNTY SITES WITHIN GRANTEES ARE NOT LISTED—Continued

	Number of grantees	Grant end date
County: Warren		
City: Sparta		03/31/97.
County: White		
City: Cookeville		03/31/97.
County: Putnam		
City: Gainesboro		03/31/97.
County: Jackson		
City: Jellico		01/31/97.
County: Campbell		
City: Frakes		01/31/97.
County: Bell		
City: Jellico		01/31/97.
County: Claiborne		
City: Williamsburg		01/31/97.
County: Whitley		
City: Nashville		01/31/97.
County: Davidson		
City: Hartsville		01/31/97.
County: Trousdale		
City: Bolivar		06/30/97.
County: Hardeman		
City: Savannah		12/31/96.
County: Hardin		
City: Newport		03/31/97.
County: Cocke		
City: Dover		03/31/97.
County: Steward		
Region 05		
Illinois	5	
City: Aurora		01/31/97.
County: Kane		
City: Chicago Heights		01/31/97.
County: Cook		
City: Hoopeston		01/31/97.
County: Vermilion		
City: McHenry		01/31/97.
County: McHenry		
City: Urbandale		01/31/97.
County: Alexander		
City: Princeville		01/31/97.
County: Peoria		
City: Chicago		05/31/97.
County: Cook		
City: Flora		03/31/97.
County: Clay		
City: Sesser		03/31/97.
County: Franklin		
City: Chicago		01/31/97.
County: Cook		
City: Chicago		05/31/97.
County: Cook		
Michigan	5	
City: Benton Harbor		03/31/97.
County: Berrien		
City: Holland		03/31/97.
County: Ottawa		
City: Bangor		03/31/97.
County: Van Buren		
City: Spalding		01/31/97.
County: Menominee		
City: Ewen		01/31/97.
County: Ontonagon		
City: Detroit		12/31/96.
County: Wayne		
City: Pullman		03/31/97.
County: Allegan		
City: South Haven		03/31/97.
County: Van Buren		
City: Battle Creek		06/30/97.

GRANTEES COMPETING IN FISCAL YEAR 1997 BY REGION AND STATE; 216 GRANTEES TOTAL DUPLICATE COUNTY SITES WITHIN GRANTEES ARE NOT LISTED—Continued

	Number of grantees	Grant end date
County: Calhoun		
Minnesota	2	
City: Minneapolis		03/31/97.
County: Hennepin		
City: St. Paul		01/31/97.
County: Ramsey		
Ohio	2	
City: Toledo		11/30/96.
County: Lucas		
City: Akron		11/30/96.
County: Summit		
Wisconsin	4	
City: Milwaukee		01/31/97.
County: Milwaukee		
City: Milwaukee		12/31/96.
County: Milwaukee		
City: Minong		05/31/97.
County: Washburn		
City: Hayward		05/31/97.
County: Sawyer		
City: Minong		05/31/97.
County: Burnett		
City: Cashton		06/30/97.
County: Monroe		
Region 06		
Arkansas	2	
City: Madison		11/30/00.
County: Lee		
City: Wabash		11/30/00.
County: Phillips		
City: Lepanto		11/30/96.
County: Poinsett		
City: West Memphis		11/30/96.
County: Crittenden		
Louisiana	5	
City: Franklin		05/31/97.
County: St. Mary		
City: Shreveport		06/30/97.
County: Caddo		
City: Baton Rouge		01/31/97.
County: East Baton Rouge		
City: New Iberia		05/31/97.
County: Iberia		
City: New Orleans		11/30/96.
County: Orleans		
New Mexico	2	
City: Los Lunas		12/31/96.
County: Bernalillo		
City: Albuquerque		12/31/96.
County: Valencia		
City: Tierra Amarilla		01/31/97.
County: Rio Arriba		
Oklahoma	1	
City: Tulsa		07/31/96.
County: Tulsa		
Texas	11	
City: Newton		03/31/97.
County: Newton		
City: Crystal City		03/31/97.
County: Zavala		
City: Gonzales		11/30/96
County: Gonzales		
City: Harlingen		03/31/97.
County: Cameron		
City: Raymondville		03/31/97.
County: Willacy		
City: Brownsville		03/31/97.
County: Cameron		
City: Hereford		05/31/97.

GRANTEES COMPETING IN FISCAL YEAR 1997 BY REGION AND STATE; 216 GRANTEES TOTAL DUPLICATE COUNTY SITES WITHIN GRANTEES ARE NOT LISTED—Continued

	Number of grantees	Grant end date
County: Deaf Smith		
City: Plainview		05/31/97.
County: Hale		
City: Crosbyston		05/31/97.
County: Crosby		
City: Friona		05/31/97.
County: Parmer		
City: Dimmitt		05/31/97.
County: Castro		
City: Littlefield		05/31/97.
County: Lamb		
City: Matador		05/31/97.
County: Motley		
City: Muleshoe		05/31/97.
County: Bailey		
City: Silverton		05/31/97.
County: Briscoe		
City: Amarillo		05/31/97.
County: Potter		
City: Rio Grande City		01/31/97.
County: Starr		
City: Zapata		01/31/97.
County: Zapata		
City: Hebronville		01/31/97.
County: Jim Hogg		
City: Brownsville		01/31/97.
County: Cameron		
City: Laredo		03/31/97.
County: Webb		
City: Lubbock		06/30/97.
County: Lubbock		
City: Uvalde		11/30/96.
County: Uvalde		
City: Leakey		11/30/96.
County: Real		
City: San Antonio		01/31/97.
County: Bexar		
Region 07		
Iowa	1	
City: Sioux City		01/31/97.
County: Woodbury		
Kansas	2	
City: Topeka		11/30/96.
County: *Statewide*		
City: Junction City		12/31/96.
County: Geary		
Missouri	5	
City: Kirksville		03/31/97.
County: Adair		
City: Edina		03/31/97.
County: Knox		
City: Memphis		03/31/97.
County: Scotland		
City: Wyaconda		03/31/97.
County: Clark		
City: St Louis		01/31/97.
County: St. Louis City		
City: Cape Girardeau		12/31/96.
County: Bollinger		
City: Braymer		11/30/99.
County: Caldwell		
City: Richland		11/30/99.
County: Pulaski		
Nebraska	3	
City: Lincoln		03/31/97.
County: Lancaster		
City: Omaha		01/31/97.
County: Douglas		
City: Gering		06/30/97.

GRANTEES COMPETING IN FISCAL YEAR 1997 BY REGION AND STATE; 216 GRANTEES TOTAL DUPLICATE COUNTY SITES WITHIN GRANTEES ARE NOT LISTED—Continued

	Number of grantees	Grant end date
County: Scotts Bluff		
Region 08		
Colorado	6	
City: Denver		12/31/96.
County: *Statewide*		
City: Greeley		03/31/97.
County: Weld		
City: Las Animas		12/31/96.
County: Bent		
City: Rocky Ford		12/31/96.
County: Otero		
City: Aurora		12/31/96.
County: Arapahoe		
City: Lakewood		12/31/96.
County: Jefferson		
City: Lamar		12/31/96.
County: Prowers		
City: Boulder		06/30/97.
County: Boulder		
Montana	2	
City: Missoula		06/30/97.
County: Missoula		
City: Great Falls		06/30/97.
County: Cascade		
North Dakota	1	
City: Pembina		12/31/96.
County: Pembina		
South Dakota	4	
City: Faith		01/31/97.
County: Meade		
City: Pierre		05/31/97.
County: Jones		
City: Highmore		05/31/97.
County: Hyde		
City: Alcester		03/31/97.
County: Union		
City: Rapid City		01/31/97.
County: Pennington		
Utah	2	
City: Ogden		03/31/97.
County: Weber		
City: Provo		12/31/96.
County: Utah		
Wyoming	1	
City: Worland		01/31/97.
County: Washakie		
Region 09		
Arizona	2	
City: Somerton		05/31/97.
County: Yuma		
City: Page		05/31/97.
County: Coconino		
California	11	
City: Calexico		05/31/97.
County: Imperial		
City: Blythe		05/31/97.
County: Riverside		
City: East Palo Alto		03/31/97.
County: San Mateo		
City: Modesto		03/31/97.
County: Stanislaus		
City: Merced		03/31/97.
County: Merced		
City: Nipomo		05/31/97.
County: San Luis Obispo		
City: Olivehurst		05/31/97.

GRANTEES COMPETING IN FISCAL YEAR 1997 BY REGION AND STATE; 216 GRANTEES TOTAL DUPLICATE COUNTY SITES WITHIN GRANTEES ARE NOT LISTED—Continued

	Number of grantees	Grant end date
County: Yuba		
City: Oroville		05/31/97.
County: Butte		
City: Colusa		05/31/97.
County: Colusa		
City: Los Angeles		01/31/97.
County: Los Angeles		
City: Watsonville		12/31/96.
County: Santa Cruz		
City: Los Angeles		01/31/97.
County: Los Angeles		
City: Santa Ana		05/31/97.
County: Orange		
City: Fresno		11/30/96.
County: Fresno		
City: Bloomington		12/31/96.
County: San Bernardino		
Hawaii	1	
City: Honolulu		03/31/97.
County: Honolulu		
Region 10		
Idaho	1	
City: Twin Falls		01/31/97.
County: Twin Falls		
City: Burley		01/31/97.
County: Cassia		
City: Jackpot		01/31/97.
County: Elko		
Oregon	2	
City: Oregon City		06/30/97.
County: Clackamas		
City: Tillamook		06/30/97.
County: Tillamook		
Washington	4	
City: Seattle		01/31/97.
County: King		
City: Moses Lake		03/31/97.
County: Grant		
City: Kennewick		05/31/97.
County: Benton		
City: Pasco		05/31/97.
County: Franklin		
City: Seattle		01/31/97.
County: King		

[FR Doc. 96–18440 Filed 7–19–96; 8:45 am]

BILLING CODE 4160–15–P

Health Resources and Services Administration

Availability of Funds for Grants to Provide Health Care for the Homeless and Health Care Services for Homeless Children

AGENCY: Health Resources and Services Administration, HHS.

ACTION: Notice of available funds.

SUMMARY: The Health Resources and Services Administration (HRSA) announces that the President's budget for fiscal year (FY) 1997 includes approximately $65.4 million for discretionary grants to provide primary health and substance abuse services to homeless individuals. These grants will be awarded under Section 340 of the Public Health Service (PHS) Act, 42 U.S.C. 256. This announcement is made prior to an appropriation of FY 1997 funds, to allow applicants sufficient time to prepare applications and to enable timely award of the grants in consideration of the special needs of homeless individuals. Approximately $6.3 million will be used to fund continuation of services where there is an expiring project period.

The PHS is committed to achieving the health promotion and disease prevention objectives of Healthy People 2000, a PHS-led national activity for setting health priorities. This grant program is related to the objectives cited for special populations, particularly people with low income, minorities, and the disabled, which constitute a significant portion of the homeless population. Potential applicants may obtain a copy of Healthy People 2000 (Full Report; Stock No. 017–001–00474–0) or Healthy People 2000 (Summary Report; Stock No. 017–001–00473–1) through the Superintendent of Documents, Government Printing

Office, Washington, D.C. 20402–9325 (telephone 202–783–3238).

The PHS strongly encourages all grant recipients to provide a smoke-free workplace and promote the non-use of all tobacco products. In addition, Public Law 103–227, the Pro-Children Act of 1994, prohibits smoking in certain facilities (or in some cases, any portion of a facility) in which regular or routine education, library, day care, health care or early childhood development services are provided to children.

DUE DATE: Applications are due 120 days prior to project end date, with the first due date being August 1, 1996 and the last date being March 1, 1997. However, to allow potential applicants sufficient time to prepare application materials for those areas in which grants are expiring on October 31, 1996, applications for grants beginning November 1, 1996 will be due 90 days prior to the expiration of the current grant award or no later than August 1, 1996. Applications will be considered to have met the deadline if they are: (1) Received on or before the deadline date; or (2) postmarked on or before the established deadline date and received in time for orderly processing. Applicants should request a legibly dated U.S. Postal Service postmark or obtain a legibly dated receipt from a commercial carrier or U.S. Postal Service. Private metered postmarks are not acceptable as proof of timely mailing. Applications received after the announced closing date will not be considered for funding.

ADDRESSES: Application kits (Form PHS 5161–1) with revised face sheet DHHS Form 424, as approved by the Office of Management and Budget under control number 0937–0189 may be obtained from, and completed applications should be mailed to the appropriate PHS Regional Grants Management Officer (RGMO) (see Appendix A). The RGMO can also provide assistance on business management issues.

FOR FURTHER INFORMATION CONTACT: For general program information and technical assistance, contact Ms. Jean Hochron, Chief, Health Care for the Homeless Branch, Division of Programs for Special Populations, Bureau of Primary Health Care (BPHC), at 4350 East-West Highway, Bethesda, Maryland 20814 (telephone 301–594–4430).

ELIGIBLE APPLICANTS: It is the intent of HRSA to continue to support health services to the homeless populations currently being served given the needs of this medically underserved population. Any nonprofit private organization or public entity may apply to serve the homeless population currently served by a grantee whose project period is expiring. For a list of service areas with expiring project periods, see Federal Register notice published on June 17, 1996, at 61 FR 30622.

SUPPLEMENTARY INFORMATION: It is anticipated that approximately 16 Health Care for the Homeless and 1 Health Care Services for Homeless Children competing grants will be awarded to serve homeless individuals in urban and rural areas. Grants will range from approximately $88,000 to approximately $1.2 million for primary health care and substance abuse services.

A project period is the total amount of time for which a grant has been programmatically approved. For purposes of this notice, grant awards will be made for a one year budget period and up to a five year project period.

Grants Awarded Under Section 340(a)

Section 340(a) of the PHS Act authorizes the Secretary to award grants to enable grantees, directly or through contracts, to provide for the delivery of primary health services to homeless individuals. Eligible applicants are nonprofit private organizations and public entities, including State and local governmental agencies. Grantees and organizations with whom they may contract for services under this program must have an agreement with a State under its Medicaid program, title XIX of the Social Security Act (if they provide services that are covered under the title XIX plan for the State), and be qualified to receive payments under the agreement. This requirement may be waived if the organization does not, in providing health care services, impose a charge or accept reimbursement available from any third-party payor including reimbursement under any insurance policy or under any Federal or State health benefits program.

For grantees not previously funded under section 340(a), the amount of Federal grant funds awarded may not exceed 75 percent of the costs of providing primary health and substance abuse services under the grant. Such newly funded grantees must make available non-Federal contributions to meet the remainder of the costs. Existing 340(a) grantees, if funded, must make available 33⅓ percent non-Federal contributions to meet the remainder of the costs. Non-Federal contributions may be in cash or in-kind, fairly evaluated, including plant, equipment or services. Funds provided by the Federal Government, or services assisted or subsidized to any significant extent by the Federal Government, may not be included in determining the amount of the non-Federal contributions. Such determination may not include any cash or in-kind contributions that, prior to February 26, 1987, were made available by any public or private entity for the purpose of assisting homeless individuals (including assistance other than the provision of health services). The Secretary may waive the matching requirement if the grantee is a nonprofit private entity and the Secretary determines that it is not feasible for the grantee to comply with the requirement.

The grant may be used to continue to provide services listed below for up to 12 months to individuals who have obtained permanent housing if services were provided to these individuals when they were homeless. For the purpose of this program, the term ''homeless individual'' means an individual who lacks housing (without regard to whether the individual is a member of a family), including an individual whose primary residence during the night is a supervised public or private facility that provides temporary living accommodations, or an individual who is a resident in transitional housing.

Project Requirements

a. The following services must be provided, directly or through contract:

1. Primary health care and substance abuse services at locations accessible to homeless individuals;

2. 24-hour emergency primary health and substance abuse services to homeless individuals;

3. Referral of homeless individuals as appropriate to medical facilities for necessary hospital services;

4. Referral of homeless individuals who are mentally ill to entities that provide mental health services, unless the applicant will provide such services directly;

5. Outreach services to inform homeless individuals of the availability of primary health and substance abuse services;

6. Aid to homeless individuals in establishing eligibility for assistance, and in obtaining services, under entitlement programs.

7. Podiatry, dental (including dentures), and vision services are supplemental services and may be provided where medically necessary, to the extent that the level of delivery of the required services is not diminished.

Grants Awarded Under Section 340(s)

Section 340(s) of the PHS Act authorizes the Secretary to carry out demonstration programs to enable

entities, either directly or through contracts, to provide for the delivery of comprehensive primary health services to homeless children and to children at imminent risk of homelessness. Eligible applicants are grantees funded under 340(a) of the PHS Act, other public and nonprofit private entities that provide primary health services and substance abuse services to a substantial number of homeless individuals, and public nonprofit private children's hospitals that provide primary health services to a substantial number of homeless individuals. Grantees and organizations with which they may contract for services under this program must have an agreement with a State under its Medicaid program, title XIX of the Social Security Act (if they provide services that are covered under the title XIX plan for the State), and be qualified to receive payments under the agreement. This requirement may be waived if the organization does not, in providing health care services, impose a charge or accept reimbursement available from any third-party payor, including reimbursement under any insurance policy or under any Federal or State health benefits program.

For grantees under this program which are children's hospitals, the amount of Federal grant funds awarded may not exceed 50 percent of the costs of providing primary health and substance abuse services under the grant. Grantees which are children's hospitals must make available non-Federal contributions to meet the remainder of the costs. Non-Federal contributions may be in cash or in-kind, fairly evaluated, including plant, equipment or services. Funds provided by the Federal Government or services assisted or subsidized to any significant extent by the Federal Government, may not be included in determining the amount of the non-Federal contributions.

Project Requirements

a. The following services must be provided directly or through contract:

1. Comprehensive primary health services, including such services provided through mobile medical units;

2. Referrals for provision of health services, social services, and education services, including referral to hospitals, community and migrant health centers, Head Start and other education programs, and programs for prevention and treatment of child abuse; and

3. Outreach services to identify children who are homeless or at imminent risk of homelessness and to inform parents/guardians of the availability of services directly from the grantees and through the referral mechanism.

Other Grant Requirements Applicable to Both Sections 340(a) and 340(s) Grantees

a. Restrictions on the use of grant funds are as follows:

1. Grant funds may not be used to pay for inpatient services, except for residential treatment for substance abuse provided in settings other than hospitals.

2. Grant funds may not be used to make cash payments to intended recipients of primary health and substance abuse services or mental health services.

3. Grants funds may not be used to purchase or improve real property (other than minor remodeling of existing improvements to real property) or to purchase major medical equipment, including mobile medical units. However, upon request by an applicant demonstrating that the purposes of the project cannot otherwise be carried out, the Secretary may waive this restriction.

b. The grantee must, directly or through contract, provide services without regard to ability to pay for the services. If a charge is imposed for the delivery of services, such charge (1) will be made according to a schedule of charges that is made available to the public; (2) will not be imposed on any homeless individual with an income less than the official poverty level (the nonfarm income official poverty line defined by the Office of Management and Budget); (3) will be adjusted to reflect the income and resources of the homeless individual involved.

Additional Grant Requirements for Section 340(a) Only

a. The grantee may not expend more than 10 percent of grant funds for the purpose of administering the grant.

b. The grantee may, with respect to title I of the Protection and Advocacy for Mentally Ill Individuals Act of 1986, expend amounts received for the purpose of referring homeless individuals who are chronically mentally ill, and who are eligible under the Act, to systems that provide advocacy services under the Act.

c. The grantee may provide services through contracts with nonprofit selfhelp organizations that are established and managed by current and former recipients of mental health or substance abuse services, who have been homeless individuals; and that have an agreement with a State under its Medicaid program, title XIX of the Social Security Act (if they provide services that are covered under the title XIX plan for the State), and qualify to receive payments under the agreement.

Criteria for Evaluating Applications for Section 340(a) and 340(s)

Competing Applications 340(a)

These competitive applications for grant support will be reviewed based upon the following evaluation criteria:

a. Compliance with the requirements of section 340(a) of the PHS Act and other programmatic requirements;

b. Experience in providing primary health or substance abuse services to homeless individuals or medically underserved populations.

c. Extent to which the applicant has identified the homeless population in the service area, including the social and demographic characteristics of the population and the extent to which their health needs are not being met;

d. Adequacy of the applicant's outreach plan to serve the homeless population;

e. Extent to which primary health and substance abuse services are to be provided to homeless individuals in a manner that demonstrates program linkages and services integration;

f. Adequacy of the applicant's referral arrangement to appropriate medical facilities for hospitalization and, for individuals who are mentally ill, to entities that provide mental health services, unless the applicant will provide such services directly;

g. Extent to which the applicant has the ability to involve appropriate community representatives to ensure that the program is culturally appropriate and accommodates the needs of homeless individuals in the service area;

h. Extent to which the applicant has engaged or plans to engage with other entities in an integrated service system in the community;

i. Qualifications and experience of the proposed project staff; i.e., the staff size and skills necessary to carry out an effective program;

j. Adequacy of the proposed budget; i.e., detailed estimates of revenue and costs in accordance with grant application instructions;

k. Evidence of administrative procedures for fiscal control and fund accounting procedures which provide for reasonable financial administration of Federal and non-Federal funds;

l. Evidence of an ongoing program of quality assurance with respect to health services provided under the grant;

m. Evidence of a reasonable plan for communicating with non-English speaking homeless individuals provided health services under the grant;

n. Indication of strategies for collaborative relationships and linkages which maximize effective use of existing health and social service resources, especially those of state and local health department, primary care providers to the underserved, and academic institutions; and

o. A current grantee's progress in achieving stated goals and objectives for the previous year's grant.

Competing Applications 340(s)

These competitive applications for grant support will be reviewed based upon the following evaluation criteria:

a. Compliance with the requirements of section 340(s) of the PHS Act and other programmatic requirements;

b. Experience in providing primary health or substance abuse services to homeless individuals or medically underserved populations;

c. Extent to which the applicant has identified homeless children and children at imminent risk of homelessness within the service area, including the social and demographic characteristics of these children and the extent to which their health needs are not being met;

d. Proposal of an innovative approach to meeting the health care needs of homeless children and children at imminent risk of homelessness, which can be utilized as a demonstration site for other programs nationally;

e. Adequacy of the applicant's outreach plan to identify homeless children and children at imminent risk of homelessness and inform their parents/guardians of the availability of services;

f. Extent to which primary health services are to be provided to homeless children in a linked and integrated manner;

g. Adequacy of the applicant's referral arrangements for the provision of health services, social services, and education services, including referral to hospitals, community and migrant health centers, Head Start and other educational programs, and programs for prevention and treatment of child abuse;

h. Extent to which the applicant has the ability to involve appropriate community representatives to ensure that the program accommodates the needs of homeless children and children at imminent risk of homelessness in the service area;

i. Extent to which the applicant has engaged or plans to engage with other entities in an integrated service system in the community;

j. Qualifications and experience of the proposed project staff; i.e., the staff size and skills necessary to carry out an effective program;

k. Adequacy of the proposed budget; i.e., detailed projections of revenue and costs in accordance with grant application instructions;

l. Evidence of administrative procedures for fiscal control and fund accounting procedures which provide for reasonable financial administration of Federal and non-Federal funds;

m. Evidence of an ongoing program of quality assurance with respect to health services provided under the grant;

n. Evidence of a reasonable plan for communicating with non-English speaking children provided health services under the grant and their parents/guardians; and

o. Indication of strategies for collaborative relationships and linkages which maximize effective use of existing health and social service resources, especially those of state and local health department, primary care providers to the underserved, and academic institutions.

p. A current grantee's progress in achieving stated goals and objectives for the previous year's grant.

Other Award Information

The Health Care for the Homeless program has been determined to be a program which is subject to the provisions of Executive Order 12372 concerning intergovernmental review of Federal programs by appropriate health planning agencies, as implemented by 45 CFR Part 100. Executive Order 12372 allows States the option of setting up a system for reviewing applications from within their States for assistance under certain Federal programs. The application packages to be made available under this notice will contain a listing of States which have chosen to set up a review system and will provide a State point of contact (SPOC) in the State for the review. Applicants (other than federally-recognized Indian tribal governments) should contact their SPOC as early as possible to alert them to the prospective applications and receive any necessary instructions on the State process. For proposed projects serving more than one State, the applicant is advised to contact the SPOC of each affected State. The due date for State process recommendations is 60 days after the appropriate deadline dates. The BPHC does not guarantee that it will accommodate or explain its responses to State process recommendations received after the date. (See ''Intergovernmental Review of Federal Programs'', Executive Order 12372, and 45 CFR part 100 for a description of the review process and requirements.)

Public Health System Reporting Requirement

Section 340 general primary care services delivery grants are subject to the Public Health System Reporting Requirement, PHS 92.01. Reporting requirements have been approved by the OMB under control numbers 0937–0195. Under this requirement, the community-based nongovernmental applicant must prepare and submit a Public Health System Impact Statement (PHSIS). The PHSIS is intended to provide information to State and local health officials to keep them apprised of proposed health services grant applications submitted by community-based nongovernmental organizations within their jurisdictions. Applicants may submit the Project Summary section of the application as the PHSIS. Community-based nongovernmental applicants are required to submit a copy of the face page of the application (SF 424) to the head of the appropriate State and local health agencies in the area(s) to be impacted no later than the Federal application receipt due date. In the OMB Catalog of Federal Domestic Assistance, the Health Care for the Homeless program is listed as Number 93.151.

Dated: July 16, 1996.

Ciro V. Sumaya,

Administrator.

Appendix A

Region I

(CT, ME, MA, NH, RI, VT)

Grants Management Officer, PHS Office of Grants Management, John F. Kennedy Federal Bldg. #1400, Boston, Massachusetts 02203, (617) 565–1426

Region II

(NJ, NY, PR, VI)

Grants Management Officer, PHS Office of Grants Management, 26 Federal Plaza #3337, New York, New York 10278, (212) 264–2549

Region III

(DE, DC, MD, PA, VA, WV)

Grants Management Officer, PHS Office of Grants Management, 3535 Market Street #10–140, Philadelphia, Pennsylvania 19101, (215) 596–6655

Region IV

(AL, FL, GA, KY, MS, NC, SC, TN)

Grants Management Officer, PHS Office of Grants Management, 101 Marietta Tower, Suite 1121, Atlanta, Georgia 30323, (404) 331–2597

Region V

(IL, IN, MI, MN, OH, WI)

Grants Management Officer, PHS Office of Grants Management, 105 West Adams,

17th Floor, Chicago, Illinois 60603, (312) 353–8700

Region VI

(AR, LA, NM, OK, TX)

Grants Management Officer, PHS Office of Grants Management, 1200 Main Tower Bldg. #1800, Dallas, Texas 75202, (214) 767–3885

Region VII

(IA, KS, MO, NE)

Grants Management Officer, PHS Office of Grants Management, 601 East 12th Street #501, Kansas City, Missouri 64106, (816) 426–5841

Region VIII

(CO, MT, ND, SD, UT, WY)

Grants Management Officer, PHS Office of Grants Management, 1961 Stout St., Fed. Bldg. #492, Denver, Colorado 80294, (303) 844–4461

Region XI

(AS, AZ, CA, GU, HI, NV, TT)

Grants Management Officer, PHS Office of Grants Management, 50 United Nations Plaza #331, San Francisco, California 94102, (415) 437–8125

Region X

(AK, ID, OR, WA)

Grants Management Officer, PHS Office of Grants Management, 2201 6th Avenue, #710, Seattle, Washington 98121, (206) 615–2474

[FR Doc. 96–18442 Filed 7–19–96; 8:45 am]

BILLING CODE 4160–15–P

DEPARTMENT OF THE INTERIOR

Office of the Secretary

Exxon Valdez Oil Spill Public Advisory Group; Meeting

AGENCY: Department of the Interior, Office of the Secretary.

ACTION: Notice of meeting.

SUMMARY: The Department of the Interior, Office of the Secretary is announcing a public meeting of the Exxon Valdez Oil Spill Public Advisory Group.

DATES: August 7–8, 1996, at 9:00 a.m.

ADDRESSES: First floor conference room, 645 ''G'' Street, Anchorage, Alaska.

FOR FURTHER INFORMATION CONTACT: Douglas Mutter, Department of the Interior, Office of Environmental Policy and Compliance, 1689 ''C'' Street, Suite 119, Anchorage, Alaska, (907) 271–5011.

SUPPLEMENTARY INFORMATION: The Public Advisory Group was created by Paragraph V.A.4 of the Memorandum of Agreement and Consent Decree entered into by the United States of America and the State of Alaska on August 27, 1991, and approved by the United States District Court for the District of Alaska in settlement of *United States of America* v. *State of Alaska*, Civil Action No. A91–081 CV. The agenda will include a review of current restoration activities and recommendations on projects for the fiscal year 1997 restoration work plan.

Kenneth D. Naser,

Acting Director, Office of Environmental Policy and Compliance.

[FR Doc. 96–18538 Filed 7–19–96; 8:45 am]

BILLING CODE 4310–RG–P

Fish and Wildlife Service

Notice of Receipt of Applications for Permit

AGENCY: Fish and Wildlife Service, Interior.

ACTION: Notice of receipt of application for permit.

The following applicants have applied for a permit to conduct certain activities with endangered species. This notice is provided pursuant to Section 10(c) of the Endangered Species Act of 1973, as amended (16 U.S.C. 1531 *et seq.*):

PRT–816989

Applicant: Dr. Michael S. Gaines, University of Miami, Coral Gables, Florida

The applicant requests a permit to take (capture, collect tissue samples, and release) Key Largo woodrats, *Neotoma floridana smalli*, and to take (capture and release) Key Largo cotton mice, *Peromyscus gossypinus allapaticola*, on Key Largo State Botanical Site and Crocodile Lakes National Wildlife Refuge for the purpose of enhancement of survival of the species.

PRT–817011

Applicant: *Douglas N. Shelton, Barry A. Vittor & Associates, Mobile, Alabama*

The applicant requests a permit to take (capture and sacrifice for genetic analyses) up to three individuals of each of the following freshwater mussel species, fine-lined pocketbook, *Lampsilis altilis*, orange-nacre mucket, *Lampsilis perovalis*, Alabama moccasinshell, *Medionidus acutissimus*, Coosa moccasinshell, *Medionidus parvulus*, and triangular kidneyshell, *Ptychobranchus greeni*, throughout the species' ranges in Alabama, Georgia, Florida, Louisiana, Mississippi, and Tennessee for the purpose of enhancement of survival of the species.

PRT–791799

Applicant: Douglas N. Shelton, Barry A. Vittor & Associates, Mobile, Alabama

PRT–791801

Applicant: Barry A. Vittor, Barry A. Vittor & Associates, Mobile, Alabama

The applicants request to amend their existing authorizations to take (capture, identify, and release) threatened and endangered freshwater mussels in order to work throughout the States of Missouri, Indiana, and Pennsylvania, and to have authority to take (translocate) threatened and endangered freshwater mussels under the direction of Fish and Wildlife Service for the purpose of enhancement of survival of the species.

PRT–801592

Applicant: Kevin Markham and Annette Taylor, CZR Incorporated, Wilmington, North Carolina

The applicant seeks to amend their existing authorization in order to take (capture, identify, and release) Tar spinymussels, *Elliptio steinstansana*, in addition to previously authorized take of dwarf wedge mussels, *Alasmidonta heterodon*, throughout the species' range in North Carolina for the purpose of enhancement of survival of the species.

Written data or comments on these applications should be submitted to: Regional Permit Coordinator, U.S. Fish and Wildlife Service, 1875 Century Boulevard, Suite 200, Atlanta, Georgia 30345. All data and comments must be received within 30 days of the date of this publication.

Documents and other information submitted with these applications are available for review, subject to the requirements of the Privacy Act and Freedom of Information Act, by any party who submits a written request for a copy of such documents to the following office within 30 days of the date of publication of this notice: U.S. Fish and Wildlife Service, 1875 Century Boulevard, Suite 200, Atlanta, Georgia 30345 (Attn: David Dell, Permit Biologist). Telephone: 404/679–7313; fax: 404/679–7081.

Dated: July 15, 1996.

Noreen K. Clough,

Regional Director

[FR Doc. 96–18470 Filed 7–19–96;8:45am]

BILLING CODE 4310–55–P

Issuance of a Permit for Incidental Take of Threatened and Endangered Species

AGENCY: Fish and Wildlife Service, Interior.

ACTION: Notice.

SUMMARY: On November 17, 1995, a notice was published in the Federal Register (60 FR 57722) that an application had been filed with the U.S. Fish and Wildlife Service (Service) by Plum Creek Timber Company, L.P., of Seattle, Washington, for a permit to incidentally take the threatened northern spotted owl (*Strix occidentalis caurina*), marbled murrelet (*Brachyramphus marmoratus marmoratus*), and grizzly bear (*Ursus arctos*=U.a. *horribilis*), and the endangered gray wolf (*Canis lupus*), pursuant to section 10(a)(1)(B) of the Endangered Species Act (Act) of 1973, as amended (16 U.S.C. 1532 et seq.). This is in the course of the otherwise legal activities of forest management and related incidental land use activities in portions of King and Kittitas Counties, Washington, pursuant to the Habitat Conservation Plan, its Implementation Agreement, and the incidental take permit.

Notice is hereby given that on June 27,1996, as authorized by the Act, the Service issued incidental take permit PRT–808398 to Plum Creek Timber Company, L.P., subject to certain conditions set forth therein. The permit was granted only after it was determined that it was applied for in good faith, that by granting the permit it will not lead to the jeopardy of the species, and that it will be consistent with the purposes and policies set forth in the Act.

FOR FURTHER INFORMATION CONTACT: Supervisor, U.S. Fish and Wildlife Service, Western Washington Office, 3704 Griffin Lane SE, Suite 102, Olympia, Washington 98501–2192, telephone (360–753–9440).

Dated: July 12, 1996.

Don Weathers,

Acting Regional Director, Region 1, Portland, Oregon.

[FR Doc. 96–18471 Filed 7–19–96; 8:45 am]

BILLING CODE 4310–55–P

Bureau of Land Management

[CO–078–95–1610–00]

Glenwood Springs Resource Management Plan Amendment

AGENCY: Bureau of Land Management, Interior.

ACTION: Notice of Intent to amend the Glenwood Springs Resource Management Plan as it relates to travel management decisions for the Castle Peak area, Eagle County, Colorado.

SUMMARY: Pursuant to section 102 of the National Environmental Policy Act of 1969 and section 202 of the Federal Land Policy and Management Act of 1976, the Bureau of Land Management, Grand Junction District, Glenwood Springs Resource Area, will prepare a Travel Management Plan and Environmental Assessment on the proposed amendment to the Glenwood Springs Resource Management Plan as it relates to the Castle Peak Travel Management Planning Area. The decisions to be reviewed and analyzed for plan amendment include Transportation Management, Recreation Resource Management, and Off Highway Vehicle Management. The Castle Peak Travel Management Planning Area includes public lands east and south of the Colorado River, west of Highway 131, and north of the Eagle River in Eagle County, Colorado. The Planning Area boundary is the same as Colorado Division of Wildlife's Game Management Unit 35. A Travel Management Plan and Environmental Assessment on the proposed RMP amendment will be prepared to analyze proposed travel management actions, possible alternatives and impacts for the public lands within the Castle Peak Travel Management Planning Area.

DATES: Interested persons may submit comments on or before August 22, 1996 regarding this proposal to amend certain decisions in the Resource Management Plan as they relate to travel management in the Castle Peak area.

ADDRESSES: Michael S. Mottice, Area Manager, Glenwood Springs Resource Area, P.O. Box 1009, 50629 Highway 6 & 24, Glenwood Springs, Colorado 81602.

FOR FURTHER INFORMATION CONTACT: Additional information concerning this proposal is available for review at the above address.

SUPPLEMENTARY INFORMATION: In response to increased recreational demands and problems related to public use and access in the Castle Peak Area, a Plan Amendment and Environmental Assessment are needed to implement new decisions and measures specifically related to travel management. Since the existing Off-Highway Vehicle (OHV) designations were put in place in 1984, reports from the public identifying travel impacts and their related effects on vegetation, wildlife habitat, hunting, wilderness suitability, soils, livestock grazing and law enforcement have been received. Three open house public meetings were held in mid-April, 1996 in Gypsum, Eagle and McCoy, Colorado to gather public input regarding the issues, concerns, and need for a Travel Management Plan in the Castle Peak area. Comments received during these scoping sessions revealed that changes in the existing travel management decisions are needed.

A resource area-wide evaluation of existing OHV designations and travel management use, completed by the BLM in 1994, identified resource damage and use conflicts. With forecasts of reduced budgets, completing a resource area-wide RMP amendment for travel management is not feasible. Consequently, travel management problems will be resolved on a landscape basis, focusing on well-defined geographic areas with relatively high use, in areas that provide a variety of activities, and on sites with identified resource damage and use conflicts. Based on this public criteria and the public comments received in recent public meetings, the Castle Peak Planning Area is selected as the initial geographic area to resolve travel management issues. The goal of the Travel Management Plan and RMP amendment is to protect the land and resource values while continuing to provide a variety of motorized and non-motorized recreational opportunities.

Proposed changes to travel management decisions in the Castle Peak Planning Area involve (1) developing an updated transportation plan for the area, which encompasses roads, motorized trails, non-motorized trails, maintenance schedules and access points, (2) updating OHV designations, and (3) updating recreation management objectives.

Mark T. Morse,

District Manager

[FR Doc. 96–17179 Filed 7–19–96; 8:45 am]

BILLING CODE 4310–JB–P

[UT–943–1420–00–269Z]

Filing of Plat of Survey

AGENCY: Bureau of Land Management, Interior.

ACTION: Notice.

SUMMARY: These plats of survey of the following described land have been filed in the Utah State Office, Salt Lake City, Utah:

Group	Township	Range	Meridian	Approved	Type
0771	01 S.	04 W.	USM	96/04/18	Dep. Resurvey.
0777	28 S.	03 E.	SLM	96/04/18	Dep. Resurvey.
0778	21 S.	01 W.	SLM	96/05/22	Dep. Resurvey.
0786	18 S.	01 W. ½	SLM	96/05/22	Dep. Resurvey.
0786	18 S.	02 W.	SLM	96/05/22	Dep. Resurvey.
0792	29 S.	03 E.	SLM	96/04/18	Dep. Resurvey.
0804	11 N.	08 E.	SLM	96/05/22	Dep. Resurvey.
0807	33 S.	23 E.	SLM	96/05/22	Dep. Resurvey.
0813	43 S.	10 W.	SLM	96/04/18	Dep. Resurvey.
0819	26 S.	01 W.	SLM	96/05/22	Dep. Resurvey.
0827	01 S.	07 W.	SLM	96/04/18	Dep. Resurvey.
0828	23 S.	08 E. ½	SLM	96/05/22	Dep. Resurvey.
0828	23 S.	09 E.	SLM	96/05/22	Dep. Resurvey.
0241–A	03 S.	03 W.	SLM	96/01/31	Supplemental.
241–B	03 S.	03 W.	SLM	96/01/31	Supplemental
241–C	04 S.	03 W.	SLM	96/01/31	Supplemental.
241–D	04 S.	03 W.	SLM	96/01/31	Supplemental.
242–A	06 S.	03 W.	SLM	96/01/31	Supplemental
242–B	06 S.	03 W.	SLM	96/01/31	Supplemental.
242–C	06 S.	03 W.	SLM	96/01/31	Supplemental.
243	42 S.	16 W.	SLM	96/01/31	Supplemental.
7385	23 S.	09 E.	SLM	96/05/22	Mineral Survey.
7389	29 S.	14 W.	SLM	96/03/28	Mineral Survey.

Donald A. Buhler,

Chief, Branch of Cadastral Survey.

[FR Doc. 96–18528 Filed 7–19–96; 8:45 am]

BILLING CODE 4310–DQ–M

National Park Service

Lake Mead National Recreation Area Operation of a Marina at Willow Beach

SUMMARY: The National Park Service will shortly be seeking offers to operate a marina at Willow Beach Site within Lake Mead National Recreation Area. This will be a 125 slip marina with modest food and store operations along with related services. There is no existing operator. This opportunity is fully competitive. There is an existing facility that is government-owned. An initial capital investment of approximately $300,000 will be required.

SUPPLEMENTARY INFORMATION: Interested parties should contact Ms. Teresa Jackson, Office of Concession Program Management, Pacific Great Basin System Support Office, at (415) 744–3981 to be placed on a mailing list to receive a letter announcing the availability of the Prospectus. At that time, the cost for each Prospectus will be $30.00.

Dated: July 12, 1996.

Stanley T. Albright,

Field Director, Pacific West Area.

[FR Doc. 96–18546 Filed 7–19–96; 8:45 am]

BILLING CODE 4310–70–P

Subsistence Resource Commission Meeting

SUMMARY: The Superintendent of Denali National Park and the Chairperson of the Subsistence Resource Commission for Denali National Park announce a forthcoming meeting of the Denali National Park Subsistence Resource Commission.

The following agenda items will be discussed:

(1) Call to order by Chair
(2) Roll call and confirmation of quorum
(3) Superintendent's welcome and introductions
(4) Approval of minutes of last meeting
(5) Additions and corrections to agenda
(6) Federal Subsistence Management Program update:
  a. Federal Subsistence Board actions.
(7) Old business:
  a. Agency reports
  b. Subsistence Issue Paper report
(8) New business:
  a. SRC Chairperson Workshop
(9) Public and other agency comments
(10) Set time and place of next meeting
(11) Adjournment

DATES: The meeting will he held Friday, August 9, 1996. The meeting will begin at 9 a.m. and conclude around 6 p.m.

LOCATION: The meeting will he held at the Community Center, Healy, Alaska.

FOR FURTHER INFORMATION CONTACT: Steve Martin, Superintendent, Denali National Park and Preserve, P.O. Box 9, Denali Park, Alaska 99755. Phone (907) 683–2294.

SUPPLEMENTARY INFORMATION: The Subsistence Resource Commissions are authorized under Title VIII, Section 808, of the Alaska National Interest Lands Conservation Act, Pub. L. 96–487, and operate in accordance with the provisions of the Federal Advisory Committees Act.

Ralph H. Tingey,

Acting Field Director.

[FR Doc. 96–18547 Filed 7–19–96; 8:45 am]

BILLING CODE 4310–70–M

Bureau of Reclamation

Resource Management Plan and Draft Environment Impact Statement for Elephant Butte and Caballo Reservoirs, New Mexico

AGENCY: Bureau of Reclamation, Interior.

ACTION: Notice of scoping meeting and intent to prepare a draft environment impact statement.

SUMMARY: Pursuant to the National Environmental Policy Act of 1969 (NEPA), as amended, the Bureau of Reclamation (Reclamation) proposes through a private consultant to prepare a draft environment impact statement (DEIS) in conjunction with the Resource Management Plan (RMP) for Elephant Butte and Caballo Reservoirs, New Mexico. Reclamation through its' consultant, will conduct a scoping meeting to inform the public of significant issues identified to date, and to identify additional issues that should be analyzed in the DEIS.

DATES: The meeting will be held on August 28, 1996, An ''Open House'' will

be held from 4:00 p.m. to 6:00 p.m. with a more structured meeting scheduled to begin immediately following the ''Open House''.

ADDRESSES: The meeting will be held at the Civic Center, 400 West 4th Street, Truth or Consequences, New Mexico.

FOR FURTHER INFORMATION CONTACT: Mr. Clay McDermeit, Reclamation Team Leader for the Elephant Butte and Caballo Reservoir RMP, 505 Marquette N.W., Suite 1313, Albuquerque, New Mexico, 87102; Telephone (505) 248–5391; or Ms. Rosemary Romero, Public Involvement Specialist, Western Network, 811 St. Michael's Drive, Suite 106, Santa Fe, New Mexico 87505; Telephone 1–800–326–9805.

SUPPLEMENTARY INFORMATION: The purpose of the RMP is to produce a written management document, consistent with existing laws, treaties, and compacts, that may be used as guide by Reclamation and other involved agencies in the allocation of resources and appropriate uses of both lands and waters within the reservation boundaries.

The RMP will address: (1) Multiple uses, and (2) other agency management functions as delegated through various agreements with Reclamation. The DEIS will present an analysis of the impacts of alternative management practices associated with the land and water resources at both reservoirs.

Four ''open house'' meetings were previously held during February 1996 in El Paso, Las Cruces, Truth or Consequences and Albuquerque to solicit input form agencies and the general public on issues that should be addressed during the development of the RMP. As a result of these meetings and further discussions with the planning work group and the general public, it has been determined that a draft environmental impact statement will be prepared in conjunction with the RMP.

Reclamation has previously prepared four NEPA documents that address operation and maintenance activities on the Rio Grande in the vicinity of both reservoirs. The documents are:

* Final Environmental Impact Statement, Operation and Maintenance Program for the Rio Grande-Velarde to Caballo Dam-Rio Grande and Middle Rio Grande Projects (1977);

* Final Environmental Assessment and Finding of No Significant Impact, Rio Grande Conveyance rehabilitation, Operation and Maintenance Program, Elephant Butte Reservoir, New Mexico (1982);

* Final Environmental Assessment and Finding of No Significant Impact, Rio Grande Channel Restoration, Operation and Maintenance Program, Elephant Butte Dam to Caballo Reservoir, Sierra County, New Mexico, (1985); and

* Final Supplement to the Final Environmental Impact Statement-River Maintenance Program for the Rio Grande-Velarde to Caballo Dam, Rio Grande and Middle Rio Grande Projects, New Mexico.

During the ''Open House'' and the more structured part of the Scoping Meeting, agencies and the general public are encouraged to submit written comments and may request additional clarification of the RMP and EIS process. Anyone interested in more information concerning the study should contact Mr. Clay McDarmeit or Ms. Romero.

The Truth or Consequences Civic Center is accessible to the disabled. However, any individuals requiring special assistance at the meeting should make their needs known in advance to Ms. Romero.

Dated: July 16, 1996.

Garry Mr. Rowe,

Area Manager.

[FR Doc. 96–18469 Filed 7–19–96; 8:45 am]

BILLING CODE 4310–94–M

Conservation Advisory Group, Yakima River Basin Water Enhancement Project, Yakima, Washington

AGENCY: Bureau of Reclamation, Interior.

ACTION: Notice of meetings.

SUMMARY: Title XII of Public Law 103–434 directs the Secretary of the Interior, in consultation with the State of Washington, the Yakama Indian Nation, Yakima River Basin irrigators and other interested parties, to establish the Yakima River Basin Water Conservation Advisory Group within 12 months of enactment. The purpose of the Conservation Advisory Group is to provide technical advice and counsel to the Secretary and the State on the structure, implementation, and oversight of the Yakima River Basin Water Conservation Program.

DATES: Meetings will be held:

- July 30 and 31, 1996 at the Arboretum, 1401 Arboretum Drive, Yakima, Washington—9 a.m. to 4 p.m..
- August 22, 1996, at the Yakama Indian Nation, 401 Ft. Rd., Toppenish, Washington—9 a.m. to 4 p.m..
- September 25 and 26, 1996, at the Bureau of Reclamation, 1917 Marsh Road, Yakima, Washington—9 a.m. to 4 p.m.

FOR FURTHER INFORMATION CONTACT: Walt Fite, Program Manager, Yakima River Water Enhancement Project, P.O. Box 1749, Yakima, Washington 98907; (509) 575–5848 ext. 267.

SUPPLEMENTARY INFORMATION: The Basin Conservation Program is structured to provide economic incentives with cooperative Federal, State, and local funding to stimulate the identification and implementation of structural and nonstructural cost-effective water conservation measures in the Yakima River basin. Improvements in the efficiency of water delivery and use will result in improved streamflows for fish and wildlife and improve the reliability of water supplies for irrigation.

Dated: July 9, 1996.

James V. Cole,

Manager, Upper Columbia Area Office.

[FR Doc. 96–18490 Filed 7–19–96; 8:45 am]

BILLING CODE 4310–94–M

DEPARTMENT OF LABOR

Pension and Welfare Benefits Administration

[Application No. D–10173, et al.]

Proposed Exemptions; Mewbourne Oil Company, Inc. Plan (the Plan)

AGENCY: Pension and Welfare Benefits Administration, Labor.

ACTION: Notice of proposed exemptions.

SUMMARY: This document contains notices of pendency before the Department of Labor (the Department) of proposed exemptions from certain of the prohibited transaction restrictions of the Employee Retirement Income Security Act of 1974 (the Act) and/or the Internal Revenue Code of 1986 (the Code).

Written Comments and Hearing Requests

Unless otherwise stated in the Notice of Proposed Exemption, all interested persons are invited to submit written comments, and with respect to exemptions involving the fiduciary prohibitions of section 406(b) of the Act, requests for hearing within 45 days from the date of publication of this Federal Register Notice. Comments and request for a hearing should state: (1) The name, address, and telephone number of the person making the comment or request, and (2) the nature of the person's interest in the exemption and the manner in which the person would be adversely affected by the exemption. A request for a hearing must also state the issues to be addressed and include a general description of the evidence to be

presented at the hearing. A request for a hearing must also state the issues to be addressed and include a general description of the evidence to be presented at the hearing.

ADDRESSES: All written comments and request for a hearing (at least three copies) should be sent to the Pension and Welfare Benefits Administration, Office of Exemption Determinations, Room N–5649, U.S. Department of Labor, 200 Constitution Avenue, NW., Washington, DC 20210. Attention: Application No. stated in each Notice of Proposed Exemption. The applications for exemption and the comments received will be available for public inspection in the Public Documents Room of Pension and Welfare Benefits Administration, U.S. Department of Labor, Room N–5507, 200 Constitution Avenue, NW., Washington, DC 20210.

Notice to Interested Persons

Notice of the proposed exemptions will be provided to all interested persons in the manner agreed upon by the applicant and the Department within 15 days of the date of publication in the Federal Register. Such notice shall include a copy of the notice of proposed exemption as published in the Federal Register and shall inform interested persons of their right to comment and to request a hearing (where appropriate).

SUPPLEMENTARY INFORMATION: The proposed exemptions were requested in applications filed pursuant to section 408(a) of the Act and/or section 4975(c)(2) of the Code, and in accordance with procedures set forth in 29 CFR Part 2570, Subpart B (55 FR 32836, 32847, August 10, 1990). Effective December 31, 1978, section 102 of Reorganization Plan No. 4 of 1978 (43 FR 47713, October 17, 1978) transferred the authority of the Secretary of the Treasury to issue exemptions of the type requested to the Secretary of Labor. Therefore, these notices of proposed exemption are issued solely by the Department.

The applications contain representations with regard to the proposed exemptions which are summarized below. Interested persons are referred to the applications on file with the Department for a complete statement of the facts and representations.

Mewbourne Oil Company, Inc., Plan (the Plan) Located in Tyler, Texas

[Application No. D–10173]

Proposed Exemption

The Department is considering granting an exemption under the authority of section 408(a) of the Act and section 4975(c)(2) of the Code and in accordance with the procedures set forth in 29 CFR Part 2570, Subpart B (55 FR 32836, 32847, August 10, 1990). If the exemption is granted, the restrictions of sections 406(a), 406(b)(1) and (b)(2) of the Act and the sanctions resulting from the application of section 4975 of the Code, by reason of section 4975(c)(1)(A) through (E) of the Code, shall not apply to the past contribution by Mewbourne Oil Company (the Employer) to the Plan of a US Treasury Strip Bond (the Bond) and the subsequent exchange by the Employer of the Bond for cash provided that: (a) the contribution was a one-time transaction; (b) the Bond was valued at the fair market value as of the date of the contribution; (c) no commissions were paid in connection with the transaction; (d) the Bond represented less than 25% of the fair market value of the Plan's assets at the time of the contribution; and (e) the Bond was returned to the Employer in exchange for cash in the amount of $173,759 plus interest.

EFFECTIVE DATE: If the proposed exemption is granted, the exemption will be effective February 11, 1994.

Summary of Facts and Representations

1. The Plan, established and maintained by Mewbourne Oil Company, Inc., is a defined benefit plan that currently has 130 plan participants and plan assets of $4.6 million as of August 25, 1995. Joseph F. Odom, J. Roe Buckley and Curtis Mewbourne serve as the Plan trustees.

2. On February 11, 1994, the Bond was transferred to the Plan from a nonqualified corporate fund (the Transfer) which was established by the Employer for the purpose of holding future contributions to the Plan to satisfy the funding requirements for the year ending 1994. The Bond was U.S. Treasury Zero Strips maturing in August 15, 2010 at $525,000. At the time of the Transfer, the Plan trustees requested that Merrill Lynch calculate the value of the Bond. Merrill Lynch represented that it determined that the Bond had a value of $173,759 on February 11, 1994. Merrill Lynch used the February 14, 1994 edition of the Wall Street Journal's published value of $331.25 per $1000 bond to calculate the Bond's value and adjusted this quote by $147 to reflect the odd lot transfer to the Plan resulting in the $173,759 value.

3. The applicant represents that the contribution in kind of the Bond was made in error. Ms. Mitzi Perry of Werntz & Associates, an actuarial consultant for employee benefit plans, represented that in late 1993, Mr. Curtis Mewbourne, President of the Mewbourne Oil Company, Inc., contacted Ms. Perry regarding whether 1994 contributions could be made from the nonqualified fund. Ms. Perry informed Mr. Mewbourne that this could be done. Mr. Mewbourne assumed from his conversation with Ms. Perry that he could transfer the Bond from the nonqualified account to the Plan. As a result of his misunderstanding, Mr. Mewbourne instructed Merrill Lynch to transfer the Bond to the Plan on February 15, 1994.

4. At the end of the Plan year 1994, Ms. Perry reviewed the financial information in preparation of the actuarial valuation and discovered that the contributions for the year were made partially in the cash amount of $126,000 and the Bond. Ms. Perry represents that she immediately informed Mr. Mewbourne that the contribution of the Bond was a prohibited transaction. Mr. Mewbourne took immediate steps to correct the mistake under Ms. Perry's advisement. On January 30, 1995, a cash contribution of $173,759 was made to the Plan in exchange for the Bond. An additional $7,853 was paid to the Plan on January 31, 1995 reflecting interest earned based on the average investment earnings rate for the Plan during the period from February 11, 1994 to January 31, 1995 during which the Plan held the Bond. The applicant represents that no loss resulted to the Plan as a result of the transactions. In this regard, the applicant represents that the Plan received more than the fair market value of the Bond when the Employer exchanged the Bond in the above described transaction. According to the applicant, Merrill Lynch's valuation of the Bond as of January 31, 1995 equaled $157,988 reflecting the price that the Plan would have received had it sold the Bond on January 31, 1995.

5. In summary, the applicant represents that the subject transaction satisfies the criteria contained in section 408(a) of the Act because: (a) the contribution was a one-time transaction; (b) the transaction occurred as a result of a misunderstanding between the Plan trustees and the pension consultant; (c) when the mistake was discovered, the Bond was removed from the Plan and replaced with cash in the amount of the value of the Bond at the time of the Transfer plus interest.

FOR FURTHER INFORMATION CONTACT: Allison Padams of the Department, telephone (202) 219–8971. (This is not a toll-free number.)

Dillard's Marine & Sports Center, Inc., Profit Sharing Plan (the Plan) Located in Anderson, South Carolina

[Application No. D–10214]

Proposed Exemption

The Department is considering granting an exemption under the authority of section 408(a) of the Act and section 4975(c)(2) of the Code and in accordance with the procedures set forth in 29 C.F.R. Part 2570, Subpart B (55 FR 32836, 32847, August 10, 1990). If the exemption is granted, the restrictions of sections 406(a) and 406(b)(1) and (b)(2) of the Act and the sanctions resulting from the application of section 4975 of the Code, by reason of section 4975(c)(1) (A) through (E) of the Code shall not apply to the proposed loan of $47,962.50 (the Loan) by the Plan from the individual account of William M. Dillard Jr., to Dillard's Marine & Sports Center, Inc., the sponsoring employer of the Plan (the Employer) and a party in interest with respect to the Plan; provided that (1) the terms and conditions of the proposed Loan are no less favorable to the Plan than those obtainable in an arm's-length transaction with an unrelated third-party at the time the proposed Loan is consummated; (2) the Loan will at all times be secured by collateral having a value that exceeds 150 percent of its outstanding principal; (3) the Loan will be at all times less than 25 percent of the balance in the individual account maintained in the Plan for William M. Dillard, Jr.; and (4) an independent fiduciary will approve and monitor the transaction and take whatever actions are necessary to protect the interests of the Plan.

Summary of Facts and Representations

1. The Employer, a South Carolina corporation, is a manufacturer and wholesaler of sporting goods in several states in the eastern part of the United States and also in Germany. There are three shareholders who own the Employer. William M. Dillard, Jr., (Mr. Dillard) holds 63.3 percent of the issued and outstanding shares, his son, William N. Dillard, III holds 3.8 percent, and Patrick H. Hickok holds 32.9 percent. The Employer currently employs 45 individuals.

2. The Plan is a defined contribution plan with individual accounts for 33 participants and total assets of $450,682, as of March 31, 1996. The applicant represented that the individual account in the Plan for Mr. Dillard had assets of $297,450, as of March 31, 1996. The Plan trustee is Mr. Dillard.

Richard L. King (Mr. King), a principal of Southeastern Trust Company (Southeastern Trust), a charted trust company under the banking laws of South Carolina, serves as investment manager for the Plan and for Mr. Dillard's personal assets. Southeastern Trust also serves the Plan as custodian of its assets. The applicant represents that Mr. Dillard's individual account in the Plan and his personal assets when combined are less than ½ of 1 percent of the total assets Southeastern Trust currently administers.

3. The applicant represents that the Loan will be made only from Mr. Dillard's individual account in the Plan, at his sole direction, and represents that the Loan will be used by the Employer to pay-off and partially pay-off loans currently outstanding with commercial lenders. The Loan will be collaterized by a first mortgage executed by Mr. Dillard on real property leased to and used by the Employer, and located at 113 Shockley Ferry Road, Anderson County, South Carolina.

The real property pledged as collateral for the Loan has been appraised, as of January 4, 1996, by H. Clinton Taylor (Mr. Taylor), State Certified General Real Estate Appraiser, South Carolina, Certificate Number CG 189, located in Anderson County, South Carolina. Mr. Taylor determined that the real property had a fair market value of $180,000 of which $94,000 is attributable to land. The applicant represents that at all times the collateral for the Loan will exceed 150 percent of its outstanding principal.

4. The Loan provides for the payment of interest at 9.75 percent per annum over a period of 5 years with repayments by the Employer made in quarterly installments of principal and interest in the amount of $3,058.72. The terms of the Loan also provide that if the quarterly installments are 15 days late the Employer will pay a penalty of 5 percent of the amount due and owing.

Also, repayment of the Loan may be accelerated by the Employer without incurring a penalty.

Mr. Robert L. Tennyson, Commercial Real Estate, of the Wachovia Bank of South Carolina, N.A., located in Greenville, South Carolina, in a letter to Mr. King, dated December 21, 1995, represented that the interest rate Wachovia would charge on a 5 year period loan, to be repaid in quarterly installments, and secured by a first priority mortgage equal to approximately 150 percent of the loan, would be approximately 7.75 percent.

The applicant and Mr. King, as independent fiduciary, represent that the Loan is in the interest of the Plan because the Loan will pay a higher rate of interest than the current rate of return from the other investments of the Plan. Also, the applicant and Mr. King represent that the terms and conditions of the Loan provide more than adequate protection for the rights of the participant and his beneficiaries because of the excessive fair market value of the collateral for the Loan. Mr. King further represents that as independent fiduciary he will act in the best interests of the Plan and will protect the interests of the Plan by foreclosing, if necessary, under the terms of the note and mortgage executed by Mr. Dillard.

5. In summary, the applicant represents that the proposed transaction will satisfy the provisions of section 408(a) of the Act because (a) the Loan will be adequately secured at all times; (b) the Loan at all times will be less than 25 percent of the balance in the individual account maintained for Mr. Dillard; (c) the terms and conditions of the Loan will be as favorable to the Plan as obtainable from an unrelated party; and (d) Mr. Dillard, the only participant in the Plan whose account is affected by this proposed transaction, has determined that the proposed transaction would be in the interest of his account in the Plan, and he desires that the proposed transaction be undertaken.

Notice to Interested Persons: Since Mr. Dillard is the only person in the Plan to be affected by the proposed transaction, it has been determined that there is no need to distribute the notice of proposed exemption to interested persons. Comments and requests for a public hearing are due 30 days from the date of publication of this notice of proposed exemption in the Federal Register.

For Further Information Contact: Mr. C.E. Beaver of the department, telephone (202) 219–8881. (This is not a toll-free number.)

Normike Industries, Inc., Profit Sharing Plan (the Plan), Located in Plainville, Connecticut

[Application No. D–10239]

Proposed Exemption

The Department is considering granting an exemption under the authority of section 408(a) of the Act and section 4975(c)(2) of the Code and in accordance with the procedures set forth in 29 CFR Part 2570, Subpart B (55 FR 32836, 32847, August 10, 1990). If the exemption is granted the restrictions of sections 406(a), 406 (b)(1) and (b)(2) of the Act and the sanctions resulting

from the application of section 4975 of the Code, by reason of section 4975(c)(1)(A) through (E) of the Code, shall not apply to the proposed sale by the Plan of certain improved real property located in Plainville, Connecticut (the Property) to Norman and Diane Stoll, parties in interest with respect to the Plan; provided that the following conditions are satisfied:

(A) All terms of the transaction are at least as favorable to the Plan as those which the Plan could obtain in an arm's-length transaction with an unrelated party;

(B) The Plan incurs no costs or expenses related to the transaction;

(C) The Plan receives a cash purchase price for the Property in the amount of no less than the greater of (1) the Property's fair market value as of the date of the sale, or (2) $57,500;

(D) Before the transaction is consummated, the Plan has received rental payments of no less than the Property's fair market rental value for each month of the Plan's ownership of the Property in which the Property was occupied by Normike Industries, Inc. (the Employer), the sponsor of the Plan; and

(E) Within 60 days of the publication in the Federal Register of a notice granting the exemption proposed herein, if granted, the Employer makes final payment to the Internal Revenue Service of any remaining unpaid excise taxes which are applicable under section 4975(a) of the Code by reason of the Employer's lease of the Property from the Plan.

Summary of Facts and Representations

1. The Plan is a defined contribution profit-sharing plan with three participants and total assets of $133,603 as of June 30, 1995. The Plan is sponsored by the Employer, Normike Industries, Inc., a closely-held Connecticut corporation engaged in the precision jig grinding of parts for tool and die manufacturing. The trustees of the Plan are Norman Stoll and his spouse, Diane Stoll (the Stolls), each of whom is also a participant in the Plan. Mr. Stoll is also president of the Employer.

2. Among the assets in the Plan is the Property, an industrial condominium unit located at 1 Town Line Road, Town Line Tradesman Center in Plainville, Connecticut. The Plan purchased the Property from an unrelated party on December 11, 1993 for a purchase price of $57,500.[1] The Stolls represent that they caused the Plan to purchase the Property with the intention of leasing it to the Employer, and they represent that they were not aware that such an arrangement might be in violation of the prohibited transactions provisions of the Act. In January and February of 1994 the Employer undertook to improve and refurbish the Property to enable the Employer to move its operations into the Property. A lease effective March 1, 1994 (the Lease) was executed between the Plan and the Employer under which the Employer agreed to lease the Property from the Plan for an initial term commencing March 1, 1994 and ending April 30, 1997, with an option to renew for an additional five years. The Lease provides for fixed rent of $9,000 per annum, payable monthly, for the first two years and $12,000 per annum, payable monthly, for the remainder of the Lease's initial term. During any renewal term, the rent would increase pursuant to a ''cost of living'' factor utilizing the consumer price index. The Stolls represent that they determined the rental amounts on the basis of a survey of the rental market at the time of the Lease execution. The Lease also required the Employer to pay all real estate taxes and utility charges. The Stolls represent that other Lease terms are standard provisions in commercial real property leases. The Stolls represent that the total rental payments received by the Plan pursuant to the Lease have resulted in an annual rate of return of seventeen percent on the Plan's investment in the Property.

3. The Stolls represent that after they were advised by the Employer's accountant that the Lease may constitute a prohibited transaction under the Act, they met with legal counsel in December 1995 to discuss the alternatives available to address the issue. The Stolls determined that the Lease should be terminated and that the Plan should liquidate the Property. The Stolls are proposing to purchase the Property from the Plan and are requesting an exemption for the purchase transaction under the terms and conditions described herein.

4. The Stolls propose to purchase the Property from the Plan for the greater of (a) the Property's fair market value as of the sale date, or (b) the purchase price originally paid by the Plan. The Property was appraised for its fair market value by C. Kevin Bokoske, a professional real estate appraiser who determined that the Property had a fair market value of $55,000 as of January 26, 1996. Accordingly, the Stolls propose a purchase price of $57,500, which is the amount the Plan paid for the Property in 1993. The Employer will pay all expenses related to the transaction and the purchase price will be paid in cash. The Stolls represent that the sale transaction will be consummated as soon as possible after the publication in the Federal Register of a notice granting the exemption proposed herein, if granted. The Stolls represent that the commercial and industrial real estate market in which the Property is situated is very inactive and is described as a ''buyer's market'' in which purchasers are able to aggressively negotiate the price of the property. In the context of the depressed market, the Stolls represent that their willingness to pay a purchase price equal to the Plan's original investment, in excess of the fair market value, renders the proposed transaction more favorable to the Plan than the terms which the Plan could obtain from unrelated buyers.

5. The Stolls have agreed that if it is determined that the total of rental payments paid to the Plan under the Lease are less than the fair market rental value of the Property for the period of the Employer's occupancy, commensurate with the sale transaction the Stolls will remit to the Plan the difference between the fair market rent and the rent actually paid. An assessment of the Property's fair rental value has been conducted by the real estate appraisal firm of Aldieri Associates, Inc. (AAI), of Bristol, Connecticut. In a report dated June 25, 1996, AAI states that the Property had a fair market rental value of $10,000 per annum for 1994, 1995 and 1996. As a condition of the exemption proposed herein, the Stolls are required to pay the Plan the difference between the total rent actually paid through the sale date and the total rents due at the rate of $10,000 per annum.

6. The Department is not proposing exemptive relief for the Employer's lease of the Property from the Plan pursuant to the Lease. The Employer recognizes that the Employer's lease of the Property effective March 1, 1994 through the sale date constitutes a prohibited transaction under the Act and Code for which no exemptive relief is proposed herein. The Stolls represent that in January 1996 the Employer paid to the Internal Revenue Service (the Service) the excise taxes arising under section 4975(a) of the Code by reason of the Lease for the plan years ending June 30, 1994 and June 30, 1995. The Stolls have agreed that within 60 days of the

[1] The Department notes that the decisions to acquire and hold the Property are governed by the fiduciary responsibility requirements of Part 4, Subtitle B, Title I of the Act. In this regard, the Department herein is not proposing relief for any violations of Part 4 of the Act which may have arisen as a result of the acquisition and holding of the Property.

publication in the Federal Register of a notice granting the exemption proposed herein, the Employer will make final payment to the Service of any remaining unpaid excise taxes applicable under section 4975(a) of the Code by reason of Lease the through the date of the sale.

7. In summary, the applicants represent that the proposed transaction satisfies the criteria of section 408(a) of the Act for the following reasons: (a) The transaction will enable the termination of an ongoing prohibited transaction, the Lease; (b) the Plan will receive cash for the Property in the amount of no less than its original purchase price and no less than its fair market value as of the sale date; (c) the sale will be a one-time cash transaction and the Plan will incur no expenses related to the sale; (d) as part of the transaction, the Plan will receive the difference between the rents actually paid under the Lease and the rents due in accordance with the AAI appraisal; and (e) the Employer will be required to pay all excise taxes applicable under section 4975(a) of the Code with respect to the Lease which remain unpaid at the time of the sale transaction.

For Further Information Contact: Ronald Willett of the Department, telephone (202) 219–8881. (This is not a toll-free number.)

Pacific Mutual Life Insurance Company (PM), Located in Newport Beach, California

[Application No. D–10258]

Proposed Exemption

The Department is considering granting an exemption under the authority of section 408(a) of the Act and section 4975(c)(2) of the Code and in accordance with the procedures set forth in 29 CFR Part 2570, Subpart B (55 FR 32836, 32847, August 10, 1990). If the exemption is granted, the restrictions of section 406(a) of the Act and the sanctions resulting from the application of section 4975 of the Code, by reason of section 4975(c)(1) (A) through (D) of the Code, shall not apply to the sale to employee benefit plans (the Plans) of a synthetic guaranteed investment contract (the Buy/Hold Synthetic GIC) offered by PM, which is a party in interest with respect to the Plans, provided the following conditions are satisfied: (a) Prior to the execution of such Buy/Hold Synthetic GIC, an independent fiduciary of such Plan receives a full and detailed written disclosure of all material features of the Buy/Hold Synthetic GIC, including all applicable fees and charges; (b) following receipt of such disclosure, the Plan's independent fiduciary approves in writing the execution of the Buy/Hold Synthetic GIC on behalf of the Plan; (c) all fees and charges imposed under such Buy/Hold Synthetic GIC are reasonable; (d) each Buy/Hold Synthetic GIC will specifically provide for an objective means for determining the fair market value of the securities owned by the Plan pursuant to the Buy/Hold Synthetic GIC; (e) each Buy/Hold Synthetic GIC will specifically provide for an objective means for determining the interest rates to be credited periodically under the contract; (f) PM will maintain books and records of all transactions which will be subject to annual audit by independent certified public accountants selected by and responsible solely to the Plan; and (g) the Buy/Hold Synthetic GICs will only be marketed to Plans or collective investment funds which have at least $50 million in assets.

Effective Date: If the proposed exemption is granted, the exemption will be effective September 2, 1993.

Summary of Facts and Representations

1. PM is a mutual life insurance company incorporated under the laws of the State of California. PM is also a Registered Investment Adviser under the Investment Adviser's Act of 1940. PM is currently rated as follows: A.M. Best—A+; Standard & Poor's—AA+; Duff & Phelps—AA+; and Moody's—Aa3. As of December 31, 1995, PM had assets of approximately $18 billion and net policy reserves of approximately $10.8 billion. A significant portion of PM's business consists of writing insurance and annuity contracts, guaranteed investment contracts, and other types of funding agreements for numerous pension plans subject to the Act.

2. PM has requested the exemption proposed herein with respect to a ''Buy/Hold'' Synthetic GIC, which is a variation on traditional guaranteed investment contracts (GICs). PM's Buy/Hold Synthetic GIC will be marketed to Plans (including, without limitation, defined contribution plans). PM will negotiate the terms of the Buy/Hold Synthetic GIC with the appropriate fiduciary of such a Plan, which is generally expected to be the Plan's named fiduciary and not an independent investment professional.[2]

PM represents that the Buy/Hold Synthetic GIC provides purchasers with the advantages of a traditional GIC, while providing purchasers with greater security with respect to their investment than a traditional GIC. Under PM's Buy/Hold Synthetic GIC, each Plan retains legal title to all of its investments and has the benefit of a contract which guarantees that all employee initiated benefit payments and transfers will be paid at the Contract Value Record (see rep. 4, below).

3. Like traditional GICs, PM's duties and obligations with respect to the Buy/Hold Synthetic GIC are governed by the terms of an insurance contract (the Contract) between the Plan and PM. The Contract is issued pursuant to applicable state insurance law and is subject to the jurisdiction of the appropriate state Department of Insurance. While certain terms and conditions of each Contract will be negotiable by the Plan and PM, once the Contract has been executed PM will have no discretion over any of the terms. The Buy/Hold Synthetic GIC is issued by PM in the ordinary course of its business. PM represents that it will only market the Buy/Hold Synthetic GIC to Plans (or to collective investment funds established for the investment of assets of more than one Plan) which have at least $50 million in assets. The Buy/Hold Synthetic GIC is described in greater detail below.

4. Each Buy/Hold Synthetic GIC will consist of two components. One component is the underlying security or portfolio of investment assets (the Investment Assets), title to which will remain with the Plan. The underlying Investment Assets will primarily be high grade, fixed income securities, which will be selected and managed by a Plan fiduciary independent of PM. The value of the investment assets will be determined by objective standards. While the Investment Assets do not come under PM's administration or control, they affect the second component of each Contract, as will be discussed more fully below. The second component under each Buy/Hold Synthetic GIC will be an accounting record (the Contract Value Record or Book Value Record) established by PM to record the Plan's interest under the Synthetic GIC. This is the amount available to Plan participants in the event they elect to withdraw funds pursuant to provisions of the Plan. The Contract Value Record will initially be equal to the value of the Investment

[2] The Department notes that section 404(a)(1) of the Act requires, among other things, that a fiduciary of a plan must act prudently, solely in the interest of the plan's participants and beneficiaries, and for the exclusive purpose of providing benefits to participants and beneficiaries when making investment decisions on behalf of a plan. The Department notes that in order to act prudently in making investment decisions, plan fiduciaries must consider, among other factors, the availability, risks and potential return of alternative investments for the plan.

Assets at the inception of the Contract. Thereafter, the Contract Value Record will be credited with a rate of interest (the Credited Rate) that will be reset periodically (monthly, quarterly, semi-annually or annually) in accordance with an objective formula established under the Contract (see rep. 7, below). No element of the Credited Rate formula is within PM's discretion.

In addition, solely with respect to certain Contracts issued before August 11, 1995, PM has established a deposit account (the Deposit Account), consisting of certain cash contributions made to PM by the Plan under the terms of the Contract. The applicant represents that, under California law as in effect prior to August 11, 1995, a Deposit Account may have been required to have the Contract qualify as an insurance contract under the law of that State. The applicant further represents that after such date, a Deposit Account is no longer required under California law.

5. Under the Buy/Hold Synthetic GIC the Investment Assets will be a single security or a fixed portfolio of securities which will be established at the inception of the Contract and held until maturity.

6. The Buy/Hold Synthetic GIC will be supported by one or more specific fixed income securities that are bought in the primary or secondary market and held until the Contract matures. High quality mortgage-backed securities will be the primary security utilized, although other high quality securities may be used to support a Buy/Hold Synthetic GIC. Regardless of whether a mortgage-backed or other type of security is utilized, all Investment Assets will have predictable yield and cash flow characteristics. As principal and interest payments are made on the Investment Assets, such amounts will be made available to the Plans for reinvestment outside of the Buy/Hold Synthetic GIC at the direction of a fiduciary independent of PM. Investment Assets will be sold or otherwise distributed to the Plan only upon termination of the Contract or, under circumstances set forth in the Contract, to provide amounts for benefit payments due to Plan participants or for participant-directed transfers to other investments under the Plan.

7. PM represents that the attractive feature of the Buy/ Hold Synthetic GIC to a Plan is that PM assumes certain obligations with respect to the availability of funds for benefit withdrawals and transfers and the return realized from the Investment Assets. Mechanically, this is accomplished through the establishment of a Contract Value Record.

The Contract Value Record reflects a guarantee of principal and the Credited Rate, pursuant to the formula established in the Contract. The Credited Rate is equal to the projected internal rate of return [3] of the underlying Investment Assets and is guaranteed never to be below 0%. The Credited Rate of interest is reset periodically, so that it will at all times reflect the projected rate of return for the Investment Assets (determined without regard to any return from the reinvestment of dividends and other proceeds on such Investment Assets, which will be so reinvested outside the Buy/Hold Synthetic GIC). Each component of this formula will be set forth in the Contract and be explained to the independent fiduciary who decides whether to purchase the Buy/ Hold Synthetic GIC on behalf of any Plan. PM will have no discretion in setting this Credited Rate.

All participant initiated benefit payments and transfers are guaranteed to be paid at the Contract Value Record. The Contract Value Record will be reduced each month dollar for dollar for the benefit and transfer payments made to the Plan and for the amount of principal payments and coupon interest received by the Plan from the underlying Investment Assets. The Contract matures when the Contract Value Record is equal to 5% of its original balance. PM guarantees that the Plan will receive the greater of the Investment Assets or the Contract Value Record on the maturity date (see rep. 9, below). Since the Contract Value Record's Credited Rate will be equal to the underlying Investment Assets' projected internal rate of return, any difference between the value of the Investment Assets and the Contract Value Record should be insignificant on the maturity date. Thus, any payment PM will have to make to support the Contract Value Record should be negligible.

8. A Plan's fiduciary may also elect to terminate the Buy/Hold Synthetic GIC at any time. If the Plan's fiduciary terminates the Contract, the Plan will have complete control over the Investment Assets (i.e., they may be invested without any contractual constraints) and PM will have no further obligations with respect to the Contract Value Payment (see rep. 10, below). In the ordinary course, if the Contract is terminated within three years of its effective date, an early termination charge, intended to enable PM to recoup its costs and determined under a fixed objective formula to be set forth in the Contract, may apply.

9. Under the Buy/Hold Synthetic GIC, PM guarantees the availability of funds for participant initiated withdrawals up to the amount of the Contract Value Record balance as of any date. Neither PM, the Plan nor the Plan's fiduciaries will have any discretion over when a withdrawal may be made from the Contract. The Contract will not be accessed for withdrawals until other specified sources of funds (e.g., contributions to the Plan's fixed income fund under which the Buy/Hold Synthetic GIC is held, current investment income, maturing proceeds, and cash equivalents) have been depleted. If the Plan does make withdrawals from the Contract, they will be made from the following sources in the order listed until exhausted:

(a) Available cash attributable to the underlying Investment Assets including all cash flow available from the Investment Assets; and

(b) Cash realized from the sale of the Investment Assets. The percentage of the securities sold will be equal to the percentage the Contract Value Record is decreased to recognize the benefit payment. This means that if 10% of the Contract Value Record is to be accessed to meet a withdrawal, 10% of the Investment Assets will be sold.

A fiduciary of the Plan independent of PM will generally determine which of the Investment Assets will be sold, except that PM may require that the Plan sell the asset in the size category required to effect the withdrawal that has the highest ratio of market value to book value. If any Investment Assets have to be sold to effect any withdrawal, the Contract will specify that the value of the Investment Assets will be determined based upon the highest of three competitive bids for such Investment Assets received from parties independent of PM and the Plan. If the proceeds realized by the sale of the underlying securities are less than the portion of the Contract Value Record decreased to recognize the benefit payment, PM will make up the difference. If the proceeds to be realized by the sale of the underlying securities are greater than the portion of the Contract Value Record expected to be decreased to recognize the benefit payment, it is expected that the Plan's fiduciary would exercise its right to terminate the Contract and take full control over the Investment Assets. This

[3] The term ''internal rate of return'' means the rate of return on the Investment Assets determined without regard to any return from the reinvestment of dividends and other proceeds on such Investment Assets, which will be so reinvested outside the Buy/Hold Synthetic GIC.

is because, as the Buy/Hold Synthetic GIC is designed, the value of the Contract Value Record and the Investment Assets are supposed to be equal at maturity. If at any given point in time the value of the Investment Assets exceeds the value of the Contract Value Record, it would generally reflect an unanticipated increase in the market value of the underlying Investment Assets, the benefit of which could likely be lost if the Investment Assets were held to maturity. If the fiduciary does not terminate the Contract when the proceeds realized by the sale of the underlying securities are greater than the portion of the Contract Value Record decreased to recognize the benefit payment, the Plan will have to pay PM an additional fee equal to such difference. This additional fee is intended to protect PM from the additional risks associated with the sale of assets with superior performance, while underperforming assets are left subject to PM's obligation to make a Contract Value Payment (see rep. 10, below).

10. Upon maturation of the Contract, the value of the Investment Assets will be determined by taking the highest of at least three competitive bids from unrelated third parties. If the Contract Value Record exceeds the value of the Investment Assets at the time the Contract matures, PM will make a one-time payment to the Plan equal to such excess (the Contract Value Payment). Any Contract Value Payment will be paid from PM's General Account. If the value of the Investment Assets equals or exceeds the Contract Value Record, no Contract Value Payment will be made, and such excess belongs exclusively to the Plan.

As and when such Investment Assets mature, the Plan's fiduciaries will reinvest the proceeds of the Investment Assets as they see fit (outside the Buy/Hold Synthetic GIC Contract). Accordingly, the value of the Investment Assets will decline over time as dividends, interest and other proceeds are paid out on the Investment Assets. The Contract Value Record will be correspondingly reduced as amounts are distributed from the arrangement. By reason of these distributions, it is expected that the Contract Value Record will decrease significantly from its initial value by the time the Contract matures. Given this reduction in the Contract Value Record and the fact that the Contract Value Record's Credited Rate is calculated based upon the expected return of the Investment Assets, any Contract Value Payment at maturity should be de minimis.

11. PM represents that it believes that the Synthetic GIC is superior to traditional GICs in that each Buy/Hold Synthetic GIC serves the dual functions of: (a) affording a Plan substantially greater protection against the risk that it will lose its investment; and (b) providing the Plan with an opportunity for a greater rate of return than a traditional GIC. PM represents that it guarantees that all participant initiated benefit payments and transfers will be paid at the Contract Value Record. This means that, despite fluctuations in the market value of the Investment Assets, each participant in the Plan is protected against any loss of principal by PM's contractual commitment.

The Investment Assets to be held under the Contract will be determined at the inception of the Contract. These Investment Assets will be disposed of only upon termination of the Contract or upon the occurrence of certain events specified in the Contract (see rep. 9, above). The Plan holds legal title to the Investment Assets. Subject to the Plan's obligations to pay PM's fees, any appreciation in value of the Investment Assets, as well as current interest and principal payments, belong to the Plan. The only risk to the Investment Assets posed by the financial condition of PM relates to the amount representing the excess, if any, of the balance on the Contract Value Record over the actual value of the Investment Assets. PM represents that the Buy/Hold Synthetic GIC provides greater security than a traditional GIC wherein a plan places a substantial amount of its assets at risk based on the credit worthiness of the issuer of the GIC.

12. PM will maintain full and complete records and books reflecting the various accounts maintained in accordance with the Buy/Hold Synthetic GICs. Upon written request from a Plan, PM will also make its records pertaining to the Synthetic GICs available during normal business hours for audit by independent certified public accountants hired by the Plan's fiduciary.

13. The applicant makes the following representations with respect to the valuation of assets under the Synthetic GICs. Under the Buy/Hold Synthetic GIC, the time at which the value of the Investment Assets is relevant to PM's obligations is at the time of any withdrawal, including upon termination of the entire arrangement. At such time, the value of the Investment Assets will be determined based upon the highest of three competitive bids for such Investment Assets received from an independent party (see rep. 10, above).

14. PM and the Plan's fiduciary will agree to an expense charge (determined at the inception of the Contract) payable to PM with respect to the Buy/Hold Synthetic GIC that will be stated as a fixed percentage of the average value of the Contract Value Record during the preceding calendar quarter. This charge covers four elements: (a) A benefit risk charge, (b) a maturity risk charge, (c) an expense charge and (d) a profit charge. The benefit risk charge is a fee for assuming the risk of loss associated with benefit responsive withdrawals. It will be developed on a Plan specific basis after a review of the Plan's benefit payment cash flow history and the structure of the Plan itself (i.e., the frequency at which withdrawals and investment transfers are permitted, and the structure of alternate investment opportunities). This charge may be supplemented under certain circumstances if the effect of certain withdrawals increases PM's potential exposure (see rep. 9, above). The maturity risk charge will be based on a review of the volatility of, and the guidelines for the investment of, the Investment Assets. The expense and profit charges will be assessed based on the expected expenses related to the arrangement and the payment to PM of a reasonable profit. The expense charge will be based on an annual rate to be determined by negotiations between PM and the Plan's fiduciary at the inception of the Contract, stated as a fixed percentage and multiplied by an average balance of the value of the Investment Assets determined pursuant to a fixed formula under the Contract. Such negotiated charge would remain in effect for the initial period until the maturity date agreed to by the Plan and PM, subject to PM's right to make changes to such charge upon 30 days' advance notice if and solely to the extent that there has been a material change to the provisions or administration of the Plan which adversely affects deposits or withdrawals, or another action by the Plan's sponsor which results in significant withdrawals (such as, but not limited to, plant closings, divestitures, a partial termination of the Plan, the implementation of an early retirement incentive program and the Plan sponsor's bankruptcy) from the Contract.

Based on its review of competitive practices, PM represents that the aggregate charges with respect to each of the Synthetic GICs are, and are expected to continue to be, comparable to the charges made by other Buy/Hold Synthetic GIC providers.

15. PM represents that to date, the Buy/Hold Synthetic GIC has been purchased by a number of Plans, with the first such purchase occurring as of September 2, 1993. PM has accordingly requested that the exemption proposed herein be made retroactive to that date. PM represents that it entered into the Buy/Hold Synthetic GICs with the good faith belief that the transactions involved therein were, to the extent they constituted prohibited transactions, exempted by Prohibited Transaction Exemption 84–24 (PTE 84–24, 49 FR 13208, April 3, 1984).[4] However, because PM is unable to conclude affirmatively that at all times from and after September 2, 1993, the Buy/Hold Synthetic GICs constituted insurance contracts within the meaning of PTE 84–24, PM has requested the exemption proposed herein.

16. In summary, the applicant represents that the subject transactions satisfy the criteria contained in section 408(a) of the Act because: (a) The decision to enter into a Buy/Hold Synthetic GIC will be made on behalf of a Plan by a fiduciary of the Plan who is independent of PM, after receipt of full and detailed disclosure of all material features of the Contract, including all applicable fees and charges; (b) following receipt of such disclosure, the Plan's independent fiduciary approves in writing the execution of the Buy/Hold Synthetic GIC on behalf of the Plan; (c) all fees and charges under the Buy/Hold Synthetic GICs are reasonable; (d) each Buy/Hold Synthetic GIC will specifically provide for an objective means for determining the fair market value of the securities owned by the Plan pursuant to the Buy/Hold Synthetic GIC; (e) PM will maintain books and records of all transactions which will be subject to annual audit by certified public accountants selected by and responsible solely to the Plan; and (f) the Buy/Hold Synthetic GICs will only be marketed to Plans or collective investment funds which have at least $50 million in assets.

For Further Information Contact: Gary H. Lefkowitz of the Department, telephone (202) 219–8881. (This is not a toll-free number.)

[4] In this proposed exemption, the Department expresses no opinion as to whether the subject transactions would be exempt under PTE 84–24.

Mei Technology Corporation 401(k) Plan (the Plan), Located in Lexington, MA

[Application No. D–10281]

Proposed Exemption

The Department is considering granting an exemption under the authority of section 408(a) of the Act and section 4975 (c)(2) of the Code and in accordance with the procedures set forth in 29 CFR Part 2570, Subpart B (55 FR 32836, 32847, August 10, 1990). If the exemption is granted the restrictions of sections 406(a) and 406(b)(1) and (b)(2) of the Act and the sanctions resulting from the application of section 4975 of the Code, by reason of sections 4975(c)(1) (A) through (E) of the Code shall not apply to the proposed cash sale (the Sale) of Guaranteed Annuity Contract No. GA–7192, Certificate Nos. 0001–0004 (collectively, the GAC), issued by Mutual Benefit Life Insurance Company (Mutual Benefit) located in Newark, New Jersey, by the Plan to Mei Technology Corporation (the Employer), the sponsor of the Plan and party in interest with respect to the Plan; provided that (1) the Sale is a one-time transaction for cash; (2) the Plan experiences no loss nor incurs any expenses from the Sale; and (3) the Plan receives as consideration from the Sale an amount, as expressed below in paragraph No. 5, that is equal to the total amount expended by the Plan when acquiring the GAC, less withdrawals and/or proceeds paid from the GAC, plus interest as described in paragraph 5 of this Notice of Proposed Exemption.

Summary of Facts and Representations

1. Mei Technology Corporation is a Massachusetts corporation having its principal offices in Lexington, Massachusetts. The Plan is a defined contribution profit sharing plan with individual accounts for the participants, which is intended to satisfy the qualification requirements of sections 401(a) and 401(k) of the Code. The Employer may make discretionary matching contributions and/or profit sharing contributions to the Plan. As of March 31, 1996, the estimated number of Plan participants and beneficiaries was 252. Forty-five participants may be effected by the requested exemption. As of January 4, 1996, total assets of the Plan equaled $3,751,431.97, with approximately 10% of total Plan assets as of that date invested in the Guaranteed Certificate Account (Guaranteed Account) under the GAC. The remaining 90% of Plan assets ($3,362,314.95) were invested in designated mutual funds offered under the Plan and in participant loans.

The Trustee of the Plan for all assets other than the GAC and participant loans is Scudder Trust Company of Boston Massachusetts. Those assets are invested in mutual funds available under the Plan at the participant's direction. Elaine B. Mei and Peng-Siu Mei, Office Manager and President of the Employer, are Trustees for the Nondesignated Investments Trust, which holds the GAC and participant loans.

2. The Nondesignated Investments Trust holds the GAC which was issued on or about April 12, 1987. The effective date of the GAC is October 1, 1987. For the period October 1987 through July 1991, participants could direct their 401(k) contributions into any of six investment accounts offered under the GAC. The Guaranteed Account is the subject of this exemption; all other amounts under the GAC have been withdrawn.

Amounts deposited to the Guaranteed Account were accumulated in an individual certificate; the certificate identified the portion of the Account covered by a particular Certificate Rider and interest rate. Contributions were made to Certificate No. 0001 of the Guaranteed Account from October 1, 1987 to September 30, 1988. In accordance with the terms of Certificate No. 0001, interest was to be credited at the rate of 7.05% per annum until its maturity on September 30, 1991, at which time assets were to be paid out to the Plan and made available for reinvestment in accordance with participants' instructions. For the period October, 1988 through 1991, deposits were made to Certificate Nos. 0002–0004 with the following terms: No. 002, deposit dates of October 1, 1988 through September 30, 1989, interest rate of 8.15% and maturity date of September 30, 1992; No. 003, deposit dates of October 1, 1989 through September 30, 1990, interest rate of 7.90% and maturity date of September 30, 1993; No. 004, deposit dates of October 1, 1990 through September 30, 1991 (actual deposits terminated by the Employer in July, 1991, see below), interest rate of 7.70% and maturity date of September 30, 1994.

3. On July 16, 1991, the Commissioner of Insurance for the State of New Jersey placed Mutual Benefit in conservatorship and rehabilitation, causing Mutual Benefit to suspend all payments on Mutual Benefit accounts,

including the GAC.[5] As a result of the proceedings, the assets of the Plan invested in the Guaranteed Account of the GAC were frozen. A Third Amended Plan of Rehabilitation (the Approved Rehabilitation Plan) was filed and approved by the Superior Court of New Jersey on January 28, 1994. Under the Approved Rehabilitation Plan, group annuity contracts were divided into various groups, those covered by a state guaranty association, those not covered by a state guaranty association, those covered by the New York State guaranty association and partially covered contracts.

In March 1994, the Employer was notified that the Plan's GAC was deemed to be not covered by a state guaranty association (Wrapped Contracts, see below). Wrapped Contracts are backed by a consortium of insurance companies, see below. In March 1994, the Nondesignated Investment Trustees were given the choice to ''opt in'' or ''opt out'' of the Approved Rehabilitation Plan. ''Opting in'' resulted in accepting a restructured contract subject to certain terms including: (a) distributions of the remaining Guaranteed Account from a Wrapped Contract are very restricted; ordinary distributions will be made in five annual installments beginning in the year 2000. However, the industry group which supports the Wrapped Contracts has the right to delay any of these installment payments for a period of seven years if there are liquidity problems; and (b) investment return provisions were modified so that the Wrapped Contracts will be credited with the contract rate of interest through 1991; 4% in 1992, 3.5% in 1993- 94 and 3.55% in 1995. After 1994 no minimum rate of interest is guaranteed; interest is determined by formula each year based on the investment performance of the MBL Life Assurance Corporation (MBLLAC).[6] MBLLAC has determined that the 1996 rate will be 5.25%.

''Opting out'' would have resulted in a payment of 55% of the GAC's value based on its original terms, with a payment to be made over a period of up to 27 months. After evaluating the two options the Trustees chose the ''opt in'' election on behalf of the Plan.

4. The value of the GAC as of March 31, 1996 was $396,803.62, as determined by MBLLAC. This amount represents the principal amounts deposited pursuant to Certificates 0001–0004, less withdrawals and/or proceeds paid from the account, plus (i) the interest that accrued under the Certificates to December 31, 1991, and (ii) the interest that had accrued until March 31, 1996 at the Approved Rehabilitation Plan rates stated above.

The applicant represents that it desires to enter into the proposed transaction in order to protect the participants in the Plan from the risks of investment loss associated with the GAC. Further, the applicant represents that the Plan needs to sell its interest in the GAC in order to give participants more investment flexibility to direct the investments of the respective account balances to other investments. In addition, the applicant represents that the sale will allow participants to be able to exercise all of their rights under the Plan to request distributions, loans, withdrawals and investment transfers, with respect to amounts currently invested in the GAC which are not liquid.

5. In order to eliminate the risk associated with the continued investment in the GAC and to allow the Plan to distribute or otherwise invest assets currently invested in the GAC, the Employer proposes to purchase the GAC from the Plan for cash in an amount equal to its book value on the date of the Sale, as specified in the Rehabilitation Plan (i.e., the principal amounts deposited pursuant to Certificates 0001–0004, less withdrawals and/or proceeds paid from the account, plus: (i) the interest that accrued under the Certificates to December 31, 1991, and (ii) the interest that has accrued until the date of the Sale at the Approved Rehabilitation Plan rates stated in paragraph 3 above). The applicant represents that the elimination of the risks inherent in the GAC investment would be in the best interest of the Plan and its participants and would serve to protect their rights under the Plan. The Plan will incur no expense nor loss from the proposed transaction.

6. In summary, the applicant represents that the proposed transaction will satisfy the criteria for an exemption under section 408(a) of the Act for the following reasons: (a) the Plan will receive cash in a one-time transaction for the Mutual Benefit GAC, in an amount equal to the book value, as specified in paragraph 5; (b) the proposed Sale will enable the Plan and its participants and beneficiaries to avoid any risk that would be associated with the continued holding of the GAC, and will permit the directing of assets to safer investments; (c) the Plan will not incur any expenses with respect to the proposed transaction; and (d) the Nondesignated Investments Trustees have determined that the proposed transaction is in the best interest of the Plan and its participants and would serve to protect their rights under the Plan.

For Further Information Contact: Ms. Marianne H. Cole of the Department, telephone (202) 219–8881. (This is not a toll-free number.)

General Information

The attention of interested persons is directed to the following:

(1) The fact that a transaction is the subject of an exemption under section 408(a) of the Act and/or section 4975(c)(2) of the Code does not relieve a fiduciary or other party in interest of disqualified person from certain other provisions of the Act and/or the Code, including any prohibited transaction provisions to which the exemption does not apply and the general fiduciary responsibility provisions of section 404 of the Act, which among other things require a fiduciary to discharge his duties respecting the plan solely in the interest of the participants and beneficiaries of the plan and in a prudent fashion in accordance with section 404(a)(1)(b) of the Act; nor does it affect the requirement of section 401(a) of the Code that the plan must operate for the exclusive benefit of the employees of the employer maintaining the plan and their beneficiaries;

(2) Before an exemption may be granted under section 408(a) of the Act and/or section 4975(c)(2) of the Code, the Department must find that the exemption is administratively feasible, in the interests of the plan and of its participants and beneficiaries and protective of the rights of participants and beneficiaries of the plan;

(3) The proposed exemptions, if granted, will be supplemental to, and not in derogation of, any other provisions of the Act and/or the Code, including statutory or administrative exemptions and transitional rules. Furthermore, the fact that a transaction is subject to an administrative or statutory exemption is not dispositive of whether the transaction is in fact a prohibited transaction; and

(4) The proposed exemptions, if granted, will be subject to the express condition that the material facts and representations contained in each application are true and complete and accurately describe all material terms of

[5] The Department notes that the decision by the named fiduciaries to offer the GAC as an investment vehicle is governed by the fiduciary responsibility requirements of Part 4, Subtitle B, Title I of the Act. The Department is not proposing relief herein for any violations of Part 4 of the Act which may have arisen as a result of the acquisition and holding by the Plan of the GAC issued by Mutual Benefit.

[6] MBLLAC was incorporated as part of the Rehabilitation Plan; subsequently substantially all of Mutual Benefit Life Insurance Company's asset base was transferred to MBLLAC.

the transaction which is the subject of the exemption. In the case of continuing exemption transactions, if any of the material facts or representations described in the application change after the exemption is granted, the exemption will cease to apply as of the date of such change. In the event of any such change, application for a new exemption may be made to the Department.

Signed at Washington, DC, this 17 day of July, 1996.

Ivan Strasfeld,

Director of Exemption Determinations, Pension and Welfare Benefits Administration, U.S. Department of Labor.

[FR Doc. 96–18540 Filed 7–19–96; 8:45 am]

BILLING CODE 4510–29–P

[Prohibited Transaction Exemption 96–54; Exemption Application No. D–09334, et al.]

Grant of Individual Exemptions; Wells Fargo Bank, N.A. (the Bank), et al.

AGENCY: Pension and Welfare Benefits Administration, Labor.

ACTION: Grant of individual exemptions.

SUMMARY: This document contains exemptions issued by the Department of Labor (the Department) from certain of the prohibited transaction restrictions of the Employee Retirement Income Security Act of 1974 (the Act) and/or the Internal Revenue Code of 1986 (the Code).

Notices were published in the Federal Register of the pendency before the Department of proposals to grant such exemptions. The notices set forth a summary of facts and representations contained in each application for exemption and referred interested persons to the respective applications for a complete statement of the facts and representations. The applications have been available for public inspection at the Department in Washington, DC. The notices also invited interested persons to submit comments on the requested exemptions to the Department. In addition the notices stated that any interested person might submit a written request that a public hearing be held (where appropriate). The applicants have represented that they have complied with the requirements of the notification to interested persons. No public comments and no requests for a hearing, unless otherwise stated, were received by the Department.

The notices of proposed exemption were issued and the exemptions are being granted solely by the Department because, effective December 31, 1978, section 102 of Reorganization Plan No. 4 of 1978 (43 FR 47713, October 17, 1978) transferred the authority of the Secretary of the Treasury to issue exemptions of the type proposed to the Secretary of Labor.

Statutory Findings

In accordance with section 408(a) of the Act and/or section 4975(c)(2) of the Code and the procedures set forth in 29 CFR Part 2570, Subpart B (55 FR 32836, 32847, August 10, 1990) and based upon the entire record, the Department makes the following findings:

(a) The exemptions are administratively feasible;

(b) They are in the interests of the plans and their participants and beneficiaries; and

(c) They are protective of the rights of the participants and beneficiaries of the plans.

Wells Fargo Bank, N.A. (the Bank) Located in San Francisco, CA [Prohibited Transaction Exemption 96–54; Exemption Application No. D–09334]

Exemption

Section I. Exemption for the In-Kind Transfer of Assets

The restrictions of sections 406(a) and 406(b) of the Act and the sanctions resulting from the application of section 4975 of the Code, by reason of section 4975(c) of the Code, shall not apply, effective July 2, 1993 until October 1, 1993, to the in-kind transfer of all or a *pro rata* portion of the assets of employee benefit plans (the Plans) that are held in certain collective investment funds (the CIF or CIFs), for which the Bank or any of its affiliates (collectively, Wells Fargo) serves as fiduciary, to the Stagecoach Funds, Inc. (the Fund or Funds), an open-end investment company registered under the Investment Company Act of 1940 (the '40 Act), as amended, for which Wells Fargo acts as investment adviser and may provide other services, in exchange for shares of the Funds (the CIF Exchanges), in connection with the partial termination of the CIFs.

This exemption is subject to the following conditions and the general conditions of Section II:

(a) The CIF Exchange is a one-time transaction between the Plan and the respective Fund.

(b) No sales commissions or other fees are paid by the Plans in connection with the CIF Exchanges and no redemption fees are paid by the Plan in connection with the sale by the Plan of shares acquired in a CIF Exchange.

(c) A fiduciary of each Plan who is independent of and unrelated to Wells Fargo (the Second Fiduciary) receives advance written notice of the CIF Exchange and full written disclosure of information concerning the Funds which includes, but is not limited to the following:

(1) A current prospectus for each Fund in which the Plan is considering investing;

(2) A statement describing the fees for investment advisory or similar services, any secondary services (the Secondary Services) as referred to in paragraph (h) of Section III, and all other fees to be charged to, or paid by, the Plan (and by such Fund) to Wells Fargo, including the nature and extent of any differential between the rates of the fees;

(3) The reasons why Wells Fargo considers an investment in the Fund to be appropriate for the Plan; and

(4) A statement describing whether there are any limitations applicable to Wells Fargo with respect to which assets of a Plan may be invested in a Fund, and, if so, the nature of such limitations.

(d) On the basis of the foregoing information, the Second Fiduciary approves, in writing, the CIF Exchange.

(e) Each Plan receives shares of the Funds which have a total net asset value equal to the value of all or the Plan's *pro rata* share of the Plan's assets invested in the CIF on the date of the transfer, based on the current market value of the CIF's assets, as objectively determined in a single valuation, performed in the same manner at the close of the same business day by a principal pricing service (the Principal Pricing Service), disclosed previously by Wells Fargo to the Second Fiduciary, and/or as applicable, by the amortized cost method.

(f) The terms of the transaction are no less favorable to each Plan than those obtainable in an arm's length transaction with an unrelated party.

(g) Wells Fargo sends by regular mail to each affected Plan a written confirmation, not more than 7 days after the completion of the transaction, containing the date of the transaction, the number of shares acquired by the Plan in each of the Funds, the price paid per share for the shares in each of the Funds and the total dollar amount involved in the transaction with each Fund.

(h) As to each Plan, the combined total of all fees received by Wells Fargo for the provision of services to such Plan, and in connection with the provision of services to any of the Funds in which the Plan may invest, is not in excess of ''reasonable compensation'' within the meaning of section 408(b)(2) of the Act.

(i) Wells Fargo does not receive any fees payable pursuant to Rule 12b–1 of

the '40 Act in connection with the transactions involving the Funds.

(j) The Plans are not sponsored or maintained by Wells Fargo.

(k) Wells Fargo provides the Second Fiduciary of such Plan with—

(l) A copy of the proposed exemption and/or the final exemption, if granted;

(2) A copy of an updated prospectus of such Fund, at least annually;

(3) A report or statement (which may take the form of the most recent financial report, the current statement of additional Information, or some other written statement) which contains a description of all fees paid by the Fund to Wells Fargo, upon the request of the Second Fiduciary; and

(4) A statement specifying—

(A) The total, expressed in dollars, of brokerage commissions that are paid to Wells Fargo by such Fund;

(B) The total, expressed in dollars, of brokerage commissions that are paid by such Fund to brokerage firms unrelated to Wells Fargo;

(C) The average brokerage commissions per share, expressed as cents per share, paid to Wells Fargo by such Fund; and

(D) The average brokerage commissions per share, expressed as cents per share, paid by such Fund to brokerage firms unrelated to Wells Fargo. (Such statement will be provided at least annually with respect to each of the Funds in which a Plan invests in the event a Fund places brokerage transactions with Wells Fargo.)

(l) All dealings between the Plans and the Funds are on a basis no less favorable to the Plans than dealings with other shareholders of the Funds.

Section II. General Conditions

(a) Wells Fargo maintains for a period of six years the records necessary to enable the persons described below in paragraph (b) of Section II to determine whether the conditions of this exemption have been met, except that (1) a prohibited transaction will not be considered to have occurred if, due to circumstances beyond the control of Wells Fargo, the records are lost or destroyed prior to the end of the six-year period, and (2) no party in interest, other than Wells Fargo shall be subject to the civil penalty that may be assessed under section 502(i) of the Act or the taxes imposed by section 4975 (a) and (b) of the Code if the records are not maintained or are not available for examination as required by paragraph (b) below; and

(b)(1) Except as provided in paragraph (b)(2) and notwithstanding any provisions of section 504 (a)(2) and (b) of the Act, the records referred to in paragraph (a) are unconditionally available at their customary location for examination during normal business hours by—

(A) Any duly authorized employee or representative of the Department or the Internal Revenue Service,

(B) Any fiduciary of the Plans who has authority to acquire or dispose of shares of the Funds owned by the Plans, or any duly authorized employee or representative of such fiduciary, and

(C) Any participant or beneficiary of the Plans or duly authorized employee or representative of such participant or beneficiary;

(2) None of the persons described in paragraph (b)(1)(B) and (C) shall be authorized to examine trade secrets of Wells Fargo, or commercial or financial information which is privileged or confidential.

Section III. Definitions

For purposes of this exemption,

(a) The term ''Wells Fargo'' means Wells Fargo Bank, N.A. and any affiliate of Wells Fargo Bank, N.A., as defined in paragraph (b) of this Section VI.

(b) An ''affiliate'' of Wells Fargo includes—

(1) Any person directly or indirectly through one or more intermediaries, controlling, controlled by, or under common control with Wells Fargo;

(2) Any officer, director, employee, relative, or partner in any such person; and

(3) Any corporation or partnership of which such person is an officer, director, partner, or employee;

(c) The term ''control'' means the power to exercise a controlling influence over the management or policies of a person other than an individual.

(d) The term ''relative'' means a ''relative'' as that term is defined in section 3(15) of the Act (or a ''member of the family'' as that term is defined in section 4975(e)(6) of the Code), or a brother, a sister, or a spouse of a brother or a sister.

(e) The term ''Second Fiduciary'' means a fiduciary of a Plan who is independent of and unrelated to Wells Fargo. For purposes of this exemption, the Second Fiduciary will not be deemed to be independent of and unrelated to Wells Fargo if—

(1) Such Second Fiduciary directly or indirectly controls, is controlled by, or is under common control with Wells Fargo;

(2) Such Second Fiduciary, or any officer, director, partner, employee, or relative of such Second Fiduciary is an officer, director, partner, or employee of Wells Fargo (or is a relative of such persons);

(3) Such Second Fiduciary directly or indirectly receives any compensation or other consideration for his or her own personal account in connection with any transaction described in this proposed exemption.

If an officer, director, partner, or employee of Wells Fargo (or a relative of such persons), is a director of such Second Fiduciary, and if he or she abstains from participation in the choice of the Plan's investment manager/adviser, the approval of any purchase or sale by the Plan of shares of the Funds, and the approval of any change of fees charged to or paid by the Plan, in connection with any of the transactions described in Section I above, then paragraph (e)(2) of this Section III, shall not apply.

(f) The term ''Fund or Funds'' means a diversified open-end investment company or companies registered under the '40 Act for which Wells Fargo serves as investment adviser and may also provide Secondary Services as approved by such Fund. The Funds are limited to six investment Fund portfolios of the Stagecoach Funds, Inc. These Fund portfolios include include the Asset Allocation Fund, the Bond Index Fund, the Growth Stock Fund, the Short-Intermediate Term Fund, the S&P 500 Stock Fund and the U.S. Treasury Allocation Fund.

(g) The term ''net asset value'' means the amount for purposes of pricing all purchases and sales of shares in a Fund calculated by dividing the value of all securities, determined by a method as set forth in a Fund's prospectus and statement of additional information, and other assets belonging to such Fund, less the liabilities charged to the Fund, by the number of outstanding shares in such Fund.

(h) The term ''Secondary Service'' means a service other than an investment management, investment advisory or similar service which is provided by Wells Fargo to the Funds. However, for purposes of this exemption, Secondary Services will include only brokerage services provided to the Funds by Wells Fargo for the execution of securities transactions engaged in by the Funds.

(i) The term ''Principal Pricing Service'' means an independent, recognized pricing service that has determined the aggregate dollar value of marketable securities involved in a CIF Exchange. Prior to the CIF Exchange, the Principal Pricing Service was disclosed in writing by Wells Fargo to the Second Fiduciary.

EFFECTIVE DATE: This exemption is effective from July 2, 1993 until October

1, 1993 with respect to CIF Exchanges that occurred on July 2, August 19, and October 1, 1993.

For a more complete statement of the facts and representations supporting the Department's decision to grant this exemption, refer to the notice of proposed exemption published on April 4, 1996 at 61 FR 15123.

Written Comments

The Department received one written comment with respect to the notice of proposed exemption and no requests for a public hearing. The comment, which was submitted by Wells Fargo, concerned notification of interested persons. In this regard, Wells Fargo represented that notice of the proposed exemption was originally sent to its client Plans on April 24, 1996. However, because the notice was incomplete, Wells Fargo explained that it renotified these Plans of the proposed exemption on May 24, 1996 and extended the comment period until June 24, 1996.

In addition, Wells Fargo stated that client Plans of BZW Barclays Global Investors, N.A. were properly notified of the proposed exemption. Therefore, there were no further extensions of the comment period with respect to such Plans.

Thus, after giving full consideration to the entire record, the Department has decided to grant the subject exemption. Wells Fargo's comment letter has been included as part of the public record of the exemption application. The complete application file, including all supplemental submissions received by the Department, is made available for public inspection in the Public Documents Room of the Pension and Welfare Benefits Administration, Room N–5638, U.S. Department of Labor, 200 Constitution Avenue, NW., Washington, DC 20210.

FOR FURTHER INFORMATION CONTACT: Ms. Jan D. Broady of the Department, telephone (202) 219–8881. (This is not a toll-free number.)

Aircon Energy, Inc. 401(k) Profit Sharing Plan (the Plan) Located in Sacramento, California

[Prohibited Transaction Exemption 96–55; Exemption Application No. D–10073]

Exemption

The restrictions of sections 406(a), 406(b)(1) and (b)(2) of the Act and the sanctions resulting from the application of section 4975 of the Code, by reason of section 4975(c)(1) (A) through (E) of the Code, shall not apply to the sale by the Plan of certain office equipment (the Workstations) to Aircon Energy, Inc. (Aircon), a party in interest with respect to the Plan, provided that the following conditions are satisfied: (1) the sale is a one-time transaction for cash; (2) the Plan pays no commissions nor any other expenses relating to the sale; (3) the purchase price is the greater of: (a) the fair market value of the Workstations as determined by a qualified, independent appraiser, or (b) the Plan's initial acquisition cost plus opportunity costs attributable to the Workstations while in storage; (4) contemporaneously with the sale, Aircon reimburses the Plan for the fair market rental value with respect to the prohibited use of certain of the Workstations; (5) contemporaneously with the sale, Aircon reimburses the Plan for losses and opportunity costs associated with the prior sale of certain of the Workstations to an unrelated third party; and (6) within 90 days of the publication in the Federal Register of the grant of this exemption, Aircon files Form 5330 with the Internal Revenue Service (the Service) and pays all applicable additional excise taxes that are due by reason of the prohibited use transactions.

The Department has determined to clarify Conditions 4 and 5 and has modified the language in this exemption accordingly.

For a more complete statement of the facts and representations supporting the Department's decision to grant this exemption, refer to the notice of proposed exemption published on January 31, 1996 at 61 FR 3476.

FOR FURTHER INFORMATION CONTACT: Karin Weng of the Department, telephone (202) 219–8881. (This is not a toll-free number.)

Smith Barney, Located in New York, New York

[Prohibited Transaction Exemption 96–56; Exemption Application No. D–10126]

Exemption

The restrictions of section 406(a) of the Act and the sanctions resulting from the application of section 4975 of the Code, by reason of section 4975(c)(1) (A) through (D) of the Code, shall not apply to the lending of securities, under certain ''exclusive borrowing'' arrangements, to Smith Barney, and to any affiliate of Smith Barney who is a U.S. registered broker-dealer or a government securities broker or dealer (Affiliates; collectively Smith Barney), by employee benefit plans (Plans) with respect to which Smith Barney is a party in interest, provided that the following conditions are satisfied:

(a) For each Plan, neither Smith Barney nor its Affiliates has discretionary authority or control over the Plan's investment in the securities available for loan, nor do they render investment advice (within the meaning of 29 CFR 2510.3–21(c)) with respect to those assets;

(b) Smith Barney directly negotiates an exclusive borrowing agreement (Borrowing Agreement) with a Plan fiduciary which is independent of Smith Barney;

(c) In exchange for granting Smith Barney the exclusive right to borrow certain securities, the Plan either (i) receives a reasonable fee, which is specified in the Borrowing Agreement for each category of securities available for loan and is a flat fee, a set percentage rate, or a percentage rate established by reference to an objective formula, or (ii) has the opportunity to derive compensation through the investment of cash collateral posted by Smith Barney;

(d) Any change in the rate that Smith Barney pays to the Plan with respect to any securities loan requires the prior written consent of the independent fiduciary, except that consent is presumed where the rate changes pursuant to an objective formula specified in the Borrowing Agreement and the independent fiduciary is notified at least 24 hours in advance of such change and does not object in writing thereto, prior to the effective time of such change;

(e) On or before the day the loaned securities are delivered, the Plan receives from Smith Barney (by physical delivery, book entry in a securities depository, wire transfer, or similar means) collateral consisting of cash, securities issued or guaranteed by the U.S. Government or its agencies, irrevocable bank letters of credit issued by persons other than Smith Barney or its Affiliates, or other collateral permitted under PTCE 81–6, as it may be amended or superseded; [1]

(f) The market value of the collateral initially equals at least 102 percent of the market value of the loaned securities and, if the market value of the collateral at any time falls below 100 percent, Smith Barney delivers additional collateral on the following day to bring the level of the collateral back to 102 percent;

(g) Before entering into a Borrowing Agreement, Smith Barney furnishes to the Plan the most recent publicly available audited and unaudited statements of its financial condition, as

[1] PTCE 81–6 (46 FR 7527, January 23, 1981, as amended at 52 FR 18754, May 19, 1987) provides an exemption under certain conditions from section 406(a)(1) (A) through (D) of the Act and the corresponding provisions of section 4975(c) of the Code for the lending of securities that are assets of an employee benefit plan to certain broker-dealers or banks which are parties in interest.

well as any publicly available information which it believes is necessary for the independent fiduciary to determine whether the Plan should enter into or renew the Borrowing Agreement;

(h) The Borrowing Agreement contains a representation by Smith Barney that as of each time it borrows securities, there has been no material adverse change in its financial condition since the date of the most recently furnished financial statements;

(i) The Plan receives the equivalent of all distributions made during the loan period, including, but not limited to, cash dividends, interest payments, shares of stock as a result of stock splits, and rights to purchase additional securities, that the Plan would have received (net of tax withholdings)[2] had it remained the record owner of the securities;

(j) The Borrowing Agreement and/or any securities loan outstanding may be terminated by either party at any time without penalty, whereupon Smith Barney returns any borrowed securities (or the equivalent thereof in the event of reorganization, recapitalization, or merger of the issuer of the borrowed securities) to the Plan within five business days of written notice of termination;

(k) In the event that Smith Barney fails to return the borrowed securities, Smith Barney indemnifies the Plan with respect to the difference, if any, between the replacement cost of the borrowed securities and the market value of the collateral on the date the loan is declared in default, together with expenses not covered by the collateral plus applicable interest at a reasonable rate;

(l) All procedures regarding the securities lending activities, at a minimum, conform to the applicable provisions of PTCE 81–6, as it may be amended or superseded;

(m) Only Plans, which together with related Plans,[3] having assets with an aggregate market value in excess of $50 million may lend securities to Smith Barney under an exclusive borrowing arrangement; and

(n) Prior to any Plan's approval of the lending of its securities to Smith Barney, a copy of this exemption, if granted (and the notice of pendency) are provided to the Plan, and Smith Barney informs the independent fiduciary that Smith Barney is not acting as a fiduciary of the Plan in connection with its borrowing securities from the Plan.[4]

EFFECTIVE DATE: The exemption is effective as of September 25, 1995.

For a more complete statement of the facts and representations supporting the Department's decision to grant this exemption, refer to the notice of proposed exemption published on May 23, 1996 at 61 FR 25905.

FOR FURTHER INFORMATION CONTACT: Ms. Karin Weng of the Department, telephone (202) 219–8881. (This is not a toll-free number.)

VVP America, Inc. Incentive Savings Plan (the Plan) Located in Memphis, Tennessee

[Prohibited Transaction Exemption 96–57; Exemption Application No. D–10141]

Exemption

The restrictions of sections 406(a), 406 (b)(1) and (b)(2) of the Act and the sanctions resulting from the application of section 4975 of the Code, by reason of section 4975(c)(1) (A) through (E) of the Code, shall not apply to the sales by the Plan to VVP America, Inc., the sponsor of the Plan, of universal life insurance policies (the Policies) issued by the Confederation Life Insurance Company; provided that the following conditions are satisfied:

(A) All terms and conditions of the transactions are at least as favorable to the Plan as those which the Plan could obtain in arm's-length transactions with unrelated parties;

(B) The Plan receives cash purchase prices for the Policies of no less than the greater of (1) the fair market value of each Policy as of the sale date, or

(2) each Policy's cash surrender value (as described in the Notice of Proposed Exemption) as of the sale date; and

(C) The Plan does not incur any expenses or suffer any loss with respect to the transactions.

For a more complete statement of the facts and representations supporting this exemption, refer to the notice of proposed exemption published on May 23, 1996 at 61 FR 25907.

FOR FURTHER INFORMATION CONTACT: Ronald Willett of the Department, telephone (202) 219–8881. (This is not a toll-free number.)

Fieldcrest Cannon, Inc. Retirement Savings Plan for Salaried Employees, and Fieldcrest Cannon, Inc. Retirement Savings Plan for Hourly Employees (the Plans) Located in Eden, North Carolina

[Prohibited Transaction Exemption 96–58; Exemption Application Nos. D–10180 & D–10181]

Exemption

The restrictions of sections 406(a), 406 (b)(1) and (b)(2) of the Act and the sanctions resulting from the application of section 4975 of the Code, by reason of section 4975(c)(1) (A) through (E) of the Code, shall not apply to (1) the guaranty (the Guaranty) by Fieldcrest Cannon, Inc. (the Employer), the sponsor of the Plans, of amounts due the Plans with respect to three guaranteed investment contracts (the GICs) issued by Confederation Life Insurance Company (Confederation); (2) the potential extensions of credit (the Advances) to the Plans by the Employer pursuant to the Guaranty; (3) the Plans' potential repayment of the Advances; and (4) the potential purchase of the GICs from the Plans by the Employer for cash; provided the following conditions are satisfied:

(A) All terms and conditions of such transactions are no less favorable to the Plans than those which the Plans could obtain in arm's-length transactions with unrelated parties;

(B) No interest and/or expenses are paid by the Plans in connection with the transactions;

(C) The proceeds of the Advances are used solely in lieu of payments due from Confederation with respect to the GICs;

(D) Repayment of the Advances will be restricted to the GIC Proceeds, defined as the cash proceeds obtained by the Plans from or on behalf of Confederation with respect to the GICs;

(E) Repayment of the Advances will be waived to the extent that the Advances exceed the GIC Proceeds; and

(F) In any sale of a GIC to the Employer, the Plans will receive a purchase price which is no less than the fair market value of the GIC as of the sale date, and no less than the GIC's ''Book Value'' as defined in the Notice of Proposed Exemption, plus post-maturity interest, if applicable, at the FIF Rate as defined in the Notice of Proposed Exemption, less any Advances made pursuant to this exemption and any GIC Proceeds received with respect to the GIC, as of the sale date.

For a more complete statement of the facts and representations supporting

[2] The Department notes the applicant's representation that dividends and other distributions on foreign securities payable to a lending Plan are subject to foreign tax withholdings and that Smith Barney will always put the Plan back in at least as good a position as it would have been in had it not loaned the securities.

[3] The Department notes the applicant's representation that the term ''related Plans'' refers to plans within the jurisdiction of Title I of the Act that are maintained by an entity or its affiliates, as ''affiliate'' is defined in section 407(d)(7) of the Act.

[4] The Department notes the applicant's representation that, under the proposed exclusive borrowing arrangements, Smith Barney will not perform the functions of a securities lending agent, nor will Smith Barney perform any services ancillary to securities lending, such as monitoring the level of collateral and the value of the loaned securities.

this exemption, refer to the notice of proposed exemption published on May 6, 1996 at 61 FR 20281.

FOR FURTHER INFORMATION CONTACT: Ronald Willett of the Department, telephone (202) 219–8881. (This is not a toll-free number.)

General Information

The attention of interested persons is directed to the following:

(1) The fact that a transaction is the subject of an exemption under section 408(a) of the Act and/or section 4975(c)(2) of the Code does not relieve a fiduciary or other party in interest or disqualified person from certain other provisions to which the exemption does not apply and the general fiduciary responsibility provisions of section 404 of the Act, which among other things require a fiduciary to discharge his duties respecting the plan solely in the interest of the participants and beneficiaries of the plan and in a prudent fashion in accordance with section 404(a)(1)(B) of the Act; nor does it affect the requirement of section 401(a) of the Code that the plan must operate for the exclusive benefit of the employees of the employer maintaining the plan and their beneficiaries;

(2) These exemptions are supplemental to and not in derogation of, any other provisions of the Act and/or the Code, including statutory or administrative exemptions and transactional rules. Furthermore, the fact that a transaction is subject to an administrative or statutory exemption is not dispositive of whether the transaction is in fact a prohibited transaction; and

(3) The availability of these exemptions is subject to the express condition that the material facts and representations contained in each application are true and complete and accurately describe all material terms of the transaction which is the subject of the exemption. In the case of continuing exemption transactions, if any of the material facts or representations described in the application change after the exemption is granted, the exemption will cease to apply as of the date of such change. In the event of any such change, application for a new exemption may be made to the Department.

Signed at Washington, D.C., this 17th day of July, 1996.

Ivan Strasfeld,

Director of Exemption Determinations, Pension and Welfare Benefits Administration, U.S. Department of Labor.

[FR Doc. 96–18539 Filed 7–19–96; 8:45 am]

BILLING CODE 4510–29–P

NATIONAL AERONAUTICS AND SPACE ADMINISTRATION

[Notice 96–078]

Notice of Prospective Patent License

AGENCY: National Aeronautics and Space Administration.

ACTION: Notice of Prospective Patent License.

SUMMARY: NASA hereby gives notice that SafetySCAN, LLC of Orchard Park, New York, has applied for an exclusive license to practice the invention described and claimed in a pending U.S. Patent, entitled ''Flame Imaging System'' SSC–00040, which is assigned to the United States of America as represented by the Administrator of the National Aeronautics and Space Administration. Written objections to the prospective grant of a license to SafetySCAN, LLC. should be sent to Beth Vrioni, John F. Kennedy Space Center, Mail Code: DE–TPO, Kennedy Space Center, FL 32899.

DATES: Responses to this Notice must be received on or before September 20, 1996. For further information contact: Beth Vrioni at (407) 867–2544.

Dated: July 10, 1996.

Edward A. Frankle,

General Counsel.

[FR Doc. 96–18517 Filed 7–19–96; 8:45 am]

BILLING CODE 7510–01–M

[Notice 96–079]

Notice of Prospective Patent License

AGENCY: National Aeronautics and Space Administration.

ACTION: Notice of Prospective Patent License.

SUMMARY: NASA hereby gives notice that Vanguard Space Corporation, of Los Angeles, California 90064, has applied for a partially exclusive license to practice the invention disclosed in NASA Case No. MSC–22745–1, entitled ''Method and Apparatus for Coupling Space Vehicles,'' for which a U.S. Patent Application was filed by the United States of America as represented by the Administrator of the National Aeronautics and Space Administration. Written objections to the prospective grant of a license should be sent to Mr. Hardie Barr, Patent Attorney, Johnson Space Center.

DATES: Responses to this notice must be received by (insert 60 days from the date of publication in the Federal Register).

FOR FURTHER INFORMATION CONTACT: Mr. Hardie Barr, Patent Attorney, Johnson Space Center, Mail Code HA, Houston, Texas; telephone (713) 483–1003; fax (713) 244–8452.

Dated: July 10, 1996.

Edward A. Frankle,

General Counsel.

[FR Doc. 96–18518 Filed 7–19–96; 8:45 am]

BILLING CODE 7510–01–M

NUCLEAR REGULATORY COMMISSION

[Docket No. 27–47]

Consideration of an Amendment Request to a License for Disposal of Low-Level Radioactive Waste Containing Special Nuclear Material by Chem-Nuclear Systems, Incorporated and an Opportunity for a Hearing

AGENCY: Nuclear Regulatory Commission.

SUMMARY: The Nuclear Regulatory Commission is considering an amendment request of License No. 12–13536–01. This license is issued to Chem-Nuclear Systems, Incorporated (CNSI) for the disposal of wastes containing special nuclear material (SNM) in the low-level radioactive waste disposal facility, located near Barnwell, South Carolina. NRC licenses this facility under 10 CFR Part 70. The South Carolina license was amended on August 11, 1995, to require disposal of Class A waste in concrete vaults, as well as improvements to the infiltration monitoring system and the enhanced engineering cap design. On October 10, 1995, CNSI submitted an amendment request to incorporate these changes of the South Carolina license into the NRC license.

FOR FURTHER INFORMATION CONTACT: Timothy E. Harris, Low-Level Waste and Decommissioning Projects Branch, Division of Waste Management, U.S. Nuclear Regulatory Commission, Washington, DC 20555–0001. Telephone: (301) 415–6613. Fax.: (301) 415–5398.

SUPPLEMENTARY INFORMATION:

Background

The LLW disposal facility located near Barnwell, South Carolina, is licensed by the State of South Carolina for disposal of source and byproduct material. The NRC license allows the disposal of SNM, and acknowledges the State-regulated activities constitute the major site activities. As a result, NRC relies extensively on the State's regulatory program to evaluate the facility and the licensee's capability to demonstrate reasonable assurance that the disposal of LLW can be

accomplished safely. To this end, NRC coordinates review and assessment of the licensee with the State of South Carolina, Department of Health and Environmental Control. To avoid duplicative effort, NRC has identified several areas in which it relies primarily on the State regulatory program. Areas distinct to SNM regulation are directly evaluated by NRC. Under the NRC license, several State-identified license conditions are referenced; this ensures that NRC is aware of significant licensee activities requiring State regulatory action. Additionally, NRC incorporates conditions in the SNM license which provide NRC the latitude to enforce the Agreement State license conditions, that is, if NRC determines that such action is necessary. Finally, the NRC license does not abrogate or diminish the authority of the State of South Carolina governed by its Agreement under section 274b of the Atomic Energy Act of 1954, as amended, with NRC, to regulate, inspect or otherwise exercise control of operations, with respect to source and byproduct material, for disposal of that material at the LLW disposal facility at Barnwell, South Carolina.

Prior to the issuance of the proposed amendment, NRC will have made findings required by the Atomic Energy Act of 1954, as amended, and NRC's regulations. These findings will be documented in a Safety Evaluation Report and an Environmental Assessment.

The NRC provides notice that this is a proceeding on an application for a license amendment falling within the scope of Subpart L, ''Informal Hearing Procedures for Adjudication in Materials Licensing Proceedings,'' of NRC's rules and practice for domestic licensing proceedings in 10 CFR Part 2. Pursuant to § 2.1205(a), any person whose interest may be affected by this proceeding may file a request for a hearing in accordance with § 2.1205(c). A request for a hearing must be filed within thirty (30) days of the date of publication of this Federal Register notice.

In addition to meeting other applicable requirements of 10 CFR Part 2 of the NRC's regulations, a request for a hearing filed by a person other than an applicant must describe in detail:

1. The interest of the requester in the proceeding;

2. How that interest may be affected by the results of the proceeding, including the reasons why the requester should be permitted a hearing, with particular reference to the factors set out in § 2.1205(g);

3. The requester's areas of concern about the licensing activity that is the subject matter of the proceeding; and

4. The circumstances establishing that the request for a hearing is timely in accordance with § 2.1205(c).

In accordance with 10 CFR § 2.1205(e), each request for a hearing must also be served, by delivering it personally or by mail, to:

1. The applicant, Chem-Nuclear Systems, Inc., 140 Stoneridge Drive, Columbia, South Carolina 29210, Attention Mr William B. House, and;

2. The NRC staff, by delivery to the Secretary, U.S. Nuclear Regulatory Commission, Washington, D.C., 20555–0001. Attention: Docketing and Services Branch; or hand-deliver comments to: 11555 Rockville Pike, Rockville, MD between 7:45 a.m. and 4:15 p.m., Federal workdays.

For further details with respect to this action, the application for amendment request is available for inspection at the NRC's Public Document Room, 2120 L Street NW., Washington, DC 20555.

Dated at Rockville, Maryland, this 16th day of July 1996.

For the Nuclear Regulatory Commission.

Michael F. Weber,

Chief, Low-Level Waste and Decommissioning Projects Branch, Division of Waste Management, Office of Nuclear Material Safety and Safeguards.

[FR Doc. 96–18491 Filed 7–19–96; 8:45 am]

BILLING CODE 7590–01–P

[IA 96–042]

Order Prohibiting Involvement in NRC-Licensed Activities

In the Matter of Mark A. Jenson (Home Address Deleted Under 10 CFR 2.2790).

I

Mark A. Jenson was employed as President of NDT Services, Inc. in Caguas, Puerto Rico, in 1993. NDT Services, Inc. (NDTS or Licensee) holds License No. 52–19438–01, issued to the Licensee in 1987 and last amended by the Nuclear Regulatory Commission (NRC or Commission) pursuant to 10 CFR Part 30 on March 9, 1995. The license authorizes industrial gamma ray radiography in accordance with the conditions specified therein. Mr. Jenson was identified in a letter from the Licensee to NRC, dated September 4, 1993, and in other licensing and inspection correspondence, as the President, NDTS.

II

On December 16–17, 1993, a special inspection of NDTS' activities was conducted at the Licensee's facility in Caguas, Puerto Rico, in response to notifications received in the NRC Region II office that on September 4, 1993, two contract radiographers [1] employed by NDTS had been unable to return a radiography source to its shielded position following radiographic operations, which resulted in the evacuation of the Sun Oil Company refinery in Yabucoa, Puerto Rico, for several hours. Based on the results of the inspection, an investigation was initiated by the NRC Office of Investigations (OI) on December 30, 1993.

On December 21, 1995, OI completed its investigation and concluded, in part, the NDTS, with the knowledge and approval of the former Radiation Safety Officer (RSO) and former President, deliberately utilized radiographers untrained in NDTS operating and emergency procedures. During an August 31, 1995 interview with OI, Mr. Jenson stated that he was aware that even a highly qualified radiographer from another company must received additional training before operating under NDTS' program. Mr. Jenson further stated that, prior to the September 4, 1993 incident, NDTS' former RSO told Mr. Jenson that the radiographers needed additional training prior to performing radiography. Nonetheless, Mr. Jenson allowed the radiographers to conduct licensed activities without the required training. In addition, Mr. Jenson stated that, following the September 4, 1993 incident, he requested both radiographers to sign a document certifying that the radiographers had been trained by NDTS, when in fact, they had not been. The radiographers refused to sign the document. Furthermore, during a May 19, 1995 transcribed interview with OI, one of the radiographers corroborated Mr. Jenson's admission (i.e., that Mr. Jenson asked the radiographer to sign a document indicating that the radiographer had been trained).

By letter dated February 20, 1996, Mr. Jenson was informed of the inspection and investigation results and was provided the opportunity to participate in a predecisional enforcement conference. Although the NRC has confirmation that Mr. Jenson received the letter (i.e., returned certified mail

[1] The radiographers involved in the event were contracted by NDTS from National Inspection and Consultants (NIC), an Agreement State Licensee in Florida. While no written contract was established to outline the scope and conditions of work, based on the information available, the NRC concluded that the work performed on September 4, 1993, was performed under the provisions of the NDTS License.

receipt as well as a telephone acknowledgement by his spouse to the NRC on February 29, 1996), Mr. Jenson never responded to the letter and, therefore, no conference has been conducted with him. However, on May 17, 1996, a teleconference was conducted with Mr. Jenson to further discuss this case. Additionally, on February 29 and March 4, 1996, predecisional enforcement conferences were conducted with one of the contract radiographers, and NDTS, respectively.

Based on the information gathered during the inspection, investigation, predecisional enforcement conferences, and subsequent interviews in this case, the NRC has determined that: (1) Mr. Jenson deliberately permitted unqualified radiographers to perform radiography for NDTS on September 4, 1993, in that he knew the radiographers had not been trained in NDTS procedures or equipment; and (2) Mr. Jenson attempted to generate a false, NRC-required training record for the contract radiographers involved in the source disconnect event when, subsequent to September 4, 1993, he requested both individuals to sign a document indicating that the individual had been trained in the NDTS radiation safety manual and procedure, when in fact, the contract radiographer had not been trained.

III

Based on the above, the staff concludes that Mr. Jenson engaged in deliberate misconduct, a violation of 10 CFR 30.10, which caused the Licensee to be in violation of 10 CFR 34.31(a) by failing to utilize trained and qualified individuals for the conduct of radiographic operations at the Sun Oil Company refinery on September 4, 1993. Mr. Jenson's attempt to generate a falsified training record for the radiographer also demonstrates a lack of integrity which cannot be tolerated. As the former President of NDTS, Mr. Jenson was responsible for ensuring that NDTS conducted activities in accordance with NRC requirements. The NRC must be able to rely on the Licensee, its officials and employees to comply with NRC requirements, including the requirements to train radiographers in accordance with NRC regulations and to maintain complete and accurate information required by the NRC. Mr. Jenson's deliberate misconduct in causing the Licensee to violate 10 CFR 34.31(a) is a violation of 10 CFR 30.10 and has raised serious doubt as to whether he can be relied upon to comply with NRC requirements.

Consequently, I lack the requisite reasonable assurance that licensed activities can be conducted in compliance with the Commission's requirements and that the health and safety of the public will be protected if Mr. Jenson were permitted at this time to be involved in NRC-licensed activities. Therefore, the public health, safety and interest require that Mr. Jenson be prohibited from any involvement in NRC-licensed activities for a period of five years, and, if he is currently involved with another licensee in NRC-licensed activities, he must, following the effective date of this Order, cease such activities, and inform the NRC of the name, address and telephone number of the employer, and provide a copy of this Order to the employer. Additionally, Mr. Jenson is required to notify the NRC of his first employment involving NRC-licensed activities within a period of five years following the five-year prohibition period.

IV

Accordingly, pursuant to sections 81, 161b, 161i, 182 and 186 of the Atomic Energy Act of 1954, as amended, and the Commission's regulations in 10 CFR 2.202, and 10 CFR 30.10, *it is hereby ordered that:*

A. For a period of five years from the effective date of this Order, Mark A. Jenson is prohibited from engaging in, or exercising control over individuals engaged in, NRC-licensed activities. NRC-licensed activities are those activities which are conducted pursuant to a specific or general license issued by the NRC, including, but not limited to, those activities of Agreement State licensees conducted pursuant to the authority granted by 10 CFR 150.20. This prohibition includes, but is not limited to: (1) Using licensed materials or conducting licensed activities in any capacity within the jurisdiction of the NRC; and (2) supervising or directing any licensed activities conducted within the jurisdiction of the NRC.

B. At least five days prior to the first time that Mark A. Jenson engages in, or exercises control over, NRC-licensed activities within a period of five years following the five-year prohibition period outlined in Section IV.A above, he shall notify the Director, Office of Enforcement, U.S. Nuclear Regulatory Commission, Washington, D.C. 20555, of the name, address, and telephone number of the NRC or Agreement State licensee and the location where the licensed activities will be performed. The notice shall be accompanied by a statement, under oath or affirmation, that Mark A. Jenson understands NRC requirements, that he is committed to compliance with NRC requirements, and that provides a basis as to why the Commission should have confidence that he will now comply with applicable NRC requirements.

The Director, Office of Enforcement, may, in writing, relax or rescind any of the above conditions upon demonstration by Mr. Jenson of good cause.

V

In accordance with 10 CFR 2.202, Mark A. Jenson must, and any other person adversely affected by this Order may, submit an answer to this Order, and may request a hearing on this Order, within 20 days of the date of this Order. Where good cause is shown, consideration will be given to extending the time to request a hearing. A request for extension of time must be made in writing to the Director, Office of Enforcement, U.S. Nuclear Regulatory Commission, Washington, D.C. 20555, and include a statement of good cause for the extension. The answer may consent to this Order. Unless the answer consents to this Order, the answer shall, in writing and under oath or affirmation, specifically admit or deny each allegation or charge made in this Order and shall set forth the matters of fact and law on which Mr. Jenson or other person adversely affected relies and the reasons as to why the Order should not have been issued. any answer or request for a hearing shall be submitted to the Secretary, U.S. Nuclear Regulatory Commission, Attn: Chief, Docketing and Service Section, Washington, DC 20555. Copies also shall be sent to the Director, Office of Enforcement, U.S. Nuclear Regulatory Commission, Washington, DC 20555, to the Assistant General Counsel for Hearing and Enforcement at the same address, to the Regional Administrator, NRC Region II, Suite 2900, 101 Marietta Street, Atlanta, GA 30323, and to Mark A. Jenson, if the answer or hearing request is by a person other than Mark A. Jenson. If a person other than Mark A. Jenson requests a hearing, that person shall set forth with particularity the manner in which his or her interest is adversely affected by this Order and shall address the criteria set forth in 10 CFR 2.714(d).

If a hearing is requested by Mark A. Jenson, or another person whose interest is adversely affected, the Commission will issue an Order designating the time and place of any hearing. If a hearing is held, the issue to be considered at such hearing shall be whether this Order should be sustained.

In the absence of any request for hearing, or written approval of an extension of time in which to request a

hearing, the provisions specified in Section IV above shall be final 20 days from the date of this Order without further order or proceedings. If an extension of time for requesting a hearing has been approved, the provisions specified in Section IV shall be final when the extension expires if a hearing request has not been received.

For the Nuclear Regulatory Commission.

Dated at Rockville, Maryland, this 16th day of July 1996.

Hugh L. Thompson, Jr.,

Deputy Executive Director for Nuclear Materials Safety, Safeguards and Operations Support.

[FR Doc. 96–18494 Filed 7–19–96; 8:45 am]

BILLING CODE 7590–01–M

[IA 96–043]

Order Prohibiting Involvement in NRC-Licensed Activities

In the Matter of Jesus N. Osorio (Home Address Deleted Under 10 CFR 2.790).

I

Jesus N. Osorio was employed as the Radiation Safety Officer (RSO) of NDT Services, Inc. (NDTS or Licensee) in Caguas, Puerto Rico, in 1993. NDTS holds License No. 52–19438–01, issued to the Licensee in 1987 and last amended by the Nuclear Regulatory Commission (NRC or Commission) pursuant to 10 CFR Part 30, on March 9, 1995. The license authorizes industrial gamma ray radiography in accordance with the conditions specified therein. Mr. Osorio was identified in consecutive amendments to NRC License No. 52–19438–01, dated January 12, 1992 and October 26, 1993, and in other licensing correspondence, as the RSO for NDTS.

II

On December 16–17, 1993, a special inspection of NDTS' activities was conducted at the Licensee's facility in Caguas, Puerto Rico, in response to notifications received in the NRC Region II office that on September 4, 1993, two contract radiographers [1] employed by NDTS had been unable to return a radiography source to its shielded position following radiographic operations, which resulted in the evacuation of the Sun Oil Company refinery located in Yabucoa, Puerto Rico, for several hours. Based on the results of the inspection, an investigation was initiated by the NRC Office of Investigations (OI) on December 30, 1993.

On December 21, 1995, OI completed its investigation and concluded, in part, that: (1) NDTS, with the knowledge and approval of the former RSO and former President, deliberately utilized radiographers untrained in NDTS operating and emergency procedures; and (2) NDTS, through the actions of the former RSO, provided the NRC with documentation that falsely certified the radiographers' training.

During an August 31, 1995 interview with OI, Mr. Osorio stated that he was aware that the radiographers needed training and that they were required to pass a proficiency test prior to working at the Sun Oil Company refinery. Mr. Osorio added that, prior to hiring the radiographers, he informed NDTS' former President that the radiographers would have to be trained and tested on NDTS equipment. Nonetheless, Mr. Osorio did not train the radiographers because they left for their accommodations and he was tired and went home, although he knew that they would work their shift without the required training. As to the false training documentation, Mr. Osorio stated that he knew he signed false documentation and that such falsification constituted a violation of NRC regulations, but he signed the documentation because he ''needed to have something.''

Based on the OI conclusions, the NRC further concluded that during the December 16–17, 1993 inspection, the former RSO orally represented to an NRC inspector that he demonstrated the safe use of the NDTS radiography equipment prior to allowing two contract radiographers to operate the equipment on September 3, 1993, when he knew that he had not conducted such a demonstration.

On February 15, 1996, Mr. Osorio was contacted by telephone and initially informed of the inspection and investigation results and was provided the opportunity to participate in a predecisional enforcement conference. During this telephone conversation, Mr. Osorio declined to attend this conference. By letter dated February 20, 1996, Mr. Osorio was transmitted the Inspection Report and the synopsis of the OI investigation and again offered the opportunity to attend a conference. To date, Mr. Osorio has not responded to the February 20, 1996 letter. No conference has been conducted with him; however, on May 16, 1996, a teleconference was conducted with Mr. Osorio to further discuss this case. Additionally, on February 29 and March 4, 1996, predecisional enforcement conferences were conducted with one of the contract radiographers, and NDTS, respectively.

Based on the information gathered during the inspection, investigation, predecisional enforcement conferences, and subsequent interviews in this case, the NRC has determined that: (1) Mr. Osorio deliberately permitted unqualified radiographers to perform radiography for NDTS on September 4, 1993, in that he knew the radiographers had not been trained in NDTS procedures or equipment; (2) on December 16, 1993, Mr. Osorio provided an NRC inspector with written certification of the qualifications of the two contract radiographers, dated September 3, 1993, which falsely indicated that the radiographers had been qualified based on records obtained from their principal employer and by the experience demonstrated by the contract radiographers to him; and (3) on December 16, 1993, Mr. Osorio provided false oral statements to an NRC inspector indicating that he had demonstrated the safe use of the NDTS radiography equipment to the radiographers on September 3, 1993, when, in fact, he had not conducted such a demonstration.

III

Based on the above, the staff concludes that Mr. Osorio engaged in deliberate misconduct, a violation of 10 CFR 30.10, which caused the Licensee to be in violation of 10 CFR 34.31(a) by deliberately failing to utilize trained and qualified individuals during the conduct of radiographic operations at the Sun Oil Company refinery on September 4, 1993. Mr. Osorio also violated 10 CFR 30.10(a)(2), and caused the Licensee to be in violation of 10 CFR 30.9, by deliberately providing materially inaccurate and incomplete information to the NRC. As the former RSO of NDTS, Mr. Osorio was responsible to assure that NDTS conducted activities in accordance with NRC requirements and the NDTS radiation safety program. The NRC must be able to rely on the Licensee, its officials and employees to comply with NRC requirements, including the requirements to train radiographers in accordance with NRC regulations and to provide complete and accurate information to the NRC. Mr. Osorio's deliberate misconduct in causing the Licensee to violate 10 CFR 34.31(a), and his deliberate submission to the NRC materially inaccurate and incomplete

[1] The radiographers involved in the event were contracted by NDTS from National Inspection and Consultants (NIC), an Agreement State licensee in Florida. While no written contract was established to outline the scope and conditions of work, based on the information available, the NRC concluded that the work performed on September 4, 1993, was performed under the provisions of the NDTS license.

information, are violations of 10 CFR 30.10 and have raised serious doubt as to whether he can be relied upon to comply with NRC requirements.

Consequently, I lack the requisite reasonable assurance that licensed activities can be conducted in compliance with the Commission's requirements and that the health and safety of the public will be protected if Mr. Osorio were permitted at this time to be involved in NRC-licensed activities. Therefore, the public health, safety and interest require that Mr. Osorio be prohibited from any involvement in NRC-licensed activities for a period of five years, and, if he is currently involved with another licensee in NRC-licensed activities, he must, following the effective date of this Order, cease such activities, and inform the NRC of the name, address and telephone number of the employer, and provide a copy of this Order to the employer. Additionally, Mr. Osorio is required to notify the NRC of his first employment involving NRC-licensed activities within a period of five years following the five-year prohibition period.

IV

Accordingly, pursuant to sections 81, 161b, 161i, 182 and 186 of the Atomic Energy Act of 1954, as amended, and the Commission's regulations in 10 CFR 2.202, and 10 CFR 30.10, *it is hereby ordered that:*

A. For a period of five years from the effective date of this Order, Jesus N. Osorio is prohibited from engaging in, or exercising control over individuals engaged in NRC-licensed activities. NRC-licensed activities are those activities which are conducted pursuant to a specific or general license issued by the NRC, including, but not limited to, those activities of Agreement State licensees conducted pursuant to the authority granted by 10 CFR 150.20. This prohibition includes, but is not limited to: (1) Using licensed materials or conducting licensed activities in any capacity within the jurisdiction of the NRC; and (2) supervising, directing, or serving as Radiation Safety Officer for any licensed activities conducted within the jurisdiction of the NRC.

B. At least five days prior to the first time that Jesus N. Osorio engages in, or exercises control over, NRC-licensed activities within a period of five years following the five-year prohibition in Section IV.A above, a, he shall notify the Director, Office of Enforcement, U.S. Nuclear Regulatory Commission, Washington, D.C. 20555, of the name, address, and telephone number of the NRC or Agreement State licensee and the location where the licensed activities will be performed. The notice shall be accompanied by a statement, under oath or affirmation, that Jesus N. Osorio understands NRC requirements, that is committed to compliance with NRC requirements, and that provides a basis as to why the Commission should have confidence that he will now comply with applicable NRC requirements.

The Director, Office of Enforcement, may, in writing, relax or rescind any of the above conditions upon demonstration by Mr. Osorio of good cause.

V

In accordance with 10 CFR 2.202, Jesus N. Osorio must, and any other person adversely affected by this Order may, submit an answer to this Order, and may request a hearing on this Order, within 20 days of the date of this Order. Where good cause is shown, consideration will be given to extending the time to request a hearing. A request for extension of time must be made in writing to the Director, Office of Enforcement, U.S. Nuclear Regulatory Commission Washington, D.C. 20555, and include a statement of good cause for the extension. The answer may consent to this Order. Unless the answer consents to this Order, the answer shall, in writing and under oath or affirmation, specifically admit or deny each allegation or charge made in this Order and shall set forth the matters of fact and law on which Mr. Osorio or other person adversely affected relies and the reasons as to why the Order should not have been issued. Any answer or request for a hearing shall be submitted to the Secretary, U.S. Nuclear Regulatory Commission, Attn: Chief, Docketing and Service Section, Washington, DC 20555. Copies also shall be sent to the Director, Office of Enforcement, U.S. Nuclear Regulatory Commission, Washington, DC 20555, to the Assistant General Counsel for Hearings and Enforcement at the same address, to the Regional Administrator, NRC Region II, Suite 2900, 101 Marietta Street, Atlanta, GA 30323, and to Jesus N. Osorio, if the answer or hearing request is by a person other than Jesus N. Osorio. If a person other than Jesus N. Osorio requests a hearing, that person shall set forth with particularity the manner in which his or her interest is adversely affected by this Order and shall address the criteria set forth in 10 CFR 2.714(d).

If a hearing is requested by Jesus N. Osorio, or another person whose interest is adversely affected, the Commission will issue an Order designating the time and place of any hearing. If a hearing is held, the issue to be considered at such hearing shall be whether this Order should be sustained.

In the absence of any request for hearing, or written approval of an extension of time in which to request a hearing, the provisions specified in Section IV above shall be final 20 days from the date of this Order without further order or proceedings. If an extension of time for requesting a hearing has been approved, the provisions specified in Section IV shall be final when the extension expires if a hearing request has not been received.

Dated at Rockville, Maryland, this 16th day of July 1996.

For the Nuclear Regulatory Commission.

Hugh L. Thompson, Jr.,

Deputy Executive Director for Nuclear Materials Safety, Safeguards and Operations Support.

[FR Doc. 96–18493 Filed 7–19–96; 8:45 am]

BILLING CODE 7590–01–P

[Docket Nos. 50–369 and 50–370]

Duke Power Company; McGuire Nuclear Station, Unit Nos. 1 and 2 Environmental Assessment and Finding of No Significant Impact

The U.S. Nuclear Regulatory Commission (the Commission) is considering issuance of amendments to Facility Operating License Nos. NPF–9 and NPF–17, issued to Duke Power Company (the licensee), for operation of the McGuire Nuclear Station, Units 1 and 2, located in Mecklenburg, North Carolina.

Environmental Assessment

Identification of the Proposed Action

By letter dated March 4, 1996, Duke Power Company (DPC) submitted a proposal for amendments to the Facility Operating Licenses that would allow the McGuire Units 1 and 2 Containment Airborne Particulate Radiation Monitors (CAPRMs, 1/2 EMF38(L)) to be reclassified in the Final Safety Analysis Report (FSAR) as non-seismic Category I. During a DPC engineering review of the seismic classification of these CAPRMs, it was determined that these monitors are not seismic Category I. Furthermore, DPC had documents that showed that these monitors are not required nor were they ever intended to be seismically qualified. Also, in a DPC letter to the NRC dated March 25, 1981, DPC further stipulated that the CAPRMs were not safety related. However, none

of this information was reflected in the McGuire FSAR.

By letter dated March 4, 1996, the licensee stated that the matter involved an unreviewed safety question and requested amendments to its Facility Operating Licenses including proposed changes to the FSAR, which would clarify that the CAPRMs are not designed to remain functional following a safe shutdown earthquake (SSE). Further, the licensee has proposed an alternative to Position C.6 of Regulatory Guide (RG) 1.45, ''Reactor Coolant Pressure Boundary Leakage Detection Systems,'' by showing that adequate instrumentation and procedures will be available to assess conditions inside containment following a seismic event comparable to an SSE and that, accordingly, the seismic qualification requirement for the CAPRMs may be deleted from the FSAR.

The Need for the Proposed Action

The proposed action is needed so that the appropriate seismic qualification for the CAPRMs can be reflected in the FSAR.

Environmental Impacts of the Proposed Action

The Commission has completed its evaluation of the proposed revisions to the FSAR. The proposed revisions would permit the Containment Airborne Particulate Radiation Monitors (1/2 EMF38(L)) at McGuire Units 1 and 2 to be classified as non-seismic Category I. The safety considerations associated with this re-classification have been evaluated by the NRC staff. The staff has concluded that the licensee has demonstrated an acceptable alternative to Position C.6 of RG 1.45 by showing that adequate instrumentation and procedures will be available to assess conditions inside containment following a seismic event comparable to an SSE. The proposed changes have no adverse effect on the probability of any accident. No changes are being made in the types or amounts of any radiological effluents that may be released offsite. There is no significant increase in the allowable individual or cumulative occupational radiation exposure.

Accordingly, the Commission concludes that there are no significant radiological environmental impacts associated with the proposed amendments.

With regard to potential nonradiological impacts, the proposed action involves features located entirely within the restricted area as defined in 10 CFR Part 20. It does not affect nonradiological plant effluents and has no other environmental impact. Accordingly, the Commission concludes that there are no significant nonradiological environmental impacts associated with the proposed action.

Alternatives to the Proposed Action

Since the Commission has concluded there is no measurable environmental impact associated with the proposed action, any alternatives with equal or greater environmental impact need not be evaluated. The principal alternative to this action would be to deny the requested amendments. Such action would not reduce the environmental impacts of plant operations.

Alternative Use of Resources

This action does not involve the use of resources not previously considered in the ''Final Environmental Statement Related to the Operation of McGuire Nuclear Station Units 1 and 2,'' dated April 1976.

Agencies and Persons Consulted

In accordance with its stated policy, on July 8, 1996, the NRC staff consulted with the North Carolina State official, Mr. J. James of the Division of Radiation Protection, Department of Environmental, Health and Natural Resources, regarding the environmental impact of the proposed action. The State official had no comments.

Finding of No Significant Impact

Based upon the environmental assessment, the Commission concludes that the proposed action will not have a significant effect on the quality of the human environment. Accordingly, the Commission has determined not to prepare an environmental impact statement for the proposed license amendments.

For further details with respect to this action, see the licensee's letter dated March 4, 1996, which is available for public inspection at the Commission's Public Document Room, The Gelman Building, 2120 L Street, NW., Washington, DC, and at the local public document room located at the J. Murrey Atkins Library, University of North Carolina at Charlotte (UNCC Station), Charlotte, North Carolina.

Dated at Rockville, Maryland, this 3rd day of July 1996.

For the Nuclear Regulatory Commission.

Victor Nerses,

Project Manager, Project Directorate II–2, Division of Reactor Projects—I/II, Office of Nuclear Reactor Regulation.

[FR Doc. 96–18492 Filed 7–19–96; 8:45 am]

BILLING CODE 7590–01–P

OFFICE OF PERSONNEL MANAGEMENT

SES Performance Review Board

AGENCY: Office of Personnel Management.

ACTION: Notice.

SUMMARY: Notice is hereby given of the membership of the OPM SES Performance Review Board.

FOR FURTHER INFORMATION CONTACT: Mark D. Reinhold, Office of Human Resources and EEO, Office of Personnel Management, 1900 E Street, NW., Washington, DC 20415, (202) 606–1882.

SUPPLEMENTARY INFORMATION: Section 4314(c) (1) through (5) of Title 5, U.S.C., requires each agency to establish, in accordance with regulations prescribed by the Office of Personnel Management, one or more SES performance review boards. The board reviews and evaluates the initial appraisal of a senior executive's performance by the supervisor, along with any recommendations to the appointing authority relative to the performance of the senior executive.

OFFICE OF PERSONNEL MANAGEMENT.

James B. King,

Director.

Following are the regular members of the SES Performance Review Board for the Office of Personnel Management:

Lorraine Green, Deputy Director
Janice Lachance, Chief of Staff
William E. Flynn, III, Associate Director, Retirement and Insurance Service
Mary Lou Lindholm, Associate Director, Employment Service
Allan Heuerman, Associate Director, Human Resources Systems Service
Carol Okin, Associate Director, Office of Merit Systems Oversight and Effectiveness
Rose Gwin, Director, Office of Human Resources and EEO

[FR Doc. 96–18516 Filed 7–19–96; 8:45 am]

BILLING CODE 6325–01–M

PRESIDENTIAL ADVISORY COMMITTEE ON GULF WAR VETERANS' ILLNESSES

Meeting

AGENCY: Presidential Advisory Committee on Gulf War Veterans' Illnesses.

ACTION: Notice of open meeting.

SUMMARY: This notice is hereby given to announce an open meeting of a panel of the Presidential Advisory Committee on Gulf War Veterans' Illnesses. The panel

will discuss several issues relevant to the Committee charter and will receive comment from members of the public. Dr. Andrea Kidd Taylor will chair this panel meeting.

DATES: August 6, 1996, 9:00 a.m.–4:00 p.m.

PLACE: Adam's Mark Hotel, 1550 Court Place, Denver, CO 80202.

SUPPLEMENTARY INFORMATION: The President established the Presidential Advisory Committee on Gulf War Veterans' Illnesses by Executive Order 12961, May 26, 1995. The purpose of this Advisory Committee is to review and provide recommendations on the full range of government activities associated with Gulf War veterans' illnesses. The Advisory Committee reports to the President through the Secretary of Defense, the Secretary of Health and Human Services, and the Secretary of Veterans Affairs. Advisory Committee members have expertise relevant to the functions of the Committee and are appointed by the President from non-Federal sectors.

Tentative Agenda

Tuesday, August 6, 1996

9:00 a.m.
Call to order and opening remarks
Public comment
10:30 a.m.
Break
10:45 a.m.
Briefing: Department of Defense Persian Gulf Veterans Illness Investigation Team
12:30 p.m.
Lunch
1:30 p.m.
Briefings: Risk factors
3:45 p.m.
Committee and staff discussion
4:00 p.m.
Adjourn

A final agenda will be available at the meeting.

Public Participation

The meeting is open to the public. Members of the public who wish to make oral statements should contact the Advisory Committee at the address or telephone number listed below at least five business days prior to the meeting. Reasonable provisions will be made to include on the agenda presentations from individuals who have not yet had an opportunity to address the Advisory Committee. Priority will be given to Gulf War veterans and their families. The panel chair is empowered to conduct the meeting in a fashion that will facilitate the orderly conduct of business. People who wish to file written statements with the Advisory Committee may do so at any time.

FOR FURTHER INFORMATION CONTACT: Thomas C. McDaniels, Jr., Presidential Advisory Committee on Gulf War Veterans' Illnesses, 1411 K Street, N.W., suite 1000, Washington, DC 20005–3404, Telephone: (202) 761–0066, Fax: (202) 761–0310.

Dated: July 15, 1996.

C.A. Bock,

Federal Register Liaison Officer, Presidential Advisory Committee on Gulf War Veterans' Illnesses.

[FR Doc. 96–18475 Filed 7–19–96; 8:45 am]

BILLING CODE 3610–76–M

SECURITIES AND EXCHANGE COMMISSION

Proposed Collection; Comment Request

Upon Written Request, Copies Available From: Securities and Exchange Commission, Office of Filings and Information Services, Washington, DC 20549.

Extension:

Rule 12d2–1—SEC File No. 270–98; OMB Control No. 3235–0081
Rule 12d2–2 and Form 25—SEC File No. 270–86; OMB Control No. 3235–0080
Rule 15Ba2–5—SEC File No. 270–91; OMB Control No. 3235–0088
Rule 15c3–1—SEC File No. 270–197; OMB Control No. 3235–0200
Rule 17a–10—SEC File No. 270–154; OMB Control No. 3235–0122

Notice is hereby given that pursuant to the Paperwork Reduction Act of 1995 (44 U.S.C. 3501 *et seq.*), the Securities and Exchange Commission (''Commission'') is publishing the following summaries of collections for public comment.

Rule 12d2–1 was adopted in 1935 pursuant to Sections 12 and 23 of the Securities Exchange Act of 1934 (the ''Act''). The Rule provides the procedures by which a national securities exchange may suspend from trading a security that is listed and registered on the exchange. Under Rule 12d2–1, an exchange is permitted to suspend from trading a listed security in accordance with its rules, and must promptly notify the Commission of any such suspension, along with the effective date and the reasons for the suspension.

Any such suspension may be continued until such time as the Commission may determine that the suspension is designed to evade the provisions of Section 12(d) of the Act and Rule 12d2–1 thereunder.[1] During the continuance of such suspension under Rule 12d2–1, the exchange is required to notify the Commission promptly of any change in the reasons for the suspension. Upon the restoration to trading of any security suspended under the Rule, the exchange must notify the Commission promptly of the effective date of such restoration.

The trading suspension notices serve a number of purposes. First, they inform the Commission that an exchange has suspended from trading a listed security or reintroduced trading in a previously suspended security. They also provide the Commission with information necessary for it to determine that the suspension has been accomplished in accordance with the rules of the exchange, and to verify that the exchange has not evaded the requirements of Section 12(d) of the Act and Rule 12d2–2 thereunder by improperly employing a trading suspension. Without the Rule, the Commission would be unable to fully implement these statutory responsibilities.

There are nine national securities exchanges which are subject to Rule 12d2–1. The burden of complying with the rule is not evenly distributed among the exchanges, since there are many more securities listed on the New York and American Stock Exchanges than on the other exchanges.[2] However, for purposes of this filing, it is assumed that the number of responses is evenly divided among the exchanges. This results in a total annual burden of 54 hours based on nine respondents with 12 responses per year for a total of 108 responses requiring an average of .5 hour per response.

Based on information acquired in an informal survey of the exchanges and the staff's experience in administering related rules, the Commission staff estimates that the respondents' cost of compliance with Rule 12d2–1 may range from less than $10 to $100 per response. The staff has computed the average cost per response to be approximately $15, representing one-half reporting hour. The estimated total annual cost for complying with Rule 12d2–1 is about $1620, i.e., nine exchanges filing 12 responses at $15.00 each.

Rule 12d2–2 and Form 25 were adopted in 1935 and 1952, respectively, pursuant to Sections 12 and 23 of the

[1] Rule 12d2–2 prescribes the circumstances under which a security may be delisted, and provides the procedures for taking such action.

[2] In fact, some exchanges do not file any trading suspension reports in a given year.

Act. Rule 12d2–2 sets forth the conditions and procedures under which a security may be delisted. Rule 12d2–2 also requires, under certain circumstances, that the Exchange file with the Commission a Form 25 to delist the security. Form 25 provides the Commission with the name of the security, the effective date of the delisting, and the date and type of event causing the delisting.

Delisting notices and applications for delisting serve a number of purposes. First, the reports and notices required under paragraphs (a) and (b) of Rule 12d2–2 (which do not require Commission action) inform the Commission that a security previously traded on an exchange is no longer traded. In addition, the applications for delisting required under paragraphs (c) and (d) of the Rule (which require Commission approval) provide the Commission with the information necessary for it to determine that the delisting has been accomplished in accordance with the rules of the exchange, and to verify that the delisting is subject to any terms and conditions necessary for the protection of investors. Further, delisting applications are available to members of the public who may wish to comment or submit information to the Commission regarding the applications. Without the Rule, the Commission lacks the information necessary for it to fully meet these statutory responsibilities.

There are nine national securities exchanges which are subject to Rule 12d2–2 and Form 25. The burden of complying with the Rule and Form is not evenly distributed among the exchanges, since there are many more securities listed on the New York and American Stock Exchanges than on the other exchanges. However, for purposes of this filing, the staff has assumed that the number of responses is evenly divided among the exchanges. This results in a total annual burden of 450 hours based on nine respondents with 50 responses per year for a total of 450 responses requiring an average of one hour per response.

Based on information acquired in an informal survey of the exchanges and the staff's experience in administering related rules, the Commission staff estimates that the cost of compliance with Rule 12d2–2 and Form 25 may range from less than $10 to $200 per response. The staff has computed the average cost per response to be approximately $30, representing one reporting hour per response. The estimated total annual cost for complying with Rule 12d2–2 is about $13,500, i.e., nine exchanges filing 50 responses at $30.00 each.

On July 14, 1976, the Commission adopted Rule 15Ba2–5 under the Act to permit a duly-appointed fiduciary to assume immediate responsibility for the operation of a municipal securities dealer's business. Without the rule, the fiduciary would not be able to assume operation until it registered as a municipal securities dealer. Under the rule, the registration of a municipal securities dealer is deemed to be the registration of any executor, guardian, conservator, assignee for the benefit of creditors, receiver, trustee in insolvency or bankruptcy, or other fiduciary appointed or qualified by order, judgment, or decree of a court of competent jurisdiction to contain the business of such municipal securities dealer, provided that the fiduciary files with the Commission, within 30 days after entering upon the performance of its duties, a statement setting forth substantially the same information required by Form MSD or Form BD. That statement is necessary to ensure that the Commission and the public have adequate information about the fiduciary.

There is approximately 1 respondent per year that requires an aggregate total of 4 hours to comply with this rule. This respondent makes an estimated 1 annual response. Each response takes approximately 4 hours to complete. Thus, the total compliance burden per year is 4 burden hours. The approximate cost per hours is $20, resulting in a total cost of compliance for the respondent of $80 (4 hours @ $20).

Rule 15c3–1 requires broker-dealers to, in essence, maintain minimum levels of net capital computed in accordance with the rule's provisions. Various provisions of Rule 15c3–1 require brokers and dealers to notify the Commission and/or its Designated Examining Authority (''DEA'') in certain situations. For example, a broker-dealer carrying the account of an options market-maker must file a notice with the Commission and the DEA of both the carrying firm and the market-maker. In addition, the carrying firm must notify the Commission and the appropriate DEA if a market-maker fails to deposit any required equity with the carrying broker or dealer relating to his market-maker account within the prescribed time period or if certain deductions and other amounts relating to the carrying firm's market-maker accounts computed in accordance with the rule's provisions exceeds 1000% of the carrying broker's or dealer's net capital.

Moreover, Appendix C to the rule requires brokers and dealers, under certain circumstances, to submit to their DEA an opinion of counsel stating, in essence, that the broker or dealer may cause that portion of the net assets of a subsidiary or affiliate related to its ownership interest in the entity to be distributed to the broker or dealer within 30 calendar days.

It is anticipated that approximately 1,150 broker-dealers will each spend 1 hour per year complying with Rule 15c3–1. The total cost is estimated to be approximately 1,150 hours. With respect to those broker-dealers that must give notice under the rule, the cost is approximately $20 per response for a total annual expense for all broker-dealers of $23,000.

All brokers and dealers are required, pursuant to Rule 17a–10, to file with the Commission an annual report of revenue and expenses. The primary purpose of the rule is to obtain the economic and statistical data necessary for an ongoing analysis of the securities industry.

Rule 17a–10 required brokers and dealers to provide their revenue and expense data on a special form. The rule was amended in 1987 to eliminate the form and reduce the amount of paperwork required of brokers and dealers. The data previously reported on the form is now obtained by the Commission staff from the quarterly balance sheet and Statement of Income (Loss) which are filed with Form X–17A–5 (SEC File No. 270–155; OMB No. 3235–0123), and from the three supplementary schedules to Form X–17A–5, which are filed at the close of each calendar year.

It is anticipated that approximately 2,600 broker-dealers will each spend 1 hour per year complying with Rule 17a–10. The total cost is estimated to be approximately 2,600 hours. Each broker-dealer will spend approximately $10 per response for a total annual expense for all broker-dealers of $26,000.

Written comments are invited on: (a) Whether the proposed collection of information is necessary for the proper performance of the functions of the agency, including whether the information shall have practical utility; (b) the accuracy of the agency's estimate of the burden of the proposed collection of information; (c) ways to enhance the quality, utility, and clarity of the information to be collected; and (d) ways to minimize the burden of the collection of information on respondents, including through the use of automated collection techniques or other forms of information technology. Consideration will be given to comments and suggestions submitted in

writing within 60 days of this publication.

Direct your written comments to Michael E. Bartell, Associate Executive Director, Office of Information Technology, Securities and Exchange Commission, 450 5th Street, NW., Washington, DC 20549.

Dated: July 3, 1996.

Margaret H. McFarland,

Deputy Secretary.

[FR Doc. 96–18458 Filed 7–19–96; 8:45 am]

BILLING CODE 8010–01–M

[Rel. No. IC–22074/812–10168]

Aetna Series Fund, Inc., et al.; Notice of Application

July 16, 1996.

AGENCY: Securities and Exchange Commission (''SEC'').

ACTION: Notice of application for exemption under the Investment Company Act of 1940 (the ''Act'').

APPLICANTS: Aetna Series Fund, Inc. (the ''Fund''), on behalf of the Aetna Asian Growth Fund (the ''Asian Growth Fund'') and the Aetna International Growth Fund (the ''International Growth Fund''), Aetna Life Insurance and Annuity Company (''ALIAC''), and Aetna Life Insurance Company (''ALIC'').

RELEVANT ACT SECTIONS: Order requested under section 17(b) for an exemption from section 17(a).

SUMMARY OF APPLICATION: Applicants request an order to permit the International Growth Fund to acquire substantially all of the assets of the Asian Growth Fund. Because of certain affiliations, the International Growth Fund and the Asian Growth Fund may not rely on rule 17a–8 under the Act.

FILING DATE: The application was filed on May 23, 1996, and amended on July 11, 1996.

HEARING OR NOTIFICATION OF HEARING: An order granting the application will be issued unless the SEC orders a hearing. Interested persons may request a hearing by writing to the SEC's Secretary and serving applicants with a copy of the request, personally or by mail. Hearing requests should be received by the SEC by 5:30 p.m. on August 12, 1996, and should be accompanied by proof of service on applicants, in the form of an affidavit or, for lawyers, a certificate of service. Hearing requests should state the nature of the writer's interest, the reason for the request, and the issues contested. Persons who wish to be notified of a hearing may request notification by writing to the SEC's Secretary.

ADDRESSES: Secretary, SEC, 450 Fifth Street, NW., Washington, DC 20549. Applicants, 151 Farmington Avenue, Hartford, Connecticut 06156–3124.

FOR FURTHER INFORMATION CONTACT: Deepak T. Pai, Staff Attorney, at (202) 942–0574, or Robert A. Robertson, Branch Chief, at (202) 942–0564 (Division of Investment Management, Office of Investment Company Regulation).

SUPPLEMENTARY INFORMATION: The following is a summary of the application. The complete application may be obtained for a fee at the SEC's Public Reference Branch.

Applicants' Representations

1. The Fund is a Maryland corporation registered under the Act as an open-end management investment company. The International Growth Fund and the Asian Growth Fund are each a series of the Fund. The International Growth Fund and the Asian Growth Fund are referred to herein as the ''Portfolios.''

2. ALIAC is the adviser and administrator for the Portfolios, and principal underwriter for the Fund. ALIAC and ALIC are indirect wholly-owned subsidiaries of Aetna Life and Casualty Company (together with ALIAC and ALIC, ''Aetna''). As of May 31, 1996, Aetna in the aggregate owned 49.99% of the outstanding shares of the International Growth Fund and 91.59% of the outstanding shares of the Asian Growth Fund.

3. Each Portfolio offers two classes of shares: Adviser Class shares, which are offered primarily to the general public, and Select Class shares, which are offered principally to institutions. Adviser Class shares are normally subject to a contingent deferred sales charge (''CDSC'') of 1%, declining to 0% after 4 years from the date of initial purchase. The adviser Class shares are subject to a rule 12b–1 distribution fee and a service fee at an annual rate of 0.50% and 0.25%, respectively. Select Class shares are not subject to any sales charge, CDSC, distribution fee or service fee.

4. The investment objectives, policies and restrictions of the International Growth Fund and the Asian Growth Fund are similar. Both seek long-term capital growth by investing in a diversified portfolio of common stocks principally traded in countries outside of North America. While the Asian Growth Fund's principal investments are limited to countries in Asia excluding Japan, the International Growth Fund may invest principally in a broader range of countries, which includes countries in which the Asian Growth Fund may currently invest.

5. The International Growth Fund proposes to acquire all or substantially all of the assets and certain liabilities of the Asian Growth Fund in exchange for shares of the International Growth Fund pursuant to an agreement and plan of reorganization and liquidation (the ''Plan''). The shares of the International Growth Fund to be issued (the ''New Shares'') will have an aggregate net asset value equal to the value of the assets of the Asian Growth Fund transferred less the liabilities assumed, determined as of the close of regular trading on the New York Stock Exchange on the business day next preceding the closing (the ''Valuation Date''). As soon as practicable after the closing, the New Shares will be distributed to the Asian Growth Fund shareholders in exchange for the shares of the Asian Growth Fund, each such shareholder to receive the number of New Shares that is equal in dollar amount to the value of shares of stock of the Asian Growth Fund held by such shareholder on the Valuation Date. After such distribution, the Asian Growth Fund will be terminated. For a 30-day period following the reorganization, the CDSC applicable to the Adviser Class shares will be waived for all Asian Growth Fund shareholders who redeem their newly issued shares of the International Growth Fund.

6. On April 30, 1996, at a meeting of the board, the Plan was approved by the directors of the Fund, including a majority of the directors who are not ''interested persons'' of ALIAC or the Portfolios (the ''disinterested directors''). In approving the Plan, the board, including the disinterested directors, found that participation in the reorganization is in the best interests of each Portfolio and that the interest of existing shareholders of each Portfolio will not be diluted as a result of the reorganization. The factors considered by the board included, among other things: (a) Recent and anticipated asset and expense levels of the Portfolios and future prospects of each Portfolio; (b) the similarity of the investment advisory, distribution and administration arrangements, the fact that the Portfolios have the same custodian, transfer agent, dividend disbursing agent and independent accounts, and the fact that the Portfolios expect the reorganization to realize savings in fixed expenses; (c) alternative options to the reorganization; (d) the potential benefits to Aetna; (e) the terms and conditions of the reorganization; (f) the similarity of the investment objectives; policies and restrictions of the two Portfolio; (g) the representation

that Aetna would bear the costs of the reorganization; and (h) the tax consequences expected to result from the reorganization. The board also considered ALIAC's proposal for managing the assets of the Portfolios, whereby after the reorganization, ALIAC and its affiliate, Aeltus Investment Management, Inc., would be the investment adviser and subadviser, respectively, to the International Growth Fund, subject to shareholder approval.

7. Applicants contemplate that the Plan will be submitted for approval by the shareholders of the Asian Growth Fund at a meeting scheduled to be held on or about August 28, 1996. A registration statement containing a combined prospectus/proxy statement has been filed with the SEC. The prospectus/proxy statement will be sent to shareholders of the Asian Growth Fund on or about July 25, 1996. Shareholders of the Select Class and Adviser Class shares of the Asian Growth Fund will vote together as a single class. Assuming that the required shareholder vote is obtained at the shareholders' meeting, the closing is expected to be held August 30, 1996.

8. Applicants agree not to make any material changes to the Plan that affect representations in the application without the prior approval of the SEC.

Applicants' Legal Analysis

1. Section 17(a), in pertinent part, prohibits an affiliated person of a registered investment company, acting as principal, from selling to or purchasing from such registered company, any security or other property.

2. Section 2(a)(3) of the Act defines the term ''affiliated person'' of another person to include, among other persons, any person directly or indirectly owning, controlling, or holding with power to vote, 5% or more of the outstanding voting securities of such other person; any person directly or indirectly controlling, controlled by, or under common control with, such other person; and, if such other person is an investment company, any investment adviser thereof.

3. Section 17(b) provides that the SEC may exempt a transaction from section 17(a) if evidence establishes that the terms of the proposed transaction, including the consideration to be paid, are reasonable and fair and do not involve overreaching on the part of any person concerned, and that the proposed transaction is consistent with the policy of the registered investment company concerned and with the general purposes of the Act.

4. Rule 17a–8 under the Act exempts from section 17(a) mergers, consolidations, or purchases or sales of substantially all the assets involving registered investment companies that may be affiliated persons solely by reason of having a common investment adviser, common directors, and/or common officers provided that certain conditions are satisfied. The reorganization may not be exempt from the prohibitions of section 17(a) by reason of rule 17a–8 because Aetna owns 5% or more of the outstanding voting securities of each Portfolio. Consequently, applicants are requesting an order under section 17(b) exempting the transactions from section 17(a) to the extent necessary to consummate the reorganization.

5. Applicants believe that the reorganization is consistent with the policies of the Portfolios and that the participation of Aetna in the reorganization would not be on a basis that is more advantageous than that of the Portfolios. Applicants believe that the terms of the proposed reorganization satisfy the standards set forth in section 17(b).

For the Commission, by the Division of Investment Management, under delegated authority.

Margaret H. McFarland,

Deputy Secretary.

[FR Doc. 96–18455 Filed 7–19–96; 8:45 am]

BILLING CODE 8010–01–M

[Rel. No. IC–22072; 812–10034]

Pacific Horizons Funds, Inc., et al.; Notice of Application

July 15, 1996.

AGENCY: Securities and Exchange Commission (''SEC'').

ACTION: Notice of application for exemption under the Investment Company Act of 1940 (the ''Act'').

APPLICANTS: Pacific Horizon Funds, Inc. (''Pacific Horizon''), Master Investment Trust, Series I (''MIT I''), Master Investment Trust, Series II (''MIT II''), Seafirst Retirement Funds (''Seafirst''), Time Horizon Funds (''Time Horizon''), each existing and future series of the above-named funds, and existing and future registered investment companies or series thereof that, now or in the future, are advised by Bank of America National Trust and Savings Association (''Bank of America'') or an entity controlling, controlled by, or under common control with Bank of America and any feeder fund that invests substantially all of its assets in any such investment company or series thereof (the ''Funds''); Bank of America; and Concord Financial Group, Inc. (''Concord'').[1]

RELEVANT ACT SECTIONS: Order requested under section 6(c) for an exemption from section 12(d)(1)(A)(ii), under sections 6(c) and 17(b) for an exemption from section 17(a)(1) and 17(a)(2), and under rule 17d–1 to permit certain transactions in accordance with section 17(d) and rule 17d–1.

SUMMARY OF APPLICATION: Applicants seek an order that would permit certain Funds to use their cash reserves to purchase shares of affiliated money market funds.

FILING DATES: The application was filed on March 6, 1996 and was amended on May 29, 1996. Applicants have agreed to file an amendment during the notice period, the substance of which is included in this notice.

HEARING OR NOTIFICATION OF HEARING: An order granting the application will be issued unless the SEC orders a hearing. Interested persons may request a hearing by writing to the SEC's Secretary and serving applicant with a copy of the request, personally or by mail. Hearing requests should be received by the SEC by 5:30 p.m. on August 9, 1996 and should be accompanied by proof of service on the applicant, in the form of an affidavit or, for lawyers, a certificate of service. Hearing requests should state the nature of the writer's interest, the reason for the request, and the issues contested. Persons may request notification of a hearing by writing to the SEC's Secretary.

ADDRESSES: Secretary, SEC, 450 Fifth Street, N.W., Washington, D.C. 20549. Applicants: Pacific Horizon, MIT II, Time Horizon, and Concord, 3435 Stelzer Road, Columbus, Ohio 43219; MIT I c/o Concord (Cayman Islands) Limited, Bank of America Building, Fort Street, George Town, Grand Cayman, Cayman Islands, British West Indies; Seafirst, 701 Fifth Avenue, Seattle, Washington 98104; and Bank of America, 555 California Street, San Francisco, California 94104.

FOR FURTHER INFORMATION CONTACT: Marianne H. Khawly, Staff Attorney, at (202) 942–0562, or Alison E. Baur, Branch Chief, at (202) 942–0564 (Division of Investment Management, Office of Investment Company Regulation).

SUPPLEMENTARY INFORMATION: The following is a summary of the application. The complete application

[1] All existing funds that presently intend to rely on the requested order are named as applicants.

may be obtained for a fee from the SEC's Public Reference Branch.

Applicants' Representations

1. Each Fund is an open-end management investment company organized in series form. Six of the Pacific Horizon series are money market funds subject to the requirements of rule 2a–7 under the Act (''Money Market Funds''). The remaining nine Pacific Horizon series and all of the existing series of MIT I, MIT II, Seafirst, and Time Horizon are variable net asset value funds (''Non-Money Market Funds''). Five of Pacific Horizon's Non-Money Market Funds and Seafirst's three series are organized as feeder funds that seek to achieve their investment objective by investing substantially all of their assets in corresponding series of MIT I, MIT II, or future master funds advised by Bank of America or an entity controlling, controlled by, or under common control with Bank of America (''Feeder Funds'').

2. Bank of America (the ''Adviser'') serves as investment adviser to each of the Funds except for the Feeder Funds, which have no investment adviser. The Adviser is a subsidiary of BankAmerica Corporation, a bank holding company. Concord, a subsidiary of Concord Holding Corporation, serves as distributor for each Pacific Horizon, Seafirst, and Time Horizon series. MIT I and MIT II have no distributor because they are offered in private placements.

3. The Money Market Funds seek current income, liquidity, and capital preservation by investing exclusively in short-term money market instruments, such as U.S. government securities, bank obligations, commercial paper, municipal obligations, and repurchase agreements secured by government securities. These short-term debt securities are valued at their amortized cost in accordance with the requirements of rule 2a–7. The Non-Money Market Funds invest in a variety of debt and/or equity securities in accordance with their respective investment objectives and policies.

4. Applicants request an order that would permit: (a) Each of the Non-Money Market Funds to utilize cash reserves that have not been invested in portfolio securities (''Uninvested Cash'') to purchase shares of one or more of the Money Market Funds, and (b) each Money Market Fund to sell shares to, and redeem such shares from, a Non-Money Market Fund. Applicants also request relief that would permit the Non-Money Market Funds to invest Uninvested Cash in a Money Market Fund in excess of the percentage limitations of section 12(d)(1)(A)(ii) of the Act. Applicants propose that each Non-Money Market Fund be permitted to invest in shares of a Money Market Fund provided that each Non-Money Market Fund's aggregate investment in such Money Market Fund does not exceed the greater of 5% of such Non-Money Market Fund's total net assets or $2.5 million. Applicants will comply with all other provisions of section 12(d)(1).

5. By investing Uninvested Cash in the Money Market Funds, applicants believe that the Non-Money Market Funds will be able to combine these cash balances and thereby reduce their transaction costs, create more liquidity, enjoy greater returns, and further diversify their holdings. The policies of the Non-Money Market Funds either now permit, or will be amended to permit, the Non-Money Market Funds to purchase money market instruments, including shares of a Money Market Fund.

6. The shareholders of the Non-Money Market Funds would not be subject to the imposition of double advisory fees. The Adviser, Concord, and each of their affiliated persons will remit to the respective Non-Money Market Fund, or waive, an amount equal to the investment advisory or other asset-based fees the Adviser, Concord, and each of their affiliated persons earn as a result of the Non-Money Market Fund's investments in the Money Market Funds to the extent such fees are based upon the Non-Money Market Fund's assets invested in shares of the Money Market Funds (the ''Reduction Amount''). Further, neither the Money Market Funds nor Concord will charge a sales charge, contingent deferred sales charge, a distribution fee under a plan adopted in accordance with the requirements of rule 12b–1 under the Act, or other underwriting or distribution fees to the Non-Money Market Funds with respect to those Funds' purchase or redemption of Money Market Fund shares. If a Money Market Fund offers more than one class of shares, each Non-Money Market Fund will invest only in the class with the lowest expense ratio that does not impose a sales charge, contingent deferred sales charge, rule 12b–1 fee, or other underwriting or distribution fee at the time of the investment.

7. The Adviser, Concord, and/or each of their affiliated persons currently or in the future may waive fees or reimburse expenses (an ''Expense Waiver''). Any Expense Waiver will not limit the advisory fee waiver or remittance discussed above.

Applicants' Legal Analysis

1. Sections 17(a)(1) and 17(a)(2) make it unlawful for any affiliated person of a registered investment company, or an affiliated person of such affiliated person, acting as principal, to sell any security to, or purchase any security from, such investment company. Because each Fund may be deemed to be under common control with the other Funds, it is an ''affiliated person,'' as defined in section 2(a)(3) of the Act, of the other Funds. Accordingly, the sale of shares of the Money Market Funds to the Non-Money Market Funds and the redemption of such shares of the Money Market Funds from the Non-Money Market Funds, would be prohibited under section 17(a).

2. Section 17(b) authorizes the SEC to exempt a transaction from section 17(a) if the terms of the proposed transaction, including the consideration to be paid or received, are reasonable and fair and do not involve overreaching on the part of any person concerned, the proposed transaction is consistent with the policy of each investment company concerned, and the proposed transaction is consistent with the general purposes of the Act. Under section 6(c), the SEC may exempt a series of transactions from any provision of the Act or any rule or regulation thereunder if, and to the extent that, such exemption is necessary or appropriate in the public interest and consistent with the protection of investors and the purposes fairly intended by the policy and provisions of the Act. Thus, applicants request relief under sections 6(c) and 17(b) because they wish to engage in a series of transactions rather than a single transaction.

3. The Non-Money Market Funds will retain their ability to invest their cash balances directly in money market instruments if they believe they can obtain a higher return. Each of the Money Market Funds has the right to discontinue selling shares to any of the Non-Money Market Funds if its board of directors/trustees determines that such sales would adversely affect the portfolio management and operations of such Money Market Fund. Therefore, applicants believe that the proposal satisfies the standards for relief.

4. Section 17(d) and rule 17d–1 prohibit an affiliated person of an investment company, acting as principal, from participating in or effecting any transaction in connection with any joint enterprise or joint arrangement in which the investment company participates. Each Non-Money Market Fund, the Adviser, and each of the Money Market Funds could be

considered participants in a joint enterprise or other joint arrangement within the meaning of section 17(d)(1) and rule 17d–1.

5. Under rule 17d–1, the SEC may permit a proposed joint transaction if participation by a registered investment company is consistent with the provisions, policies, and purposes of the Act, and not on a basis different from or less advantageous than that of the other participants. Applicants believe that their proposal satisfies these standards.

6. Section 12(d)(1)(A)(ii) prohibits a registered investment company from acquiring the securities of another investment company if, immediately thereafter, the acquiring company would have more than 5% of its total assets invested in the securities of the selling company. Applicants request an exemption from section 12(d)(1)(A)(ii) to permit each Non-Money Market Fund to invest in a Money Market Fund the greater of 5% of such Non-Money Market Fund's total net assets or $2.5 million. Applicants submit that the perceived abuses section 12(d)(1) sought to address include undue influence by an acquiring fund over the management of an acquired fund, layering of fees, and complex structures. Applicants believe that none of these concerns are presented by the proposed transactions and that the proposed transactions meet the section 6(c) standards for relief.

Applicants' Conditions

Applicants agree that the order granting the requested relief will be subject to the following conditions:

1. The shares of the Money Market Funds sold to and redeemed from the Non-Money Market Funds will not be subject to a sales load, redemption fee, distribution fee under a plan adopted in accordance with rule 12b–1, or service fee (as defined in section 26(b)(9) of the NASD Rules of Fair Practice).

2. Before the next meeting of the board of directors/trustees of a Non-Money Market Fund is held for the purpose of voting on an advisory contract under section 15, the Adviser to the Non-Money Market Fund will provide the board of directors/trustees with specific information regarding the approximate cost to the Adviser for, or portion of the advisory fee under the existing advisory fee attributable to, managing the assets of the Non-Money Market Fund that can be expected to be invested in the Money Market Funds. Before approving any advisory contract under section 15, the board of directors/trustees of the Non-Money Market Fund, including a majority of the directors who are not ''interested persons,'' as defined in section 2(a)(19), shall consider to what extent, if any, the advisory fees charged to the Non-Money Market Fund by the Adviser should be reduced to account for the reduction of these services to the Non-Money Market Fund by the Adviser under the advisory contract as a result of a portion of the assets of the Non-Money Market Fund being invested in the Money Market Funds. The minute books of the Non-Money Market Fund will record fully the board's consideration in approving the advisory contract, including the considerations relating to fees referred to above.

3. Each Non-Money Market Fund will be permitted to invest Uninvested Cash in, and hold shares of, a single Money Market Fund, so long as such Non-Money Market Fund's aggregate investment in such Money Market Fund does not exceed the greater of 5% of such Non-Money Market Fund's total net assets or $2.5 million.

For the SEC, by the Division of Investment Management, pursuant to delegated authority.

Margaret H. McFarland,

Deputy Secretary.

[FR Doc. 96–18454 Filed 7–19–96; 8:45 am]

BILLING CODE 8010–01–M

[Release No. 34–37440; File No. SR–DTC–96–07]

Self-Regulatory Organizations; The Depository Trust Company; Notice of Filing and Order Granting Accelerated Approval of a Proposed Rule Change to Modify Certain Provisions of the Fund/SERV Interface Agreement to Accommodate Same-Day Funds Settlement

July 15, 1996.

Pursuant to Section 19(b)(1) of the Securities Exchange Act of 1934 (''Act''),[1] notice is hereby given that on March 6, 1996, The Depository Trust Company (''DTC'') filed with the Securities and Exchange Commission (''Commission'') the proposed rule change (File No. SR–DTC–96–07) as described in Items I and II below, which items have been prepared primarily by DTC. The Commission is publishing this notice and order to solicit comments from interested persons and to grant accelerated approval of the proposed rule change.

I. Self-Regulatory Organization's Statement of the Terms of, Substance of the Proposed Rule Change

The purpose of the proposed rule change is to modify certain provisions of DTC's Fund/SERV Interface Agreement (''Fund/SERV Agreement'') with the National Securities Clearing Corporation (''NSCC'') because of the conversion of DTC's money settlement system entirely to a same-day funds settlement (''SDFS'') system.

II. Self-Regulatory Organization's Statement of the Purpose of, and Statutory Basis for, the Proposed Rule Change

In its filing with the Commission, DTC included statements concerning the purpose of and basis for the proposed rule change and discussed any comments that it received on the proposed rule change. The text of these statements may be examined at the places specified in Item IV below. DTC has prepared summaries, set forth in sections (A), (B), and (C) below, of the most significant aspects of such statements.[2]

(A) Self-Regulatory Organization's Statement of the Purpose of, and Statutory Basis for, the Proposed Rule Change

In 1989, DTC established an interface with NSCC to allow DTC participants that were not Fund/SERV members to access NSCC's Fund/SERV system.[3] Several provisions of the Fund/SERV Agreement between DTC and NSCC relating to settlement must be modified because of the conversion to SDFS.[4]

The Fund/SERV Agreement currently provides that DTC participants that participate in the Fund/SERV interface are required to make an additional deposit to DTC's next-day funds settlement (''NDFS'') participants fund. Under DTC's SDFS system, there no longer is a separate NDFS participants fund. Furthermore, each participant's Fund/SERV activity now will be included in the formula used to determine the amount of that participant's required deposit to DTC's

[1] 15 U.S.C. 78s(b)(1) (1988).

[2] The Commission has modified the text of the summaries submitted by DTC.

[3] Fund/SERV is a centralized, automated processing system for mutual fund purchases and redemptions. For a further description of Fund/SERV and DTC's interface with NSCC, refer to Securities Exchange Act Release Nos. 25146 (November 20, 1987), 52 FR 45418 [File No. SR–NSCC–87–08] (order granting permanent approval to NSCC's Fund/SERV); 31937 (March 1, 1993), 58 FR 12609 [File No. SR–NSCC–92–14] (order approving modifications to NSCC's Fund/SERV); and 27056 (July 24, 1989), 54 FR 31752 [File No. SR–DTC–89–09] (order approving DTC's Fund/SERV interface with NSCC).

[4] For further information regarding DTC's SDFS system, refer to Securities Exchange Act Release No. 35720 (May 16, 1995), 60 FR 27360 [File No. SR–DTC–95–06] (order granting accelerated approval of a proposed rule change modifying the SDFS system).

participants fund.[5] Accordingly, the Fund/SERV Agreement is being modified to reflect the existence of a single participants fund and a new participants fund formula.

In addition, the Fund/SERV Agreement will be modified to reflect the application of the SDFS settlement procedures and the SDFS failure to settle procedures, are set forth in DTC's Rules and Procedures. Under the proposed rule change, DTC no longer will settle Fund/SERV obligations separately from other settlement activity conducted between DTC and NSCC. DTC's settlement obligations resulting from Fund/SERV interface activity will be settled on a net basis with all other settlement obligations between DTC and NSCC. In the event a DTC participant fails to settle with DTC and the participant has a Fund/SERV debit owed to NSCC, DTC will employ its failure to settle procedures. If DTC's failure to settle procedures result in sufficient funds to pay NSCC, DTC will make such payment to NSCC. If the failure to settle procedures do not result in sufficient funds to pay the debit, DTC will not make payment to NSCC. On the next business day, NSCC will, on DTC's request, reverse the Fund/SERV transactions of the defaulting participant and recover any credits paid to NSCC Fund/SERV members with respect to the transactions.

DTC believes the proposed rule change is consistent with Section 17A of the Act and the rules and regulations thereunder because the proposed rule change will modify the Fund/SERV Agreement between DTC and NSCC to reflect the conversion to an entirely SDFS settlement system. DTC also believes the proposed rule change will be implemented consistently with the safeguarding of securities and funds in DTC's custody or control or for which it is responsible because the proposed rule change modifies the Fund/SERV Agreement to reflect the application of DTC's SDFS failure to settle procedures.

(B) Self-Regulatory Organization's Statement on Burden on Competition

DTC perceives no impact on competition by reason of the proposed rule change.

[5] Under DTC's SDFS system procedures, a participant's required deposit is based on the participant's liquidity needs. Therefore, a participant's Fund/SERV activity, to the extent it results in liquidity use (*i.e.*, net debits), will be included in the calculation of its required participants fund deposit.

(C) Self-Regulatory Organization's Statement on Comments on the Proposed Rule Change Received From Members, Participants, or Others

Comments on the proposed rule change were not solicited. DTC will notify the Commission of any written comments received by DTC.

III. Date of Effectiveness of the Proposed Rule Change and Timing for Commission Action

Section 17A(b)(3)(F) of the Act[6] requires that the rules of a clearing agency be designed to assure the safeguarding of securities and funds which are in the custody or control of the clearing agency or for which it is responsible and to foster cooperation and coordination with persons engaged in the clearance and settlement of securities transactions. The Commission believes that DTC's proposed rule change is consistent with DTC's obligations under Section 17A(b)(3)(F) because the proposed rule change should further reduce DTC's risk exposure with regard to its participants' Fund/SERV activities by applying DTC's SDFS settlement procedures and DTC's failure to settle procedures to the Fund/SERV interface.

Furthermore, although DTC does not guarantee its participants' Fund/SERV settlement payments to NSCC, the proposed rule change includes safeguards against losses due to participant defaults. Under the amended Fund/SERV Agreement between DTC and NSCC, DTC's SDFS failure to settle procedures will be employed to identify excess collateral and/or other funds to cover DTC's settlement obligations to NSCC resulting from a failed participant's Fund/SERV activities. If the application of DTC's SDFS failure to settle procedures produces funds to pay the defaulting participant's Fund/SERV obligations, then there should be a reduction in the number of reversals at NSCC. If DTC's procedures fail to produce sufficient funds, DTC will not be liable for the remaining settlement obligations, and NSCC will reverse the Fund/SERV transactions the following day.

The Commission also believes the proposal is consistent with DTC's obligations to foster cooperation and coordination with persons engaged in the clearance and settlement of securities transactions because the proposal will allow DTC and NSCC to settle obligations arising from Fund/SERV interface activity on a net basis; thus, simplifying the two clearing agencies' settlement procedures. Furthermore, the revised Fund/SERV Agreement sets forth DTC's and NSCC's responsibilities if a participant fails to settle and establishes a framework by which DTC and NSCC can mitigate the risks posed by a defaulting participant.

[6] 15 U.S.C. 78q–1(b)(3)(F) (1988).

DTC has requested that the Commission find good cause for approving the proposed rule change prior to the thirtieth day after the date of publication of notice of filing. The Commission finds good cause for so approving the proposed rule change prior to the thirtieth day after the date of publication of notice of filing because the proposed rule change will amend the Fund/SERV Agreement between DTC and NSCC in accordance with DTC's conversion to SDFS on February 22, 1996, and will allow DTC to apply the safeguards provided under the SDFS failure to settle procedures to the Fund/SERV interface immediately. Furthermore, the Commission has previously published notice of and approved NSCC's rule filing with regard to the proposed changes in the Fund/SERV interface and DTC's rule filing setting forth its SDFS failure to settle procedures. DTC's and NSCC's proposed rule changes did not generate any comment letters, and the Commission does not anticipate comments with regard to DTC's amendment to the Fund/SERV Interface Agreement.

IV. Solicitation of Comments

Interested persons are invited to submit written data, views, and arguments concerning the foregoing. Persons making written submissions should file six copies thereof with the Secretary, Securities and Exchange Commission, 450 Fifth Street, NW., Washington, DC 20549. Copies of the submission, all subsequent amendments, all written statements with respect to the proposed rule change that are filed with the Commission, and all written communications relating to the proposed rule change between the Commission and any person, other than those that may be withheld from the public in accordance with the provisions of 5 U.S.C. 552, will be available for inspection and copying in the Commission's Public Reference Room, 450 Fifth Street, NW., Washington, DC 20549. Copies of such filing will also be available for inspection and copying at the principal office of DTC. All submissions should refer to the file number SR–DTC–96–07 and should be submitted by August 12, 1996.

It is therefore ordered, pursuant to section 19(b)(2) of the Act, that the proposed rule change (File No. SR–DTC–96–07) be, and hereby is, approved.

For the Commission by the Division of Market Regulation, pursuant to delegated authority.[7]

Margaret H. McFarland,

Deputy Secretary.

[FR Doc. 96–18456 Filed 7–19–96; 8:45 am]

BILLING CODE 8010–01–M

[Release No. 34–37439; File No. SR–NASD–96–21]

Self-Regulatory Organizations; Order Approving Proposed Rule Change by National Association of Securities Dealers, Inc. Relating to Mandatory Electronic Filing of Forms U–4, U–5 and BD

July 15, 1996.

On June 7, 1996, the National Association of Securities Dealers, Inc. (''NASD'' or ''Association'') filed with the Securities and Exchange Commission (''SEC'' or ''Commission'') pursuant to Section 19(b)(1) of the Securities Exchange Act of 1934 (''Act''), 15 U.S.C. 78s(b)(1), a proposed rule change to require mandatory electronic filing of Forms U–4, U–5, and BD. Notice of the proposed rule change, together with the substance of the proposal, was issued by the Commission (Securities Exchange Act Release No. 37291, June 7, 1996) and published in the Federal Register (61 FR 30269, June 14, 1996). No comment letters were received. The Commission is approving the proposed rule change.

I. Background

The NASD has undertaken an extensive redesign of the Central Registration Depository (''CRD''), the central database for securities industry firms and personnel, with the goal of requiring electronic filing of registration-related forms. The focus of the redesign effort is to provide efficient, reliable, effective, state-of-the-art systems and procedures at reasonable cost to support licensing and regulation of the securities industry. The NASD believes the implementation of mandatory electronic filing will eliminate the delays that may stem from processing information in hard copy. Further, the NASD believes that redesigned CRD will offer efficient processing of registration-related filings and user-friendly access to information contained in those filings for all industry and regulatory participants. A detailed discussion of the CRD implementation plan appeared in the December 1995 issue of Membership On Your Side.

The NASD's proposal contains revisions to both the NASD By-Laws and its Membership and Registration Rules. The revisions to the By-Laws include amendments that require filers to submit information on Forms U–4, U–5, and BD via electronic means.[1] The NASD states that the impact of this requirement on smaller member firms with limited access and form filing needs was considered by its Board of Governors. The Board addressed this concern, by providing all firms with the option to contract with third party vendors to handle the filings with the CRD. The Board also determined to give firms that have less than fifty registered persons the option to file electronically, utilize a third-party service bureau or file with the NASD's internal processing unit. Member firms can choose for themselves based upon their needs whether to access the system directly by acquiring the necessary hardware and software and training their registration staff or to access the system indirectly via a third party agent or service bureau. The NASD asserts that its Membership staff is working with the vendors and service bureaus to make sure they are prepared to provide this service to members.

Specific-By-Law provisions which currently require filers to use ''forms'' or provide ''written notification'' are changed to require filing by electronic process or such other process as the NASD may prescribe. The provisions which refer to the filer obligations to keep applications ''current'' have been revised to set out more specific requirements including specific time frames (usually 30 days) for the filing of information. In addition, the NASD's membership eligibility criteria are amended to require firms to file via the electronic process. Firms that fail to comply with the electronic filing requirement may be subject to suspension or cancellation of membership.

The NASD has established a rollout schedule which began in May 1996 with approximately eleven member firms and one service bureau being involved in a pilot test. It is anticipated that the pilot firms will file all forms electronically in the new CRD system on approximately July 29, 1996.

The rollout schedule for all NASD members is as follows. The firms have been divided among five NASD Service and Quality teams. Team 1 goes into production on approximately September 9, 1996, Teams 2 and 3 on approximately October 7, 1996, and Teams 4 and 5 on approximately November 4, 1996.

Firms that had fewer than 50 registered representatives on April 26, 1996, (''Group II'') may comply with the electronic filing requirement through any of three methods: (1) They may file electronically on their own; (2) they may utilize a third-party vendor to file on their behalf; or (3) for a period commencing on September 9, 1996 and ending on December 31, 1997, for a prescribed fee, these firms may file paper forms with the NASD which through its own internal processing unit will file the forms with the new CRD system.

The NASD is also amending its Membership and Registration Rules to establish electronic filing protocols. Under these protocols the member will:

(1) Designate a Registered Principal(s) or corporate officer(s) to be responsible for supervising the electronic filing of appropriate filings with such responsibility to acknowledge, electronically, that the filing is on behalf of the firm and the member firm's associated persons.

(2) Retain and provide upon regulatory request original, signed Form U–4s which were electronically processed as initial or transfer applications as part of the recordkeeping requirements.

(3) File amendments to administrative data without the signature of the subject individual. Such information includes the addition of state or SRO registration, exam scheduling and updates to residential, business and personal history.

(4) File amendments to disclosure data electronically provided that the subject person has acknowledged that the information has been received and reviewed. This acknowledgement must be retained and provided upon regulatory request.

(5) File initial and amended Form U–5 Notice of Terminations electronically. The filing firm must make the filings available upon regulatory request.

II. Discussion

The Commission believes that the proposed rule change is consistent with the provisions of Section 15A(b)(6) of the Act,[2] which require the rules of the NASD be designed to prevent fraudulent

---

[7] 17 CFR 200.30–3(a)(12) (1995).

[1] On July 5, 1996, the Commission approved an NASD proposed rule change amending Forms U–4 and U–5. File No. SR–NASD–96–19; Securities Exchange Act Release No. 37407.

[2] 15 U.S.C. 78*o*–3(b)(6).

and manipulative activity and to foster coordination with persons engaged in regulating the markets. Mandatory electronic filing with the new CRD system will provide more efficient processing of registration-related filings and will allow for easy access to information in these filings by all industry and regulatory participants. In turn, electronic filing of these forms will facilitate oversight of securities industry firms and their personnel.

It is therefore ordered, pursuant to section 19(b)(2) of the Act, that the proposed rule change SR–NASD–96–21 be, and hereby is, approved.

For the Commission, by the Division of Market Regulation, pursuant to delegated authority, 17 CFR 200.30–3(a)(12).

Margaret H. McFarland,

Deputy Secretary.

[FR Doc. 96–18457 Filed 7–19–96; 8:45 am]

BILLING CODE 8010–01–M

SMALL BUSINESS ADMINISTRATION

Notice of Action Subject to Intergovernmental Review

The SBA is notifying the public that it intends to grant the pending applications of 21 existing SBDCs for refunding. A short description of the SBDC program follows.

The SBA is publishing this notice 90 days before the expected refunding date. The SBDCs and their mailing addresses are listed below. A copy of this notice also is being furnished to the respective State single points of contact designated under the Executive Order 12372.

Each SBDC application must be consistent with any area-wide small business assistance plan adopted by a State-authorized agency. A State single point of contact and other interested State or local entities may submit written comments regarding an SBDC refunding within 30 days from the date of publication of this notice to the SBDC and to Johnnie L. Albertson, Associate Administrator for SBDCs, U.S. Small Business Administration, 409 Third Street, S.W., Suite 4600, Washington, D.C. 20416.

Description of the SBDC Program

A partnership exists between SBA and an SBDC. SBDCs offer training, counseling, and other business development assistance to small businesses. Each SBDC provides services under a negotiated Cooperative Agreement with SBA, the general management and oversight of SBA, and a State plan initially approved by the Governor. Non-Federal funds must match Federal funds. An SBDC must operate according to law, the Cooperative Agreement, SBA's regulations, the annual Program Announcement, and program guidance.

Program Objectives

The SBDC program uses Federal funds to leverage the resources of States, academic institutions, and the private sector to:

(a) Strengthen the small business community;

(b) Increase economic growth;

(c) Assist more small businesses; and

(d) Broaden the delivery system to more small businesses.

SBDC Program Organization

The lead SBDC operates a statewide or regional network of SBDC subcenters. An SBDC must have a full-time Director. SBDCs must use at least 80 percent of the Federal funds to provide services to small businesses. SBDCs use volunteers and other low cost resources as much as possible.

SBDC Services

An SBDC must have a full range of business development and technical assistance services in its area of operations, depending upon local needs, SBA priorities, and SBDC program objectives. Services include training and counseling to existing and prospective small business owners in management, marketing, finance, operations, planning, taxes, and any other general or technical area of assistance that supports small business growth.

The SBA district office and the SBDC must agree upon the specific mix of services. They should give particular attention to SBA's priority and special emphasis groups, including veterans, women, exporters, the disabled, and minorities.

SBDC Program Requirements

An SBDC must meet programmatic and financial requirements imposed by statute, regulations, or its Cooperative Agreement. The SBDC must:

(a) Locate subcenters so that they are as accessible as possible to small businesses;

(b) Open all subcenters at least 40 hours per week, or during the normal business hours of its state or academic Host Organization, throughout the year;

(c) Develop working relationships with financial institutions, the investment community, professional associations, private consultants, and small business groups; and

(d) Maintain lists of private consultants at each subcenter.

Dated: June 19, 1996.

Philip Lader,

Administrator.

Addresses of Relevant SBDC State Directors

Mr. Robert McKinley, Region Director, Univ. of Texas at San Antonio, 1222 North Main Street, San Antonio, TX 78212, (210) 558–2450

Mr. John P. O'Connor, State Director, University of Connecticut, 2 Bourn Place, U–94, Storrs, CT 06269–5094, (203) 486–4135

Mr. Ted Cadou, Region Director, University of Houston, 1100 Louisiana, Suite 500, Houston, TX 77002, (713) 752–8444

Ms. Liz Klimback, Region Director, Dallas Community College, 1402 Corinth Street, Dallas, TX 75212, (214) 860–5833

Mr. Craig Bean, Region Director, Texas Tech University, 2579 South Loop 289, Suite 114, Lubbock, TX 79423–1637, (806) 745–3973

Mr. Raleigh Byars, State Director, University of Mississippi, Old Chemistry Building, University, MS 38677, (601) 232–5001

Mr. James L. King, State Director, State University of New York, SUNY Plaza, S–523, Albany, NY 12246, (518) 443–5398

Ms. Hazel Kroesser Palmer, State Director, West Virginia Development Office, 950 Kanawha Boulevard, East, Charleston, WV 25301, (304) 558–2960

Mr. Clinton Tymes, State Director, University of Delaware, Suite 005—Purnell Hall, Newark, DE 19711, (302) 831–2747

Ms. Janet Holloway, State Director, University of Kentucky, 225 Business & Economics Bldg., Lexington, KY 40506–0034, (606) 257–7668

Mr. Thomas McLamore, State Director, Department of Economic and Employment Development, 217 East Redwood St., 9th Floor, Baltimore, MD 21202, (410) 333–6995

Ms. Diane Wolverton, State Director, University of Wyoming, P.O. Box 3622, Laramie, WY 82071–3622, (307) 766–3505

Mr. Max Summers, State Director, University of Missouri, Suite 300, University Place, Columbia, MO 65211, (314) 882–0344

Ms. Holly Schick, State Director, Ohio Department of Development, 77 South High Street, Columbus, OH 43226–1001, (614) 466–2711

Mr. Donald L. Kelpinski, State Director, Vermont Technical College, P.O. Box 422, Randolph Center, VT 05060, (802) 728–9101

Mr. Chester Williams, Director, University of the Virgin Islands, 8000

Nisky Center, Suite 202, St. Thomas, US V. Islands 00802, (809) 776–3206

[FR Doc. 96–18536 Filed 7–19–96; 8:45 am]

BILLING CODE 8025–01–P

Clarksburg District Advisory Council Meeting; Public Meeting

The U.S. Small Business Administration, Clarksburg District Advisory Council will hold a public meeting on Thursday, August 15, 1996 at 10:00 a.m. at Eat'N Park Restaurant, 100 Tolley Street, Bridgeport, West Virginia, to discuss matters as may be presented by members, staff of the U.S. Small Business Administration, or others present.

For further information, write or call Mr. Thomas Tolan, Acting District Director, U.S. Small Business Administration, 168 West Main Street, Clarksburg, West Virginia 26301, (304) 623–5631.

July 16, 1996.

Michael P. Novelli,

Director, Office of Advisory Council.

[FR Doc. 96–18535 Filed 7–19–96; 8:45 am]

BILLING CODE 8025–01–P

COMMITTEE FOR THE IMPLEMENTATION OF TEXTILE AGREEMENTS

Amendment of Import Restraint Limits for Certain Cotton, Man-Made Fiber, Silk Blend and Other Vegetable Fiber Textile Products Produced or Manufactured in the United Arab Emirates

July 17, 1996.

AGENCY: Committee for the Implementation of Textile Agreements (CITA).

ACTION: Issuing a directive to the Commissioner of Customs amending limits.

EFFECTIVE DATE: July 23, 1996.

FOR FURTHER INFORMATION CONTACT: Janet Heinzen, International Trade Specialist, Office of Textiles and Apparel, U.S. Department of Commerce, (202) 482–4212. For information on the quota status of these limits, refer to the Quota Status Reports posted on the bulletin boards of each Customs port or call (202) 927–5850. For information on embargoes and quota re-openings, call (202) 482–3715.

SUPPLEMENTARY INFORMATION:

Authority: Executive Order 11651 of March 3, 1972, as amended; section 204 of the Agricultural Act of 1956, as amended (7 U.S.C. 1854).

In accordance with the Uruguay Round Agreements Act and the Uruguay Round Agreement on Textiles and Clothing (ATC), the current limits are being amended for certain textile products, produced or manufactured in the United Arab Emirates and exported during the period beginning on January 1, 1996 and extending through December 31, 1996. In accordance with the ATC, these amended limits are based on the limits notified to the Textiles Monitoring Body. These limits are amended because the United Arab Emirates is now a member of the World Trade Organization (WTO).

In the letter published below, the Chairman of CITA directs the Commissioner of Customs to amend the current limits for the period January 1, 1996 through December 31, 1996. Previous adjustments applied to the 1996 limits have been adjusted accordingly.

A description of the textile and apparel categories in terms of HTS numbers is available in the CORRELATION: Textile and Apparel Categories with the Harmonized Tariff Schedule of the United States (see Federal Register notice 60 FR 65299, published on December 19, 1995). Also see 61 FR 9982, published on March 12, 1996.

The letter to the Commissioner of Customs and the actions taken pursuant to it are not designed to implement all of the provisions of the Uruguay Round Agreements Act and the ATC, but are designed to assist only in the implementation of certain of their provisions.

Troy H. Cribb,

Chairman, Committee for the Implementation of Textile Agreements.

Committee for the Implementation of Textile Agreements

July 17, 1996.

Commissioner of Customs,

Department of the Treasury, Washington, DC 20229.

Dear Commissioner: This directive amends, but does not cancel, the directive issued to you on March 5, 1996, by the Chairman, Committee for the Implementation of Textile Agreements. That directive concerns imports of certain cotton, man-made fiber, silk blend and other vegetable fiber textile products, produced or manufactured in the United Arab Emirates and exported during the twelve-month period beginning on January 1, 1996 and extending through December 31, 1996.

Effective on July 23, 1996, you are directed, in accordance with the Uruguay Round Agreements Act and the Uruguay Round Agreement on Textiles and Clothing (ATC), to increase the limits for the following categories:

Category	Amended twelve-month limit [1]
219	1,175,312 square meters.
226/313	2,009,814 square meters.
315	–0–.
317	32,422,388 square meters.
326	1,897,268 square meters.
334/634	228,736 dozen.
335/635/835	157,146 dozen.
336/636	209,459 dozen.
338/339	624,450 dozen of which not more than 398,509 dozen shall be in Categories 338–S/339–S [2].
340/640	350,729 dozen.
341/641	321,604 dozen.
342/642	255,495 dozen.
347/348	463,877 dozen of which not more than 231,938 dozen shall be in Categories 347–T/348–T [3].
351/651	183,636 dozen.
352	232,892 dozen.
361	–0–.
363	6,324,225 numbers.
369–S [4]	84,069 kilograms.
369–O [5]	604,625 kilogams.
638/639	237,065 dozen.
647/648	343,321 dozen.
847	215,573 dozen.

[1] The limits have not been adjusted to account for any imports exported after December 31, 1995.

[2] Category 338–S: only HTS numbers 6103.22.0050, 6105.10.0010, 6105.10.0030, 6105.90.8010, 6109.10.0027, 6110.20.1025, 6110.20.2040, 6110.20.2065, 6110.90.9068, 6112.11.0030 and 6114.20.0005; Category 339–S: only HTS numbers 6104.22.0060, 6104.29.2049, 6106.10.0010, 6106.10.0030, 6106.90.2510, 6106.90.3010, 6109.10.0070, 6110.20.1030, 6110.20.2045, 6110.20.2075, 6110.90.9070, 6112.11.0040, 6114.20.0010 and 6117.90.9020.

[3] Category 347–T: only HTS numbers 6103.19.2015, 6103.19.9020, 6103.22.0030, 6103.42.1020, 6103.42.1040, 6103.49.8010, 6112.11.0050, 6113.00.9038, 6203.19.1020, 6203.19.9020, 6203.22.3020, 6203.42.4005, 6203.42.4010, 6203.42.4015, 6203.42.4025, 6203.42.4035, 6203.42.4045, 6203.49.8020, 6210.40.9033, 6211.20.1520, 6211.20.3810 and 6211.32.0040; Category 348–T: only HTS numbers 6104.12.0030, 6104.19.8030, 6104.22.0040, 6104.29.2034, 6104.62.2010, 6104.62.2025, 6104.69.8022, 6112.11.0060, 6113.00.9042, 6117.90.9060, 6204.12.0030, 6204.19.8030, 6204.22.3040, 6204.29.4034, 6204.62.3000, 6204.62.4005, 6204.62.4010, 6204.62.4020, 6204.62.4030, 6204.62.4040, 6204.62.4050, 6204.69.6010, 6304.69.9010. 6210.50.9060, 6211.20.1550, 6211.20.6810, 6211.42.0030 and 6217.90.9050.

[4] Category 369–S: only HTS number 6307.10.2005.

[5] Category 369–O: all HTS numbers except 6307.10.2005 (Category 369–S).

The Committee for the Implementation of Textile Agreements has determined that these actions fall within the foreign affairs exception to the rulemaking provisions of 5 U.S.C. 553(a)(1).

Sincerely,

Troy H. Cribb,

Chairman, Committee for the Implementation of Textile Agreements.

[FR Doc. 96–18489 Filed 7–19–96; 8:45 am]

BILLING CODE 3510–DR–F

DEPARTMENT OF TRANSPORTATION

Office of the Secretary

[Dockets OST–96–1384 and OST–96–1385]

Applications of United Parcel Service Co. for Issuance of New Certificate Authority

AGENCY: Department of Transportation.

ACTION: Notice of Order to Show Cause (Order 96–7–24).

SUMMARY: The Department of Transportation is directing all interested persons to show cause why it should not issue orders (1) finding United Parcel Service Co. fit, willing, and able, and (2) awarding it certificates to engage in interstate and foreign charter air transportation of persons, property, and mail.

DATES: Persons wishing to file objections should do so no later than August 1, 1996.

ADDRESSES: Objections and answers to objections should be filed in Dockets OST–96–1384 and OST–96–1385 and addressed to the Documentary Services Division (C–55, Room PL–401), U.S. Department of Transportation, 400 Seventh Street, SW., Washington, DC 20590 and should be served upon the parties listed in Attachment A to the order.

FOR FURTHER INFORMATION CONTACT: Ms. Janet A. Davis, Air Carrier Fitness Division (X–56, Room 6401), U.S. Department of Transportation, 400 Seventh Street, SW., Washington, DC 20590, (202) 366–9721.

Dated: June 16, 1996.

Patrick V. Murphy,

Deputy Assistant Secretary for Aviation and International Affairs.

[FR Doc. 96–18523 Filed 7–19–96; 8:45 am]

BILLING CODE 4910–62–P

Federal Aviation Administration

[AC 120–XX]

Proposed Advisory Circular (AC) 120–XX, Air Transportation Partnership for Safety Programs

AGENCY: Federal Aviation Administration (FAA), DOT.

ACTION: Notice of Proposed Advisory Circular (AC) 120–XX, and request for comments.

SUMMARY: This notice announces the publication of, and requests comments on, a proposed AC that provides guidance for establishing air transportation partnership for safety programs. These programs, which are entered into by the FAA and entities within the air transportation industry, are intended to generate safety information that may not otherwise be obtainable. The FAA is implementing a 2-year demonstration program for the use of these programs under which information can be collected and analyzed to measure the programs' effect on safety.

DATES: Comments must be received on or before August 21, 1996.

ADDRESSES: Send all comments on the proposed AC to: Federal Aviation Administration, Air Transportation Division, AFS–200, 800 Independence Avenue SW., Washington, DC 20591.

FOR FURTHER INFORMATION CONTACT: Kent Stephens, AFS–230, Federal Aviation Administration, P.O. Box 20034, Dulles International Airport, Washington, DC 20041, or telephone (703) 661–0333 x5131.

SUPPLEMENTARY INFORMATION: The proposed AC may be downloaded from the FedWorld BBS by dialing (703) 321–8020, ANSI, 8, 1, N, 9600 baud, or through the Internet at the following Uniform Resource Location (URL): flp://fwux.fedworld.gov/pub/faa/faa.htm. The file name is ''AC XX–XX.TXT.''

Comments Invited

Interested persons are invited to comment on the proposed AC by submitting such written data, views, or arguments as they may desire. Commenters should identify the AC, and submit comments, in duplicate, to the address specified above. All comments received on or before the closing date for comments will be considered by the Air Transportation Division, AFS–200, before issuing the final AC. Comments may be inspected at Federal Aviation Administration, Air Transportation Division, AFS–200, 800 Independence Ave., SW., Washington, DC 20591 between the hours of 9:00 a.m. and 4:00 p.m. weekdays, except Federal holidays.

Background

In recent years, the FAA and the air transportation industry have sought alternative means for addressing safety problems and identifying potential safety hazards. To this end, the FAA, in cooperation with industry, established several demonstration partnerships for safety programs in an effort to increase the flow of safety information to both the air carrier and FAA. Among these programs were the USAir Altitude Awareness Program, the American Airlines Safety Action Program (ASAP), and the Alaska Airlines Altitude Awareness Program. As an outcome of the Safety Conference held on January 9–10, 1995, the Secretary of Transportation and the Administrator of the Federal Aviation Administration (FAA) announced that standardized policy and procedures would be provided for the use of these programs. Following publication of a final AC, the FAA will amend appropriate agency orders to provide internal guidance for the development of partnership for safety programs.

Issued in Washington, DC, on July 17, 1996.

Thomas C. Accardi,

Director, Flight Standards Service.

The text of the proposed AC reads as follows:

1. *Purpose.* This advisory circular (AC) provides guidance for establishing air transportation partnership for safety programs (partnership for safety programs). As an outcome of the Safety Conference held on January 9–10, 1995, the Secretary of Transportation and the Administrator of the Federal Aviation Administration (FAA) announced that standardized policy and procedures would be provided for the use of these programs.

2. *Background.* In recent years, the FAA and the air transportation industry have sought alternative means for addressing safety problems and identifying potential safety hazards. To this end, the FAA, in cooperation with industry, established several demonstration partnership for safety programs in an effort to increase the flow of safety information to both the air carrier and FAA. Among these programs were the USAir Altitude Awareness Program, the American Airlines Safety Action Program (ASAP), and the Alaska Airlines Altitude Awareness Program. These programs included incentives to encourage employees of certificate holders participating in the programs to disclose information and identify possible violations of the Federal Aviation Regulations without fear of punitive legal enforcement sanctions. Events reported under a program that involved an alleged violation of the Federal Aviation Regulations by the certificate holder were handled under the voluntary disclosure policy, provided the elements of that policy

were satisfied. The FAA is expanding the use of partnership for safety programs through the implementation of a 2-year demonstration program under which information and data can be collected and analyzed to measure their effect on aviation safety.

3. *Key Terms.* The following key terms and phrases are defined to ensure a standard interpretation of the guidance in this AC:

a. *Administration Act.* Administrative action is a means for disposing of violations or alleged violations that do not warrant the use of legal enforcement sanctions. The two types of administrative action are a warning notice and a letter of correction:

b. *Air Carrier.* An air carrier is a person who undertakes directly by lease, or other arrangement, to engage in air transportation.

c. *Certificate Holder.* For purposes of partnership for safety programs, a certificate holder refers to a person authorized to operate under part 121 of the Federal Aviation Regulations or who holds a certificate issued under part 145 of the Federal Aviation Regulations.

d. *Certificate Holding District Office (CHDO).* The CHDO is the Flight Standards District Office (FSDO) having responsibility for the geographic area in which a certificate holder's principal base of operations is located.

e. *Enforcement-Related Incentive.* For purposes of partnership for safety programs, an enforcement-related incentive refers to an assurance that lesser enforcement action will be used to address certain alleged violations of the Federal Aviation Regulations to encourage participation by certificate holder employees.

f. *Major Domestic Repair Station.* For purposes of partnership for safety programs, a major domestic repair station refers to a part 145 repair station located in the United States certificated to perform airframe and/or engine work on transport category aircraft having a maximum takeoff gross weight of 75,000 lbs. or greater.

g. *Memorandum of Understanding.* For purposes of partnership for safety programs, memorandum of understanding (MOU) refers to the written agreement between two or more parties setting forth the purposes for, and terms of, a partnership for safety program.

h. *Party/Parties.* For purposes of partnership for safety programs, the terms ''party/parties'' refers to the certificate holder, the FAA, and any other person or entity (e.g., labor union or other industry or Government entity) that is a signatory to the MOU.

i. *Safety-Related Report.* A safety-related report refers to a written account of an event that involves an operational or maintenance issue related to safety of flight, reported through a partnership for safety program.

j. *Voluntary Disclosure Policy.* The voluntary disclosure policy is a policy under which part 121, 135, and 145 certificate holders may voluntarily report alleged violations of the Federal Aviation Regulations and develop corrective action satisfactory to the FAA to preclude their recurrence. Certificate holders who satisfy the elements of the voluntary disclosure policy, receive a letter of correction in lieu of civil penalty action. Voluntary disclosure reporting procedures are outlined in AC 120–56.

4. *Applicability.* Partnership for safety programs are intended for air carriers that operate under part 121 of the Federal Aviation Regulations. They are also intended for major domestic repair stations certificated under part 145 of the Federal Aviation Regulations. Partnership for safety programs are entered into voluntarily by the FAA, a certificate holder, and if appropriate, other parties.

5. *Development.* Certificate holders may develop programs and submit them to the FAA for review and acceptance in accordance with the guidance in this AC. The FAA will determine whether a program is accepted. The FAA may suggest that a certificate holder develop a partnership for safety program to resolve an identified safety problem.

6. *Resources.* A partnership for safety program can result in a significant commitment of resources by the parties to the program. During the development of a program, it is important that each party is willing to commit the necessary personnel, time, and monetary resources to support the program.

7. *Enforcement Policy.*

a. *Enforcement-Related Incentive.* Partnership for safety programs may include an enforcement-related incentive to encourage participation by certificate holder employees. Any enforcement-related incentive should be limited to that needed to achieve the desired goal and results of the program. Alleged violations of the Federal Aviation Regulations by certificate holder employees disclosed through safety-related reports will ordinarily be addressed with administrative action provided the alleged violations do not involve deliberate misconduct; a serious and substantial deviation from required conduct; criminal conduct; an accident; or conduct that demonstrates, or raises a question of, a lack of qualification. Alleged violations that involve deliberate misconduct; a serious and substantial deviation from required conduct; criminal conduct; an accident; and conduct that demonstrates, or raises a question of, a lack of qualification are excluded from a partnership for safety program. Any enforcement-related incentive will not apply to these violations. Failure of any individual to complete any corrective action in a manner acceptable to the FAA may result in the reopening of the case and referral of the alleged violation for legal enforcement action.

b. *Repeated Instances of Misconduct.* Notwithstanding the guidance in paragraph 205 of FAA Order 2150.3A, Compliance and Enforcement Program, repeated instances involving the same or similar type of misconduct previously addressed with administrative action under the program, may also be covered under the program. The determination whether a repeated violation will be covered under a program will be made by the FAA on a case-by-case basis, upon consideration of the facts and circumstances surrounding the violation.

c. *Use of Safety-Related Reports.* All safety-related reports should be fully evaluated and, to the extent appropriate, investigated by the FAA. Any safety-related report that concerns an alleged violation(s) that is excluded from partnership for safety programs, i.e., alleged violations involving deliberate misconduct; a serious and substantial deviation from required conduct; criminal conduct; an accident; or conduct that demonstrates, or raises a question of, a lack of qualification, will be referred to an appropriate office within the FAA for any additional investigation and reexamination and/or legal enforcement action, as appropriate. A closed case involving a violation addressed with the enforcement-related incentive, or for which no action is taken, may be reopened and appropriate legal enforcement action taken if evidence later is discovered that establishes that the violation should have been excluded from the program. For alleged violations not excluded under a partnership for safety program, neither administrative action nor punitive legal enforcement action will be taken against an individual for an alleged violation reported under the program unless there is sufficient evidence of the violation, other than the individual's safety-related report. ''Sufficient evidence'' means evidence gathered by an investigation not caused by, or otherwise predicated on, the individual's safety-related report.

d. *Violations of Certificate Holder.* Alleged violations of certificate holders

disclosed through a safety-related report under a partnership for safety program will be handled under the voluntary disclosure policy, provided the certificate holder voluntarily reports the alleged violations to the FAA and the other elements of that policy are met. (See AC 120–56 and FAA Order 2150.3A, Compliance and Enforcement Program, Compliance/Enforcement Bulletin No. 90–6).

e. *Examples.* The following are examples of events that might be reported under a partnership for safety program and the probable action that would be taken by the FAA for an alleged violation disclosed by the safety-related report.

(1) Examples of events where an alleged violation ordinarily would be addressed by the enforcement-related incentive.

(i) A pilot reports an altitude deviation where the aircraft was assigned by ATC to climb to an altitude of 10,000 ft. MSL, but actually levels off at 11,000 ft. MSL. Evidence of the violation, other than the safety-related report, (e.g., air traffic control tape, air traffic controller's statements) is gathered by an investigation not caused by, or otherwise predicated on, the filing of the safety-related report. The pilot's alleged violation does not involve conduct that is excluded from the partnership for safety program. The alleged violation therefore would be addressed by the enforcement-related incentive.

(ii) A repair station technician reports that he/she was assigned to accomplish a required inspection (RII); however, he/she inadvertently neglected to sign the check sheet that the inspection was completed. Evidence of the alleged violation, other than the technician's safety-related report, reveals that the inspection was accomplished and the check sheet was not signed. This evidence was gathered by an investigation not caused by, or otherwise predicated on, the filing of the safety-related report. The alleged violation does not involve conduct that is excluded from the partnership for safety program. The technician's alleged violation therefore would be addressed by the enforcement-related incentive.

(2) Examples of events involving an alleged violation that is excluded from the partnership for safety program and to which the enforcement-related incentive would not apply.

(i) A pilot submits a report indicating that after takeoff he/she operated an aircraft below an altitude of 1,000 ft. AGL over a congested area. Investigation of this event revealed that the aircraft was deliberately flown at an altitude of 500 ft. AGL over a city ten miles from the airport. Due to the deliberate nature of the pilot's conduct, it would not be covered under the partnership for safety program and the alleged violation would not be addressed by the enforcement-related incentive. The safety-related report would be referred for legal enforcement action.

(ii) A technician submits a report stating that he/she had used a lubricant other than what was stated in the maintenance manual for an engine valve installation. No authorized substitute lubricants were available. The investigation revealed that the technician intentionally used a substitute non-approved lubricant. These actions were not in accordance with the maintenance manual or company procedures. Because these actions were a substantial deviation from required conduct, and intentional, the technician's conduct would not be covered under the partnership for safety program and the alleged violation would not be addressed by the enforcement-related incentive. The safety-related report would be referred for reexamination and/or legal enforcement action.

(3) Example of an event where no action would be taken for an alleged violation disclosed through a safety-related report.

(i) A pilot reports an altitude deviation where the aircraft was assigned by ATC to climb to an altitude of 10,000 ft. MSL, but actually levels off at 11,000 ft. MSL. The only evidence of the deviation is the pilot's safety-related report filed under the partnership for safety program. Since the pilot's safety-related report will not be used as evidence to support taking punitive legal enforcement action or administrative action against the pilot, and no other evidence of the alleged violation is available, there is insufficient evidence to support a violation of the Federal Aviation Regulations. Therefore, the case would be closed with no action.

8. *Corrective Action.* The FAA will work with a certificate holder to develop acceptable corrective action that should be taken based on information obtained under a partnership for safety program. The decision to accept the corrective action implemented under a partnership for safety program in lieu of legal enforcement action remains solely with the FAA.

9. *Memorandum of Understanding (MOU).* The provisions of a partnership for safety program that is acceptable to the FAA should be set forth in a MOU signed by each party. A program will be implemented in accordance with the provisions of its MOU. A sample is provided in the appendix of this document. Each MOU will be based on the parties' different needs and purposes for a partnership for safety program.

a. The MOU should set forth the elements of the partnership for safety program, including at least the following:

(1) A statement of the essential safety information that is reasonably expected to be obtained through the program and the safety problem(s) that is reasonably expected to be addressed through the program.

(2) The benefits to be gained by the program.

(3) The duration of the program, which should be limited to the period of time needed to achieve the desired goals and benefits articulated in the program. Programs initially should have a duration of no longer than 1 year and should be reviewed prior to renewal.

(4) A process for timely reporting to the FAA all events disclosed under the program; procedures for the resolution of those events that are safety-related; and procedures for continuous tracking and analysis of safety-related events.

(5) Any enforcement-related incentive that is needed to achieve the desired goal and results of the program.

(6) The frequency of periodic reviews by the parties to determine whether the program is achieving the desired results. These reviews are in addition to any other review conducted by the FAA.

(7) A point of contact within each party who is responsible for oversight of the program.

(8) A process for training and distributing information about the program to certificate holder employees and procedures for providing feedback to individuals who make safety-related reports under the program.

b. The MOU also should address the following elements that will pertain to any partnership for safety program.

(1) The program can be terminated at any time by any party.

(2) Failure of any party to follow the terms of the agreement ordinarily will result in termination of the program.

(3) Failure of a certificate holder to follow through with corrective action acceptable to the FAA to resolve any safety deficiencies ordinarily will result in termination of the program.

(4) Modifications of the MOU must be approved by all parties.

(5) Termination or modification of a program will not adversely affect anyone who acted in reliance on the terms of a program in effect at the time of that action, i.e., when a program is

terminated all reports and investigations that were in progress will be handled under the provisions of the program until they are completed.

(6) Any enforcement-related incentive will not apply to alleged violations involving deliberate misconduct; a serious and substantial deviation from required conduct; criminal conduct; an accident; or conduct that demonstrates, or raises a question of, a lack of qualification.

c. The MOU must be signed by an authorized representative of each party. The MOU will be signed by the CHDO manager on behalf of the FAA after coordination with the Director, Flight Standards Service, AFS–1, and the Associate Administrator for Regulation and Certification, AVR–1.

10. *Acceptance/Renewal Procedures.*

a. The certificate holder should initially develop and present a program to the CHDO for review. The CHDO and the certificate holder will review it to ensure that it satisfies the guidance provided in this AC, FAA Order 2150.3A, Compliance and Enforcement Program, and Flight Standards handbooks for establishing a partnership for safety program. Prior to acceptance, a program will be reviewed to ensure that FAA resources are available to administer the program effectively. When the FAA determines that a program proposal requires excessive agency resources, a matter within the sole discretion of the FAA, it will suggest modifications to the program proposal or disapprove the proposal.

b. When the CHDO is satisfied that a program satisfies the guidance in this AC, FAA Order 2150.3A, Compliance and Enforcement Program, and Flight Standards handbook guidance, the CHDO manager will forward two copies of the MOU through the Flight Standards Division regional office to the appropriate headquarters program office(s), i.e., AFS–200 for operations programs and AFS–300 for airworthiness programs and repair station programs and to both offices for programs that encompass both operations and airworthiness. The program offices will review and forward the MOU to the Office of the Chief Counsel for appropriate legal review. All programs must receive final approval of the Director, Flight Standards Service, AFS–1, and Associate Administrator for Regulation and Certification, AVR–1. AFS–1 will indicate approval of the MOU by FAA memorandum to the CHDO Manager. Following approval by AFS–1 and AVR–1, the CHDO manager will sign the MOU on behalf of the FAA.

c. Program renewal will be handled in accordance with the guidance for the review and renewal of programs, provided in FAA Order 2150.3A, Compliance and Enforcement Program. The CHDO will forward its recommendation whether a program should be renewed, along with supporting information, in accordance with the procedures outlined in Flight Standards handbooks.

11. *Recordkeeping.* The parties should maintain those records necessary for a program's administration and evaluation.

Appendix 1. Sample Memorandum of Understanding (MOU)

This is a sample of a memorandum of understanding (MOU) for an air transportation partnership for safety program. It is for illustrative purposes; an actual MOU developed by a certificate holder may be different from this sample. An MOU should address the elements of a partnership for safety programs that are set forth in FAA guidance material.

Memorandum of Understanding

General

ABC Airlines, Inc. is a Federal Aviation Regulation part 121 domestic air carrier engaged in scheduled passenger operations within the United States, Mexico, and Canada. It also conducts passenger charter and cargo operations. ABC Airlines operates 100 turbojet aircraft and has over 3500 employees including 1100 flight crewmembers (pilots and flight engineers) represented by ABC pilot union.

Purpose

Over the past six months ABC Airlines has experienced an increase in certain types of incidents that have resulted in problems relating to safety of flight, including violations of the Federal Aviation Regulations by the company and its flight crewmembers. Such incidents have occurred during all phases of flight and have involved the following: noncompliance with air traffic control (ATC) clearances, e.g., routing, heading, and altitude deviations; runway and taxiway incursions; and departure without proper flight plan fuel onboard. To obtain valuable safety information that may lead to correcting these and other safety of flight problems, ABC Airlines is entering into a partnership for safety program with its flight crewmembers, represented by ABC pilot union, and the FAA. This memorandum of understanding (MOU) describes the provisions of the program. The objective of the program will be to gather safety information from the flight crewmembers that will focus on the incidents described above and to obtain information concerning any additional safety of flight item that a flight crewmember believes should be reported. The information will be analyzed in order to develop and implement solutions to safety problems identified under the program.

Benefits

The program will provide a voluntary, cooperative, non-punitive environment for the open reporting of safety of flight concerns. Through such reporting all parties will have access to valuable information that may not otherwise be obtainable. This information will be analyzed in order to develop corrective action to solve safety problems and minimize deviations from the Federal Aviation Regulations.

Applicability

The ABC Airlines Pilot Partnership Program (APPP) applies to all flight crewmember employees of ABC Airlines. Alleged violations of the Federal Aviation Regulations that involve deliberate misconduct; a serious and substantial deviation from required conduct; criminal conduct; an accident; or conduct that demonstrates, or raises a question of, a lack of qualification are excluded from the program. Repeated instances involving the same or similar type of misconduct previously addressed by the enforcement-related incentive may be covered under the program. The determination whether a repeated instance will be covered under the program will be made by the FAA on a case-by-case basis.

Apparent violations of the Federal Aviation Regulations by ABC Airlines that are discovered under this program will be handled under the voluntary disclosure policy, provided ABC Airlines voluntarily reported the alleged violations to the FAA and the other elements of that policy are met. (See AC 120–56 and FAA Order 2150.3A, Compliance and Enforcement Program, Compliance/Enforcement Bulletin No. 90–6). Any modifications of this MOU must be approved by all parties to the agreement.

Program Duration

The APPP is designed to identify and correct specific problems related to flight safety at ABC Airlines. The duration of the program will be 1 year, beginning the date it is implemented by the parties to this MOU. The program may be terminated at any time for any

reason by ABC Airlines, the FAA, or any other party. If the program is terminated, all safety-related reports that have been submitted will continue to be processed under the MOU in effect at the time of the program's termination. If necessary, the program may be renewed at the end of 1 year provided that a final review and analysis supports renewal of the program and all parties agree to renewal of the program. Failure of any party to follow the terms of the program ordinarily will result in termination of the program. Failure of ABC Airlines to follow through with corrective action to resolve any safety deficiencies ordinarily will result in termination of the program.

Reporting Procedures

When a pilot observes a safety problem or experiences an incident during flight, he/she should note the problem or incident and be able to describe it in enough detail so that it can be evaluated by a third party. For example, if the safety incident involves a deviation from an ATC clearance the pilot should note the date, time, place, altitude, flight number, and ATC frequency along with enough other information describing the incident and any perceived safety problem. After the trip sequence has ended for that day the pilot should complete ABC Airlines APPP form number 123 for each safety problem or incident (hereinafter referred to as ''report'') and submit it by company mail to the Director of Flight Operations, Attn: APPP Manager. This should be accomplished in a timely manner. In order for the flight crewmember who submitted the report to be covered under the partnership for safety program and eligible for any FAA enforcement-related incentive, the report must be mailed within 24 hours after the end of the flight sequence for the day of occurrence, absent extraordinary circumstances. For example, if the incident occurred at 14:00 Hrs. on Monday and the pilot completes his/her flight sequence for that day at 19:00 Hrs., the report should be mailed no later than 19:00 Hrs. the following day (Tuesday). In order for all flight crewmembers to be covered under the APPP for any regulatory violations resulting from an incident, they must all sign the same report or submit separate individual reports for the same incident. If the company mail system is not available to the flight crewmember at the time he/she needs to file a report, the crewmember may contact the APPP manager's office and file a report via fax or telephone.

Point of Contact

The Event Review Committee (ERC) will be comprised of the APPP manager, representing ABC Airlines Flight Department management; the APPP coordinator for ABC Pilot Union; and an FAA inspector from the FAA Certificate Holding Flight Standards District Office (CHDO) for ABC Airlines, or designees in their absence.

APPP Manager

When the report is received by the APPP manager, he/she will record the date and time of any incident described in the report and the date and time that the report was submitted through the company mail system. The APPP manager will enter the report, along with all of the supporting data, on the agenda for the next ERC meeting. Untimely reports may still be considered by the ERC if extraordinary circumstances precluded timely submission of the report, e.g., a flight crewmember became ill requiring hospitalization at the termination of the flight. In those cases, the report should be mailed via company mail as soon as is reasonably possible. The FAA representative to the ERC will determine whether a report is submitted in a timely manner. To confirm that a report has been received, the APPP manager will send a written receipt (ABC Airlines APPP form number 234) through the company mail system to each flight crewmember who submits a report. The receipt will confirm whether or not the report was determined to be timely. The APPP manager will serve as the focal point for information about, and inquiries concerning the status of, APPP reports, and for the coordination and tracking of recommendations.

Event Review Committee (ERC)

The ERC will review and analyze reports submitted by flight crewmembers under the program, identify actual or potential safety problems from the information contained in the reports, and propose solutions for those problems. The ERC is responsible for tracking the status of each APPP report and for providing feedback to the individual who submitted the report. It will also conduct a review of the program six months after its inception. This review is in addition to any other reviews conducted by the FAA. The ERC also will be responsible for preparing a final report on the program at its conclusion. If renewal of the program is anticipated, the ERC will prepare and submit that report to the FAA 60 days in advance of the termination date for the initial program.

ERC Process

The ERC will meet as necessary to review and analyze reports that will be listed on an agenda submitted by the APPP manager. The ERC will determine the time and place of the meeting. The ERC will meet at least twice a month; the frequency of meetings will be determined by the number of reports that have accumulated. It is anticipated that three types of reports will be submitted to the ERC: safety-related reports that appear to involve a violation(s) of the Federal Aviation Regulations; reports that are of a general safety concern but do not appear to involve a violation(s) of the Federal Aviation Regulations; and any other reports, e.g., reports involving catering and passenger ticketing issues. The ERC will forward non-safety reports to the appropriate ABC Airlines department head for his/her information and if possible, internal (ABC Airlines) resolution. For reports related to flight safety, including reports involving possible violations of the Federal Aviation Regulations, the ERC will analyze the report; conduct interviews of reporting crewmembers; and gather additional information concerning the matter described in the report, as necessary.

The ERC should also make recommendations to ABC Airlines for appropriate comprehensive fixes. Such comprehensive fixes might include changes to ABC Airlines procedures, aircraft equipment modifications, or additional training for a crewmember. Any recommended changes that affect ABC Airlines will be forwarded through the APPP manager to the appropriate department head for consideration and comment, and, if appropriate, implementation. The FAA will work with ABC Airlines to develop acceptable comprehensive fixes. The APPP manager will track the implementation of the recommended comprehensive fixes and report on the progress of the fixes to the ERC as part of the regular ERC meetings. Any recommended comprehensive fix that is not implemented should be recorded along with the reason it was not implemented.

FAA Enforcement

All reports submitted under the APPP that involve potential violations of the Federal Aviation Regulations will be referred to the FAA representative of the ERC for evaluation and, to the extent appropriate, investigation. The FAA representative will review the report

and determine whether the alleged violation is supported by sufficient evidence, other than the individual's safety-related report. ''Sufficient evidence'' means evidence gathered by an investigation not caused by, or otherwise predicated on, the individual's safety-related report. Alleged violations supported by such evidence will ordinarily be addressed with administrative action provided the alleged violations do not involve deliberate misconduct; a serious and substantial deviation from required conduct; criminal conduct; an accident; or conduct that demonstrates, or raises a question of, a lack of qualification. Administrative action has been determined to be a necessary enforcement-related incentive to achieve the desired results and goals of the program.

Alleged violations that involve deliberate misconduct; a serious and substantial deviation from required conduct; criminal conduct; an accident; or conduct that demonstrates, or raises a question of, a lack of qualification are wholly excluded from the APPP. Such violations will not be addressed with the enforcement-related incentive, i.e., administrative action. Safety-related reports that concern such violations will be referred to an appropriate office within the FAA for any additional investigation and reexamination and/or legal enforcement action, as appropriate.

In order for an alleged violation covered under the APPP to be addressed with administrative action, the elements of paragraph 205 of FAA Order 2150.3A must be satisfied, and the individual committing the alleged violation must agree to accomplish any corrective action determined appropriate by the FAA representative to the ERC. Notwithstanding the guidance in paragraph 205 of FAA Order 2150.3A, Compliance and Enforcement Program, however, repeated instances involving the same or similar type of misconduct previously addressed with administrative action under the APPP may also be covered under the program. The determination whether a repeated instance will be covered under the APPP will be made on a case-by-case basis by the FAA, upon consideration of the facts and circumstances surrounding the violation.

The ERC may review and discuss the evidence available to support an alleged violation reported under the APPP. The FAA representative to the ERC will determine the enforcement action, if any, that should be initiated for the alleged violation. The FAA will work with a certificate holder to develop acceptable comprehensive fixes for safety problems identified from information obtained under the APPP. The decision to accept the corrective actions implemented under a partnership for safety program in lieu of legal enforcement action remains solely with the FAA.

Employee Feedback

The APPP manager will publish a synopsis of the reports received from the flight crewmembers in the partnership for safety program section of the monthly ''ABC Airlines Employee Newsletter.'' The synopsis will include enough information so that reporting flight crewmembers can identify their reports. Employee names, however, will not be included in the synopsis. The outcome of each report will be published. Any employee who submitted a report may also contact the APPP manager to inquire about the status of his/her report.

Information and Training

The details of the APPP will be made available to all flight crewmembers and their supervisors by publication in Section 5 of the ABC Airlines flight crew operating manual. Each flight crewmember will receive written guidance outlining the details of the program at least two weeks before the program begins. Each flight crewmember also will receive additional instruction concerning the program during the next regularly scheduled recurrent training class. All new hire pilot employees will receive training on the program during initial training.

Recordkeeping

All official documents and records regarding this program will be kept by the APPP manager and made available to the parties to this agreement at their request. The ABC Airlines Pilot Union and FAA will maintain whatever records they deem necessary to meet their needs.

Signatories

_____

Director of Operations, ABC Airlines

_____

Date

_____

President, ABC Airlines Pilot Union

_____

Date

_____

Manager, FAA CHDO

_____

Date (End of draft AC)

[FR Doc. 96–18533 Filed 7–19–96; 8:45 am]

BILLING CODE 4910–13–M

Acceptance of Noise Exposure Maps, Laughlin/Bullhead International Airport, Bullhead City, AZ

AGENCY: Federal Aviation Administration, DOT.

ACTION: Notice.

SUMMARY: The Federal Aviation Administration (FAA) announces its determination that the Noise Exposure Maps submitted by the Mohave County Airport Authority, under the provisions of Title I of the Aviation Safety and Noise Abatement Act of 1979 (Public Law 96–193) and 14 CFR Part 150 are in compliance with applicable requirements.

EFFECTIVE DATE: The effective date of the FAA's acceptance of the Noise Exposure Maps for Laughlin/Bullhead International Airport, Bullhead City, Arizona is July 9, 1996.

FOR FURTHER INFORMATION CONTACT: Charles B. Lieber, Airport Planner, Airports, Airports Division, AWP–611.1, Federal Aviation Administration, Western-Pacific Region. Mailing address: P.O. Box 92007, Worldway Postal Center, Los Angeles, California 90009–2007. Telephone (310) 725–3614. Street address: 15000 Aviation Boulevard, Hawthrone, California 90261. Documents reflecting this FAA action may be reviewed at this same location.

SUPPLEMENTARY INFORMATION: This notice announces that the FAA finds that the Noise Exposure Maps submitted for Laughlin/Bullhead International Airport, Bullhead City, Arizona are in compliance with applicable requirements of Federal Aviation Regulations (FAR) Part 150, effective July 9, 1996.

Under Section 103 of the Aviation Safety and Noise Abatement Act of 1979 (hereinafter referred to as ''the Act''), an airport operator may submit to the FAA Noise Exposure Maps which meet applicable regulations and which depict noncompatible land uses as of the date of submission of such maps, a description of projected aircraft operations, and the ways in which such operations will affect such maps. The Act requires such maps to be developed in consultation with interested and affected parties in the local community, government agencies, and persons using the airport.

An airport operator who has submitted Noise Exposure Maps that are found by FAA to be in compliance with the requirements of FAR Part 150, promulgated pursuant to Title I of the Act, may submit a Noise Compatibility Program for FAA approval which sets

forth the measures the operator has taken or proposes for the reduction of existing noncompatible uses and for the prevention of the introduction of additional noncompatible uses.

The FAA has competed its review of the Noise Exposure Maps and supporting documentation submitted by the Mohave County Airport Authority. The specific maps under consideration are Exhibit 2G, ''1996 Aircraft Noise Exposure'' and Exhibit 2H ''2001 Aircraft Noise Exposure'' in the submission. The FAA has determined that these maps for Laughlin/Bullhead International Airport are in compliance with applicable requirements. This determination is effective on July 9, 1996. FAA's acceptance of an airport operator's Noise Exposure Maps is limited to a finding that the maps were developed in accordance with the procedures contained in Appendix A of FAR Part 150. Such acceptance does not constitute approval of the applicant's data, information or plans, or a commitment to approve a Noise Compatibility Program or to fund the implementation of that program.

If questions arise concerning the precise relationship of specific properties to noise exposure contours depicted on a Noise Exposure Map, submitted under Section 103 of the Act, it should be noted that the FAA is not involved in any way in determining the relative locations of specific properties with regard to the depicted noise contours, or in interpreting the Noise Exposure Maps to resolve questions concerning, for example, which properties should be covered by the provisions of Section 107 of the Act. These functions are inseparable from the ultimate land use control and planning responsibilities of local government. These local responsibilities are not changed in any way under FAR Part 150 or through FAA's review of the Noise Exposure Maps. Therefore, the responsibility for the detailed overlaying of noise exposure contours onto the map depicting properties on the surface rests exclusively with the airport operator which submitted those maps, or with those public agencies and planning agencies with which consultation is required under Section 103 of the Act. The FAA has relied on the certification by the airport operator, under Section 150.21 of FAR Part, that the statutory required consultation has been accomplished.

Copies of the Noise Exposure Maps and of the FAA's evaluation of the maps are available for examination at the following locations:

Federal Aviation Administration, 800 Independence Avenue, SW., Room 617, Washington, D.C. 20591

Federal Aviation Administration, Western-Pacific Region, Airports Division, Room 3012, 15000 Aviation Boulevard, Hawthorne, California 90261

Mr. Norm Hicks, Executive Director, Laughlin/Bullhead International Airport, 2750 Locust Boulevard, Bullhead City, Arizona 86430

Questions may be directed to the individual named above under the heading **FOR FURTHER INFORMATION CONTACT.**

Issued in Hawthorne, California on July 9, 1996.

Robert C. Bloom,

Acting Manager, Airports Division, AWP–600, Western-Pacific Region.

[FR Doc. 96–18549 Filed 7–19–96; 8:45 am]

BILLING CODE 4910–13–M

Proposed Revisions of the San Francisco Class B Airspace Area, and the Oakland and San Jose Class C Airspace Areas, CA; Public Meetings

AGENCY: Federal Aviation Administration (FAA).

ACTION: Notice of public meeting.

SUMMARY: This notice announces several fact-finding informal airspace meetings to solicit information from airspace users, and others, concerning proposals to revise the Class B airspace at San Francisco, CA, and the Class C airspace at Oakland and San Jose, CA. The purpose of these meetings is to provide interested parties the opportunity to present views, recommendations, and comments on these proposals. All comments received during the meetings will be considered prior to any revisions or issuances of notices of proposed rulemaking.

DATES: The informal airspace meetings will be held on Wednesday, September 4, 1996, Tuesday, September 10, 1996, September 17, 1996, and Tuesday, September 24, 1996, starting at 7:00 p.m. Comments must be received on or before November 25, 1996.

Date: September 4, 1996.
Place: San Jose City Counsel Chambers, 801 N. First Street, 2nd Floor, San Jose, CA.

Date: September 10, 1996.
Place: Holiday Inn Concord, 1050 Burnett Ave., Concord, CA.

Date: September 17, 1996,
Place: U.S. Coast Guard, Gresham Hall, Building 4, Alameda, CA.

Date: September 24, 1996.
Place: Lucaessi Park, 320 N. McDowell Blvd., Petaluma, CA.

COMMENTS: Send or deliver comments on the proposal in triplicate to: Manager, Air Traffic Division, AWP–500, Federal Aviation Administration, P.O. Box 92007, World Postal Center, Los Angeles, CA 90009.

FOR FURTHER INFORMATION CONTACT: William Buck, Air Traffic Division, AWP–530, FAA, Western-Pacific Regional Office, telephone (310) 725–6556.

SUPPLEMENTARY INFORMATION:

Meeting Procedures

The following procedures will be used to facilitate the meetings:

(a) The meetings will be informal in nature and will be conducted by a representative of the FAA Western-Pacific Region. Representative from the FAA will present a formal briefing on the proposed revisions of the Class B and Class C airspace areas. Each participant will be given an opportunity to deliver comments or make a presentation.

(b) The meetings will be open to all persons on a space-available basis. There will be no admission fee or other charge to attend and participate.

(c) Any person wishing to make a presentation to the FAA panel will be asked to sign in and estimate the amount of time needed for such presentation. This will permit the panel to allocate an appropriate amount of time for each presenter.

(d) The meeting will not be adjourned until everyone on the list has had an opportunity to address the panel.

(e) Position papers or other handout material relating to the substance of the meeting will be accepted. Participants wishing to submit handout material should present *three* copies to the presiding officer. These should be additional copies of each handout available for other attendees.

(f) The meetings will not be formally recorded. However, a summary of the comments made at the meeting will be filed in the docket.

Agenda for the Meetings

Opening Remarks and Discussion of Meeting Procedures.
Briefing on Background for Proposals.
Public Presentations.
Closing Comments.

Issued in Washington, DC, on July 15, 1996.

Harold W. Becker,

Acting Program Director for Air Traffic Airspace Management.

[FR Doc. 96–18550 Filed 7–19–96; 8:45 am]

BILLING CODE 4910–13–M

Surface Transportation Board [1]

[STB Finance Docket No. 32992]

Varlen Corporation—Acquisition of Control Exemption—Commonwealth Railway, Inc., Carolina Coastal Railway, Inc., and Talleyrand Terminal Railroad Company, Inc.

Varlen Corporation (Varlen), a noncarrier, has filed a notice of exemption to acquire control of Commonwealth Railway, Inc. (CRI), Carolina Coastal Railway, Inc. (CCR), and Talleyrand Terminal Railroad Company, Inc. (TTR), through its acquisition pursuant to the anticipated success of a tender offer for a controlling percentage of the stock of Brenco, Incorporated (Brenco), a noncarrier, and, indirectly, its wholly owned subsidiary Rail Link, Inc., which is the parent noncarrier holding company of CRI, CCR, and TTR. Following a successful tender offer, Brenco would be merged with BAS, Inc. (BAS),[2] an existing, wholly owned subsidiary of Varlen. The transaction was to be consummated on or after the July 3, 1996 effective date of the exemption.

Varlen states that: (1) these railroads do not connect with each other; (2) the acquisition of control is not part of a series of anticipated transactions that would connect the railroads with each other or any railroad in their corporate family; and (3) the transaction does not involve a Class I carrier. Therefore, the transaction is exempt from the prior approval requirements of 49 U.S.C. 11323. See 49 CFR 1180.2(d)(2).

Under 49 U.S.C. 10502(g), the Board may not use its exemption authority to relieve a rail carrier of its statutory obligation to protect the interests of its employees. Section 11326(c), however, does not provide for labor protection for transactions under sections 11324 and 11325 that involve only Class III railroad carriers. Because this transaction involves Class III rail carriers only, the Board, under the statute, may not impose labor protective conditions for this transaction.

Petitions to revoke the exemption under 49 U.S.C. 10502(d) may be filed at any time. The filing of a petition to revoke will not automatically stay the transaction.

An original and 10 copies of all pleadings, referring to STB Finance Docket No. 32992, must be filed with the Surface Transportation Board, Office of the Secretary, Case Control Branch, 1201 Constitution Avenue, N.W., Washington, DC 20423 and served on: Kelvin J. Dowd, Slover & Loftus, 1224 Seventeenth Street, NW, Washington, DC 20036.

Decided: July 12, 1996.

By the Board, David M. Konschnik, Director, Office of Proceedings.

Vernon A. Williams,

Secretary.

[FR Doc. 96–18519 Filed 7–19–96; 8:45 am]

BILLING CODE 4915–00–P

[1] The ICC Termination Act of 1995, Pub. L. No. 104–88, 109 Stat. 803, which was enacted on December 29, 1995, and took effect on January 1, 1996, abolished the Interstate Commerce Commission and transferred certain functions to the Surface Transportation Board (Board). This notice relates to functions that are subject to Board jurisdiction pursuant to 49 U.S.C. 11323.

[2] BAS is not a rail carrier and does not control any rail carriers.

DEPARTMENT OF THE TREASURY

Submission for OMB Review; Comment Request

July 16, 1996.

The Department of Treasury has submitted the following public information collection requirement(s) to OMB for review and clearance under the Paperwork Reduction Act of 1995, Public Law 104–13. Copies of the submission(s) may be obtained by calling the Treasury Bureau Clearance Officer listed. Comments regarding this information collection should be addressed to the OMB reviewer listed and to the Treasury Department Clearance Officer, Department of the Treasury, Room 2110, 1425 New York Avenue, NW., Washington, DC 20220.

Customs Service (CUS)

OMB Number: 1515–0051.

Form Number: CF 7523.

Type of Review: Extension.

Title: Entry and Manifest of Merchandise Free of Duty, Carrier's Certificate and Release.

Description: Customs Form 7523 is used by carriers and importers as a manifest for the entry of merchandise free of duty under certain conditions and by Customs to authorize the entry of such merchandise. It is also used by carriers to show that the articles being imported are to be released to the importer or consignee.

Respondents: Business or other for-profit, Not-for-profit institutions.

Estimated Number of Respondents: 4,950.

Estimated Burden Hours Per Respondents: 5 minutes.

Frequency of Response: On occasion.

Estimated Total Reporting Burden: 8,247 hours.

OMB Number: 1515–0181.

Form Number: None.

Type of Review: Extension.

Title: Line Release Regulations.

Description: Line release was developed to release and track high volume and repetitive shipments using bar code technology and PCS. An application is submitted to Customs by the filer and a common commodity classification code (C4) is assigned to the application.

Respondents: Not-for-profit institutions.

Estimated Number of Respondents: 257.

Estimated Burden Hours Per Respondent: 15 minutes.

Frequency of Response: On occasion.

Estimated Total Reporting Burden: 6,425 hours.

Clearance Officer: J. Edgar Nichols (202) 927–1426, U.S. Customs Service, Printing and Records Management Branch, Room 6216, 1301 Constitution Avenue, NW., Washington, DC 20229.

OMB Reviewer: Milo Sunderhauf (202) 395–7340, Office of Management and Budget, Room 10226, New Executive Office Building, Washington, DC 20503.

Dale A. Morgan,

Departmental Reports Management Officer.

[FR Doc. 96–18520 Filed 7–19–96; 8:45 am]

BILLING CODE 4820–02–P

Corrections

Federal Register
Vol. 61, No. 141
Monday, July 22, 1996

This section of the FEDERAL REGISTER contains editorial corrections of previously published Presidential, Rule, Proposed Rule, and Notice documents. These corrections are prepared by the Office of the Federal Register. Agency prepared corrections are issued as signed documents and appear in the appropriate document categories elsewhere in the issue.

DEPARTMENT OF AGRICULTURE

Rural Utilities Service

7 CFR Part 1703

RIN 0572-AB22

Distance Learning and Telemedicine Grant Program

Correction

In rule document 96–16322 beginning on page 33622 in the issue of Thursday, June 27, 1996, make the following corrections:

1. On page 33622, in the second column, in the last full paragraph, in the fifth line, ''restructed'' should read ''restructured''.
2. On the same page, in the third column, in the first full paragraph, in the ninth line, ''comenters'' should read ''commenters''.
3. On the same page, in the same column, in the last full paragraph, in the eighth line, insert ''in'' after ''discussion''.
4. On page 33623, in the first column, in the first full paragraph, in the fourth line, ''of'' should read ''or'' and in the eighth line, ''many'' should read ''may''.
5. On the same page, in the third column, in the third line from the bottom, ''he'' should read ''the''.
6. On page 33624, in the first column, in the fourth paragraph, in the fifth line, ''applicant'' should read ''applicants''.
7. On the same page, in the second column, in the fifth paragraph, in the last line, ''requirement'' should read ''requirements''.
8. On the same page, in the third column, in the fourth paragraph, in the third line, ''finding'' should read ''funding''.
9. On page 33625, in the first column, in the second paragraph, in the second line, insert ''to'' after ''points''.
10. On page 33626, in the second column, in the table of contents of subpart D, ''Apprendix A'' should read ''Appendix A''.

§1703.104 [Corrected]

11. On page 33629, in the first column, in §1703.104(d), in the second line, ''of'' should read ''or'' and insert ''in'' after ''construction''
12. On the same page, in the same column, in §1703.104(g), in the third line, ''an'' should read ''and''.

§1703.105 [Corrected]

13. On page 33629, in the second column, in §1703.105(a)(11), in the second line, ''of'' should read ''or'' and ''building'' should read ''buildings''.

§1703.107 [Corrected]

14. On page 33631, in the first column, in §1703.107(e)(5), in the second line, insert ''systems'' after ''school''.
15. On the same page, in the same column, in §1703.107(g), in the last line, ''purposed'' should read ''proposed''.
16. On the same page, in the second column, in §1703.107(j)(1), in the last line, ''for'' should read ''from''.

§1703.117 [Corrected]

17. On page 33633, in the first column, in §1703.117(c)(1)(i), in the first line, insert ''or'' after ''than''.
18. On the same page, in the same column, in §1703.117(c)(1)(v), in the first line, ''100'' should read ''110''.
19. On the same page, in the second column, in §1703.117(d)(1)(i), in the second line, ''nor'' should read ''or''.
20. On the same page, in the third column, in §1703.117(d)(2)(i)(C), ''Grater'' should read ''Greater'' and in the third line, ''suppled'' should read ''supplied''.
21. On the same page, in the same column, in §1703.117(e)(2)(i), in the third line, ''and'' should read ''an''.
22. On page 33634, in the first column, in §1703.117(e)(7), in the first line, ''users'' should read ''user''.

§1703.126 [Corrected]

23. On page 33636, in the first column, in §1703.126(b)(1), paragraph ''(a)'' should read ''(1)''.

§1703.128 [Corrected]

24. On page 33636, in the third column, in §1703.128, in the first line, ''Program'' should read ''Programs''.

§1703.140 [Corrected]

25. On page 33637, in the first column, in the section heading, ''telecommunication'' should read ''telecommunications''.
26. On the same page, in the same column, in §1703.140(a)(2), in the fourth line, ''telecommunication'' should read ''telecommunications''.

Appendix A to Subpart D of Part 1703 [Corrected]

27. On page 33637, in the second column, in appendix A, under *Nonmetropolitan Counties:*, in line 6, ''of''should read ''to'' after ''2,500''.
28. On page 33638, in the third column, in the FR Doc. line, ''96-16321'' should read ''96-16322''.

BILLING CODE 1505–01–D

federal register

Monday
July 22, 1996

Part II

Department of Justice

Office of the Attorney General

28 CFR Part 38

Architectural and Transportation Barriers Compliance Board

36 CFR Part 1191

Americans With Disabilities Act Accessibility Guidelines for Buildings and Facilities; Children's Facilities; Proposed Rule

DEPARTMENT OF JUSTICE

Office of the Attorney General

28 CFR Part 38

[Order No. 2042–96]

Architectural and Transportation Barriers Compliance Board

36 CFR Part 1191

[Docket No. 94–2]

RIN 3014–AA17

Americans With Disabilities Act Accessibility Guidelines for Buildings and Facilities; Children's Facilities

AGENCIES: Architectural and Transportation Barriers Compliance Board and Department of Justice.

ACTION: Joint notice of proposed rulemaking.

SUMMARY: The Architectural and Transportation Barriers Compliance Board (Access Board) proposes to amend the Americans with Disabilities Act Accessibility Guidelines (ADAAG) by adding a special application section for children's facilities. The section contains guidelines based on children's dimensions and anthropometrics for newly constructed and altered children's facilities. The section would ensure that newly constructed and altered children's facilities are readily accessible to and usable by children with disabilities.

The Department of Justice proposes to amend its regulations implementing the Americans with Disabilities Act (ADA) by adding to its Standards for Accessible Design the special application section for children's facilities proposed by the Access Board.

DATES: Comments should be received by October 21, 1996. Comments received after this date will be considered to the extent practicable.

ADDRESSES: Comments should be sent to the Office of Technical and Information Services, Architectural and Transportation Barriers Compliance Board, 1331 F Street NW., suite 1000, Washington, DC 20004–1111. The Access Board will provide copies of all comments received to the Department of Justice. Comments will be available for inspection at the above address from 9:00 a.m. to 5:00 p.m. on regular business days. For information about availability of copies and electronic access, see the beginning of **SUPPLEMENTARY INFORMATION.**

FOR FURTHER INFORMATION CONTACT: Access Board: Marsha K. Mazz, Office of Technical and Information Services, Architectural and Transportation Barriers Compliance Board, 1331 F Street NW, suite 1000, Washington, DC 20004–1111. Telephone (202) 272–5434 ext. 21 or (800) 872–2253 ext. 21 (voice), and (202) 272–5449 (TTY) or (800) 993–2822 (TTY).

Department of Justice: John L. Wodatch, the ADA information line, Disability Rights Section, Civil Rights Division, U.S. Department of Justice, Washington, DC 20530. Telephone (800) 514–0301 (voice) or (800) 514–0383 (TTY).

SUPPLEMENTARY INFORMATION:

Availability of Copies and Electronic Access

Single copies of this publication may be obtained at no cost by calling the Access Board's automated publications order line (202) 272–5434 or (800) 872–2253, by pressing 1 on the telephone keypad, then 1 again, and requesting publication S25 (Children's Facilities Notice of Proposed Rulemaking). Persons using a TTY should call (202) 272–5449 or (800) 993–2822. Please record a name, address, telephone number and request publication S25. Persons who want a copy in an alternate format should specify the type of format (audio cassette tape, braille, large print, or computer disk).

The proposed rule is available on electronic bulletin board at (202) 272–5448 (Access Board) and (202) 514–6193 (Department of Justice). This rule is also available on the Internet. It can be accessed with gopher client software (gopher.usdoj.gov), through other gopher servers using the University of Minnesota master gopher (under North America, USA, All, Department of Justice), with World Wide Web software (http://www.usdoj.gov), or through the White House WWW server (http://www.whitehouse.gov).

Background

The Access Board is responsible for developing accessibility guidelines under the ADA to ensure that new construction and alterations of facilities covered by titles II and III of the Act are readily accessible to and usable by individuals with disabilities.[1] The Access Board initially issued the Americans with Disabilities Act Accessibility Guidelines (ADAAG) in 1991 (36 CFR part 1191, appendix A) and has amended the guidelines four times, most recently in 1994. See 59 FR 31676 (June 20, 1994). ADAAG consists of general sections (ADAAG 1 to 4) that apply to all types of buildings and facilities, and special application sections (ADAAG 5 to 14) that contain additional requirements for certain types of buildings.[2]

Under the ADA, the Department of Justice is responsible for issuing regulations to implement titles II and III of the Act. The Department of Transportation is responsible for issuing regulations to implement the transportation provisions of titles II and III of the ADA. The regulations issued by the Department of Justice and Department of Transportation must include accessibility standards for newly constructed and altered facilities covered by titles II and III of the ADA. The standards must be consistent with the accessibility guidelines issued by the Access Board. The Department of Justice has adopted ADAAG as its Standards for Accessible Design, published as appendix A to 28 CFR part 36; and the Department of Transportation has also adopted ADAAG as its accessibility standards, published at appendix A to 49 CFR part 37.[3]

The Access Board proposes to add a new special application section to ADAAG (section 15) for newly constructed and altered children's facilities. Section 15 contains design and construction guidelines based on children's dimensions and anthropometrics. Section 15 does not address play settings and fixed play equipment for children. These facilities will be addressed by the Access Board in a separate rulemaking on recreation facilities.

The Department of Justice proposes to amend its regulations implementing

1 The ADA (42 U.S.C. 12101–12213) is a comprehensive civil rights law which prohibits discrimination on the basis of disability. Titles II and III of the ADA require, among other things, that newly constructed and altered State and local government buildings, places of public accommodation, and commercial facilities be readily accessible to and usable by individuals with disabilities.

2 The special application sections cover the following buildings and facilities: restaurants and cafeterias (ADAAG 5); medical care facilities (ADAAG 6); business, mercantile and civic (ADAAG 7); libraries (ADAAG 8); transient lodging (ADAAG 9); transportation facilities (ADAAG 10); judicial, legislative, and regulatory facilities (ADAAG 11); detention and correctional facilities (ADAAG 12); accessible residential housing (ADAAG 13); and public rights-of-way (ADAAG 14).

3 The Department of Justice's and Department of Transportation's regulations currently include ADAAG 1 to 10. On June 20, 1994, the Department of Justice and Department of Transportation proposed to add ADAAG 11 to 14 to their regulations. See 59 FR 31808 and 31818 (June 20, 1994). The Department of Justice further proposed to move its Standards for Accessible Design from 28 CFR part 36, appendix A to 28 CFR part 37, appendix A. The Department of Justice subsequently assigned another set of regulations to 28 CFR part 37 and now proposes to move its standards to 28 CFR part 38, appendix A.

titles II and III of the ADA by adding section 15 to its Standards for Accessible Design.

Section 15 generally modifies current ADAAG technical requirements for children's facilities. It does not broaden the application of ADAAG and applies to those facilities already covered by titles II and III of the ADA. Section 15 generally does not increase the number of accessible elements and features required by current ADAAG. For example, the number of toilet rooms or toilets required to be accessible by ADAAG is not changed. Rather, where a toilet room is required to be accessible, and it is constructed according to children's dimensions and anthropometrics instead of adults', the applicable technical requirements in section 15 modify those currently in ADAAG. Other ADAAG sections not specifically referenced in section 15 shall be applied to children's facilities without modification or addition.

State and local laws and codes, as well as best practices, often recognize the need for certain facilities to be constructed according to children's dimensions and anthropometrics, rather than adults'. Typically, this need occurs where children will be the primary users of a facility, such as in child care centers and elementary schools. Some state and local laws and codes either require or recommend the application of design guidelines specifically suited to serve children. Those design guidelines may, for example, specify lower mounting heights for elements used primarily by children such as drinking fountains, lavatories and toilets. In the absence of mandatory or recommended design guidelines for children, best practices are often applied that consider that certain elements in the built environment should be usable by children rather than adults. With respect to the design and construction of buildings, the term ''best practices'' generally refers to design criteria or methods of construction that have been developed over time by designers and builders and that in their professional judgment and experience are best applied in situations where no formal guidance (e.g., code or regulation) exists. While state and local laws and codes may contain guidelines for children, only a few contain guidelines that address accessibility for children with disabilities.

Current ADAAG contains specifications that are based on adult dimensions and anthropometrics. Although ADAAG applies to child care centers, pre-kindergarten and elementary schools and other children's facilities, it does not currently contain requirements that specifically address access for children. Applying specifications that serve adults to facilities for children may conflict with state and local codes or best practices that require or recommend the application of specifications based on children's sizes and dimensions. For example, a code or best practice may specify a lower seat height for toilets serving children, while ADAAG specifies a seat height suitable for adults with disabilities. Alternatives to ADAAG specifications, such as a lower toilet seat height, may be permitted under ADAAG 2.2 (Equivalent Facilitation). Equivalent facilitation allows departures from specific requirements so long as greater or equal access is provided. While equivalent facilitation may provide flexibility in the use of ADAAG, it does not provide specific guidance in designing facilities accessible to children. It is clear from technical inquiries to the Access Board that such guidance is needed in the form of design guidelines based on children's dimensions and anthropometrics, grasp, strength, and stamina.

This proposed rule does not create an obligation for covered entities to construct facilities with elements that are constructed according to children's dimensions and anthropometrics. The proposed rule is intended only to meet the expressed need for guidelines and standards for providing accessibility in buildings and facilities that a covered entity constructs according to children's dimensions and anthropometrics.

In 1986, the Access Board issued ''Recommendations for Accessibility Guidelines to Serve Physically Handicapped Children in Elementary Schools.''[4] The report included recommended modifications or additions to certain sections of the Uniform Federal Accessibility Standards (UFAS) based on children's sizes. The recommendations were developed to assist states in designing and constructing accessible elementary schools. Many states and localities have applied the Access Board's 1986 children's recommendations to newly constructed schools serving grades one through six.

Subsequently, the Access Board sponsored a research project to study accessibility requirements for children with disabilities using a variety of facilities. The research project, conducted by the Center for Accessible Housing (CAH) at North Carolina State University in Raleigh, North Carolina, resulted in the development of recommendations for children's access in 1992. The research included a review of codes, standards and guidelines, ergonomic studies and evaluation literature, and post-occupancy evaluations of children's facilities. This research was the basis for the CAH recommended accessibility guidelines for children's facilities known as ''Recommendations for Accessibility Standards for Children's Environments'' (also referred to as the CAH ''recommendations'' or ''study'' in this notice).[5] The CAH study focused on facilities serving pre-kindergarten and elementary school-aged children and, to a lesser extent, facilities serving infants and toddlers.

On February 3, 1993, the Access Board published an advance notice of proposed rulemaking (ANPRM) in the Federal Register (58 FR 6924). The ANPRM sought comment on general issues, such as the recommended scope of these guidelines and the ages or grades that should be covered. The ANPRM also requested information on standards and guidelines for children's environments currently in use, building products and technologies currently available that specifically serve children, and elements and features unique to children's environments that may merit specific attention. Approximately 75 comments were received in response to this notice. Commenters included state and local departments of education, groups representing children with disabilities, plumbing fixture manufacturers, individuals, and design professionals. These comments are further discussed in the section-by-section analysis that follows. A number of commenters raised operational or programmatic issues and recommended that the guidelines address adult supervision of children, including the adult-to-child ratio, and the provision of personal care and assistance. Under the ADA, the Access Board is responsible for issuing accessibility guidelines for buildings and facilities. The Department of Justice, not the Access Board, has the authority to address programs or services provided by an entity covered

[4] A print or microfiche copy of the full report may be ordered from the National Technical Information Services (NTIS) by writing to: NTIS, 5285 Port Royal Road, Springfield, VA 22161, or calling (703) 487–4650. The publication number is PB94–204930, and the cost for the print copy is $17.20. Free copies of the full report on computer disk can be ordered from the Access Board. An executive summary of this report is also available at no cost from the Access Board.

[5] A print or microfiche copy of the report may be ordered from NTIS. The publication number is PB93–208676, and the cost for the print copy is $52.00. A copy of the study on computer disk can be ordered from the Access Board.

by the ADA. Further, many of the program and service issues raised by commenters to the ANPRM are addressed by federal, state and local law and regulation.

Section-by-Section Analysis

This section of the preamble contains a concise summary of the additions which the Access Board is proposing to ADAAG, and a summary of the Access Board's responses to certain comments received on the ANPRM. The text of the proposed common rule follows this section. Paragraphs marked with an asterisk have related, non-mandatory material in the Appendix.

Question 1: With the exception of additional handrails required on ramps or stairs (15.4), this rule generally proposes to modify, or questions whether to modify, current ADAAG provisions when designing and constructing children's facilities. Considering that facilities covered by this rule are already subject to the scoping and technical provisions in current ADAAG, the Access Board and the Department of Justice are seeking additional information or data that would assist in estimating the costs and benefits of the proposed rule.

15. Children's Facilities

15.1* Application

Section 15 applies to those facilities constructed according to children's dimensions and anthropometrics. The ANPRM asked whether the proposed guidelines for children's facilities should be limited to facilities where children are the majority user population served. Most commenters responded that the guidelines should apply broadly to facilities serving the public, such as libraries, theaters, community centers, shopping malls, pools, and gymnasiums. Other commenters, however, recommended that the application of the guidelines should be limited to those facilities that are specifically designed for use by children such as educational and child care facilities.

Generally, building codes and best practices specify that elements and features be provided at heights and locations appropriate for the primary user population served. Although children are rarely the sole occupants or users of a facility, codes and best practices often specify that elements such as drinking fountains, lavatories and toilet seats be mounted at heights according to children's size and reach when children are the primary users. Where a facility is constructed to serve children, section 15 requires that certain elements and features be readily accessible to and usable by children with disabilities. Therefore, section 15 applies only where facilities, or portions of facilities, are constructed according to children's dimensions and anthropometrics.

The phrase ''constructed according to children's dimensions and anthropometrics'' means where the construction of a facility reflects the size and dimensions, reach ranges, level of strength and stamina, and other characteristics of children, thus rendering such a facility more usable by children. Facilities constructed that do not reflect children's characteristics are not covered by section 15.

The ANPRM asked what ages or grades should be covered by the guidelines. Few comments were received in response to this question. With respect to age, the comments received covered a broad spectrum of ages from birth to age 21, with a small majority of the comments recommending a range of 3 to 13 years of age. Those commenters favoring criteria based on grades, recommended application of the guidelines to facilities which serve kindergarten through eighth grade. Additionally, some commenters stated that pre-schoolers, including toddlers, should also be covered. However, the age used to define a kindergartner, preschooler or toddler varied among jurisdictions as did age requirements for particular grades. These inconsistencies made it difficult to base the application of the guidelines on grade classification or other commonly used nomenclature.

The proposed rule is intended to cover facilities which are constructed according to children's dimensions and anthropometrics for ages 2 through 12. The dimensions and anthropometrics of children aged 2 and older are reflected in many existing state and local education or building design guidelines and recommendations. Those requirements specify that certain elements intended for children's use be designed and constructed for their use rather than for adult use. With respect to schools or portions of schools primarily serving children over 12 years of age, most states apply design standards based on adult dimensions and sizes, rather than children's.

Section 15.1 also specifies that accessible elements and spaces constructed according to children's dimensions and anthropometrics for ages 2 through 12 shall be on an accessible route complying with ADAAG 4.3 (Accessible Route), 15.3 (Protruding Objects) and 15.4 (Handrails at Ramps and Stairs). For example, a children's area in a portion of a community center may have elements and features constructed primarily for children such as storage units, toilets, or lavatories. Objects that project from walls along the accessible route are subject to the provisions covering protruding objects in section 15.3. Where the accessible route serving a covered children's area includes a ramp, section 15.4 specifies that a second set of handrails for children must be provided. An accessible route complying with this section shall also be provided where individual elements are positioned at heights or locations based on children's sizes and dimensions, such as a drinking fountain in a shopping mall. Additional routes serving the children's area are not subject to the requirements in this section. A note has been included in the appendix illustrating the requirements of accessible routes serving areas and spaces constructed according to children's dimensions and anthropometrics.

Question 2: Should the requirement for an accessible route complying with section 15.3 (Protruding Objects) and section 15.4 (Handrails on Ramps and Stairs) apply where only one element is constructed according to children's dimensions and anthropometrics (e.g., an accessible drinking fountain at a child's height)? Or, would it be more appropriate to limit the application of an accessible route complying with section 15.3 (Protruding Objects) and section 15.4 (Handrails on Ramps and Stairs) to portions of the facility that are constructed for children? Commenters should consider Questions 5 (protruding objects), 22 (accessible route width), 23 (ramp slope), and 24 (ramp length) when responding.

15.2 Reach Ranges

This section specifies reach ranges for the mounting heights of elements to be accessible to and usable by children. Such elements include controls, dispensers, receptacles and other operable equipment subject to ADAAG 4.27 (Controls and Operating Mechanisms) and storage elements covered by ADAAG 4.25 (Storage) where they are provided for use by children. ADAAG currently requires that such elements be provided within adult reach ranges specified in ADAAG 4.2 (Space Allowance and Reach Range). The reach ranges proposed in section 15.2 are intended to apply only to those controls and operating mechanisms and storage elements that are constructed according to children's dimensions and anthropometrics such as student lockers or controls of displays in children's

sections of museums. Elements provided for use by adults rather than primarily by children are not covered by this section.

Section 15.2.1 modifies the reach range requirements of ADAAG 4.2. Section 15.2 includes a table that lists three design options: A, B, and C. These options specify reach ranges according to three age groups: 2 through 4, 5 through 8, and 9 through 12. Section 15.2.2 requires the application of either A, B, or C. Further, this section states that selection of A, B, or C should correspond to the age range of the primary user group served. The term ''should'' is used in this section to permit discretion where accessible elements may serve more than one age group of children or where the age range of children does not correspond to the specific age groups listed in the table. According to ADAAG 3.4 (General Terminology), the term ''should'' denotes an advisory specification or recommendation.

The table in section 15.2.2 specifies high and low reach ranges for children according to age: 36 inches (high) and 20 inches (low) for ages 2 through 4, 40 inches (high) and 18 inches (low) for ages 5 through 8, and 44 inches (high) and 16 inches (low) for ages 9 through 12. Consistent with the CAH recommendations, the reach ranges proposed in this section are the same for both forward and side reach. The reach ranges specified in the table to section 15.2.2 are to be applied instead of the 15 to 48 inch reach range required by ADAAG 4.2.5 (Forward Reach), and the 9 to 54 inch reach range specified by ADAAG 4.2.6 (Side Reach). It should be noted that designing according to the specifications in A would also satisfy the requirements in B and C. For example, locating certain accessible storage between 20 inches and 36 inches above the finish floor would be appropriate for A (ages 2 through 4), B (ages 5 through 8), and C (ages 9 through 12), thus making the storage readily accessible to a broad age range of children. An accessible element mounted at 44 inches above the finish floor however, may only be accessible to children age 9 and older.

The CAH study recommended a forward and side reach of 20 inches minimum and 36 inches maximum for all children. However, since the ergonomic data evaluated by CAH did not conclusively justify limiting the reach range of children older than 4 years of age to a 20 inch minimum and 36 inch maximum, the proposed reach ranges in section 15.2 may be more reflective of the sizes and anthropometrics of the age range of children considered by this rule. Responses to Question 3 below will aid the Access Board in determining whether to retain the table as proposed, amend the table, or to specify the reach ranges recommended in the CAH study for all children, in the final rule.

Question 3: Do the specifications in A, B, and C of the table in section 15.2 accurately reflect the reach ranges of children (ages 2 through 12) with disabilities? If not, what specifications are appropriate for children using facilities covered by section 15? Where possible, responses should include anthropometric data or related information.

Appropriate reach ranges over obstructions are critical to ensure the usability of controls and operating mechanisms mounted above or on counters, lavatories and other fixed elements. Current ADAAG specifications for forward and side reaches over obstructions are based on adult dimensions and anthropometrics. ADAAG 4.2.5 (Fig. 5(b)) provides that the maximum forward reach shall be 25 inches deep over an obstruction. Since the height of reach is reduced as the depth of an obstruction increases, ADAAG lowers the maximum forward reach from 48 to 44 inches for reaches over an obstruction greater than 20 inches deep. ADAAG 4.2.6 (Fig. 6(c)) specifies a maximum side reach of 24 inches over an obstruction no higher than 34 inches. Similarly, when an obstruction is greater than 10 inches in depth, the maximum side reach is reduced from 54 to 46 inches. CAH evaluated ergonomic data on the depth of reach of children with disabilities but did not provide recommendations based on this data. The CAH study did provide a recommendation for the placement of lavatory faucets, which is discussed further in the analysis of section 15.8.

Question 4: The Access Board and the Department of Justice request information or recommendations on each of the following:

(a) the maximum horizontal forward reach over an obstruction for children ages 2 through 4, 5 through 8, and 9 through 12;

(b) the maximum height of elements mounted over an obstruction (forward reach) for children ages 2 through 4, 5 through 8, and 9 through 12;

(c) the maximum horizontal side reach over an obstruction for children ages 2 through 4, 5 through 8, and 9 through 12; and

(d) the maximum height of elements mounted over an obstruction (side reach) for children ages 2 through 4, 5 through 8, and 9 through 12.

Where possible, commenters should provide anthropometric data or related information to support their recommendations and, if known, identify impacts on the design or placement of lavatory faucets, lockers, and other elements subject to reach requirements. Based on comments received, the Access Board may specify maximum forward and side reach ranges over an obstruction in the final rule.

Figures 1 and 2 which are set forth below illustrate the information sought in (a) through (d) in Question 4.

BILLING CODE 4410–01–P and 8150–01–P

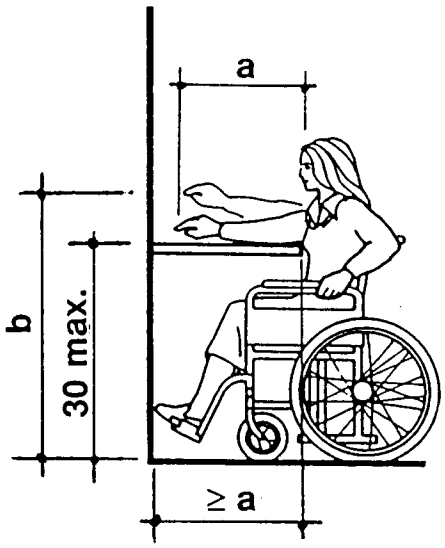

FIG. 1 FORWARD REACH

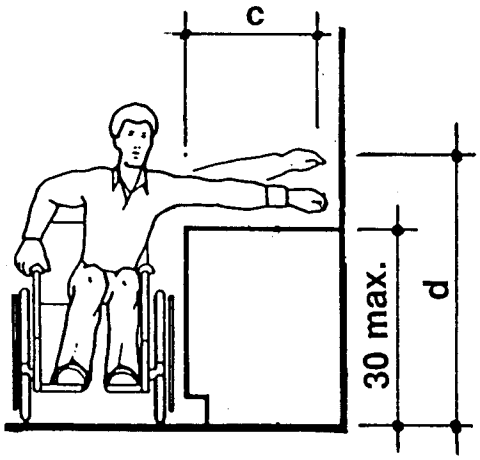

FIG. 2 SIDE REACH

BILLING CODE 4410–01–C and 8150–01–C

15.3 Protruding Objects

This section modifies the current technical requirements in ADAAG 4.4 (Protruding Objects). ADAAG 4.4.1 currently specifies that elements mounted on walls, such as phones and light fixtures, shall not project more than 4 inches from the wall surface if the leading edge is above 27 inches from the finish floor. ADAAG 4.4.1 also specifies that free-standing objects on posts or pylons may overhang 12 inches maximum if the leading edge is above 27 inches from the finish floor. The cane sweep of an adult with a vision impairment generally encounters objects at or below 27 inches. However, a child's stride is shorter, and his or her cane sweep is typically narrower and lower. Therefore, a child's cane will not contact such objects at a point that provides effective warning. According to the CAH recommendations, children using canes can detect protruding objects up to 12 inches from the ground or floor surface. This section reduces the 27 inch height specified by ADAAG 4.4.1 to 12 inches.

Under current ADAAG, elements projecting more than 4 inches such as drinking fountains and telephones may be mounted at heights or with side partitions so that the leading edge is at or below 27 inches. Section 15.3 would require that these elements be mounted or have side partitions so that the leading edge is no more than 12 inches from the floor. In order to meet this

requirement, drinking fountains and other elements which require knee clearance may have to be located in alcoves or be protected by walls, partitions, or other features.

Question 5: What are the new construction costs associated with providing walls, partitions, or alcoves for drinking fountains and other elements that require knee clearance yet must also be within the 12 inch height for effective detection by cane sweep?

15.4 Handrails at Ramps and Stairs

This section addresses handrails on ramps and stairs on the accessible route serving children's areas covered by section 15. Unlike most of the provisions proposed in this rule, this section both modifies current ADAAG specifications and requires an additional accessible feature. Under section 15.4.1, ramps subject to ADAAG 4.8 (Ramps) and stairs subject to ADAAG 4.9 (Stairs) that serve elements and spaces constructed according to children's dimensions and anthropometrics are required to provide a second set of handrails at a lower height and with a smaller diameter for children. These handrails are to be provided in addition to the higher handrail required by current ADAAG. The lower handrails for children are subject to current specifications for ramp handrails (ADAAG 4.8.5) or stair handrails (ADAAG 4.9.4), including requirements for a continuous gripping surface, 12 inch extensions beyond the top and bottom of ramps or stairs, clear space between handrails and walls of 1½ inches, rounded or returned ends, and the level of structural strength specified in ADAAG 4.26.3.

The second set of handrails required by this section is subject to mounting height and diameter requirements that are different from those currently in ADAAG. Section 15.4.2 requires the gripping surface of this handrail to be mounted between 20 to 28 inches above the ramp surface or stair nosing. Under current ADAAG, a handrail mounted at 34 to 38 inches must also be provided. Section 15.4.3 specifies that the gripping surface of the lower handrail shall have a diameter of 1 to 1¼ inches or provide an equivalent gripping surface. Current ADAAG (4.26.2) requires a diameter of 1¼ to 1½ inches. The handrail requirements for section 15 are based on the CAH recommendations and are similar to requirements or recommendations in California, Illinois, Michigan, Texas, and Florida.

Consistent with ADAAG, the lower handrail is required to have a continuous gripping surface. Where handrails at the adult height are mounted on top of vertical posts, lower handrails required for children may have to be mounted aside or off-set from such posts so that the gripping surface of the lower handrail is not interrupted. Handrails, including lower handrails off-set from vertical supports, may not reduce the minimum 36 inch clear width required for ramps.

Question 6: The clear space between the upper handrail required by current ADAAG and the lower handrail proposed in section 15.3 may range from 16¾ to 4½ inches. Does this range of vertical distance between handrails pose any hazard of entrapment? If so, what vertical distance is narrow enough or is wide enough to prevent entrapment?

Question 7: Is the clear space between the upper and lower handrails of 4½ inches sufficient for children to grasp the lower handrail? If not, what should be the minimum vertical distance between the upper and lower handrails when one is mounted directly above the other?

Question 8: Section 15.4.3 specifies a handrail diameter of 1 to 1¼ inches instead of the 1¼ to 1½ inches required by current ADAAG. Steel pipe is often used for handrails on ramps and stairs. In the building industry, pipe size typically refers to the inside diameter so that a 1½ inch pipe handrail may have an outside diameter close to 2 inches. Under this industry practice, certain handrails specified at 1¼ inches may have an outside diameters up to 1⅝ inches or greater depending on the specifications of the pipe provided. Is a handrail diameter greater than 1⅝ inches usable by children with disabilities? Should the guidelines specify a maximum outside diameter of handrails used by children?

15.5 Drinking Fountains and Water Coolers

This section modifies technical requirements for accessible drinking fountains and water coolers in ADAAG 4.15 (Drinking Fountains and Water Coolers). Section 15.5 does not increase the number of accessible drinking fountains or water coolers currently required by ADAAG. Section 15.5.1 requires that drinking fountains and water coolers comply with ADAAG 4.15 except for the requirements for spout height (4.15.2) and clearances (4.15.5), which are modified by this section.

Section 15.5.2 specifies a maximum spout height of 30 inches measured from the floor to the spout outlet instead of the 36 inch maximum specified by current ADAAG. Since children are smaller and wheelchairs manufactured for children may have seat heights that are approximately 1 to 2 inches lower than seat heights on adult wheelchairs, spout heights must be lower than 36 inches above the floor. The 30 inch spout outlet height is based on the CAH recommendations.

Section 15.5.3 requires that clear knee space be at least 24 inches high measured from the floor to the underside of the drinking fountain and at least 8 inches deep measured from the leading edge of the drinking fountain. The 24 inch height is based in part on the lower height typical of children's wheelchairs and is consistent with the CAH recommendations. A toe clearance at least 12 inches high, measured from the floor, is also required. According to the CAH study, this higher toe clearance is necessary for children since their legs are shorter, resulting in wheelchair footrests that are typically mounted higher than on adult wheelchairs. The drinking fountain may overlap the clear floor space no more than 14 inches. This modifies ADAAG 4.15.5, which requires a 27 inch high minimum knee space, a 9 inch high minimum toe space, and permits the fountain to overlap the clear floor space 17 to 19 inches.

Question 9: Are drinking fountains currently available that meet the proposed requirements for a maximum 30 inch spout height, a minimum 24 inch knee clearance, and a minimum 12 inch toe space height when properly mounted? If not, what are the design or product specifications that conflict with these proposed requirements, and are there design solutions which would provide the necessary knee space and spout outlet height for children? What are the costs of such recommended solutions?

15.6* Water Closets, Toilet Seats, Grab Bars, and Toilet Paper Dispensers

This section proposes technical specifications for water closets for children. It does not increase the number of water closets required to be accessible within toilet rooms and does not modify the requirement in ADAAG 4.22.4 that accessible toilet rooms have at least one accessible water closet. This section provides technical requirements based on children's dimensions to be used instead of the current provisions in ADAAG 4.16 (Water Closets), which are based on adult dimensions. Under section 15.1, toilet rooms required to be accessible by current ADAAG 4.1.3, which are constructed according to children's dimensions and anthropometrics, would be required to have at least one water closet complying

with ADAAG 4.16 as modified by this section.

The specifications proposed in section 15.6 modify ADAAG 4.16 provisions covering water closet centerline (4.16.2), toilet seat height (4.16.3), grab bars (4.16.4), toilet paper dispensers (4.16.6), and flush controls (4.16.5). The CAH recommendations, upon which these proposed specifications are based, note that the requirements appropriate for water closets vary according to grade or age. Section 15.6 includes a table that lists three options, A, B, and C, which provide specifications for mounting locations of water closets, toilet seats, grab bars, and toilet paper dispensers. A, B, and C correspond to three age groups of children: 2 through 4, 5 through 8, and 9 through 12, respectively. Section 15.6.2 requires the application of either A, B, or C. Further, this section states that selection of A, B, or C should correspond to the age range of the primary user group served by the toilet room. The term ''should'' is used in this section to permit discretion where toilet rooms may serve more than one age group of children, or where the age range of children does not correspond to the specific age groups listed in the table. ADAAG 3.4 (General Terminology) states that the term ''shall'' denotes a mandatory specification or requirement. The term ''should'' denotes an advisory specification or recommendation. The application of A, B, or C is further discussed in an appendix note.

Some of the technical specifications in A, B, and C of the table overlap. Thus, the application of specifications similar to both A and B, or B and C, may facilitate access for more than one age group. For example, a water closet with a centerline at 12 inches, a toilet seat at 12 inches, grab bars at 20 inches, and a toilet paper dispenser at 14 inches above the finish floor may be appropriate for A (ages 2 through 4) and B (ages 5 through 8). Similarly, a water closet with a centerline at 15 inches, a toilet seat at 15 inches, grab bars at 25 inches, and a toilet paper dispenser at 17 inches above the finish floor may be appropriate for B (ages 5 through 8) and C (ages 9 through 12). This section does not require the provision of multiple accessible fixtures in toilet rooms serving more than one age group. An appendix note to this section illustrates these examples.

Question 10: Some of the specifications in the table in 15.6.2 allow for overlap in two of the age groups, but do not provide measurements that would meet the needs of all three age groups. Are there alternative specifications available which would provide measurements that would be appropriate for all three age groups? Where possible, comments should provide a rationale with supporting data.

The table in section 15.6.2 specifies the centerline of water closets from one side wall or stall partition according to the age group the water closet is intended to serve: 12 inches for ages 2 through 4, 12 to 15 inches for ages 5 through 8, and 15 to 18 inches for ages 9 through 12. The proximity of water closets to grab bars mounted on walls or partitions is critical for safe transfer to and from mobility aids. These specifications are generally consistent with the CAH recommendations and recognize that children's reach ranges are generally shorter than those of adults. Section 15.6.2 modifies ADAAG 4.16.2, which specifies a centerline measurement of 18 inches absolute.

Section 15.6.2 also notes that the centerline requirements in this section do not apply to water closets in the 36 inch wide alternate stall permitted in alterations by ADAAG 4.1.6(3)(e)(ii). The 48 inch wide alternate stall is subject to the centerline locations in 15.6.2 because such stalls do permit side transfer. The use of alternate stalls is permitted in alterations only where it is technically infeasible to provide a standard stall or where codes prohibit the reduction of the number of water closets.

The table in section 15.6.2 provides toilet seat heights according to the age group the water closet is intended to serve: 11 to 12 inches for ages 2 through 4, 12 to 15 inches for ages 5 through 8, and 15 to 17 inches for ages 9 through 12. According to the CAH study, toilet seats should be lower for younger children, including those with disabilities, so that their feet reach the floor in order to provide stability and greater usability. The CAH study further indicates that young children with mobility impairments are typically assisted in toileting. Therefore, for young children, maintaining a toilet seat height that is closer to the seat height of mobility aids is less critical. For older age groups the toilet seat height is increased to be in closer proximity to the seat height of wheelchairs and other mobility aids in order to facilitate independent transfers. The specifications for toilet seat height in section 15.6.2 are to be used instead of the 17 to 19 inches required by ADAAG 4.16.3.

Section 15.6.2 requires grab bars serving water closets to be mounted accordingly for the following age groups: 18 to 20 inches for ages 2 through 4, 20 to 25 inches for ages 5 through 8, and 25 to 27 inches for ages 9 through 12. These grab bar heights are based on the CAH recommendations and are to be applied instead of the 33 to 36 inch height required by ADAAG 4.16.4 and Fig. 29.

Rear grab bars mounted 18 to 27 inches above the floor cannot be provided where tank-type water closets are used because the top of the tank is usually above the grab bar mounting location. This is generally not a problem in adult facilities where grab bars are mounted above conventional tanks.

Question 11: Are tank-type water closets commonly provided in children's facilities? If so, what is the difference in cost between water closets with tanks and those without tanks? Where possible, responses should include per unit cost and installation costs of the two types of water closets.

Question 12: Do the grab bar heights specified in the table in section 15.6.2 conflict with building or plumbing code requirements for flush control location, size, and height? If so, what accessible design alternatives could avoid such conflicts and what are the costs associated with such alternatives?

Section 15.6.3 specifies that the grab bar gripping surface have a diameter of 1 to 1¼ inches or provide an equivalent gripping surface, consistent with the CAH recommendations. Current ADAAG requires a diameter of 1¼ to 1½ inches. Grab bars covered by this section, which are also subject to requirements of ADAAG 4.16, must meet the requirements of ADAAG 4.26 (Handrails, Grab Bars, and Tub and Shower Seats), including requirements for spacing from the wall of 1½ inches (4.26.2), structural strength (4.26.3), and surface (4.26.4). ADAAG 4.26.4 requires grab bars to be free of any sharp or abrasive surfaces. Some building codes require grab bars to have textured surfaces (knurled, peened or anti-slip) to prevent hands from slipping during use.

Question 13: Should a requirement be included for textured grab bars serving children? What types of texturing are most effective in preventing slippage and improving grip that are not sharp or abrasive? The Access Board may consider including such a requirement in the final rule.

The table in section 15.6.2 provides mounting heights for toilet paper dispensers according to the following age groups: 14 inches for ages 2 through 4, 14 to 17 inches for ages 5 through 8, and 17 to 19 inches for ages 9 through 12. This modifies ADAAG 4.16.6 and Fig. 29(b), which specifies a height of 19 inches.

Section 15.6.4 requires that flush controls be mounted within the reach ranges for children specified in section 15.2 (20 to 36 inches for ages 2 through 4, 18 to 40 inches for ages 5 through 8, and 16 to 44 inches for ages 9 through 12) instead of at 44 inches or below as required by ADAAG 4.16.5.

Question 14: Do the proposed heights for flush controls conflict with any plumbing codes, industry practices, or design practices? If so, responses should identify and describe the specific code or practice conflict.

15.7 Toilet Stalls

This section contains specifications for toilet stalls provided in toilet rooms constructed according to children's dimensions and anthropometrics. This section does not increase the minimum number of accessible toilet stalls required by ADAAG 4.22.4. Section 15.7 modifies requirements in ADAAG 4.17 (Toilet Stalls) for water closets (4.17.2), stall size (4.17.3), toe clearance (4.17.4), and grab bars (4.17.6). Under section 15.7.1, toilet stalls required to be accessible by ADAAG 4.22.4 shall comply with ADAAG 4.17, except as modified by section 15.7.

Section 15.7.2 requires water closets in accessible stalls to comply with section 15.6. The water closet centerline specifications in section 15.6.2 are appropriate only for stalls wide enough to allow side transfers. *See* section 15.6.2.

Section 15.7.3 requires standard stalls to have a minimum stall depth of 59 inches where toilets are wall- or floor-mounted. This modifies ADAAG 4.17.3 (Fig. 30(a)), which also requires a minimum depth of 59 inches for stalls with floor-mounted water closets but specifies a minimum depth of 56 inches for stalls with wall-mounted water closets. Section 15.7.3 increases the minimum depth because wall-mounted water closets serving children may not provide adequate toe clearance. Wall-mounted water closets with adult seat heights of 17 to 19 inches typically provide toe clearance beneath the water closet for adults. As water closets designed to serve young children are lower than adult water closets and as children's footrests are generally higher than adults, toe clearance is not available beneath wall-mounted water closets serving children.

Similarly, in the case of standard stalls located at the end of the row, section 15.7.3 specifies a depth of 59 inches in addition to the minimum 36 inches required for the stall door and for the 90 degree turn. This modifies ADAAG 4.17.3 (Fig. 30(a-1)), which requires the same minimum depth for stalls with floor-mounted water closets but specifies a minimum depth of 56 inches for stalls with wall-mounted water closets.

Section 15.7.3 also specifies that when alterations are made, alternate stalls with wall- or floor-mounted water closets have a minimum depth of 69 inches. This modifies ADAAG 4.17.3 (Fig. 30(b)), which requires the same depth for stalls with floor-mounted water closets but specifies a minimum depth of 66 inches for alternate stalls with wall-mounted water closets. ADAAG 4.17.3 includes an exception permitting use of alternate stalls in lieu of the standard 60 inch wide stall in alterations where it is technically infeasible to provide a standard stall.

Question 15: What is the cost impact of requiring stalls with wall-mounted water closets to be at least 59 inches deep?

Section 15.7.4 specifies that the front partition and one side partition of standard stalls of minimum dimension provide a toe clearance of 12 inches minimum. This modifies ADAAG 4.17.4, which requires a toe clearance of 9 inches minimum. According to the CAH study, this higher toe clearance is necessary for children since their legs are shorter, resulting in footrests that are typically mounted higher than on adult wheelchairs.

Question 16: Section 15.7.4, consistent with current ADAAG, requires toe clearance beneath partitions only where the stall depth is 60 inches or less. The CAH study did not consider whether toe clearance is necessary in stalls more than 60 inches deep, including end- of-row standard stalls and alternate stalls. Is a 12 inch toe clearance beneath partitions needed for children's maneuvering in stalls more than 60 inches deep? The Access Board may include such a requirement in the final rule.

Question 17: While the CAH study recommended that toe clearance beneath partitions be at least 12 inches high, it also recommended, as proposed in section 15.6.2, that toilets serving young children (i.e., ages 2 through 4) have a seat height of 11 to 12 inches. The CAH recommendations do not address privacy considerations concerning clearances beneath partitions that are as high or higher than the toilet seat height. Does this toe clearance requirement and toilet seat height compromise privacy? What design solutions are available that provide the 12 inch toe clearance while maintaining the privacy of stall users? Should a wider width of stalls be specified in the final rule as an alternative to the provision of toe clearance beneath partitions? If so, what should this wider stall width be? Where possible, commenters should include any information on the cost impact of their recommendation.

Section 15.7.5 requires that grab bars be mounted as specified in section 15.6.2. This modifies the height requirements in ADAAG 4.17.6, but does not change the length and configuration requirements shown in Fig. 30. Section 15.7.5 also specifies that the gripping surface have a diameter of 1 to 1¼ inches or provide an equivalent gripping surface, consistent with CAH recommendations. Current ADAAG (4.26.2) requires grab bars to have a diameter of 1¼ to 1½ inches. Grab bars subject to ADAAG 4.17 must meet ADAAG 4.26 (Handrails, Grab Bars, and Tub and Shower Seats), including requirements for spacing from the wall of 1-½ inches (4.26.2), structural strength (4.26.3), and surface (4.26.4). *See* section 15.6.2 for discussion and questions on grab bars at water closets.

15.8 Lavatories and Mirrors

This section provides specifications for accessible lavatories and mirrors and modifies requirements in ADAAG 4.19 (Lavatories and Mirrors) for lavatory height and clearances (4.19.2), clear floor space (4.19.3), and mirror height (4.19.6). In toilet rooms, bathrooms, bathing facilities, and shower rooms constructed according to children's dimensions and anthropometrics, section 15.8.1 provides that at least one lavatory and mirror be accessible to children with disabilities. This does not increase the number of lavatories or mirrors required to be accessible by current ADAAG 4.22 (Toilet Rooms) or ADAAG 4.23 (Bathrooms, Bathing Facilities, and Shower Rooms).

Section 15.8.2 specifies a lavatory rim no higher than 30 inches above the floor and a minimum clearance 27 inches high from the floor to the underside of the apron. These specifications, like those for drinking fountains, are based on children's dimensions and CAH recommendations. This section modifies ADAAG 4.19.2, which requires a maximum rim height of 34 inches and a minimum clearance of 29 inches. One comment to the ANPRM from a local school system stated that lavatories for children without disabilities ages 2 through 5 are mounted no higher than 24 inches. Some state requirements for educational or child care facilities specify standard mounting heights of 24 to 26 inches for lavatories serving young children. Thus, a 30 inch maximum height may conflict with such requirements and may be too high to be usable by children using crutches and

by children without disabilities. In contrast, an accessible lavatory mounted at adult height (e.g., 34 inches maximum) is generally usable by all adults, including those with disabilities. Where a children's toilet room has only one lavatory constructed according to children's dimensions and anthropometrics, this rule specifies the lavatory to be accessible to children with disabilities.

Section 15.8.2 also requires that the clear knee space beyond the leading edge of the apron be at least 24 inches high measured from the floor and at least 8 inches deep measured from the leading edge. Toe clearance at least 12 inches high measured from the floor is also required. According to the CAH study, this higher toe clearance is necessary for children since their legs are shorter, resulting in wheelchair footrests that are typically mounted higher than on adult wheelchairs. The CAH study recommended these clearances to enable children using wheelchairs to approach lavatories and reach the bowl and faucets. This section modifies ADAAG 4.19.2 and Fig. 31, which specify knee clearance at least 27 inches high and toe clearance at least 9 inches high.

Question 18: Are lavatories currently available that meet the proposed requirements for rim height and knee and toe clearances when properly mounted? If not, what are the design or product specifications that conflict with these proposed requirements? What products or design solutions are available for providing lavatories with 24 inch knee clearance and a 30 inch rim height that are also usable by all children, including those with disabilities? Where possible, responses should include cost estimates for these products or design solutions.

Section 15.8.3 specifies that the required clear floor space may extend no more than 14 inches beneath the lavatory. The CAH recommendations, consistent with Florida's recommended ''Building Standards for Educational Facilities for Handicapped Children'' (Florida Department of Education, 1988) (the ''Florida recommended standards''), (section 8.5.2.3 (Fig. 8.9)), specify a maximum overlap of 12 inches. The 14 inch maximum proposed in this provision, however, is consistent with current ADAAG requirements for knee clearance at least 8 inches deep and toe clearance no more than 6 inches deep. This modifies ADAAG 4.19.3, which allows a maximum overlap of 19 inches.

In its evaluation of children's facilities, CAH observed that many children using wheelchairs positioned themselves aside, and sometimes between, lavatories in order to reach faucet controls. This was observed at lavatories of various heights where controls were mounted at the back of the bowl. The CAH study recommended that faucets be located within 14 inches of the front edge of the lavatory. The Florida recommended standards (section 8.5.4 (Fig. 8.10)) permit location of controls at the front of the lavatory or aside the bowl. The Texas State Building Code (section 2.1.1, Texas Accessibility Standards, April 1, 1994) requires that faucets be located no more than 18 inches from the front edge of lavatories serving children ages 4 through 10 or 11.

Question 19: The final rule may specify that faucets be located no more than 14 inches from the front edge of lavatories. Is this distance appropriate or should an alternative distance or location (i.e., aside or in front of bowls) be specified? Where possible, recommendations for alternative distances or locations should include rationale and other supporting data, as well as identification of any potential conflicts with plumbing codes. Commenters should consider Question 4 (reach over obstruction) when responding. Information is sought on design alternatives and new technologies, such as automatic sensors, that facilitate use of faucets by children.

Section 15.8.4 provides that the bottom edge of mirrors at accessible lavatories be mounted no higher than 34 inches above the floor. ADAAG 4.19.6 currently provides that mirrors at lavatories accessible to adults have their bottom edge no higher than 40 inches. The CAH study noted that mirrors mounted above lavatories are too high for many children to use and recommended providing a full-length mirror in children's toilet rooms, which are commonly provided in elementary school toilet rooms. The current appendix to ADAAG 4.19.6 notes that full-length mirrors provide more convenient access than mirrors mounted above lavatories. A 30 by 48 inch clear floor space should be provided in front of these mirrors outside the door swing.

Question 20: Should full-length mirrors and clear floor space be required in children's toilet rooms? Where possible, responses should include information on the cost and space impact. The final rule may include such a requirement.

15.9 Storage

This section covers fixed and built-in storage facilities constructed according to children's dimensions and anthropometrics. ADAAG 4.1.3(12) requires at least one of each type of storage space or element to be accessible. Section 15.9.1 requires that these spaces and elements comply with ADAAG 4.25 (Storage), as modified by section 15.9.2.

Section 15.9.2 requires that storage facilities be within the reach range specified in section 15.2 for front or side reaches. This applies to such storage spaces as lockers, cabinets, shelves, closets, and drawers, and to such storage elements, as clothes rods, shelving, and hooks. This modifies ADAAG 4.25.3, which specifies a range of 15 to 48 inches for front reach and 9 to 54 inches for side reach.

15.10 Fixed or Built-in Seating and Tables

This section addresses fixed and built-in seating and tables constructed according to children's dimensions and anthropometrics. ADAAG 4.1.3(18) requires five percent of built-in seating or tables to be accessible. Section 15.10.1 requires compliance with ADAAG 4.32 (Fixed and Built-in Seating and Tables), as modified by this section.

Section 15.10.2 specifies that fixed tables shall not overlap the required 30 by 48 inch clear floor space by more than 14 inches. This is consistent with requirements for clear floor space at lavatories in section 15.8. ADAAG 4.32.2 currently allows an overlap of 19 inches.

Section 15.10.3 requires knee clearance at least 24 inches high, 30 inches wide, and 14 inches deep. This modifies ADAAG 4.32.3, which requires knee clearance at least 27 inches high, 30 inches wide, and 19 inches deep. Section 15.10.4 requires the tops of accessible tables and counters to be 26 to 30 inches high, measured from the floor. This differs from ADAAG 4.32.4, which specifies a range of 28 to 34 inches for this height. The specifications proposed in section 15.10 are based on the CAH recommendations.

Other Issues

In the course of the development of this proposed rule, questions have been raised about the effect of other current ADAAG requirements on accessibility for children with disabilities. These issues are discussed below.

There is no known data available to enable the Access Board and the Department of Justice to determine whether additional regulations in this area are necessary or appropriate. Therefore, the agencies have not included specific regulatory requirements on these issues in this proposed rule. The Access Board and the Department of Justice raise these

questions now in an effort to determine if there is sufficient data available to support future regulatory requirements.

Clear Floor and Knee Clearance: Width

ADAAG 4.2 (Space Allowance and Reach Ranges) specifies that clear floor or ground space 30 inches wide and 48 inches long is the minimum necessary to accommodate a single, stationary wheelchair occupied by an adult. This clear floor space is required at drinking fountains, lavatories, sinks, built-in tables, and telephones. Consistent with this requirement, ADAAG also requires knee space at least 30 inches wide beneath such elements. The CAH recommendations, as well as the Florida recommended standards (section 9.2.2 (Fig. 9.5)), specify that the clear floor space and knee clearance be at least 36 inches wide in children's facilities. According to the CAH recommendations, the upper body strength and maneuvering skills of children are not as developed as those of adults, therefore children require more space to approach and position themselves at elements. Increasing the width of the clear floor space may require additional space between adjacent elements such as drinking fountains, telephones, and lavatories, or wider alcoves in which such elements are mounted.

Question 21: Should the minimum width of clear floor space and knee clearance be increased to 36 inches, or some other recommended alternative, in facilities constructed according to children's dimensions and anthropometrics? Where possible, responses should include information on the cost impact in new construction of increasing this width to 36 inches or recommended alternatives.

Accessible Route: Minimum Width

ADAAG 4.3 (Accessible Route) requires that the width of accessible routes shall be 36 inches minimum. The CAH study recommended that accessible routes in children's facilities be at least 44 inches wide. In its evaluation of children's facilities, CAH observed children straying or diverging from a direct line of travel in traversing halls and corridors and approaching elements and fixtures. The CAH study attributed this to children's level of strength, stamina, and dexterity in the use of mobility aids. Most state building codes do not contain requirements that specifically address accessible routes for children. However, the Florida recommended standards (section 3.3.3) specify a minimum width of 44 inches for interior accessible routes. The Access Board is considering a similar requirement. State building and life safety codes typically require hallways or corridors to be wider than 44 inches for purposes of egress. Therefore, a requirement for a 44 inch wide route may have little cost and space impact in hallways or corridors. Routes off hallways or corridors in classrooms, libraries, toilet rooms, and other spaces would be affected by such a requirement. This includes routes to accessible study carrels and between library stacks. Increasing the minimum accessible route width would impact current ADAAG requirements for widths at turns around obstructions (4.3.3, Fig. 7(a)), passing space (4.3.4), curb ramps (4.7.3), and ramps (4.8.3).

Question 22: Should the minimum width of an accessible route be increased from 36 inches to 44 inches? Where possible, responses should provide a rationale with any supporting data, and information on the cost impact of an accessible route wider than 36 inches in new construction. *See* Question 2 (accessible route).

Ramps: Slope and Rise

ADAAG 4.8 (Ramps) requires that the least possible slope be used on any ramp, and that the maximum slope not exceed 1:12 in new construction. The CAH recommendations and commenters to the ANPRM considered the 1:12 slope too steep for children and recommended maximum slopes of 1:16 or 1:20 to take into account the differences in strength and stamina between children and adults. The Access Board is currently conducting a research project on ramp slope. Children will be included in the test sample. The Access Board anticipates that this research will be completed prior to the issuance of a final rule on children's facilities and that the results may be incorporated in this section.

Question 23: What should the maximum slope be for ramps used by children? Where possible, commenters should provide data to support their recommendations and information on the cost impact of their recommendations in new construction. *See* Question 2 (accessible route).

The usability of a ramp generally depends both on its slope and length of run. ADAAG 4.8.2 specifies a maximum length of run of 30 feet for ramps steeper than 1:16 and a maximum length of run of 40 feet for ramps with slopes 1:16 to 1:20. The CAH study recommended a maximum length of run of 20 feet for ramps in children's facilities since children generally do not have the strength to negotiate longer ramps. A 20 foot maximum length of run for ramps with slopes of either 1:16 or 1:20, as recommended by the CAH study, will limit the rise to approximately 9⅝ and 12 inches, respectively. The ramp research which the Access Board is conducting will study and make recommendations on ramp length.

Question 24: Should the maximum length of run for ramps in facilities constructed according to children's dimensions and anthropometrics be reduced to 20 feet? Where possible, responses should include rationale with supporting data and information on the cost impact in new construction. *See* Question 2 (accessible route).

Door Hardware

The CAH study recommended that door hardware be mounted 30 to 34 inches from the floor. ADAAG 4.13 (Doors) specifies that door hardware be mounted no higher than 48 inches, which is generally consistent with most building codes. According to conventional design practice, door hardware is typically mounted at 36 inches above the floor.

Question 25: Doors in facilities constructed according to children's dimensions and anthropometrics are also used by adults. Is door hardware mounted between 30 to 34 inches above the floor usable by adults?

Urinals

The CAH study recommended that urinal rims be 14 inches high maximum and that flush controls be 30 inches high maximum above the floor, instead of the 17 inch rim height and the 44 inch flush control height required by ADAAG 4.18 (Urinals). In response to the ANPRM, a national manufacturer of plumbing fixtures commented that the 30 inch height for flush controls is not feasible since the average urinal is 27 inches high, and further commented that national plumbing codes require the flush valve handle to be at least 8½ inches above the urinal, resulting in a flush control height of at least 38 to 40 inches.

Question 26: Are there products or design solutions currently available that meet both applicable codes and the CAH recommended specifications, including the 30 inch maximum height for flush controls? Where possible, responses should identify any cost increases associated with designing or installing urinals to meet the CAH recommendations and applicable plumbing codes.

Sinks

Sinks provided in spaces for children may serve different purposes and users. In schools for example, some sinks may serve as a wash station for children,

while others may serve as part of a work station for instructors. Often, one sink is provided for both purposes. The CAH recommendations included requirements for sinks accessible to children. Similar to the provisions for lavatories, the CAH study recommended that sinks have a rim no higher than 30 inches above the floor, knee clearance at least 24 inches high, and that the faucet and faucet controls be located within 14 inches of the front edge of the sink. Under these recommendations, sink bowls could be no more than 5½ inches deep. These recommendations modify ADAAG 4.24 (Sinks), which specifies a 34 inch maximum sink height and 27 inch minimum knee clearance. Standard mounting heights for sinks serving young children may be 24 to 26 inches, according to some state requirements for educational facilities. Thus, a 30 inch maximum height may conflict with such requirements and be too high for young children.

Question 27: What product or design solutions are available for providing sinks with 24 inch knee clearance and a 30 inch rim height that are also usable by young children who are ambulatory? Where possible, responses should include cost estimates for these products or design solutions.

Signage

The CAH study recommended that tactile signage be mounted at a height of 48 inches, while the Florida recommended standards (section 3.20.5 (Fig. 3.31)) specify a maximum height of 42 inches. ADAAG 4.30 (Signage) requires raised and Brailled signage to be mounted 60 inches above the finish floor.

Question 28: Are signs primarily used by children in children's facilities? If so, how should the guidelines accommodate adults? Is a specific height of either 48 inches or 42 inches appropriate for signage provided for children? Are there other heights which would be more appropriate?

Wheelchair Seat Heights

The type, size, and specifications of wheelchairs vary widely and, as with any consumer product, individuals may have a number of reasons for using one type or model rather than another. The CAH recommendations, as well as available product information on wheelchairs, suggest that the average seat height on child-sized wheelchairs may range from 1 to 2 inches lower than the average seat height on adult-sized wheelchairs. The proposed requirements in this rule for the minimum knee clearance height and maximum height of such accessible elements as drinking fountain spout outlets, fixed tables, and lavatories are based on the size and stature of children, as well as the average seat height of child-sized wheelchairs.

Question 29: What is the average age where children begin to use adult-sized wheelchairs?

Regulatory Process Matters

Executive Order 12866

The Office of Management and Budget has reviewed this proposed rule as a ''significant regulatory action'' under Executive Order 12866, section 3(f)(4). Facilities covered by this rule are already subject to the scoping and technical provisions in current ADAAG. Therefore, with the exception of additional handrails required on covered ramps or stairs, this rule does not add new requirements. Rather, it generally proposes to modify, or questions whether to modify, current ADAAG provisions when constructing facilities according to children's dimensions and anthropometrics. The Access Board and the Department of Justice have determined that the costs associated with the application of the proposed requirements will have a minimal cost impact on new or altered facilities constructed according to children's dimensions and anthropometrics; and therefore a cost-benefit analysis is not required under Executive Order 12866, section 6(a)(3)(C). However, the agencies have requested additional cost information in this proposed rule and, upon receipt of that information, will reevaluate whether a cost-benefit analysis is required for the final rule.

Regulatory Flexibility Act Analysis

Under the Regulatory Flexibility Act, the publication of a rule requires the preparation of a regulatory flexibility analysis if such rule could have a significant economic impact on a substantial number of small entities. For the reasons discussed above, the Access Board and the Department of Justice have determined independently that this proposed rule is not expected to have a significant economic impact on a substantial number of small entities. Accordingly, a regulatory flexibility analysis is not required.

Federalism Assessment

The Access Board and the Department of Justice also have determined independently that this rule will not have sufficient federalism implications to require a federalism assessment under Executive Order 12612.

Enhancing the Intergovernmental Partnership

Executive Order 12875, Enhancing the Intergovernmental Partnership, encourages Federal agencies to consult with state and local governments affected by the implementation of legislation. Prior to the issuance of this NPRM, the Access Board issued an ANPRM on February 3, 1993. (*See* 58 FR 6924.) The ANPRM sought comment on general issues and also requested information on standards and guidelines for children's environments currently in use, building products and technologies currently available that specifically serve children, and elements and features unique to children's environments that may merit specific attention. The Access Board received a number of comments from various state and local governments. Those comments are discussed in the section-by-section analysis above. In addition, the Access Board specifically contacted the departments of education in a number of states regarding this rulemaking. Furthermore, the Access Board and the Department of Justice are forwarding a copy of this NPRM to the departments of education, state education associations, the state building code authorities, and other various responsible agencies in each of the 50 states seeking their input and comment on the proposed rule. Interested state and local government agencies, as well as the general public, may obtain technical assistance regarding this NPRM by contacting the Access Board at (202) 272–5434 or (800) 872–2253 (voice) and pressing 2 on the telephone keypad or (202) 272–5449 or (800) 993–2822 (TTY).

Text of Proposed Common Rule

Appendix A to part is proposed to be amended by adding a new section 15 and by adding A15.1 and A15.6.2 in the appendix to appendix A to read as follows:

* * * * *

15. CHILDREN'S FACILITIES.

15.1* Application.

This section applies to facilities, or portions of facilities, constructed according to children's dimensions and anthropometrics for ages 2 through 12. Facilities covered by this section shall comply with the applicable requirements of 4.1 through 4.35 and the special application sections, except as modified or otherwise provided in this section. All public and common use areas covered by this section are required to be designed and constructed to comply with 4.1 through 4.35, except

as modified or otherwise provided in this section. Accessible elements and spaces covered by this section shall be on an accessible route complying with 4.3, 15.3, and 15.4. The specifications in this section are based on children's dimensions and anthropometrics.

The phrase ''constructed according to children's dimensions and anthropometrics'' means where the construction of a facility reflects the size and dimensions, reach ranges, level of strength and stamina, or other characteristics of children. Facilities constructed that do not reflect children's characteristics are not covered by this section.

15.2 Reach Ranges.

15.2.1 General. The requirements in 4.2.5 and 4.2.6 are modified by the following provisions.

15.2.2 Forward and Side Reach. The high forward or high side reach, and the low forward or low side reach shall comply with A, B, or C in the table below. Selection of A, B, or C should correspond to the age range of the primary user group.

FORWARD AND SIDE REACH

	High reach (not more than)	Low reach (not less than)
A—Ages 2 through 4.	36 in (915 mm)	20 in (510 mm).
B—Ages 5 through 8.	40 in (1015 mm)	18 in (455 mm).
C—Ages 9 through 12.	44 in (1120 mm)	16 in (405 mm).

15.3 Protruding Objects.

The requirements in 4.4.1 are modified by 15.3. Objects projecting from walls with their leading edges between 12 in and 80 in (305 mm and 2030 mm) above the finish floor shall protrude no more than 4 in (100 mm) into walks, halls, corridors, passageways, or aisles. Objects mounted with their leading edges at or below 12 in (305 mm) above the finish floor may protrude any amount. Free-standing objects mounted on posts or pylons may overhang 12 in (305 mm) maximum from 12 in to 80 in (305 mm to 2030 mm) above the ground or finish floor. Protruding objects shall not reduce the clear width of an accessible route or maneuvering space.

15.4 Handrails at Ramps and Stairs.

15.4.1 General. In addition to the handrails required by 4.8 and 4.9, a second set of handrails shall be provided complying with 4.8.5 or 4.9.4 and 4.26.2, except as modified by the following provisions.

15.4.2 Height. The top of handrail gripping surfaces shall be mounted between 20 in and 28 in (510 mm and 710 mm) above ramp surfaces or stair nosings.

15.4.3 Size. The gripping surfaces of handrails shall have a diameter or width of 1 in to 1¼ in (25 mm to 30 mm), or the shape shall provide an equivalent gripping surface.

15.5 Drinking Fountains and Water Coolers.

15.5.1 General. Drinking fountains or water coolers required to be wheelchair accessible by 4.1 shall comply with 4.15, except as modified by 15.5. The requirements in 4.15.2 and 4.15.5 are modified by the following provisions.

15.5.2 Spout Height. Spouts shall be no higher than 30 in (760 mm), measured from the floor or ground surface to the spout outlet.

15.5.3 Clearances. Wall-mounted and post-mounted cantilevered units shall have a clear knee space between the bottom of the apron and the floor or ground at least 24 in (610 mm) high and 8 in (205 mm) deep, measured from the leading edge of the fountain. Clear toe space shall be 12 in (305 mm) high minimum, measured from the finish floor. Such units shall also have a minimum clear floor space 30 in by 48 in (760 mm by 1220 mm) to allow a forward approach to the unit. The clear floor space may extend a maximum of 14 in (305 mm) underneath the fountain.

15.6 Water Closets, Toilet Seats, Grab Bars, and Toilet Paper Dispensers.

15.6.1 General. Water closets required to be accessible by 4.22.4 shall comply with 4.16, except as modified by 15.6. The requirements in 4.16 and 4.26.2 are modified by the following provisions.

15.6.2* Placement. The centerline and seat height of the water closet and the centerline height of the grab bars and toilet paper dispenser shall comply with A, B, or C in the table below. Selection of A, B, or C should correspond to the age range of the primary user group. The centerline requirements in the table do not apply to the 36 in (915 mm) wide alternate stall permitted in alterations by 4.1.6(3)(e)(ii). The centerline of water closets shall be measured from one side wall or stall partition.

SPECIFICATIONS FOR WATER CLOSETS, TOILET SEATS, GRAB BARS, AND TOILET PAPER DISPENSERS

	Water closet centerline	Toilet seat height	Grab bar height	Dispenser height
A (Ages 2 through 4)	12 in (305 mm)	11 in to 12 in (280 mm to 305 mm).	18 in to 20 in (455 mm to 510 mm).	14 in (355 mm).
B (Ages 5 through 8)	12 in to 15 in (305 mm to 380 mm).	12 in to 15 in (305 mm to 380 mm).	20 in to 25 in (510 mm to 635 mm).	14 in to 17 in (355 mm to 430 mm).
C (Ages 9 through 12)	15 in to 18 in (380 mm to 455 mm).	15 in to 17 in (380 mm to 430 mm).	25 in to 27 in (635 mm to 685 mm).	17 in to 19 in (430 mm to 485 mm).

15.6.3 Grab Bar Size. The diameter or width of the gripping surface of a grab bar shall be 1 in to 1¼ in (25 mm to 30 mm), or the shape shall have an equivalent gripping surface.

15.6.4 Flush Controls. Flush controls shall be located within the reach ranges specified by 15.2.

15.7 Toilet Stalls.

15.7.1 General. Toilet stalls required to be accessible by 4.22.4 shall comply with 4.17, except as modified by 15.7. The requirements in 4.17.2, 4.17.3,

4.17.4, 4.17.6, and 4.26.2 are modified by the following provisions.

15.7.2 Water Closets. Water closets in accessible stalls shall comply with 15.6.

15.7.3 Depth. Standard stalls with floor- or wall-mounted water closets shall have a depth of 59 in (1500 mm) minimum. Standard stalls at the end of a row with floor- or wall-mounted water closets shall have a depth of 59 in (1500 mm) in addition to the minimum 36 in (915 mm) required for the stall door. Where provided in alterations, alternate stalls with floor- or wall-mounted water closets shall have a depth of 69 in (1745 mm) minimum.

15.7.4 Toe Clearance. In standard stalls of minimum dimension, the front partition and at least one side partition shall provide a toe clearance of 12 in (305 mm) minimum above the finish floor. If the depth of the stall is greater than 60 in (1525 mm), then the toe space is not required.

15.7.5 Grab Bars. Grab bar mounting heights shall comply with the heights specified in 15.6. The diameter or width of the gripping surfaces of a grab bar shall be 1 in to 1¼ in (25 mm to 30 mm), or the shape shall provide an equivalent gripping surface.

15.8 Lavatories and Mirrors.

15.8.1 General. Lavatories and mirrors required to be accessible by 4.22.6 and 4.23.6 shall comply with 4.19, except as modified by 15.8. The requirements in 4.19.2, 4.19.3, and 4.19.6 are modified by the following provisions.

15.8.2 Height and Clearances. Lavatories shall be mounted with the rim or counter surface no higher than 30 in (760 mm) above the finish floor. A clearance of 27 in (685 mm) minimum measured from the finish floor to the bottom of the apron shall be provided. Minimum clear knee space 24 in (610 mm) high, measured from the finish floor, and 8 in (205 mm) deep, measured from the leading edge of the lavatory, shall be provided. Clear toe space shall be 12 in (305 mm) high minimum, measured from the finish floor.

15.8.3 Clear Floor Space. Clear floor space shall extend a maximum of 14 in (355 mm) underneath the lavatory.

15.8.4 Mirrors. Mirrors shall be mounted with the bottom edge of the reflecting surface no higher than 34 in (865 mm) above the finish floor.

15.9 Storage.

15.9.1 General. Fixed storage facilities such as lockers, cabinets, shelves, closets, and drawers required to be accessible by 4.1 shall comply with 4.25, except as modified by 15.9. The requirements in 4.25.3 are modified by the following provision.

15.9.2 Height. Accessible storage spaces shall be within at least one of the reach ranges specified in 15.2. Clothes rods, hooks, or shelves shall be a maximum of 36 in (915 mm) above the finish floor for a side approach.

15.10 Fixed or Built-in Seating and Tables.

15.10.1 General. Fixed or built-in seating or tables required to be accessible by 4.1 shall comply with 4.32, except as modified by 15.10. The requirements in 4.32.2, 4.32.3, and 4.32.4 are modified by the following provisions.

15.10.2 Seating. Clear floor space shall not overlap knee space by more than 14 in (355 mm).

15.10.3 Knee Clearances. Knee clearance at least 24 in (610 mm) high, 30 in (760 mm) wide, and 14 in (355 mm) deep shall be provided.

15.10.4 Height of Tables or Counters. The tops of accessible tables and counters shall be from 26 in to 30 in (660 mm to 760 mm) above the finish floor or ground.

Appendix

* * * * *

A15.1 Application.

Section 15 modifies the technical requirements in section 4. This section applies to facilities, or portions thereof, constructed according to children's dimensions and anthropometrics for ages 2 through 12. State and local codes and guidelines, as well as best practices, often specify that facilities be designed to accommodate children rather than adults, particularly where children are the primary population served by a facility. These codes, guidelines, and best practices may specify lower mounting heights for certain elements used primarily by children, such as water fountains, lavatories, and toilets. This section provides accessibility requirements for these elements and is intended to apply where state or local codes, guidelines, or best practices specify design for children.

The phrase ''constructed according to children's dimensions and anthropometrics'' means where the construction of a facility reflects the size and dimensions, reach ranges, level of strength and stamina, or other characteristics of children, thus rendering such a facility more usable by children. Facilities constructed that do not reflect children's characteristics are not covered by section 15.

Section 15 also specifies that accessible elements and spaces constructed according to children's dimensions and anthropometrics shall be on an accessible route complying with 4.3, 15.3, and 15.4. Additional routes serving the children's area are not subject to the requirements in this section. Accessible routes subject to this section must comply with the requirements for protruding objects (15.3) and handrails at ramps and stairs (15.4). For example, a children's area may be located in a portion of a community center and may have elements and features constructed according to children's dimensions and anthropometrics, such as storage units, toilets, or lavatories. Where the accessible route serving the children's area includes a ramp, additional handrails for children must be provided. Additionally, objects along this accessible route that project from walls must comply with the requirements for protruding objects in 15.3. An accessible route complying with this section shall also be provided where individual elements are positioned at heights or locations based on children's sizes and dimensions, such as a drinking fountain in a shopping mall.

A15.6.2 Placement. The requirements for water closets, toilet seats, grab bars, and toilet paper dispensers in 15.6 reflect the differences in the size, stature, and reach ranges of children ages 2 through 12. Section 15.6.2 requires such elements to comply with the specifications in A, B, or C in the table provided. A, B, and C correspond to three age groups of children: 2 through 4, 5 through 8, and 9 through 12, respectively. To permit design discretion where toilet rooms may serve more than one age group, or where the age group of users does not correspond to the specific age groups listed in the table, this section specifies that selection of A, B, or C ''should'' correspond to the age of the primary user group. (*See* 3.4 General Terminology, regarding use of the term ''should.'')

The application of the specifications in A, B, or C in the table may allow flexibility when designing for more than one age group. For example, a water closet with centerline at 12 in (305 mm), toilet seat at 12 in (305 mm), grab bars at 20 in (510 mm), and dispenser at 14 in (355 mm) above the finish floor may be appropriate for A (ages 2 through 4) and B (ages 5 through 8). Similarly, a water closet with centerline at 15 in (380 mm), toilet seat at 15 in (380 mm), grab bars at 25 in (635 mm), and dispenser at 17 in (430 mm) above the finish floor may be appropriate for B (ages 5 through 8) and C (ages 9 through 12). Multiple accessible fixtures are not required in toilet rooms serving more than one age group.

Adoption of Proposed Common Rule

The agency specific proposals to adopt the proposed common rule, which appears at the end of the common preamble, are set forth below.

DEPARTMENT OF JUSTICE

Office of the Attorney General

28 CFR Part 38

List of Subjects in 28 CFR Part 38

Buildings and facilities, Civil rights, Individuals with disabilities, Intergovernmental relations.

Authority and Issuance

By the authority vested in me as Attorney General by 28 U.S.C. 509, 510; 5 U.S.C. 301; and 42 U.S.C. 12134, 12186, and for the reasons set forth in the common preamble, part 38 (originally proposed as part 37) of chapter I of title 28 of the Code of Federal Regulations, as proposed to be added at 59 FR 31816, June 20, 1994, is further proposed to be amended as set forth below:

PART 38—NONDISCRIMINATION ON THE BASIS OF DISABILITY IN STATE AND LOCAL GOVERNMENT SERVICES AND BY PUBLIC ACCOMMODATIONS AND IN COMMERCIAL FACILITIES

1. The authority citation for 28 CFR part 38 continues to read as follows:

Authority: 5 U.S.C. 301; 28 U.S.C. 509, 510; 42 U.S.C. 12134, 12186.

2. Appendix A to part 38 is amended as set forth at the end of the common preamble.

Dated: July 9, 1996.

Janet Reno,

Attorney General.

ARCHITECTURAL AND TRANSPORTATION BARRIERS COMPLIANCE BOARD

36 CFR Part 1191

List of Subjects in 36 CFR Part 1191

Buildings and facilities, Civil rights, Individuals with disabilities.

Authority and Issuance

For the reasons set forth in the common preamble, part 1191 of title 36 of the Code of Federal Regulations is proposed to be amended as follows:

PART 1191—AMERICANS WITH DISABILITIES ACT (ADA) ACCESSIBILITY GUIDELINES FOR BUILDINGS AND FACILITIES

1. The authority citation for 36 CFR part 1191 continues to read as follows:

Authority: 42 U.S.C. 12204.

2. Appendix A to part 1191 is amended as set forth at the end of the common preamble.

Authorized by vote of the Access Board on December 22, 1994.

Judith E. Heumann,

Chair, Architectural and Transportation Barriers Compliance Board.

[FR Doc. 96–18138 Filed 7–19–96; 8:45 am]

BILLING CODE 4410–01–P & 8150–01–P

federal register

Monday
July 22, 1996

Part III

Department of Agriculture

Agricultural Research Service

Agricultural Research Services' Strategic Plan; Notice

Agricultural Research Service

ARS Strategic Plan

AGENCY: Agricultural Research Service, Department of Agriculture.

ACTION: Request for Comments on the Agricultural Research Services' Draft Strategic Plan.

SUMMARY: The Agricultural Research Service, in compliance with the Government Performance and Results Act (GPRA) of 1993 (Pub. L. 103–62), has developed a five year strategic plan covering Fiscal Years 1998 to 2002. The proposed ARS Draft Strategic Plan presents the work of the Agency against five broad societal outcomes and twelve general goals/initiatives, most of the latter are taken, verbatim, from Section 801 ''Purposes of Agricultural Research, Extension, and Education'' of the Federal Agriculture Improvement and Reform Act of 1996 (Pub. L. 104–127). When finalized, the ARS Strategic Plan will be supplemented by one or more implementation plans that will link, in greater detail, the scientific work of the Agency to this plan. Within the U.S. Department of Agriculture, the Office of the Chief Financial Officer (CFO) has been given lead responsibility for securing Departmental, Congressional and Office of Management and Budget (OMB) review of Subagency plans. Each agency is responsible for securing input from its employees, customers, stakeholders, and partners. The finalized Strategic Plan will take effect on October 1, 1997. The ARS Draft Strategic Plan can also be found, electronically, on the ARS Home Page on Internet (http://www.ars.usda.gov).

DATES: Comments on the ARS Draft Strategic Plan must be submitted, in writing or electronically, to the addresses shown below by August 21, 1996.

ADDRESSES: Interested persons should submit comments to David A. Rust, Program Planning Advisor, Agricultural Research Service, Building 005, Room 112, 10300 Baltimore Road, Beltsville, Maryland 20705; FAX to 301–504–6191; or electronically DAR@ARS.USDA.GOV.

FOR FURTHER INFORMATION CONTACT: David A. Rust, Program Planning Advisor, Agricultural Research Service, Building 005, Room 112, 10300 Baltimore Road, Beltsville, Maryland 20705; FAX 301–504–6191; electronically DAR@ARS.USDA.GOV; or telephone 301–504–6233.

SUPPLEMENTARY INFORMATION: ARS is the principal in-house research agency of the U.S. Department of Agriculture. In Fiscal Year 1996, ARS received an appropriations from Congress of $710 million which supported 1,200 research projects at 104 locations involving approximately 1,950 scientists.

Dated: July 11, 1996.

Robert J. Reginato,

Associate Administrator.

Contents

Background

Introduction
Vision, Mission, Guiding Principles, and Values
Key External Factors
Key Internal Factors
Customers, Beneficiaries, Stakeholders, and Partners

Strategic Plan

ARS Outcomes, General Goals, Explanatory Statements, Specific Goals, Program Activities, and Performance Measures
Outcome 1. An agricultural production system that is highly competitive in the global economy
Outcome 2. A safe and secure food and fiber system
Outcome 3. A healthy and properly nourished population
Outcome 4. Greater harmony between agriculture and the environment
Outcome 5. Enhanced economic opportunity and quality of life for farmers, ranchers, rural citizens and communities
Initiatives, Explanatory Statements, Specific Initiatives, Program Activities, and Performance Measures
Initiative 1. Support Education
Initiative 2. National Agricultural Library
Initiative 3. Creative Leadership
ARS Resource Summary
ARS Customer Pledge

Background

Introduction

ARS Approach to GPRA

Since 1983, ARS has developed as series of multiyear strategic plans to help guide development and management of the agency's work. In 1993, the Government Performance and Results Act (GPRA), Public Law 103–62, was enacted. It seeks to make all Federal departments and agencies more accountable to Congress and the U.S. taxpayers. The ARS Strategic Plan, covering fiscal years 1998–2002, was developed in accordance with the GPRA requirements.

In the spring of 1994, the agency established a work group to study how best to implement GPRA within ARS. After completion of the work group's report, ARS undertook an extensive outreach effort to gain individual input from a broad cross section of the agency's customers, stakeholders, and partners. This visioning process consisted of a pilot conference in January 1995, followed by five regional conferences held in June and July of 1995. The conferences brought together over 400 participants who worked in more than 30 breakout groups to provide individual input regarding:

- The key forces that will influence American agriculture during the next 20 to 25 years.
- How these changes will affect agricultural research.
- More specifically how ARS should respond to these changes.

Using input and information gathered from this process ARS identified 10 major issue areas that will affect agriculture and agricultural research over the next 25 years:

International/Global Issues

- Competition will increase for international markets and resources.
- International trade and treaties will influence the profitability of U.S. agriculture.
- The political climate in foreign nations will impact U.S. agriculture.

Population/Demographics Issues

- Growth in world population will increase demand for food, fiber, energy, and land.

Environmental Issues

- Resource competition among agricultural and industrial users.
- Need to address current and potential environmental pollution.
- Impact of pesticide and herbicide use.
- Ecosystem management.
- Maintaining biological and genetic diversity.

Sustainability of Production Systems Issues

- Need to respond to changes in biological resistance (resistance to pesticides).
- Need to address environmental restrictions to expand the range where plants can grow in response to changes in climate and other circumstances.

Economic Issues

- The profitability of U.S. agriculture is impacted by the cost of labor, the transportation and distribution of foods, and the quantity of food versus its price.
- The concern over the federal deficit will continue to impact agricultural subsidy programs.
- The trend in U.S. agriculture is a shift from family farms to agribusiness/corporate farms.

Government and Political Issues

- Budget constraints are changing the relationship between the federal, state, and private sectors.

• Changes in demographics are resulting in decreased political influence for the agriculture community.

• There is a declining knowledge of agriculture among agricultural policy makers.

• There is concern about the type of regulations, their interpretation, and the resulting increase in litigation.

• Maintaining a safe and secure food supply will continue to be a critical element of national security.

Consumer/Societal Issues

• Consumers changing preferences, their needs and expectations for food security, and their demands for better quality of life will impact U.S. agriculture.

• U.S. agriculture needs to increase acceptance of new technologies and new products among consumers and to allay their fears of science and technology.

• Consumer perceptions and concerns over bioethics and animal welfare will impact U.S. agriculture.

Food and Health Issues

• Issues concerning nutrition, disease prevention, and food security will influence U.S. food production.

—Food security issues encompass food safety, quantity, and quality.

• Changing dietary consumption patterns will impact U.S. food production.

Technological Advancement Issues

• Some of the key technological issues influencing U.S. agriculture are:

—Information and communication technology

—New uses of food and fiber and non-food uses of agriculture products

—Development of new production and delivery systems

—Intellectual property rights

• The concern over ethics of biotechnology and genetic engineering will influence the development of new U.S. technology and its implementation.

Education and Information Issues

• Education programs need to be developed to address the following issues that influence the American public.

—The environment

—The economy

—Technology

—Nutrition, food and health

—Science and agriculture

In analyzing the input and information gathered at the five conferences, nine major roles were identified for ARS in meeting the research needs of the next 25 years. The nine roles are as follows: provide leadership in the agricultural research agenda; strengthen relationships with ARS partners; educate and relate to consumers and other constituents; develop and transfer information systems and technology; carry out and support strong, relevant science; focus on long-term, high-risk research; address environmental issues; promote interdisciplinary team and systems approaches; and develop and strengthen institutional and human resources.

The ARS guiding principles that appear on page 14 are based on the input and information gathered at the visioning conferences. In addition, the visioning process provides a broad thematic framework that runs throughout the ARS strategic plan. Shortly after the visioning process was completed, the agency established a strategic planning team (SPT) charged with drafting a new ARS strategic plan that meets the GPRA requirements.

GPRA Outcomes and General Goals

In GPRA, Congress intended for each agency to identify the societal impact or outcome of its work. These outcomes are usually long-term and reflect the agency's general direction and purpose.

ARS' research focuses on achieving five broad outcomes that parallel almost verbatim the outcomes identified in the strategic plan of the Research, Education, and Economics (REE) mission area. GPRA calls on each agency to establish general goals that will contribute to achieving the long-term outcomes and that shape and drive the work of the agency during the 5 years covered by the plan. ARS derives its general goals and some of its initiatives from statutory language, specifically the ''Purposes of Agricultural Research, Extension, and Education'' set forth in section 801 of the Federal Agriculture Improvement and Reform Act of 1996.

The Agricultural Research Service

The Agricultural Research Service (ARS) is the principal in-house research agency of the U.S. Department of Agriculture (USDA). Congress first authorized federally supported agricultural research in the Organic Act of 1862, which established what is now USDA. That statute directed the Commissioner of Agriculture ''* * * To acquire and preserve in his Department all information he can obtain by means of books and correspondence, and by practical and scientific experiments, * * *'' The scope of USDA's agricultural research programs has been expanded and extended more than 60 times in the 134 years since the Department was created.

Before the enactment of large scale crop support and nutrition programs, agricultural research was a substantial part of the Department's budget. Shortly before World War II, USDA received about 40 percent of all Federal funds appropriated for research. To better support the war effort, the Department's various research components were brought together into the Agricultural Research Administration (ARA). In 1953 the ARA was reorganized into the Agricultural Research Service. In FY 1996, ARS received an appropriation from Congress of $710 million (less than 1 percent of the Federal research funds appropriated for that year) which supported 1,200 research projects at 104 locations involving about 1,950 scientists.

ARS Research

ARS research has long been associated with higher yields and more environmentally sensitive farming techniques. But the impact of ARS research extends far beyond the farm gate and the dinner table. Agricultural research is as much about human health as it is about growing corn. For example, ARS recently developed a fat substitute called Oatrim. Not only does this technology benefit farmers by providing a new use for oats, it enables processors to produce tastier low-fat foods. Consumers may reap the biggest benefits: Oatrim-rich diets lower the bad (LDL) type of cholesterol without decreasing the good (HDL) type, and it improves glucose tolerance. ARS research is also as much about development of industrial products such as printing ink from crops like soybeans as it is about development of high-yielding wheat varieties. And as with Oatrim, printing inks made from 100-percent soybean oil instead of petroleum solve more than one problem: Unlike petroleum, soybeans are a renewable resource, and this technology diversifies markets for soybean farmers and choices for ink manufacturers and printers.

ARS research provides solutions to a wide range of problems related to agriculture—problems requiring long-term commitment of resources or unlikely to have solutions with quick commercial payoff that would tempt private industry to do the research. These problems range from the ongoing battle to protect crops and livestock from costly pests and diseases to improving quality and safety of agricultural commodities and products determining the right mix of nutrients for humans from infancy to old age,

making the best use of natural resources, and all the while ensuring profitability for producers and processors while keeping costs down for consumers.

To develop these solutions, ARS scientists carry out basic, applied, and developmental research. These are inextricably linked. Scientists cannot do applied and developmental research without the foundation provided by basic research; and ARS basic research must point toward specific uses for new knowledge resulting from the research. Also, basic research is necessary in anticipation of new problems and to provide information needed for rational nationwide policies.

ARS scientists communicate research results and transfer new technologies from ARS to other scientists, institutions of higher education, products and process developers, and consumers, producers, and other end users through:

Publications: ARS scientists write several thousand articles each year for scientific journals and trade magazines. Such publications are a primary means of sharing information with other scientists and are the first step in transferring results from the laboratory to everyday use. Equally important, peer review of articles published in scientific journals helps ensure that ARS research is of the highest quality.

Conferences, Workshops, and Consultations: ARS scientists participate in selected conferences and workshops each year to ensure timely exchange of information with other scientists in the same and related fields and to work with customers in identifying research needs and opportunities. They also correspond extensively with other scientists and customers via paper and electronic mail, serve as expert consultants both locally and nationally, and otherwise stay connected with their scientific and customer communities. An expanding ARS involvement with electronic communications networks such as the Internet ensures that agency scientists will be participants in this relatively low-cost global information exchange.

Cooperative Agreements and Patent Licenses: ARS aggressively pursues cooperative relationships with private industry, academia, and other Government agencies for further development of new technology. The agency also markets both patented and nonpatented technology for immediate use or further refinement. ARS continues to be an acknowledged leader among Federal agencies in technology transfer as judged by the relative number of patents, partnerships, patent licenses, and technology transfer awards.

International Collaboration

The combined government funding for agricultural research in foreign countries far exceeds U.S. Federal funding for agricultural research. Recognizing this resource, ARS has set up carefully selected international collaborations, consistent with ARS program goals. This has led to a cost-effective supplementation of ARS technology development and germplasm. At present, the agency has 368 cooperative linkages with 51 countries. Collaborations often result in co-publication of research results. Where appropriate, intellectual property is mutually protected with co-patents. Through its tactically constructed network of international research interchanges. ARS in cooperation with the U.S. Department of State, helps to advance techno-scientific diplomacy for the U.S. Government.

National Agricultural Library

The National Agricultural Library (NAL) was established by Congress in 1862. It is the largest agricultural library in the world and one of only four national libraries in the United States. In 1994 it became part of the Agricultural Research Service. The library's unique, comprehensive collection of more than 2.2 million volumes forms the fundamental base of knowledge on agriculture and related basic and applied sciences and social sciences for the Nation. Traditional as well as innovative and specialized information services and products enable customers to identify, locate, and obtain needed information on agriculture and related topics. Through preservation activities, NAL ensures that the collection is available for current and future use. NAL produces AGRICOLA (AGRICultural OnLine Access), a bibliographic database of more than 3 million citations to agriculture literature, and provides leadership in development and application of information technologies that help ensure access to knowledge and information such as gene maps.

Technology Transfer Activities

Products, techniques, and information generated from ARS research must be transferred to customers, if the United States is to maintain its global competitive edge in agriculture. The technology transfer process ranges from the controlled release of information via oral, written, or electronic form, to the establishment of research and development partnerships with private industry, other Government agencies, and universities. Intellectual property is guarded by patents and plant variety protection, and commercialization is achieved by patent licensing and Cooperative Research and Development Agreements (CRADA'S).

Vision, Mission, Guiding Principles, and Values

Vision

Leading America toward a better future through agricultural research and information.

Mission

Provide access to agricultural information and develop new knowledge and technology needed to solve technical agricultural problems of broad scope and high national priority to ensure adequate availability of high-quality, safe food, and other agricultural products to meet the nutritional needs of the American consumer, to sustain a viable and competitive food and agricultural economy, to enhance quality of life and economic opportunity for rural citizens and society as a whole, and to maintain a quality environment and natural resource base.

Guiding Principles

Provide leadership for the national agricultural research agenda.

Carry out and support excellent, relevant science.

Support long-term research to provide a foundation of problem solving.

Apply the science base to address critical emerging problems.

Provide the science base for informed policymaking.

Strenghten relationships with ARS partners.

Educate and relate to consumers and other constituents.

Respond to societal, consumer, and environmental concerns.

Promote interdisciplinary team and systems approaches.

Develop and strengthen institutional and human resources.

Develop and transfer information systems and technology.

Values

Accountability: We are responsible to the public.

Appreciation: We respect one another and value everyone's contribution.

Cooperation: We work with others to most effectively use available knowledge, resources, and technologies.

Creativity: We nurture and reward creativity.

Global Perspective: We encourage and promote an international perspective and global collaboration on agricultural issues.

Integrity: We are committed to the highest standards of honesty and ethical conduct.

Leadership: We promote leadership in information and agricultural science.

Objectivity: We are proud of our scientific objectivity and will continue to provide unbiased information.

Partnerships: We encourage partnerships with other organizations and individuals.

Quality: We are dedicated to the highest standards of quality in agricultural research and information dissemination.

Relevance: We respond to the needs of the agricultural community and all of society.

Service: We listen to our customers, both internal and external, and provide them quality scientific research, technologies, and information.

Sharing: We are committed to share information broadly and in a timely fashion.

Strategy: We shape the future by strategically positioning our resources and capabilities.

Teamwork: We support teams that approach holistically by looking at the total implications of their work.

Key External Factors

Consumer, Socio-Economic, and Policy Trends

The abundance and affordability of the American food supply is chiefly due to U.S. agricultural research. The Nation's ability to sustain this plentiful and inexpensive food supply continues to be paramount. But in recent years, consumer and producer attention has expanded somewhat to other areas of concern such as food safety and quality, the relationship of agriculture and the environment, the profitability of the agricultural enterprise, the impact of government regulations, land use restrictions, and economic options that diminish the supply of farmable, grazable land.

The long-term sustainability of the Nation's food and fiber production systems will be determined not only by the continued profitability of farming and ranching, but also by how these production systems affect the environment. The capacity of U.S. agriculture to adapt to environmental changes is also a concern as are the availability and quality of natural resources. Another key environmental issue is how human activities affect weather patterns, atmospheric composition, and soil and water quality and productivity.

Global population increases, demographic changes, and economic growth will substantially increase the demand for agricultural products. These changes should promote development of new markets. At the same time, increased agricultural efficiency in other countries will require that U.S. agriculture be more competitive. Meanwhile, budget deficits and external pressures on the domestic economy may reduce funding for agricultural research in both the public and private sectors.

Congressional Support

The ability of ARS to respond to the many and diverse needs of producers and consumers is determined by congressional appropriations. Adjusted for inflation, these appropriated funds are substantially smaller now than they were two to three decades ago. As a consequence of inflation and the higher operating costs associated with advances in research equipment and techniques, the ARS scientific workforce, which reached a maximum of about 3,400 scientists in 1970, decreased by almost 40 percent during the following 25 years. In recent years, Congressional appropriations, expressed in current dollars, have remained static. Because of widespread concern about Federal budget deficits, and the commitment by both the Administration and the Congress to reduce Federal expenditures, future ARS budgets are expected to remain at or near the current level of $710 million. Even with the current low rate of inflation, this scenario is expected to lead to further decreases in both the strength of the scientific workforce and the scope of the research program.

Workforce Competition

The Department of Labor projects an increase of 19 percent in the size of the general workforce in the next decade, which is slightly lower than the rate of growth for the preceding decade. The labor market during this period is also expected to be highly comptetive for many occupations that require and advanced education, including scientists, engineers, economists, and computer specialists. The high earning potential of professions, such as law and medicine, will continue to make a career in science less attractive to many young men and women who have the creative intelligence needed for professional success in agricultural research. Consequently, a major emphasis on recruitment, student employment, upward mobility, and training programs will be needed to attract and retain a quality workforce. The trend toward increasing workforce diversity is also expected to continue, and opportunities for encouraging women and minorities into careers in science, engineering, and economics will need to be given a high priority.

Key Internal Factors

Facilities

ARS owns and manages nearly 3,000 laboratory and office buildings and about 400,00 acres of land in support of its research mission carried out at 104 domestic and foreign locations. The quality of ARS facilities' infrastructure directly affects the ability of ARS scientists to accomplish their research mission objectives and projects. ARS implemented a comprehensive facilities modernization program through which it determines priorities for allocation of resources for facilities modernization related to and consistent with the research priorities of the agency.

In addition, ARS is currently participating in the Under Secretary's Agriculture Research Facilities Study Commission. The commission is charged with reviewing existing and proposed federally funded facilities to determine which ones should be closed, consolidated, or modernized.

Information Infrastructure

The confluence of computers, advanced communications, and space technology has brought about an information systems revolution that is resulting in change comparable to that which occurred during the Industrial Revolution. The National Information Infrastructure (NII) will have the capacity to transmit information anywhere in the world at both high and low speeds, in a variety of data formats, including image, voice, and video.

Scientists searching for research information will find it on the Internet; companies searching for new research findings and technology will find them on the Internet. Information is a key to opportunities and an economic resource. Those who learn to exploit database technology and electronic networks as a utility will be the ones to get ahead.

As one example, the NII presents a unique opportunity to the National Agricultural Library (NAL). NAL has traditionally collected, managed, and housed food and agricultural research information to respond to requests by scientists, educators, consumers, and other constituents. But accumulation is no longer the answer: proper access is. Strategic alliances and partnerships are required to capitalize on the greater breadth of information available, while at the same time targeting audiences and tailoring information and delivery

formats to meet the needs of internal and external customers.

Human Resources

ARS will need to continue using innovative approaches to human resources management to attract and retain critical core scientific, technical, and support capability. To meet the agency's human resources requirements and maintain the quality, relevance, and excellence of its core research programs, ARS must ensure continued innovations in human resources management such as the USDA' ARS and Forest Service Demonstration Project and the ARS Research Peer Evaluation System as a part of its overall strategic plan.

Core Capabilities

ARS' policy is to maintain the essential combination of scientific expertise, fiscal and information resources, and facilities required to meet the needs of the agency's national programs. These core capabilities are a defining feature of the agency and can be mobilized to address national crises and other emerging problems.

Customers, Beneficiaries, Stakeholders, and Partners

A listing of ARS' customers, beneficiaries, stakeholders, and partners is shown below. Although the list is constantly changing, it gives an indication of the breadth of ARS' customer base. Sometimes the same organization can be a customer, beneficiary, stakeholder, and/or partner.

Customers—Individuals or organizations that directly use ARS services.

Producers and processors
National and international organizations
  Advocacy groups
  Commodity and futures markets
  International trade organizations
  International science and research organizations
Legislative Branch
Executive Branch
U.S. Department of Agriculture
  Secretary of Agriculture
  Other mission areas
  Action and regulatory agencies
  Office of Budget and Program Analysis
  Inspector General
  Chief Financial Officer
Other Federal agencies
Scientific community
Medical community
Health and dietary community
State and local Governments
News media

Beneficiaries—Individuals whose well-being is enhanced by the agency's activities.

Domestic consumers
Foreign consumers of U.S. agricultural exports and technologies.

Stakeholders—Orginzations or individuals that have an interest in the work of ARS but do not directly use the agency's products.

Legislative branch
Executive branch
ARS employees
  National and international organizations
  Producer and processor organizations
  Food and commodity organizations
  Foreign countries/governments
  Trade organizations
  Environmental organizations
  Retail organizations
  Consumer organizations

Partners—Organizations that ARS works with collaboratively.

Institutions of higher education
Federal research agencies
Private industry

Strategic Plan

ARS Outcomes

ARS' general goals and specific goals are focused on achieving five outcomes, which are expressions of long-term desirable societal results toward which the work of ARS is ultimately directed. The five ARS outcomes parallel, almost verbatim, the outcomes identified in the REE mission area strategic plan. The ARS general goals directly support the agency's ongoing efforts to achieve these five broad societal outcomes. Under each outcome is a brief explanatory statement that describes how ARS relates the outcome to the work of the agency. In addition, there are performance measures that indicate progress towards achieving each outcome.

General Goals and Explanatory Statements

Under each outcome is one or more general goals and a brief explanatory statement that describes how ARS interprets the general goal and relates it to the work of the agency. ARS derives its general goals and some of its initiatives from statutory language, specifically the ''Purposes of Agricultural Research, Extension, and Education'' set forth in section 801 of the Federal Agriculture Improvement and Return Act of 1996. The general goals are broad enough to allow activities to overlap. In those instances, explanatory statements cross-reference the general goals where certain areas of related research would be covered. Each general goal has been given a short title.

Specific Goals

Under each of the ARS general goals there are several subgoals. These focus the general goal on the mission and work of ARS. Many departments and agencies are using the term ''objective'' to identify their subgoals. ARS has an existing classification system that uses the term ''objective'' to describe areas of research. To avoid confusion, the ARS strategic plan uses the designation ''specific goal.'' Each specific goal has been given a short title.

Program Activities

GPRA requires agencies to describe how the goals are to be achieved and how the performance measures relate to the general goals. The program activities describe briefly and broadly what activities ARS will undertake to accomplish the specific and general goals.

Performance Measures

The performance measures describe specific achievements that indicate progress toward reaching the goals.

Agencywide Performance Measures

The following performance measures are across the agency (not broken out by outcome or goal) over the 5 years covered by the plan.

—200 new patent applications*
—250 new CRADAs
—100 new Licenses
—650 new interagency agreements
—350 new plant germplasm releases to industry for further development

** 1,750 postdoctoral students will be involved in ARS research activities; 10 percent will be hired as full-time employees of the agency.

Conduct 2,250 reviews under the research position evaluation system (RPES) to ensure the quality of the agency's scientists; 95 percent will achieve fully successful to outstanding ratings and 40 percent will be found qualified to work at a higher level of scientific inquiry.

Conduct 1,250 peer reviews of research projects.

Conduct 100 location reviews at research laboratories.

Outcome 1. An agricultural production system that is highly competitive in the global economy.

Explanatory Statement: ARS will conduct research designed to generate new knowledge; improve production systems; enhance resource efficiencies; improve processing quality, performance, and the value of commodities; and develop technologies to reduce nontariff trade barriers. The national needs for scientific agricultural

information will be met in a timely manner. U.S. agricultural producers and processors will have access to current knowledge and technologies.

Performance Goals: During the 5 years covered by this strategic plan, ARS will report:

• In basic research.

—1,300 scientific papers published in refereed journals

—1,100 presentations to scientific organizations

—50 basic research accomplishments with significant potential long-term benefits to U.S. agricultural industry and American society

• In applied research.

—270 scientific papers published in refereed journals

—230 presentations to scientific organizations

—50 applied research accomplishments with significant potential long-term benefits to U.S. agricultural industry and American society

• In development research and technology transfers.

—New patent applications*

—New CRADAs*

—New licenses*

—New interagency agreements*

—New plant germplasm releases to industry for further development*

• In nonformal education.

—95 percent of customer requests received and handled within established time frames

—12 presentations to lay and professional organizations

• In higher education.

—Knowledge and technologies promptly communicated to institutions of higher education within established time frames

—Graduate and postgraduate students involved in ARS research activities**

General Goal 1.1 Strengthen Competitiveness

''Enhance the competitiveness of the United States agriculture and food industry in an increasingly competitive world environment.''

Explanatory Statement: ARS will generate new knowledge and develop new and improved production systems with greater resource efficiencies; improve the processing quality, performance, and value of commodities to meet domestic and global market needs; develop technologies to eliminate trade barriers due to quarantine issues and other nontariff trade constraints; and develop sustainable and cost-competitive food and industrial commodity processing technologies and concepts.

Specific Goal 1.1.1 Cost-Effective Agricultural Program Systems

Develop new knowledge and integrated technologies for more efficient and economically sustainable agricultural production systems.

Program Activity: Integrate the production, processing, and marketing technologies and knowledge into systems that optimize resource management, improve environmental quality, and facilitate technology transfer.

Performance Measures: Demonstrate and transfer to users integrated systems. Demonstrate and transfer to users computer-based simulation models and decision-support systems.

Specific Goal 1.1.2 Postharvest Technologies

Develop technologies and processes to reduce or overcome nontariff trade and quarantine barriers.

Program Activity: Develop and evaluate alternative means of controlling or eliminating postharvest insects, diseases, and spoilage organisms in agricultural commodities and products.

Performance Measure: Demonstrate techniques to control or eliminate postharvest insects and diseases and increase market quality and product longevity.

Program Activity: Develop technologies to replace methyl bromide to meet phytosanitary requirements, and to improve export opportunities for agricultural commodities.

Performance Measure: Demonstrate technologies to control quarantine insects and diseases on fruit.

Program Activity: Develop diagnostic methods to identify weeds, diseases, and pests that must be controlled to permit the international movement of animals, plants, or animal and plant products.

Performance Measure: New and improved diagnostic tests are developed and available.

Specific Goal 1.1.3 Product Quality and Marketability

Improve quality, uniformity, value, and marketability of commodities and other agricultural products.

Program Activity: Support the mission of action/regulatory agencies by defining and characterizing the desired physical, chemical, and aesthetic properties of agricultural commodities.

Performance Measure: Provide knowledge and technology to expand and improve the grading systems for agricultural commodities and products.

Program Activity: Advance the technology for measuring important nutrients and other quality components.

Performance Measure: Demonstrate methods to measure the critical processing and end-use properties of agricultural commodities important to the agricultural marketing system and to the processing industry.

Specific Goal 1.1.4 International Technology Interchange

Develop a strategy for selective international research interchange to supplement ARS technology developments and strengthen competitiveness of U.S. agriculture.

Program Activity: Gain access to foreign technology developments through tactical selection of opportunities for international research cooperation coherent with ARS domestic programs.

Performance Measure: Strategic alliances formed with specific foreign institutions, leading to the joint development of germplasm and value-added technologies, mutually protected through intellectual property agreements.

General Goal 1.2 Develop New Uses and Products

''Develop new uses and new products for agricultural commodities, such as alternative fuels, and develop new crops'' Explanatory Statement: ARS will contribute to development of new and alternative crops, new food and nonfood uses and products from plants and animals, alternative fuels, and new processes and other technologies using these commodities.

Specific Goal 1.2.1 New and Alternative Crops

Develop new and alternative crops with economic and social value.

Program Activity: Introduce and genetically improve new and alternative crops to increase diversity of agricultural commodities and satisfy societal needs.

Performance Measure: Experimentally demonstrate genetically improved crops with potential for successful introduction.

Program Activity: Develop management practices for production, harvesting, and postharvest handling of new alternative crops.

Performance Measure: Experimentally demonstrate new and improved production, harvest and postharvest handling procedures of these crops.

Specific Goal 1.2.2 New Uses and Products

Develop new food and nonfood uses and products from plants and animals,

and new processes and other technologies that add value.

Program Activity: Improve process technologies and develop new bioproducts and uses that will increase the demand for agricultural commodities.

Performance Measure: Experimentally demonstrate improvements in processing technologies and develop new bioproducts and uses that have potential to increase demand for agricultural commodities.

Outcome 2. A Safe and Secure Food and Fiber System

Explanatory Statement: ARS will conduct research designed to generate knowledge regarding new and improved management practices, pest management strategies, sustainable production systems, and the control of potential contaminants. Food safety research seeks ways to assess and control potentially harmful food contaminants. These activities will ensure a safe, plentiful, diverse, and affordable supply of food, fiber and other agricultural products.

Performance Goals: During the 5 years covered by this strategic plan, ARS will report:

• In basic research.

—2,470 scientific papers published in refereed journals
—2,090 presentations to scientific organizations
—50 basic research accomplishments with significant potential long-term benefits to U.S. agricultural industry and American society

• In applied research.

—435 scientific papers published in refereed journals
—365 presentations to scientific organizations
—50 applied research accomplishments with significant potential long-term benefits to U.S. agricultural industry and American society

• In developmental research and technology transfers.

—New patent applications*
—New CRADAs*
—New licenses*
—New interagency agreements*
—New plant germplasm release to industry for further development*

• In nonformal education.

—95 percent of customer requests received and handled within established time frames
—12 presentations to lay and professional organizations

• In higher education.

—knowledge and technologies promptly communicated to institutions of higher education within established time frames
—graduate and postgraduate students involved in ARS research activities**

General Goal 2.1 Secure Food and Fiber System

Maintain a safe and secure food and fiber system that meets the Nation's needs now and in the future.

Explantory Statement: ARS' research program will conserve and enhance genetic resources and improve the efficiency of agricultural production and processing systems to provide America with a safe, adequate, secure, affordable and nutritious supply of food and fiber.

Specific Goal 2.1.1 Plant and Animal Production Systems

Improve efficiency of agricultural production and protection systems to ensure the security of the Nation's food, fiber, and energy supply.

Program Activity: Enhance output of agricultural products through development of new production methods that maximize net economic returns and minimize input costs while using environmentally sustainable technologies.

Performance Measures: Demonstrate increases in productivity above current levels, using sustainable technologies.

Demonstrate a more efficient and cost-effective use of resource inputs while increasing productivity above current levels.

Develop and demonstrate new integrated technologies for improved protection of plants and animals.

Specific Goal 2.1.2 Plant and Animal Germplasm Resources

Acquire, preserve, evaluate, and enhance genetic resources and develop new knowledge and technologies to increase the productive capacity of plants and animals.

Program Activity: Develop improved genetic engineering and conventional methods and use them to produce new germplasm with increased production potential, improved resistance to pests and diseases, and enhanced productive capacity.

Performance Measures: Release of improved germplasm, varieties, and breeds based on effective use of genetic resources.

Improved methods for identifying useful properties of plants and animals and for manipulating the genes associated with these properties.

Program Activity: Collect, preserve, evaluate, and make available a diverse range of germplasm that increases genetic variability and enhances productive capacity and food and fiber security.

Performance Measures: Maintenance of collections of well-documented plant and animal germplasm of importance to U.S. agricultural security.

Specific Goal 2.1.3 Plant and Animal Biological Processes

Develop biologically based technologies to improve productivity, safety, nutrient content, and quality of plants and animals and their products.

Program Activity: Conduct fundamental and applied investigations of plant and animal biological processes that influence productivity, safety, nutrient content, and quality.

Performance Measure: Make technologies available for improving productivity, safety, and quality.

General Goal 2.2 Safe Food

''Maintain an adequate, nutritious, and safe supply of food to meet human nutritional needs and requirements.''

Explanatory Statement: ARS' food safety research program will assess the safety of animal and plant products and develop methods to control potential food contaminants. The human nutrition research activities covered in this general goal are addressed in outcome 3, general goal 3.

Specific Goal 2.2.1 Plant and Animal Product Safety

Provide knowledge and means for production of safe plant and animal products.

Program Activity: Develop methods to reduce toxin-producing and/or pathogenic bacteria and fungi, parasites, mycotoxins, chemical residues, and plant toxins.

Performance Measure: Transfer knowledge developed by ARS to industry and regulatory agencies.

Outcome 3. A healthy and properly nourished population.

Explanatory Statement: ARS will conduct research to generate new knowledge in human nutrition that will establish the relationship between diet and health, measure food consumption patterns, and develop new methods to measure the nutrient composition of food. The outcomes of these efforts will be a safe, and nutritious food supply and a knowledge base that enables people to make healthful food choices.

Performance Goals: During the 5 years covered by this strategic plan, ARS will report:

• In basic research.

—325 scientific papers published in refereed journals
—275 presentations to scientific organizations
—50 basic research accomplishments with significant potential long-term

benefits to U.S. agricultural industry and American society

• In applied research.

—25 scientific papers published in refereed journals
—22 presentations to scientific organizations
—50 applied research accomplishments with significant potential long-term benefits to U.S. agricultural industry and American society

• In developmental research and technology transfers.

—New patent applications*
—New CRADAs*
—New licenses*
—New interagency agreements*
—New plant germplasm releases to industry for further development*

• In nonformal education.

—95 percent of customer requests received and handled within established time frames
—12 presentations to lay and professional organizations

• In higher education.

—Knowledge and technologies promptly communicated to institutions of higher education within established time frames
—Graduate and postgraduate students involved in ARS research activities**

General Goal 3.1 Nutritious Food

''Maintain an adequate, nutritious, and safe supply of food to meet human nutritional needs and requirements.''

Explanatory Statement: ARS' human nutrition research program will establish the relationship between diet, nutritional status, and health throughout life and the contribution of diet to disease resistance and the reduction of disorders related to nutrition. The program will develop methods for determining food components and maintain national food composition databases. ARS will monitor food consumption, knowledge, attitudes, and behavior of the U.S. population and design and test techniques that enable people to improve their nutritional status. The food safety activities covered in this general goal are addressed in outcome 2.

Specific Goal 3.1.1 Human Nutrition Requirements

Determine requirements for nutrients and other food components of children, pregnant and lactating women, adults, and elderly of diverse racial and ethnic backgrounds.

Program Activity: Using population and survey data, human feeding studies, genetic models of metabolism, animal studies, and other methods, establish indicators of nutrient functions that show requirements and bioavailability of food components and their effects on health.

Performance Measure: Indicators of function determined and related to diet and health.

Specific Goal 3.1.2 Food Composition and Consumption

Develop techniques for determining food composition, maintain national food composition databases, monitor the food and nutrient consumption of the U.S. population, and develop and transfer effective nutrition intervention strategies.

Program Activity: Develop new methods for measuring selected nutrients and food components, conduct surveys of food consumption, analyze survey results to determine consumption of nutrients, and design strategies for improvement.

Performance Measure: Transfer new measurement techniques and data to users, release results of surveys, transfer effective nutrition intervention strategies.

Specific Goal 3.1.3 Nutritious Plant and Animal Products

Develop more nutritious plant and animal products for human consumption.

Program Activity: Improve the nutritional value of animal and plant products.

Performance Measure: Demonstrate improved nutritional quality.

Outcome 4. Greater harmony between agriculture and the environment.

Explanatory Statement: ARS will conduct multidisciplinary research to solve problems arising from the interaction between agriculture and the environment. New practices and technologies will be developed to conserve the Nation's natural resource base and balance production efficiency and environmental quality. Since environmental quality is a global problem, ARS will expand collaboration with foreign research institutions. The outcome will be technology and practices that will mitigate the adverse impact of agriculture on the environment.

Performance Goals: During the 5 years covered by this strategic plan, ARS will report:

• In basic research.

—1,070 scientific papers published in refereed journals
—900 presentations to scientific organizations
—50 basic research accomplishments with significant potential long-term benefits to U.S. agricultural industry and American society

• In applied research.

—215 scientific papers published in refereed journals
—180 presentations to scientific organizations
—50 applied research accomplishments with significant potential long-term benefits to U.S. agricultural industry and American society

• In developmental research and technology transfers.

—New patent applications *
—New CRADAs *
—New licenses *
—New interagency agreements *
—New plant germplasm releases to industry for further development *

• In nonformal education.

—95 percent of customer requests received and handled within established time frames
—12 presentations to lay and professional organizations

• In higher education.

—Knowledge and technologies promptly communicated to institutions of higher education within established time frames
—Graduate and postgraduate students will be involved in ARS research activities **

General Goal 4.1 Balance Agriculture and the Environment

''Increase the long-term productivity of the United States agriculture and food industry while maintaining and enhancing the natural resource base on which rural America and the United States agricultural economy depend.''

Explanatory Statement: ARS will conserve and enhance genetic resources, improve the efficiency of agricultural production systems, and develop new and improved high-quality food and nonfood agricultural and industrial products with improved pest and disease resistance and better adaptability to a wider range of climatic conditions. ARS will develop new and improved management practices, elucidate the potential effects of global climate change, and develop new ways to manage crop and animal production systems in the changing global climate, develop integrated pest management strategies, and integrated sustainable agricultural production systems to enhance the quality and productivity of the Nation's soil, water, and air, ensuring conservation of the natural resource bases essential to meet future needs.

Specific Goal 4.1.1 Natural Resource Quality and Quantity

Develop new and improved management practices that will enhance the quality and productivity of the Nation's soil, water, and air resources.

Program Activity: Develop on-farm agricultural practices and technologies to assess, predict, and improve soil, water, and air quality.

Performance Measure: Demonstrate agricultural management practices and technologies that protect and enhance the environment and natural resource base.

Program Activity: Develop agricultural practices and technologies at the watershed scale that conserve and maintain the quality of natural resources.

Performance Measure: Experimentally demonstrate the appropriateness of watershed-scale practices and technologies that protect the environment and natural resources.

Specific Goal 4.1.2 Global Climate Change

Increase understanding of the responses of terrestrial ecosystems to manmade and natural changes in the global environment.

Program Activity: Quantify the positive and negative aspects of agriculture's role in global change.

Performance Measure: Documentation of agriculture's effects on the global environment.

Program Activity: Assess and predict how changes in the global environment will affect agriculture.

Performance Measure: Documentation of how changes in the global environment affect agriculture.

Program Activity: Develop technologies that promote operational efficiency for agriculture in a changing global climate.

Performance Measure: Demonstrate techniques that can improve efficiency.

Specific Goal 4.1.3 Cropland and Rangeland Management Strategies

Develop cropland and rangeland management strategies that will improve quality and quantity of food and fiber products needed for U.S. competitiveness.

Program Activity: Develop concepts and practices for managing croplands and rangelands that will accommodate major increases in the quantity and quality of food and fiber products.

Performance Measures: Demonstrate cropland and rangeland management strategies that improve productivity and efficiency of croplands and rangelands.

Provide information directly to farmers and through public agencies and private organizations that will lead to adoption of improved cropland and rangeland management strategies.

General Goal 4.2 Risk Management

''Improve risk management in the United States agriculture industry.''

Explanatory Statement: ARS will address the multifaceted risks that are inherent in the U.S. food and fiber production and processing systems. They can have economic, environmental, and human health components. The risks associated with weather extremes, such as droughts and floods, often result in serious economic losses and major environmental damage. Serious crop and animal losses can also result from temperature extremes, hail, and other weather conditions. Crop and animal producers frequently suffer severe economic losses from diseases, insects, and other pests. This general goal is targeted toward minimizing and, where feasible, eliminating the impact of these risks through development of better animals and plants and improved production and processing systems. The presence of toxic elements and bacterial contaminants in the food supply is addressed under general goal 8.

Specific Goal 4.2.1 Economic and Environmental Risks

Reduce economic and environmental risks through improved management of agricultural production systems.

Program Activity: Develop strategies and methods for conserving soil, water, and energy; managing pests and diseases; and reducing plant and animal stresses to minimize economic and environmental risks in agricultural production systems.

Performance Measure: Risk-reduction strategies and methods transferred to the Nation's agricultural industry.

Specific Goal 4.2.2 Weather and Environmental Risks

Develop technologies for predicting and reducing the socio-economic costs and resource damages associated with extreme weather variability.

Program Activity: Develop improved strategies and technologies including crop residue management, irrigation systems, crop pest and disease forecast systems, and plant and animal genetic improvements that reduce the effects of extreme weather variability on food and fiber production.

Performance Measure: Improve strategies and technologies that reduce the effects of extreme weather variability.

General Goal 4.3 Safe Production and Processing

''Improve the safe production and processing of, and adding of value to, United States food and fiber resources using methods that maintain the balance between yield and environmental soundness.''

Explanatory Statement: ARS will develop new and improved management practices, integrated pest management strategies and integrated sustainable agricultural production systems to enhance the safety, quality, and productivity of the U.S. agricultural production and processing systems while protecting the National environment.

Specific Goal 4.3.1 Pest and Disease Management Strategies

Develop environmentally safe methods to prevent or control pests and diseases in plants and animals.

Program Activity: Develop knowledge and strategies for environmentally safe pest and disease management.

Performance Measure: Deliver integrated pest and disease management strategies that are cost effective and protect natural resources, human health, and the environment.

Specific Goal 4.3.2 Integrated Agricultural Production Systems

Deveop knowledge and integrated technologies for promoting the use of environmentally sustainable agricultural production systems.

Program Activity: Develop integrated agricultural production systems that sustain soil, water, air, plant, and animal resources and recognize the importance of social and economic considerations.

Performance Measures: Demonstrate the effectiveness of integrated agricultural production systems in the improvement of natural resources and protection of the environment.

Provide computer-based models and decision-support systems to farmers, public agencies, and private organizations.

Specific Goal 4.3.3 Waste Management and Utilization

Develop and transfer cost-effective technologies and systems to use agricultural, urban, and industrial wastes for production of food, fiber, and other products.

Program Activity: Improve waste-management practices and systems to recycle agricultural, municipal, and industrial wastes on agricultural lands in more profitable and environmentally beneficial ways.

Performance Measure: Demonstrate technologies to store, mix, compost, inoculate, incubate, and apply wastes to obtain consistent economic benefits while at the same time minimizing environmental degradation, nutrient loss, and noxious odors.

Program Activity: Devise technologies and processes that are cost effective on a small scale for converting agricultural residues and wastes into renewable energy and industrial feedstocks.

Performance Measure: Demonstrate the conversion of agricultural waste into liquid fuels and industrial feedstocks.

Outcome 5. Enhanced economic opportunity and quality of life for farmers, ranchers, rural citizens and communities.

Explanatory Statement: ARS will conduct research to identify new crops, products, technologies, and practices to increase profitability, expand markets, add value, and make small-scale processing capabilities available in rural communities. Access to technologies and information will be expanded and simplified so that farmers, ranchers, and rural residents can obtain information in a timely manner. Progress towards this outcome will be seen in the gradual strengthening of rural economic growth and improvements in the quality and stability of rural life.

Performance Goals: During the 5 years covered by this strategic plan, ARS will report:

• In basic research.

—1,285 scientific papers published in refereed journals

—1,080 presentations to scientific organizations

—50 basic research accomplishments with significant potential long-term benefits to U.S. agricultural industry and American society

• In applied research.

—150 scientific papers published in refereed journals

—125 presentations to scientific organizations

—50 applied research accomplishments with significant potential long-term benefits to U.S. agricultural industry and American society

• In development research and technology transfers.

—New patient applications*

—New CRADAs*

—New licenses*

—New interagency agreements*

—New plant germplasm releases to industry for further development*

• In nonformal education.

—95 percent of customer requests and received and handled within established time frames

—12 presentations to lay and professional organizations

• In higher education.

—knowledge and technologies promptly communicated to institutions of higher education within established time frames

—graduate and postgraduate students involved in ARS research activities**

General Goal 5.1 Economic Opportunity and Technology Transfer

Conduct'' agricultural research * * * to promote economic opportunity in rural communities and to meet the increasing demand for information and technology transfer throughout the United States agriculture industry.''

Explanatory Statement: ARS will integrate basic long-term research and targeted short-term research to develop new technologies, practices, and production enterprises that increase profits, enhance the farm ecosystem, and develop small-scale processing technologies to create value-added products from agricultural commodities. In addition, ARS will improve access to research information, target information dissemination, transfer technology more effectively, and enhance exchange of problem-solving information with domestic and international research organizations. While the introductory focus of this goal is expanding economic opportunities, ARS interprets the information and technology transfer provisions to apply across the board to all areas of agricultural research. Activities specifically related to the work of the National Agricultural Library are addressed in initiative 2.

Specific Goal 5.1.1 Rural Development Opportunities

Develop farming systems tailored to diverse agricultural production enterprises to enhance profits, sustainability, and environmental quality.

Program Activity: Devise new technologies and practices and adapt existing ones to create new and diverse farming enterprises, products, and markets.

Performance Measure: Experimentally demonstrate the successful operation of aquaculture systems, evaluate small-scale animal production systems, and enhance high-value horticultural products.

Specific Goal 5.1.2 Information Access and Delivery

Provide improved access to and dissemination of information to increase public knowledge and awareness of agricultural research to aid technology transfer, and to speed up sharing of new knowledge.

Program Activity: Expand the use of electronic means for information delivery.

Performance Measure: Make information on ARS research results and inventions available electronically via the Internet and similar resources.

Program Activity: Increase use of marketing techniques in targeting of public information and technology transfer products and activities.

Performance Measure: Provide more cost-effective and efficient public information and technology transfer.

Program Activity: Develop mechanisms to ensure proper consideration is given to public information and technology transfer needs during the planning and execution of research programs.

Performance Measure: Research programs include information and technology transfer considerations.

Specific Goal 5.1.3 Commercialize Research Results

Develop technology transfer systems that lead to commercialization of research results by industry.

Program Activity: Enhance the probability of success in commercializing ARS technology by ensuring that potential cooperators and businesses have access to non-ARS information on financing and business and product development.

Performance Measure: Provide small businesses with contacts and information on the programs available from public and private sources.

Program Activity: Increase the flexibility and decrease development time for technology transfer agreements.

Performance Measure: Expand the types of agreements used by ARS and delegate signatory authority to the lowest feasible level.

ARS Administrative, Programmatic and Management Initiatives

ARS' general goals and specific goals focus primarily on the Agency's research activities. The three ARS initiatives represent major activities that are of overaching important to the agency because they relate to and support all of the critical work of the agency. Each initiative has been given a short title.

Explanatory Statements

Under each initiative is a brief explanatory statement that describes how ARS interprets the initiative and relates it to the work of the agency.

Specific Initiatives

Under each of the initiatives are several subinitiatives that focus the

initiative on the mission and work of ARS. Each specific initiative has been given a short title.

Program Activities

The program activities describe briefly and broadly what activities ARS will undertake to accomplish each initiative.

Performance Measures

The performance measures describe specific achievements that indicate progress toward reaching the objectives of each initiative.

Administrative, Programmatic, and Management Initiatives

Initiative 1 Support Education

''Support higher education in agriculture to give the next generation of Americans the knowledge, technology, and applications necessary to enhance the competitiveness of United States agriculture.''

Explanatory Statement: ARS has a very limited role to play in directly supporting higher education. The agency provides training opportunities for graduate and postdoctoral students to enable them to gain valuable knowledge and experience. Some of these scientists are eventually hired as full-time employees where they serve to maintain and enhance the agency's core scientific capabilities. Most go on to serve U.S. agriculture in other Federal, State, and local agencies, private industry, or academia. See initiative 3, specific initiative 3.4 ARS, through the programs and services of the National Agricultural Library, provides access to information for institutions of higher education, their faculties, researchers, and students. See initiative 2. In addition, ARS supports public information, outreach, and educational activities. See general goal 5.1, specific goal 5.1.2, and initiative 2, specific initiative 2.1.

Initiative 2 National Agricultural Library

''Ensure and enhance worldwide access to agricultural information through the programs of the National Agricultural Library (NAL).''

Explanatory Statement: ARS, through the programs and services of the National Agricultural Library, will ensure that agricultural information essential to the Nation is acquired, organized, disseminated, and preserved for current and future use, and that appropriate advances are made to improve access to such information.

Specific Initiative 2.1 Access to Information

Collect, organize, and provide access to information that supports agricultural programs and responds to information needs.

Program Activity: Ensure that the NAL collection supports the information needs of current and future customers.

Performance Measures: Implemented selection guidelines for the electronic resources to be acquired and use by NAL.

Expanded representation of electronic formats such as Internet resources, online databases, and digital documents in AGRICOLA (NAL's bibliographic database of references to the literature of agriculture), and NAL's online catalog.

Program Activity: Provide access to agriculture-related information and resources over a network where connections are transparent to the customer.

Performance Measure: A gateway is provided to a large body of electronic information on agriculture over a network such as the Internet.

Program Activity: Collaborate with land-grant universities and other institutions of higher education to improve access to information for faculty and students.

Performance Measure: Demonstrate increased use of agricultural information by institutions of higher education.

Specific Initiative 2.2 Meet Customer Needs for Information

Anticipate and provide information products and services, including educational programs, that enable NAL's diverse customers to identify, locate, and obtain desired information on agricultural topics.

Program Activity: Use new technologies and methods to promote faster delivery of information services.

Performance Measure: The time for processing requests for services and delivering the information requested is further reduced.

Program Activity: Enhance the coverage, currency, and accessibility of NAL-produced databases.

Performance Measure: The gap between the time that information is published and made available in NAL-produced databases is further reduced.

Program Activity: Develop and implement a multifaceted, integrated training program that enables customers to take full advantage of current and emerging technologies and information systems.

Performance Measure: Expanded provision of Internet and other technology-related training programs for NAL customers.

Specific Initiative 2.3 Preservation of Significant Materials

Preserve significant and important works in agriculture and the fields related to agriculture to ensure availability of NAL's collections to current and future generations.

Program Activity: Work with the land-grant universities and other national and international organizations to coordinate preservation of USDA documents, agriculture-related publications of other Federal and State agencies, and other materials important to agriculture.

Performance Measure: Establishment of a national archive for agricultural literature that serves as a centralized storage facility for archival copies prepared by cooperators in the program.

Program Activity: Coordinate evaluation of digital preservation technologies and recommend policies and procedures for cooperators in the national preservation program for agricultural materials.

Performance Measure: Development of a program for monitoring quality of electronically archived materials to ensure that the data remain accessible.

Initiative 3 Creative Leadership

Promote excellence, relevance, and recognition of agricultural research through creative leadership in management and development of resources, communications systems, and partnerships with our customers and stakeholders.

Explanatory Statement: ARS research administrators, research leaders, and scientific staffs are responsible for promoting the excellence, relevance, and recognition of ARS research programs as part of the U.S. agricultural research community. This includes exercising leadership in developing a national research agenda, strengthening relationships with States and private partners, and effectively managing the agency's research infrastructure to preserve its core capacity for agricultural research.

Specific Initiative 3.1 Develop Research Agenda

Identify ARS program priorities and core research capabilities and use them to provide leadership in development of the coordinated REE and national research agendas.

Program Activity: Develop the annual performance plan as required by GPRA.

Performance Measure: The annual performance plan is delivered on time.

Program Activity: Recommend priorities for inclusion in the REE Coordinated Research Agenda.

Performance Measure: Meet REE deadlines for submission of material for inclusion in the Coordinated Research Agenda.

Program Activity: Articulate approaches to addressing the Nation's most critical agricultural research needs.

Performance Measure: Annual conferences of public and private individuals are convened to discuss major researchable issues in agriculture and to articulate approaches to addressing these problems.

Program Activity: Respond to urgent national problems that require reallocation of resources.

Performance Measure: Rapid responses to crises.

Specific Initiative 3.2 Customer Service

Improve customer service.

Program Activity: Develop and implement customer service plans, and evaluate their effectiveness.

Performance Measure: Improved customer satisfaction.

Program Activity: Solicit customer input in improving ARS programs, products, and services.

Performance Measure: Customer needs are identified.

Specific Initiative 3.3 Management of Facilities

Provide appropriately equipped Federal facilities required to support the research and information activities of ARS into the next century.

Program Activity: Develop criteria and priorities for the construction, consolidation, modernization, and closure of facilities.

Performance Measure: Criteria and priorities identified.

Specific Initiative 3.4 Maintenance of Core Research Capabilities

Develop and implement comprehensive human resource systems and policies to support and enhance ARS' core research capabilities while maintaining the flexibility to shift research and form interdisciplinary teams to address emerging problems.

Program Activity: Develop a comprehensive plan to assemble a core capability of scientific expertise to meet the needs of long-term research objectives and goals with the ability to respond quickly to emerging needs.

Provide training opportunities for graduate and postdoctoral students.

Performance Measures: Identify core capability requirements and develop a scientific staff to meet long-term research needs.

Establish a database of ARS experts by discipline and research areas of expertise.

Train 1,750 postdoctoral students, select 10 percent to fill fulltime positions.

Specific Initiative 3.5 Provide Administrative Support to REE

Serve as the lead agency in providing administrative and financial management services for Research, Education, and Economics.

Program Activity: Solicit customer input and develop strategic plan for administrative and financial management services.

Performance Measures: Customer participation in planning processes. Strategic plan is developed and communicated to REE customers.

Specific Initiative 3.6 Program Excellence and Relevance

Ensure excellence and relevance of ARS programs through a variety of comprehensive reviews.

Program Activity: Obtain broad-based peer review of all ARS research projects.

Performance Measure: Internal and external peer reviews are conducted on all research projects before implementation.

Program Activity: Periodically review the quality, quantity, and impact of the work of ARS scientists.

Performance Measure: Review of the productivity, quality, and impact of individual scientists is conducted as scheduled in the Research Position Evaluation System (RPES).

Program Activity: Continuous input on the relevance and quality of ARS research programs is solicited from peer scientists and users, evaluated, and implemented where appropriate to the ARS mission.

Performance Measure: Program reviews are conducted periodically, and programs are sustained or redirected as appropriate.

ARS RESOURCE SUMMARY

[Million dollars per year]

[The values in this table are approximate and not final]

ARS outcomes	Basic research	Applied research	Developmental research and technology transfer	Extension, outreach, and public information and education	Higher education	ARS total by outcome
Competitive agricultural system in the global economy	61.6	13.68	53.5	19.5	.....	148.28 (20.9%)
Safe and secure food and fiber system	128.8	21.72	95.14	.....	.....	245.66 (34.7%)
Healthy, well-nourished	48.6	1.76	15.3	.....	.....	65.66 (9.2%)
Agriculture's interface with the environment	53.3	11.06	54.22	.....	.....	118.58 16.7%)
Economic enhancement and quality of life	69.95	8.22	53.66	.....	.....	131.28 (18.5%)
Total by function	362.25 (51%)	56.44 (7.9%)	271.82 (38.3%)	[3]19.5 (2.8%)	[4]0	710.0 (100%)

Footnotes:

[1] All of the above budget values are based on FY 1996 appropriated dollars.

[2] Allocation of budget across functions and program outcomes is based on scientists' division of funds.

[3] $19.5 million constitutes the budget for the National Agricultural Library which supports work in all 5 outcomes.

[4] The financial and human resources needed to support the non-NAL public information activities are included in the basic, applied and developmental/technology transfer activities.

The following will appear on the inside back cover of the published plan.

The ARS Pledge to Customer Service

In addition to the customer focus in GPRA, the President's Executive Order 12862 Customer Service Standards mandated each agency to, among other things, ''identify the customers who are served by the agency'' and establish and ''post service standards and measure results against them.'' A work group developed the following customer service pledge, which applies to all ARS employees:

Our vision of customer service:

To practice the highest standards of integrity and ethical conduct.

To dedicate ourselves to quality and excellence.

To provide objective and factual information to our customers.

To value and treat each customer courteously.

To listen to our customers and strive to understand their needs.

To appreciate the diversity of our customers and respect their contributions.

To provide timely, complete, and understandable responses to customer requests.

To treat our coworkers as customers.

[FR Doc. 96–18462 Filed 7–17–96; 1:47 pm]

BILLING CODE 3410–03–M

federal register

Monday
July 22, 1996

Part IV

Department of the Interior

Fish and Wildlife Service

50 CFR Part 20

Migratory Bird Hunting; Proposed Frameworks for Early-Season Migratory Bird Hunting Regulations; Proposed Rule

DEPARTMENT OF THE INTERIOR

Fish and Wildlife Service

50 CFR Part 20

RIN 1018-AD69

Migratory Bird Hunting; Proposed Frameworks for Early-Season Migratory Bird Hunting Regulations

AGENCY: Fish and Wildlife Service, Interior.

ACTION: Proposed rule; Supplemental.

SUMMARY: The Fish and Wildlife Service (hereinafter the Service) is proposing to establish the 1996–97 early-season hunting regulations for certain migratory game birds. The Service annually prescribes frameworks, or outer limits, for dates and times when hunting may occur and the maximum number of birds that may be taken and possessed in early seasons. Early seasons generally open prior to October 1, and include seasons in Alaska, Hawaii, Puerto Rico, and the Virgin Islands. These frameworks are necessary to allow State selections of final seasons and limits and to allow recreational harvest at levels compatible with population status and habitat conditions. This supplement to the proposed rule also provides the Service's final regulatory alternatives for the 1996–97 duck hunting season.

DATES: The comment period for proposed early-season frameworks will end on August 1, 1996; and for late-season proposals on September 3, 1996. The Service will hold a public hearing on late-season regulations August 2, 1996, starting at 9 a.m.

ADDRESSES: The Service will hold a public hearing August 2 in the Department of the Interior's Auditorium, 1849 C Street, NW., Washington, DC. Parties should submit written comments on these proposals and/or a notice of intention to participate in the late-season hearing to the Chief, Office of Migratory Bird Management (MBMO), U.S. Fish and Wildlife Service, room 634—Arlington Square, Washington, DC 20240. The public may inspect comments during normal business hours in room 634, Arlington Square Building, 4401 N. Fairfax Drive, Arlington, Virginia.

FOR FURTHER INFORMATION CONTACT: Paul R. Schmidt, Chief, MBMO, U.S. Fish and Wildlife Service, (703) 358–1714.

SUPPLEMENTARY INFORMATION:

Regulations Schedule for 1996

On March 22, 1996, the Service published in the Federal Register (61 FR 11992) a proposal to amend 50 CFR part 20. The proposal dealt with the establishment of seasons, limits, and other regulations for migratory game birds under §§ 20.101 through 20.107, 20.109, and 20.110 of subpart K. On June 13, 1996, the Service published in the Federal Register (61 FR 30114) a second document providing supplemental proposals for early- and late-season migratory bird hunting regulations frameworks. The June 13 supplement also provided detailed information on the 1996–97 regulatory schedule and announced the Service Migratory Bird Regulations Committee and Flyway Council meetings. On June 14, 1996, the Service published in the Federal Register (61 FR 30490) a third document describing the Service's proposed 1996–97 regulatory alternatives for duck hunting and its intent to consider establishing a special youth waterfowl hunting day.

This document is the fourth in a series of proposed, supplemental, and final rulemaking documents for migratory bird hunting regulations and deals specifically with proposed frameworks for early-season regulations. It will lead to final frameworks from which States may select season dates, shooting hours, and daily bag and possession limits for the 1996–97 season. The Service has considered all pertinent comments received through July 8, 1996, in developing this document. In addition, new proposals for certain early-season regulations are provided for public comment. Comment periods are specified above under **DATES**. The Service will publish final regulatory frameworks for early seasons in the Federal Register on or about August 16, 1996.

This supplemental proposed rulemaking consolidates further changes in the original framework proposals published in the March 22 Federal Register. The regulations for early waterfowl hunting seasons proposed in this document are based on the most current information available about the status of waterfowl populations and habitat conditions on the breeding grounds.

Presentations at Public Hearing

Five Service employees presented reports on the status of various migratory bird species for which early hunting seasons are proposed. These reports are briefly reviewed below.

Dr. Jim Dubovsky, Waterfowl Specialist, presented information on 1996 habitat conditions for waterfowl, preliminary estimates of duck abundance, and harvests during the 1995 September teal seasons. Most of the midcontinent region experienced unusually cool temperatures during May and early June. Spring conditions were delayed approximately 2–3 weeks throughout most of the region. In the northcentral United States, southern Saskatchewan, and southern Manitoba, habitat conditions for nesting ducks were good to excellent. Abundant water existed in natural and artificial basins, and land managed in conservation easements in the United States continued to provide good nesting cover. Southern Alberta had improved wetland conditions relative to recent years, but nesting cover was limited because grazing reduced the amount of residual vegetation, and cool temperatures slowed growth of grasses. The pond estimate for the northcentral United States and prairie Canada combined was 7.5 million. This estimate was the second highest recorded, and was 61 percent above the long-term average. Farther north in the prairie provinces and in the Northwest Territories, habitat conditions were much improved from last spring, when habitats were extremely dry and forest fires were common. This year, most areas had abundant water. Conditions in Alaska and in survey areas throughout eastern portions of the United States and Canada also were favorable for nesting waterfowl. Estimates of duck abundance for most species during spring 1996 generally were similar to those of last year. Blue-winged teal and northern shoveler increased in abundance. American wigeon numbers decreased. The 1995 May breeding population survey yielded an estimate of 6.4 million blue-winged teal, which was greater than the 1995 estimate of 5.1 million and 53 percent above the long-term average. The estimated harvest of blue-winged teal during the 1995 September teal season was approximately 370,000 birds, which was about 100,000 birds more than the 1994 teal-season harvest. However, the 1995 estimate was within the range of harvests experienced historically. Band-recovery rates of blue-winged teal suggested that 1995–96 harvest rates were similar to or lower than those during the 1970's and early 1980's.

Dr. David Caithamer, Wildlife Biologist, reviewed the status of several populations of Canada geese for which the Service is proposing September seasons. In Alaska five subspecies of Canada geese are hunted including Dusky Canada geese and Cackling Canada geese. Numbers of Dusky Canada geese, which nest primarily in the Copper River Delta of Alaska, have declined steadily since an earthquake in 1964 altered their nesting habitat and

resulted in lowered recruitment rates. The January 1995 population index revealed approximately 8,500 geese. Unfortunately, no survey was conducted in January 1996 due to the furlough of federal employees and inclement weather. However, preliminary results from a spring survey of Dusky geese on the Copper River Delta suggest that the size of the breeding population is similar to the record-low size observed last spring. The Service remains concerned about the continued poor status of this population. The December 1995 survey of Cackling Canada geese revealed approximately 161,000 geese, which was about 6 percent higher than 1994 index. This population has grown approximately 14 percent per year since 1986. The 3 other subspecies of Canada geese hunted in Alaska are thought to be at or above objective levels. In the Pacific Flyway, the Rocky Mountain Population of Canada geese increased 18 percent from 1995 to 109,000 geese. The population of Mississippi Flyway giant Canada geese has increased at a rate of about 5 percent per year during the last 10 years. In some areas, numbers of giant geese have increased to record-high and nuisance levels. The situation is similar in the northeastern U.S., where the ''resident'' goose population has approximately doubled since 1989 to nearly 800,000 birds. The Service is concerned about the rapid growth rate and large sizes of resident Canada goose populations in parts of the Atlantic and Mississippi Flyways. In some regions, the management of these large populations of resident geese is confounded by the presence of other populations, which are below population objectives. A case in point is the migratory population of Atlantic Canada geese which nests in northern Quebec and winters in the Atlantic Flyway. The number of breeding pairs of Atlantic Canada geese has declined from 118,000 in 1988 to only 29,000 in 1995. The Service recognizes the challenge facing management agencies which are striving to increase migrant populations, while simultaneously attempting to decrease resident populations.

Mr. David Sharp, Central Flyway Representative, reported on the status and harvests of sandhill cranes. The Mid-Continent Population appears to have stabilized following dramatic increases in the early 1980s. The Central Platte River Valley 1996 preliminary spring index, uncorrected for visibility, was 315,200. This index is 15 percent higher than 1995's index of 273,376. However, the photo-corrected 3-year average for the 1993–95 period was 394,093, which was 6 percent below the previous year's 3-year running average and within the established population-objective range of 343,000–465,000 cranes. All Central Flyway States, except Nebraska, elected to allow crane hunting in portions of their respective States in 1995–96; about 20,200 Federal permits were issued and approximately 7,400 permittees hunted one or more times. The number of permittees and active hunters were similar to the previous year's seasons. About 20,777 cranes were harvested in 1995–96, a 20 percent increase from the previous year's estimate. Harvest from Alaska, Canada and Mexico are estimated to be less than 10,000 for 1995–96 sport-hunting seasons. The total North American sport harvest was estimated to be about 34,773, which is an all time record high level. Annual surveys of the Rocky Mountain Population, which migrates through the San Luis Valley of Colorado in March, suggest a relatively stable population since 1984. The 1996 index of 20,500 cranes was within the established objective range of 18,000–22,000. Limited special seasons were held during 1995 in portions of Arizona, Montana, New Mexico, Utah, and Wyoming, and resulted in an estimated harvest of 378 cranes.

Dr. John Bruggink, Eastern Shore and Upland Game Bird Specialist, reported on the 1996 status of the American woodcock. The 1995 recruitment index for the Eastern Region (1.2 immatures per adult female) was 29 percent below the long-term regional average; the recruitment index for the Central Region (1.4 immatures per adult female) was 18 percent below the long-term regional average. Singing-ground Survey data indicated that the number of displaying woodcock decreased ($P<0.01$) between 1995 and 1996 in the Eastern and Central regions (-20.2 and -11.5 percent, respectively). Trends from the Singing-ground Survey during 1986–96 also were negative (-3.2 and -3.7 percent per year for the Eastern and Central regions, respectively) ($P<0.01$). There were long-term (1968–96) declines ($P<0.01$) of 2.5 percent per year in the Eastern Region and 1.6 percent per year in the Central Region.

Mr. David Dolton, Western Shore and Upland Game Bird Specialist, presented the mourning dove population status. The report summarized call-count information gathered over the past 31 years. Trends were calculated for the most recent 2 and 10-year intervals and for the entire 31-year period. Between 1995 and 1996, the average number of doves heard per route declined significantly in all three management units. In the Eastern Management Unit (EMU), a significant decline in doves heard was found over the most recent 10 years, but no trend was indicated over 31 years. The Central Management Unit (CMU) showed significant declines for both the 10 and 31-year time frames. In the Western Management Unit (WMU), no trend was evident over the most recent 10 years, but there has been a significant decline over 31 years. Trends for doves seen at the unit level over the 10 and 31-year periods agreed with trends for doves heard in the WMU. No trend was found in doves seen over 10 years in the EMU and for 31 years in the CMU. Trends for doves seen in other time periods were comparable to those in doves heard.

Mr. Dolton also presented the status of western white-winged doves in Arizona. Since the 1980's, whitewing populations have remained relatively stable. The 1996 whitewing call-count index of 31.1 doves heard per route was essentially the same as the index of 31.2 doves heard per route in 1995. Since 1987, hunters have harvested around 100,000 birds annually. In 1995, an estimated 107,000 birds were harvested, a 22 percent decrease from 1994.

Mr. Dolton then reported on the status of eastern white-winged doves and white-tipped doves in Texas. Results of the 1996 whitewing call-count survey indicate 391,000 birds were nesting in the Lower Rio Grande Valley counties of Starr, Hidalgo, Cameron, and Willacy. This is an 11 percent decrease from 1995, but 6 percent below the previous 6-year average count (1990–95). This decline may be due to a drought in the Lower Rio Grande Valley since December 1994 which may be affecting available native and domestic feed and nesting habitat. In Upper South Texas, an estimated 620,000 whitewings were nesting throughout a 19-county area. This was essentially the same count as last year. West Texas also supports a small population of whitewings. The 1996 estimate of 18,750 birds was 19 percent above the 1995 estimate. For white-tipped doves, an average of 0.47 birds were heard per stop in both brush and citrus locations in 1996.

Last, Mr. Dolton presented population and harvest information on band-tailed pigeons. Band-tailed pigeons are managed as two separate populations: the Coastal Population (Washington, Oregon, California, and Nevada) and the Four-corners or Interior Population (Utah, Colorado, Arizona, and New Mexico). For the Coastal population, the Breeding Bird Survey (BBS) indicates a significant decline between 1968 and 1995. Mineral site counts conducted in Oregon in 1995 showed a 23 percent decrease in pigeon use over 1994.

Washington's call-count showed essentially no change in the population between 1994 and 1995. Between 1975 and 1995 there was no significant trend found in the population, but a significant increase was noted during the most recent 5-year period between 1991 and 1995. Two indirect population estimates suggest that the population was between 2.4 and 3.1 million birds in 1992. With continuing restrictions on bag limits and season length, the 1995 harvest was an estimated 2,074 pigeons in Oregon and 10,428 in California. Washington has had a closed season since 1991. In the Four-corners area, BBS data showed a stable population between 1968 and 1995. The 1995 combined harvest for all four States was 1,518 birds; well below the harvest in earlier years which ranged up to 6,000 birds.

Comments Received at Public Hearing

Mr. Dale Bartlett, representing the Humane Society of the United States (HSUS), expressed concern that the Service continues to establish liberal hunting regulations on species without adequate data. HSUS believes that sea duck seasons should be closed or severely restricted until adequate data on population status and species biology are available. HSUS claims that the Service acted too quickly to liberalize duck hunting regulations since the populations of many species remain below goals set by the North American Waterfowl Management Plan (NAWMP). HSUS is frustrated with the failure of the Service to close seasons on species in decline such as woodcock, coastal populations of band-tailed pigeon, white-winged doves in Arizona, and mourning doves in the Western Management Unit. HSUS believes that bag limits and season lengths on several species of webless migratory birds are ridiculously high and fly in the face of the principles of wise and ethical use of the resource. They strongly recommend that opening dates in Alaska be delayed at least 2 weeks to allow birds to leave their natal marshes. They also recommend that the Service require all seasons to open at noon during mid-week to reduce large kills. They further urged the Service to disallow one-half hour before sunrise shooting. Finally, they expressed concern about the general direction of the Service towards resident Canada goose management.

Mr. Don Kraege, representing the Pacific Flyway Council, expressed appreciation for the Service's efforts to enhance cooperative waterfowl management. He stated that the Flyway generally supports the idea of limiting zone/split configurations for duck hunting. However, he requested the Service reconsider the Council's recommendation on splits and zones for duck seasons. Specifically, he recommended removal of the requirement that duck seasons in different zones differ by at least one day. He suggested that this change would lead to regulatory simplification, increased hunter satisfaction, enhance waterfowl habitat efforts on private lands, and would not significantly alter harvest.

Mr. Joe Kramer, representing the Central Flyway Council, reviewed recommendations passed by the Council regarding establishment of this year's migratory bird hunting regulations. He supported the proposed expansion of the Rocky Mountain Greater Sandhill Crane hunt area in Wyoming. Reviewing status information on blue- and green-winged teal populations, he indicated that this year's combined spring-breeding population of about 8.9 million was a record high level and that the projected fall flight will probably be the largest ever recorded. He indicated that the Central and Mississippi Flyway Councils would complete a more comprehensive harvest approach for these special seasons by March 1997. He supported the Central Flyway Council's recommendation to expand this year's teal bag limit from 4 to 5 and increase the teal season length from 9 to 16 days. He also reaffirmed the Council's strong support for the Adaptive Harvest Management process, but recommended an increase in season length from 60 to 67 days under the ''liberal'' alternative. He supported the recommended change in the redhead daily bag limit from 1 to 2 in the ''liberal'' alternative for the Central and Mississippi Flyways.

With respect to the zone/split criteria for the establishment of duck hunting seasons, Mr. Kramer reiterated the Central Flyway's objection to constraints on the use of additional days in the High Plains Mallard Management Unit. Mr. Kramer supported efforts by the Service to review baiting regulations, but he pointed out continuing desires by many Central Flyway States to review the timing of the early- and late-season meetings. Finally, Mr. Kramer supported the additional flexibility allowed to address resident goose problems through special hunting seasons, and the concept of establishing a youth waterfowl hunt.

Mr. Charles D. Kelley, representing the Southeastern Association of Fish and Wildlife Agencies, commended the Service for its efforts in developing the Harvest Information Program, which will provide improved harvest estimates for a number of species. He also stated that he appreciated the Service's recognition of the problems caused by rapidly-expanding populations of giant Canada geese and the need to work toward solving them.

Ms. Anne Muller, representing the Committee to Abolish Sport Hunting, and its affiliate, the Coalition to Prevent the Destruction of Canada Geese, commented that State and Federal wildlife agencies are exploiting wild Canada geese to supply hunters with targets by increasing resident goose populations on wildlife management areas in every State. She claimed that this is done in order to collect excise taxes on lethal weapons and ammunition. Further, she objected to the roundup and shipment of geese by game agencies personnel to slaughter houses to feed the poor, and believed this action violates the rights of the general citizenry. Ms. Muller asked that the Service change the current depredation permitting process. Finally, she requested that public hearings be held during evening hours to increase pubic attendance and that the Service directly involve communities to help resolve nuisance Canada geese conflicts.

Mr. Peter Muller, representing the Committee to Abolish Sport Hunting, expressed concern that the special Canada goose seasons currently held in New York and New Jersey were responsible for the decline of migrant geese nesting in northern Quebec. He questioned whether the criteria allowing 10 and 20 percent harvest of migrant geese during the special early and late seasons, respectively, were too liberal. Further, he argued that statistics regarding this goose population were highly dubious since very little banding had occurred on the breeding ground to accurately determine the racial composition of the harvest. He indicated that little is known regarding the interactions between resident and migrant geese and recommended suspension of these seasons until more information regarding population affiliation was available. To assess the beneficial effects of these liberal hunting seasons on resident Canada geese, he asked that the Service develop an Environmental Impact Statement (EIS). He requested that the Service maintain and enforce strict waterfowl baiting regulations. Finally, he was disturbed by the trend of State and Federal management agencies of shifting to more liberal policies.

Dr. Ann Stirling Frisch expressed opposition to a proposed new hunt area for special early Canada goose seasons in Wisconsin. Dr. Frisch suggested such seasons are ineffective at controlling

local Canada goose populations, that habitat management was a preferable alternative to hunting seasons, that other lethal means of control were undesirable. She further stated that National Environmental Policy Act (NEPA) requirements were not met in establishing such seasons.

Written Comments Received

The preliminary proposed rulemaking, which appeared in the March 22 Federal Register, opened the public comment period for migratory game bird hunting regulations. As of July 8, 1996, the Service had received 82 comments; 18 of these specifically addressed early-season issues and 9 addressed the proposed regulatory alternatives for duck hunting. Early-season comments are summarized below and numbered in the order used in the March 22 Federal Register. Only the numbered items pertaining to early seasons for which written comments were received are included. The Service received recommendations from all four Flyway Councils. Some recommendations supported continuation of last year's frameworks. Due to the comprehensive nature of the annual review of the frameworks performed by the Councils, support for continuation of last year's frameworks is assumed for items for which no recommendations were received. Council recommendations for changes in the frameworks are summarized below.

1. Ducks

The categories used to discuss issues related to duck harvest management are as follows: (A) General Harvest Strategy, (B) Framework Dates, (C) Season Length, (D) Closed Seasons, (E) Bag Limits, (F) Zones and Split Seasons, and (G) Special Seasons/Species Management. Only those categories containing substantial recommendations are included below.

A. Harvest Strategy Considerations

In the March 22, 1996, Federal Register, the Service described the underlying principles of Adaptive Harvest Management (AHM) and the progress made on its implementation in 1995. In addition, the Service reported recommendations made by an AHM technical working group for the 1996–97 regulatory process. Comprised of representatives from the Service and the four Flyway Councils, the working group was established in 1992 to develop technical recommendations for improving duck harvest regulations.

One of the recommendations of the AHM working group for the 1996–97 regulatory process was to continue the regulatory alternatives used in 1995, with a minor exception in the Pacific Flyway. In 1995, the Service limited the choice of regulatory alternatives for the 1995–96 regular duck hunting season to three sets of frameworks similar to those in effect during the 1979–93 hunting seasons. These three sets of frameworks were described in a relative sense as restrictive, moderate, and liberal. In general, specific guidelines for selection of one of the regulatory alternatives are based on the size of the mallard breeding population and habitat conditions.

Council Recommendations: In the June 13, 1996, Federal Register, the Service reported that all four Flyways continued to express support for the AHM approach. The Mississippi, Central, and Pacific Flyway Councils recommended some specific modifications to the regulatory alternatives recommended by the working group and these recommendations were identified in the June 13, 1996, document and are reiterated here and under ''Framework Dates,'' ''Season Length,'' ''Bag Limits,'' and ''Special Seasons/Species Management.''

The Atlantic Flyway Council endorsed the AHM technical working group's recommendations regarding harvest-management objectives, use of mid-continent mallard population models, and regulatory options for the Atlantic Flyway in 1996.

The Upper-Region Regulations Committee of the Mississippi Flyway Council expressed support for no more than three regulations packages, but recommended a harvest-management objective (objective function) that achieves an equal balance between harvest and a breeding population objective of 8.1 million mallards.

The Lower-Region Regulations Committee of the Mississippi Flyway Council requested the working group investigate the addition of both a more conservative and a more liberal regulatory package to the group of regulations packages offered for the 1997–98 hunting season.

The Central Flyway Council supported the working group's recommendation to modify the objective function so that it continue to reflect the broad resource values of the population goals of the NAWMP, but commented that many technical issues need to be resolved before AHM's fully operational for multiple duck stocks.

The Pacific Flyway Council endorsed the AHM working group's 1996 duck regulations approach and, with the exception of a harvest strategy for pintails, recommendations for 1996.

Public-Hearing Comments: Mr. Joe Kramer, Chairman of the Central Flyway Council, expressed continued support for AHM. However, he questioned the Service's proposal to largely maintain the interim regulatory alternatives from last year.

Mr. Don Kraege, Chairman of the Pacific Flyway Council Study Committee, expressed support for the cooperative development of AHM as a means to improve the scientific management of mallards and other species.

Written Comments: The Texas Parks and Wildlife Department supports the concept of AHM, but feels that minor changes to regulatory alternatives should not be precluded because full implementation of AHM may take several years.

The Missouri Department of Conservation applauded the Service for continued progress on AHM and supports: (1) the use of NAWMP population goals; (2) regulatory alternatives that are similar to those of 1995; (3) continued use of current hypotheses concerning harvest and reproduction; and (4) AHM development for other populations or species. Missouri also noted the important role of communication in ensuring long-term support for AHM and urged that data-collection efforts be maintained in the face of changing budgets and priorities. In a second letter, the Missouri expressed continued support for AHM, including the proposed regulatory alternatives. Missouri also urged continued progress on a broader range of regulatory alternatives and inclusion of other duck species in the AHM strategy.

The Minnesota Department of Natural Resources supports the three regulatory alternatives as outlined in the June 14 Supplement. Minnesota also supports finalization of the regulatory alternatives prior to the July Flyway meetings and wishes to pursue cooperative development of regulatory alternatives that will be appropriate over the long-term for the Mississippi Flyway.

The Illinois Department of Natural Resources encouraged the Service to examine the pros and cons of four or five regulatory alternatives, rather than three. Illinois believes that the addition of a more restrictive and/or a more liberal alternative could provide greater flexibility in responding to changing population status, but may be undesirable if they lead to greater annual fluctuations in hunting regulations.

The Kansas Department of Wildlife and Parks has supported the principles of AHM, but is concerned that the process now is being used to circumvent the traditional process of allowing input of the States through the Flyway Councils. Kansas objects to the AHM technical working group establishing regulations by ''popular vote'' among individuals from all four Flyways, employees of the Service's MBMO, and their academic associates. Kansas is also concerned that the regulatory alternatives used in 1995 and proposed for 1996 are becoming entrenched and that future changes will be increasingly difficult.

Service Response: The Service appreciates the continued support of the Flyway Councils and States for implementation of AHM. Agreement on a limited number of regulatory alternatives, on the role of NAWMP population goals in guiding harvest management, and on alternative hypotheses of mallard population dynamics has greatly reduced the annual debate over appropriate duck-hunting regulations. More importantly, these elements constitute key components of a systematic process to increase knowledge of regulatory effects and, thus, improve long-term management performance. The Service also recognizes, however, that continued progress in AHM will demand deliberate and methodical attention to a number of previously ignored or unresolved issues in waterfowl management. These include: (1) hunter dynamics and how regulations affect hunter activity and success; (2) factors affecting duck reproduction on a continental scale; (3) relative costs and benefits of species, population, and sex-specific management; and (4) allocation of harvest opportunities among countries, Flyways, and States. Continued progress also will depend heavily on further education and communication, particularly as it concerns field biologists, wildlife-area managers, and other resource-agency staff. The Service is urging its partners to cooperatively address these technical and communication issues in a comprehensive and coherent manner. The Service recognizes that schedules for clarifying issues, receiving Flyway Councils and others input, and conducting necessary assessments must be developed so that expectations for progress are realistic. The Service believes that AHM implementation must itself be adaptive and that there will be a continuing need for periodic review of all technical specifications, including management objectives, regulatory alternatives, and theories (or models) of population dynamics.

The limited set of regulatory alternatives (i.e., ''restrictive'', ''moderate'', and ''liberal'') continues to draw criticism from some Flyway Councils and States. At issue is both the number of regulatory alternatives and the specific combination of season length and bag limits for each alternative. The Service recognizes that the proposed alternatives do not satisfy all partners and will continue to treat these alternatives as interim, pending further investigation by the AHM technical working group and others. However, the Service believes that adjustments to the set of regulatory alternatives should be based on the following criteria: (1) alternatives should differ sufficiently so that differences in harvest levels and their impacts on duck populations can be detected with current monitoring programs; (2) the set of alternatives should produce enough variation in harvest rates to permit identification of optimal harvest strategies; and (3) regulatory alternatives should reflect the needs of law enforcement and the desires and abilities of hunters. The set of alternatives can be reduced or expanded as needed, but it is important to use the alternatives long enough to identify patterns in harvest rates under each alternative. Because relevant issues have not yet been addressed adequately, the Service is denying requests this year to modify the basic structure of regulatory alternatives. Prior to the 1997–98 hunting season, the Service will work with the Flyway Councils and the AHM technical working group to investigate the merits of major modifications to the set of regulatory alternatives.

The role of the AHM working group is to provide technical guidance to decision-makers. This working group is comprised of two representatives appointed by each Flyway Council, in addition to biological staff from the Service and the National Biological Service. The Flyway Councils' appointees effectively represent the perspectives of their respective Flyways, but they must be concerned also with continental issues that cross Flyway boundaries. The Service believes that this arrangement works exceedingly well and that individual States have ample opportunity to comment on recommendations offered by the AHM working group, either through their Flyway Councils or directly to the Service. The Service emphasizes that the working group does not establish regulations. Moreover, the working group develops its recommendations through consensus, and does not use a voting process.

For the 1996–97 regular duck hunting season, the Service will use the three regulatory alternatives detailed in the accompanying table (at the end of this document). Alternatives are specified for each Flyway and are designated as ''RES'' for the restrictive, ''MOD'' for the moderate, and ''LIB'' for the liberal alternative. The Service will propose a specific regulatory alternative when survey data on waterfowl population and habitat status are available in late July.

B. Framework Dates

Council Recommendations: The Lower-Region Regulations Committee of the Mississippi Flyway Council recommended the AHM technical working group investigate the impacts of a January 31 framework closing date.

Service Response: The Service supports investigations by the AHM technical working group to assess the suitability of all aspects of the current regulatory alternatives, including framework dates. However, the Service reiterates its long-standing concerns that hunting disturbance in late winter may interfere with pair bonding and inhibit nutrient acquisition and storage with subsequent impacts to reproductive potential. Before the Service can consider changes to the timing of the framework closing date, additional information to alleviate these concerns is necessary.

The Service notes that the framework dates in the proposed regulatory alternatives for the Atlantic Flyway published in the June 14 Supplement did not accurately reflect the policy established by the Service last year (September 27, 1995, Federal Register 60 FR 50042). This discrepancy was unintentional. The Service reaffirms its policy of fixed dates of October 1 to January 20 for the Atlantic Flyway, and of floating framework dates (Saturday closest to October 1, Sunday closest to January 20) for the Mississippi, Central, and Pacific Flyways. The appropriate change in framework dates for the Atlantic Flyway is reflected in the final regulatory alternatives.

C. Season Length

Council Recommendations: In the regulatory alternatives recommended for 1996–97, the Upper- and Lower-Region Regulations Committees of the Mississippi Flyway Council recommended the season length in the ''liberal'' package be 51 days instead of 50 days. The Central Flyway Council

recommended the season length in the ''liberal'' package be 67 days.

Public-Hearing Comments: Mr. Joe Kramer, Chairman of the Central Flyway Council, urged the Service to adopt the Council's proposal to increase the season length from 60 to 67 days in the ''liberal'' alternative.

Written Comments: The Texas Parks and Wildlife Department also urged a change from 60 to 67 days in the ''liberal'' alternative for the Central Flyway.

The Kansas Department of Wildlife and Parks also recommended that the ''liberal'' alternative for the Central Flyway provide 67 days of duck hunting. Kansas believes that they are ''locked into'' an unnecessarily restrictive regulation without any recourse for addressing the problem.

The Wyoming Game and Fish Department supports extending the season from 60 to 67 days under the ''liberal'' alternative for the Central Flyway. Wyoming feels that the current regulatory options will be used for an indefinite number of years and that postponing an appropriate correction to season length is unacceptable.

The Minnesota Department of Natural Resources supports the Mississippi Flyway Council proposal to increase the season length in the ''liberal'' alternative by one day.

The Illinois Department of Natural Resources also supports the Mississippi Flyway Council proposal to increase the ''liberal'' alternative season length by one day. Illinois believed this minor change would provide additional weekend hunting opportunity without adverse impact.

Service Response: The Service believes that any modifications to season length under the three regulatory alternatives must be approached carefully, with due consideration to differences among Flyways. Current differences in season length among the Flyways are predicated on historic (ca. 1950) patterns of duck abundance and hunter activity, with longer seasons available to Flyways with relatively more ducks and fewer hunters. The Service believes that a thorough review of Flyway differences in season lengths is needed and is seeking technical guidance from the Flyway Councils, the AHM working group, and others. Current differences in hunter activity and duck abundance, as well as the origin and status of duck stocks contributing to each Flyway, should be investigated using modern data and analytical techniques. Until such analyses are available, the Service is concerned that changes in season lengths contained in the regulatory alternatives could alter the allocation of harvest in unpredictable, undesirable or inappropriate ways. Therefore, the Service prefers to approach all proposed changes to season length, regardless of the number of days involved, in a systematic and comprehensive manner.

E. Bag Limits

Council Recommendations: The Upper- and Lower-Region Regulations Committees of the Mississippi Flyway Council and the Central Flyway Council recommended the redhead daily bag limit in the ''liberal'' package be 2 birds instead of 1.

The Lower-Region Regulations Committee of the Mississippi Flyway Council also recommended the overall daily bag limit in the ''liberal'' package be 6 birds instead of 5, and within this overall limit, the daily bag limit for mottled ducks be 4 instead of 3; and the limit for ringnecks, scaup, goldeneyes, and buffleheads be 4 instead of 5. Limits for black ducks, pintails, wood ducks, and canvasbacks would be the same as in 1995.

Public-Hearing Comments: Mr. Joe Kramer, Chairman of the Central Flyway Council, expressed support for the Service's proposal to increase the redhead limit from 1 to 2 under the ''liberal'' alternative.

The Minnesota Department of Natural Resources also supports the Service's proposal to allow a second redhead in the daily bag under the Central and Mississippi Flyways ''liberal'' alternative.

Written Comments: The Massachusetts Division of Fisheries and Wildlife recommended any ''liberal'' regulatory package delete the hen mallard restriction in the Atlantic Flyway.

The Michigan Department of Natural Resources supports the Service's proposal to allow a second redhead in the daily bag under the ''liberal'' alternative for the Central and Mississippi Flyways. Michigan also requested the rationale for allowing an additional duck in the daily bag limit of the ''liberal'' alternative for the Pacific Flyway.

Service Response: The Service concurs with the recommendations to increase the bag limit of redheads from 1 to 2 in the ''liberal'' alternative of the Central and Mississippi Flyways. However, the Service cannot support the proposal of the Lower-Region Regulations Committee of the Mississippi Flyway Council to increase the overall bag limit in the ''liberal'' alternative from 5 to 6 in order to provide additional hunting opportunity on several abundant species. The Service believes that major changes to the regulatory alternatives should be addressed in a deliberate and comprehensive manner. Historic efforts at species-specific management have been predicated largely on the assumptions that: (a) mallard harvest rates can be used as a standard by which to judge the appropriateness of harvest rates for other species; (b) target stocks of ducks can be isolated in time or space, or that hunters can shoot selectively; and (c) that management costs are largely fixed whether managing one stock or many. Recent information has led the Service to question the validity of these assumptions. The Service believes that a number of issues must be addressed prior to major reforms in species-specific harvest strategies: (1) how much must species or populations differ in terms of their population dynamics to warrant differential harvest regulations? (2) what are the relative costs and benefits of managing individual duck stocks? (3) what is the ability of hunters to harvest selectively? and (4) do hunters prefer the maximum hunting opportunity afforded by complex regulations or simpler hunting regulations that offer less hunting opportunity? The Service awaits further guidance from the Councils and the AHM technical working group before considering significant changes to species-specific bag limits.

The Service acknowledges that liberal hunting regulations in the Atlantic Flyway historically had no sex-specific conventional bag limits for mallards (although there were hen restrictions for States using the point system). However, the Service believes that it is premature to remove hen restrictions that have been in effect in the Atlantic Flyway since 1985. The role of sex-specific bag limits in regulating mallard harvest, total mortality, and recruitment is uncertain. Further investigation of the potential consequences of eliminating hen restrictions on mallards is necessary before considering fundamental changes in sex-specific bag limits of mallards. The Service also urges the Atlantic Flyway Council to begin development of a harvest-management objective for mallards breeding in eastern North America so that the implications of changes in hen bag limits can be assessed.

The Service is allowing a 7-duck daily bag limit in the Pacific Flyway ''liberal'' alternative, representing a 1-duck increase compared to the 1995 ''liberal'' alternative. The Service agreed to this change because the Pacific Flyway had a 7-duck bag limit during the 1979–84 period, which provided the basis for

season lengths and bag limits under the current ''liberal'' alternative. Mallard harvest rates realized with a 7-duck daily bag limit in the Pacific Flyway are accounted for within the AHM framework and are consistent with current resource status.

Regarding the final regulatory alternatives, the Service notes that the daily bag limit for redheads in the Pacific Flyway's overall daily bag limit was inadvertently omitted from the proposed regulatory alternatives in the June 14, 1996, Federal Register. Consistent with the Pacific Flyway frameworks established last year (September 27, 1995, Federal Register), a daily bag limit of 2 redheads is reflected in the final regulatory alternatives.

F. Zones and Split Seasons

In 1990, the Service established guidelines for the use of zones and split seasons for duck hunting (Federal Register 55 FR 38901). These guidelines were based upon a cooperative review and evaluation of the historical use of zone/split options. The Service reiterated 1977 criteria that the primary purpose of these options would be to provide more equitable distribution of harvest opportunity for hunters throughout a State. In 1977, the Service had also stated that these regulations should not substantially change the pattern of harvest distribution among States within a Flyway, nor should these options detrimentally change the harvest distribution pattern among species or populations at either the State or Flyway level. The 1990 review did not show that the proliferation of these options had increased harvest pressure; however, the ability to detect the impact of zone/split configurations was poor because of poorly chosen response variables, the lack of statistical tests to differentiate between real and perceived changes, and the absence of adequate experimental controls. Therefore, the 1990 strategy intended to provide a framework for controlling the proliferation of changes in zone/split options and limited changes to 5-year intervals. The first open season for changes was in 1991 and the second occurs this year when zone/split configurations will be established for the 1996–2000 period.

Council Recommendations: The Flyway Councils made several recommendations on the Service's proposed guidelines on the use of zones and split seasons for duck hunting. The Service published these guidelines in the March 22, 1996, Federal Register.

The Central Flyway Council recommended non-contiguous zones be allowed when supported by adequate justification. The Council also made several recommendations regarding the use of additional days in the High Plains Management Unit. The Council recommended the restrictions ''must be consecutive'' and ''after the regular duck season'' be removed from the proposed guidelines. Further, the Council recommended additional days in the management unit be restricted to one split (i.e., 2 segments).

The Pacific Flyway Council recommended the guidelines for zones allow identical season dates and/or different zoning configurations with different regulatory packages.

Regarding Flyway Council recommendation for specific changes requested by States, the Atlantic Flyway Council recommended the State of Maine be granted a waiver for its proposed zoning option for 1996–2000. The Upper-Region Regulations Committee of the Mississippi Flyway Council recommended the Service approve changes to zone-boundary configurations proposed by Illinois, Indiana, Michigan, and Wisconsin for the 1996–2000 period. The Central Flyway Council recommended the Service approve Nebraska's duck hunting zone proposal. The Pacific Flyway Council recommended the Service approve duck zone changes in Arizona, Nevada, Oregon, and Utah for the 1996–2000 period.

Written Comments: The Nebraska Game and Parks Commission and the Kansas Department of Wildlife and Parks recommended the restrictions ''must be consecutive'' and ''after the regular duck season'' be removed from the proposed guidelines on the use of additional days in the High Plains Management Unit. Both noted these requirements were new and seemed unnecessary.

Nebraska also recommended the addition of a provision allowing the use of non-contiguous zones when supported by strong justification. The Wyoming Game and Fish Department also requested a variance from the contiguous-boundary criterion, stating that the current zoning guidelines do not seem to contain the flexibility needed to address the considerable variation in hunting opportunity associated with the diverse physiographic regions found in many Rocky Mountain States.

Service Response: For the 1996 open season, the Service proposed in the March 22, 1996, Federal Register use of the existing 1990 guidelines, with an exception for the handling of special management units. The Service proposed to delete the following from the 1990 guidelines:

Special Management Unit Limitation: Within existing Flyway boundaries, States may not zone and/or use a 3-way split season simultaneously within a special management unit and the remainder of the State.

The Service proposed this change with the understanding that the additional days allowed for a management unit must be consecutive and, for the Central Flyway, be held both after the Saturday nearest December 10 and after the regular duck season. In the June 13, 1996, Federal Register, the Service proposed an additional special provision for management units: For the States that have a recognized management unit and include a non-management unit portion, an independent 2-way split season with no zones can be selected for the management unit. The remainder of the State in the non-management unit portion can be zoned/split according to established guidelines.

Regarding the Central Flyway Council recommendation that the criteria ''must be consecutive'' and ''after the regular duck season'' be removed from the guidelines on the use of additional High Plains Management Unit days, the Service stated in the June 13 Federal Register that the restrictions regarding the use of additional days should remain as proposed.

Regarding Flyway Council recommendations to alter the definition and interpretation of a ''zone'' that would allow the establishment of hunting areas with non-contiguous boundaries or concurrent seasons, the Service stated in the June 13 Federal Register that it believes the definition/interpretations previously used are still appropriate. However, after further review, the Service now believes that the requirement for different season dates among zones can be removed without detriment to the objectives of the guidelines for use of zones/split seasons for duck hunting. This change will allow States additional flexibility in addressing differences in physiography, climate, etc. within a State.

The following zone/split-season guidelines apply only for the *regular* duck season:

1. A zone is a geographic area or portion of a State, with a contiguous boundary, for which independent dates may be selected for the regular duck season.

2. Consideration of changes for management-unit boundaries are not subject to the guidelines and provisions governing the use of zones and split seasons for ducks.

3. Only minor (less than a county in size) boundary changes will be allowed for any grandfather arrangement, and changes are limited to the open season.

4. Once a zone/split option is selected during an open season, it must remain in place for the following 5 years.

For the 1996–2000 period, any State may continue the configuration used in 1991–1995. If changes are made, the zone/split-season configuration must conform to one of the following options:

1. Three zones with no splits,

2. Split seasons (no more than 3 segments) with no zones, or

3. Two zones with the option for 2-way split seasons in one or both zones.

At the end of 5 years after any changes in splits or zones, States will be required to provide the Service with a review of pertinent data (e.g., estimates of harvest, hunter numbers, hunter success, etc.). This review does not have to be the result of a rigorous experimental design, but nonetheless should assist the Service in ascertaining whether major undesirable changes in harvest or hunter activity occurred as a result of split and zone regulations. The next open season for changes in zone/split configurations will be 2001.

Using the above revised guidelines, the Service reviewed specific proposals for zoning changes submitted to date, including those recommended by the Flyway Councils and those proposed by the various States. Proposals by the States of Arizona, Illinois, Kentucky, Maine (boundary change), Michigan, Mississippi, Montana, Nebraska (Low Plains Zone boundary changes), Nevada, Oregon, South Dakota, Utah, Wisconsin, and Wyoming were within the established guidelines and are approved for the 1996–2000 period. Proposals by the States of Indiana, Kansas, Maine (creation of third zone), and Nebraska (creation of new zone) did not comply with the revised guidelines and the Service requests these States revise their proposals accordingly.

G. Special Seasons/Species Management

i. Canvasbacks

Council Recommendations: The Lower-Region Regulations Committee of the Mississippi Flyway Council recommended canvasback regulations fluctuate within the regulations packages commensurate with model predictions, breeding-population indices, and habitat conditions.

Public-Hearing Comments: Mr. Joe Kramer, Chairman of the Central Flyway Council, expressed support for the Service's canvasback harvest strategy.

Written Comments: The Texas Parks and Wildlife Department asked the Service to consider an additional canvasback in the daily bag if the resulting harvest would not exceed that provided under current modeling procedures.

Service Response: The Service implemented an interim harvest-management strategy for canvasbacks in 1994. The Service allows one canvasback in the daily bag in all four Flyways as long as the harvest is not expected to exceed the ''harvestable surplus.'' This surplus is the number of canvasbacks that could be taken by hunters while maintaining a subsequent breeding population of at least 500,000. Calculation of the harvestable surplus is based on breeding population size, predicted production during the current year, and expected rates of natural mortality and crippling loss. The Service believes that it has insufficient experience with this harvest strategy and that proposed modifications are premature. The Service also notes the high harvest potential for this species and is concerned that an overly aggressive harvest strategy could precipitate a return to closed seasons. The Service will continue to monitor canvasback harvests and population status and may be willing to consider modifications in the future.

ii. Pintails

Council Recommendations: The Central Flyway Council recommended a harvest strategy for pintails based on the breeding population size. The pintail daily bag limit would be 1 with a pintail breeding population below 3.0 million; 2 with a breeding population between 3.0 and 4.5 million; 3 with a breeding population between 4.5 and 5.6 million; and equal to the overall daily bag limit with a breeding population above 5.6 million.

The Pacific Flyway Council recommended guidelines for the 1996–97 Pacific Flyway pintail harvest regulations based on a prescriptive basis. A matrix of breeding population size from a subset of survey strata association with the Pacific Flyway breeding population and the numbers of prairie ponds counted during the May survey would determine bag limits.

Written Comments: The Texas Parks and Wildlife Department urged the Service to adopt the Central Flyway's proposal for a pintail harvest strategy.

Service Response: The Service is supportive of any attempt at a more objective approach to pintail harvest regulations. However, the Service believes that a more deliberate and careful assessment is needed before considering changes in harvest strategies, particularly in light of pintail population status and the harvest liberalization that occurred in 1994 and again during the 1995–96 season. Such an assessment would include, among other things, explicit harvest-management objectives, comprehensive model development for continental pintails, and a consideration of the regulatory constraints imposed by the adaptive harvest strategy for mid-continent mallards. The Service currently is working with the Pacific Flyway Council Study Committee, the Cooperative Fish and Wildlife Research Units, and other interested parties to ensure that such an assessment is forthcoming. To that end, the Service and the National Biological Service have agreed to provide funding that in total exceeds $65,000. The Service is hopeful that additional funding can be made available from the States and other organizations to complete development of population models and an acceptable adaptive harvest strategy for pintails.

iii. September Teal Seasons

Council Recommendations: The Upper-Region Regulations Committee of the Mississippi Flyway Council recommended a 5-day experimental September teal season be offered to the production States of Iowa, Michigan, Minnesota, and Wisconsin for a 3-year period. The Committee recommended a daily bag limit of 4 teal with sunrise to sunset shooting hours.

The Central Flyway Council recommended a harvest strategy of linking regulatory packages developed for the September teal season with those developed for the regular duck season under the AHM process. For 1996, the Council recommended either a ''restrictive'' package of 5 days with a daily bag limit of 3 teal, a ''moderate'' package of 9 days with a daily bag limit of 4 teal, or a ''liberal'' package of 16 days with a daily bag limit of 5 teal.

Public-Hearing Comments: Mr. Joe Kramer representing the Central Flyway Council indicated that the Central and Mississippi Flyway Councils would complete a more comprehensive harvest approach for special teal seasons by March 1997.

Service Response: The Service previously determined in the Supplemental Environmental Impact Statement: Issuance of Annual Regulations Permitting the Sport Hunting of Migratory Birds (SEIS 88) that proposals for expansion of existing special regulations require a comprehensive evaluation plan containing study objectives, experimental design, decision criteria, and identification of data needs. The Service believes that the proper approach for permitting experimental expansions would be to design a

comprehensive study that would evaluate the cumulative impacts of all teal-season hunting opportunities, in both production and non-production States, on teal and other ducks. The proposals recommended by the Flyways are disjunct, with one containing an evaluation plan (Mississippi Flyway) and the other (Central Flyway) absent one. As such, these proposals represent a fragmented approach to expanding and evaluating teal-season hunting opportunities, which is inconsistent with the desire of the Service. Future consideration by the Service of any proposal to expand teal-season hunting opportunities will take into account the evaluation plan, the manpower and funding requirements necessary to implement the plan, and the priority of this issue relative to other Service programs.

iv. September Duck Seasons

Council Recommendations: The Upper-Region Regulations Committee of the Mississippi Flyway Council recommended Iowa be allowed to hold up to 5 days of its regular duck hunting season in September, starting no earlier than the Saturday nearest September 14. The remainder of the Iowa regular duck season could begin no earlier than October 10.

Service Response: The Service previously determined in SEIS 88 that the extension of framework dates into September for Iowa's September duck season was a type of special season. The original evaluation of this season suggested little impact on duck species other than teal. However, the Service notes that the original evaluation did not include information from the periods requested in the proposal, so inferences about effects of the proposed changes on duck populations are not clear. More importantly, the Service believes that mixed-species special seasons (as defined in the context of SEIS 88) are not a preferred management approach, and does not wish to entertain refinements to this season or foster expansions of this type of season into other States.

4. Canada Geese

A. Special Seasons

Council Recommendations: The Atlantic Flyway Council recommended the frameworks for September Canada goose seasons in the Atlantic Flyway be modified as follows:

September 1–15: Montezuma region of New York, Lake Champlain region of New York and Vermont, Maryland (Caroline, Cecil, Dorchester, and Talbot Counties), South Carolina, and Delaware.

September 1–20: North Carolina (Currituck, Camden, Pasquotank, Perquimans, Chowan, Bertie, Washington, Tyrrell, Dare, and Hyde Counties).

September 1–30: New Jersey and remaining portion of North Carolina.

September 1–25: Remaining portion of Flyway, except Georgia and Florida.

The Lower-Region Regulations Committee of the Mississippi Flyway Council recommended the Service continue to closely monitor the impacts of early Canada goose seasons, including both special seasons and September openings of regular seasons, to insure that cumulative impacts do not adversely affect migrant Canada geese and to insure that special seasons adhere to the criteria established by the Service.

The Upper-Region Regulations Committee of the Mississippi Flyway Council, the Central Flyway Council, and the Pacific Flyway Council made several September Canada goose seasons recommendations. All of the recommendations were within the established criteria for special Canada goose seasons published in the August 29, 1995, Federal Register (60 FR 45020).

Written Comments: The Massachusetts Division of Fisheries and Wildlife supported extending the frameworks for September Canada goose seasons in the Atlantic Flyway to September 25.

Service Response: The Service agrees with the Atlantic Flyway's request to modify the frameworks for special early Canada goose seasons in the Atlantic Flyway and is proposing to grant the Atlantic Flyway a temporary exemption to the special early Canada goose season criteria. Specifically, the Service is proposing to allow States in the Atlantic Flyway to extend the framework closing date from September 15 to September 25, except in certain areas where migrant geese are known to arrive early. The Service is proposing this temporary exemption because of the suspension of the regular season on Atlantic Population Canada geese and the Flyway's need for greater flexibility in dealing with increasing numbers of resident Canada geese. The exemption is proposed to remain in effect until the regular season on migrant Canada geese is reinstated.

Generally, the Service agrees with the Council's recommended framework modifications. For seasons extending beyond September 25, however, the Service proposes to classify these as experimental. Additionally, in view of the reinstatement of existing criteria when regular seasons on Canada geese are reinstated in the Flyway, the Service encourages all States selecting framework dates after September 15 to continue with data-gathering and monitoring efforts in order to further evaluate whether any proportional changes in the harvest of migrant geese do occur.

B. Regular Seasons

Council Recommendations: The Upper-Region Regulations Committee of the Mississippi Flyway Council recommended a September 21 framework opening date for the regular goose season in the Upper Peninsula of Michigan and statewide in Wisconsin.

The Pacific Flyway Council reiterated its 1995 recommendation that Alaska, Oregon, and Washington take actions to reduce the harvest of dusky Canada geese.

Service Response: Regarding the Pacific Flyway Council's recommendation, the Service recognizes the need for this and proposes to establish uniform criteria to measure the harvest of dusky Canada geese in Washington's and Oregon's Quota Zones. The Service solicits input from the Council and other parties in the development of these criteria for the 1996–97 season.

9. Sandhill Cranes

Council Recommendations: The Central Flyway Council recommended Wyoming's sandhill crane hunt area expand to include Park and Big Horn Counties.

The Pacific Flyway Council recommended season modifications in Montana and Wyoming. In Montana, the Council recommended a new hunt zone in the Ovando-Helmville area. In Wyoming, the Council recommended expanding the season from 3 to 8 days, increasing the number of permits, and establishing a new hunt zone in Park and Big Horn Counties.

14. Woodcock

The Service is increasingly concerned about the gradual long-term declines in woodcock populations in the Eastern and Central management regions. Although habitat changes appear to be the primary cause of the declines, the Service believes that hunting regulations should be commensurate with the woodcock population status and rates of declines. The Service seeks active participation by the Atlantic and Mississippi Flyway Councils in the development of short and long-term woodcock harvest management strategies, which identify the circumstances under which additional

harvest restrictions should be implemented and what those restrictions should be.

18. Alaska

Council Recommendations: The Pacific Flyway Council recommended the establishment of separate basic limits for geese. For dark geese, the Council recommended a basic daily bag limit of 4, with 8 in possession. For light geese, the Council recommended a daily bag limit of 3, with 6 in possession. The proposed limits would be subject to area restrictions for Canada geese and limits for brant and emperor geese would remain separate.

Public Comment Invited

The Service intends that adopted final rules be as responsive as possible to all concerned interests, and wants to obtain the comments and suggestions from all interested areas of the public, as well as other governmental agencies. Such comments, and any additional information received, may lead to final regulations that differ from these proposals. However, special circumstances involved in the establishment of these regulations limit the amount of time the Service can allow for public comment. Specifically, two considerations compress the time in which the rulemaking process must operate: (1) the need to establish final rules at a point early enough in the summer to allow affected State agencies to appropriately adjust their licensing and regulatory mechanisms; and (2) the unavailability, before mid-June, of specific, reliable data on this year's status of some waterfowl and migratory shore and upland game bird populations. Therefore, the Service believes allowing comment periods past the dates specified is contrary to public interest.

Comment Procedure

It is the policy of the Department of the Interior to afford the public an opportunity to participate in the rulemaking process, whenever practical. Accordingly, interested persons may participate by submitting written comments to the Chief, MBMO, at the address listed under the caption **ADDRESSES**. The public may inspect comments during normal business hours at the Service's office address listed under the caption **ADDRESSES**. The Service will consider all relevant comments received and will try to acknowledge received comments, but may not provide an individual response to each commenter.

NEPA Consideration

NEPA considerations are covered by the programmatic document, ''Final Supplemental Environmental Impact Statement: Issuance of Annual Regulations Permitting the Sport Hunting of Migratory Birds (FSES 88–14),'' filed with EPA on June 9, 1988. The Service published a Notice of Availability in the June 16, 1988, Federal Register (53 FR 22582). The Service published its Record of Decision on August 18, 1988 (53 FR 31341). Copies of these documents are available from the Service at the address indicated under the caption ADDRESSES.

Endangered Species Act Consideration

As in the past, the Service will design hunting regulations to remove or alleviate chances of conflict between migratory game bird hunting seasons and the protection and conservation of endangered and threatened species. Consultations are presently under way to ensure that actions resulting from these regulatory proposals will not likely jeopardize the continued existence of endangered or threatened species or result in the destruction or adverse modification of their critical habitat. Findings from these consultations will be included in a biological opinion and may cause modification of some regulatory measures proposed in this document. The final frameworks will reflect any modifications. The Service's biological opinions resulting from its Section 7 consultation are public documents available for public inspection in the Service's Division of Endangered Species and MBMO, at the address indicated under the caption **ADDRESSES**.

Regulatory Flexibility Act; Executive Order (E.O.) 12866 and the Paperwork Reduction Act

In the March 22, 1996, Federal Register, the Service reported measures it took to comply with requirements of the Regulatory Flexibility Act and E.O. 12866. One measure was to prepare a Small Entity Flexibility Analysis (Analysis) in 1995 documenting the significant beneficial economic effect on a substantial number of small entities. The Analysis estimated that migratory bird hunters would spend between $258 and $586 million at small businesses. Copies of the Analysis are available upon request from the Office of Migratory Bird Management. This rule was not subject to review by the Office of Management and Budget under E.O. 12866.

The Service examined these proposed regulations under the Paperwork Reduction Act of 1995 and found no information collection requirements.

List of Subjects in 50 CFR Part 20

Exports, Hunting, Imports, Reporting and recordkeeping requirements, Transportation, Wildlife.

The rules that eventually will be promulgated for the 1996–97 hunting season are authorized under 16 U.S.C. 703–711, 16 U.S.C. 712, and 16 U.S.C. 742 a–j.

Dated: July 10, 1996

George T. Frampton, Jr.,

Assistant Secretary for Fish and Wildlife and Parks.

Proposed Regulations Frameworks for 1996–97 Early Hunting Seasons on Certain Migratory Game Birds

Pursuant to the Migratory Bird Treaty Act and delegated authorities, the Department of the Interior approved the following proposed frameworks which prescribe season lengths, bag limits, shooting hours, and outside dates within which States may select for certain migratory game birds between September 1, 1996, and March 10, 1997.

General

Dates: All outside dates noted below are inclusive.

Shooting and Hawking (taking by falconry) Hours: Unless otherwise specified, from one-half hour before sunrise to sunset daily.

Possession Limits: Unless otherwise specified, possession limits are twice the daily bag limit.

Area, Zone, and Unit Descriptions: Geographic descriptions are contained in a later portion of this document.

Special September Teal Season

Outside Dates: Between September 1 and September 30, an open season on all species of teal may be selected by Alabama, Arkansas, Colorado (Central Flyway portion only), Illinois, Indiana, Kansas, Kentucky, Louisiana, Mississippi, Missouri, New Mexico (Central Flyway portion only), Ohio, Oklahoma, Tennessee, and Texas in areas delineated by State regulations.

Hunting Seasons and Daily Bag Limits: Not to exceed 9 consecutive days, with a daily bag limit of 4 teal.

Shooting Hours: One-half hour before sunrise to sunset, except in Arkansas, Illinois, Indiana, Missouri, and Ohio, where the hours are from sunrise to sunset.

Special September Duck Seasons

Florida: An experimental 5-consecutive-day season may be selected in September. The daily bag limit may not exceed 4 teal and wood ducks in the aggregate.

Kentucky and Tennessee: In lieu of a special September teal season, an experimental 5-consecutive-day season may be selected in September. The daily bag limit may not exceed 4 teal and wood ducks in the aggregate, of which no more than 2 may be wood ducks.

Iowa: Iowa may hold up to 5 days of its regular duck hunting season in September. All ducks which are legal during the regular duck season may be taken during the September segment of the season. The September season segment may commence no earlier than the Saturday nearest September 20 (September 21, 1996), with daily bag and possession limits being the same as those in effect last year. The remainder of the regular duck season may not begin before October 15.

Scoter, Eider, and Oldsquaw Ducks (Atlantic Flyway)

Outside Dates: Between September 15 and January 20.

Hunting Seasons and Daily Bag Limits: Not to exceed 107 days, with a daily bag limit of 7, singly or in the aggregate of the listed sea-duck species, of which no more than 4 may be scoters.

Daily Bag Limits During the Regular Duck Season: Within the special sea duck areas, during the regular duck season in the Atlantic Flyway, States may choose to allow the above sea duck limits in addition to the limits applying to other ducks during the regular duck season. In all other areas, sea ducks may be taken only during the regular open season for ducks and must be included in the regular duck season daily bag and possession limits.

Areas: In all coastal waters and all waters of rivers and streams seaward from the first upstream bridge in Maine, New Hampshire, Massachusetts, Rhode Island, Connecticut, and New York; in any waters of the Atlantic Ocean and in any tidal waters of any bay which are separated by at least 1 mile of open water from any shore, island, and emergent vegetation in New Jersey, South Carolina, and Georgia; and in any waters of the Atlantic Ocean and in any tidal waters of any bay which are separated by at least 800 yards of open water from any shore, island, and emergent vegetation in Delaware, Maryland, North Carolina and Virginia; and provided that any such areas have been described, delineated, and designated as special sea-duck hunting areas under the hunting regulations adopted by the respective States.

Special Early Canada Goose Seasons

Atlantic Flyway

General Seasons

Canada goose seasons of up to 15 days during September 1–15 may be selected for the Montezuma Region of New York; the Lake Champlain Region of New York and Vermont; the Counties of Caroline, Cecil, Dorchester, and Talbot in Maryland; Delaware; and Crawford County in Pennsylvania. Seasons not to exceed 20 days during September 1–20 may be selected for the Northeast Hunt Unit of North Carolina. Seasons may not exceed 25 days during September 1–25 in the remainder of the Flyway, except Georgia and Florida, where the season is closed. Areas open to the hunting of Canada geese must be described, delineated, and designated as such in each State's hunting regulations.

Daily Bag Limits: Not to exceed 5 Canada geese.

Experimental Seasons

Experimental Canada goose seasons of up to 30 days during September 1–30 may be selected by New Jersey, North Carolina (except in the Northeast Hunt Unit), and South Carolina. Areas open to the hunting of Canada geese must be described, delineated, and designated as such in each State's hunting regulations.

Daily Bag Limits: Not to exceed 5 Canada geese.

Mississippi Flyway

General Seasons

Canada goose seasons of up to 15 days during September 1-15 may be selected by Illinois, Indiana, Iowa, Michigan (except in the Upper Peninsula, where the season may not extend beyond September 10, and in Huron, Saginaw and Tuscola Counties, where no special season may be held), Minnesota, Missouri, Ohio, Tennessee, and Wisconsin. The daily bag limit may not exceed 5 Canada geese. Areas open to the hunting of Canada geese must be described, delineated, and designated as such in each State's hunting regulations.

Central Flyway

General Seasons

Canada goose seasons of up to 15 days during September 1–15 may be selected by South Dakota. The daily bag limit may not exceed 5 Canada geese. Areas open to the hunting of Canada geese must be described, delineated, and designated as such in each State's hunting regulations.

Pacific Flyway

General Seasons

Wyoming may select an 8-day season on Canada geese between September 1–15. This season is subject to the following conditions:

1. Where applicable, the season must be concurrent with the September portion of the sandhill crane season.
2. All participants must have a valid State permit for the special season.
3. A daily bag limit of 2, with season and possession limits of 6 will apply to the special season.

Oregon may select a special Canada goose season of up to 15 days during the period September 1–15. Daily bag limits not to exceed 3 Canada geese with 6 in possession.

Washington may select a special Canada goose season of up to 15 days during the period September 1–15. Daily bag limits not to exceed 3 Canada geese with 6 in possession.

Idaho may select a 15-day season in the special East Canada Goose Zone as described in State regulations during the period September 1–15. All participants must have a valid State permit and the total number of permits issued is not to exceed 110 for this zone. The daily bag limit is 2 and the possession limit is 4.

Idaho may select a 7-day Canada Goose Season during the period September 1–15 in Nez Perce County with a bag limit of 4 and a possession limit of 8. All participants must have a valid State permit and the total number of permits is not to exceed 200 for the season in Nez Perce County.

Areas open to hunting of Canada geese in each State must be described, delineated, and designated as such in each State's hunting regulations.

Regular Goose Seasons

Regular goose seasons in Wisconsin and the Upper Peninsula of Michigan may open as early as September 21. Season lengths and bag and possession limits will be the same as those in effect last year but are subject to change during the late-season regulations process.

Sandhill Cranes

Regular Seasons in the Central Flyway:

Outside Dates: Between September 1 and February 28.

Hunting Seasons: Seasons not to exceed 58 consecutive days may be selected in designated portions of the following States: Colorado, Kansas, Montana, North Dakota, South Dakota, and Wyoming. Seasons not to exceed 93 consecutive days may be selected in designated portions of the following

States: New Mexico, Oklahoma, and Texas.

Daily Bag Limits: 3 sandhill cranes.

Permits: Each person participating in the regular sandhill crane seasons must have a valid Federal sandhill crane hunting permit in their possession while hunting.

Special Seasons in the Central and Pacific Flyways:

Arizona, Colorado, Idaho, Montana, New Mexico, Utah, and Wyoming may select seasons for hunting sandhill cranes within the range of the Rocky Mountain Population subject to the following conditions:

Outside Dates: Between September 1 and January 31.

Hunting Seasons: The season in any State or zone may not exceed 30 days.

Bag limits: Not to exceed 3 daily and 9 per season.

Permits: Participants must have a valid permit, issued by the appropriate State, in their possession while hunting.

Other provisions: Numbers of permits, open areas, season dates, protection plans for other species, and other provisions of seasons must be consistent with the management plan and approved by the Central and Pacific Flyway Councils. Seasons in Montana and the Park-Big Horn Unit in Wyoming are experimental.

Common Moorhens and Purple Gallinules

Outside Dates: Between September 1 and January 20 in the Atlantic Flyway, and between September 1 and the Sunday nearest January 20 (January 19) in the Mississippi and Central Flyways. States in the Pacific Flyway have been allowed to select their hunting seasons between the outside dates for the season on ducks; therefore, they are late-season frameworks and no frameworks are provided in this document.

Hunting Seasons and Daily Bag Limits: Seasons may not exceed 70 days in the Atlantic, Mississippi, and Central Flyways. Seasons may be split into 2 segments. The daily bag limit is 15 common moorhens and purple gallinules, singly or in the aggregate of the two species.

Rails

Outside Dates: States included herein may select seasons between September 1 and January 20 on clapper, king, sora, and Virginia rails.

Hunting Seasons: The season may not exceed 70 days, and may be split into 2 segments.

Daily Bag Limits:

Clapper and King Rails - In Rhode Island, Connecticut, New Jersey, Delaware, and Maryland, 10, singly or in the aggregate of the two species. In Texas, Louisiana, Mississippi, Alabama, Georgia, Florida, South Carolina, North Carolina, and Virginia, 15, singly or in the aggregate of the two species.

Sora and Virginia Rails - In the Atlantic, Mississippi, and Central Flyways and the Pacific-Flyway portions of Colorado, Montana, New Mexico, and Wyoming, 25 daily and 25 in possession, singly or in the aggregate of the two species. The season is closed in the remainder of the Pacific Flyway.

Common Snipe

Outside Dates: Between September 1 and February 28, except in Maine, Vermont, New Hampshire, Massachusetts, Rhode Island, Connecticut, New York, New Jersey, Delaware, Maryland, and Virginia, where the season must end no later than January 31.

Hunting Seasons and Daily Bag Limits: Seasons may not exceed 107 days and may be split into two segments. The daily bag limit is 8 snipe.

American Woodcock

Outside Dates: States in the Atlantic Flyway may select hunting seasons between October 1 and January 31. States in the Central and Mississippi Flyways may select hunting seasons between September 1 and January 31.

Hunting Seasons and Daily Bag Limits: In the Atlantic Flyway, seasons may not exceed 45 days, with a daily bag limit of 3; in the Central and Mississippi Flyways, seasons may not exceed 65 days, with a daily bag limit of 5. Seasons may be split into two segments.

Zoning: New Jersey may select seasons in each of two zones. The season in each zone may not exceed 35 days.

Band-tailed Pigeons

Pacific Coast States (California, Oregon, Washington, and Nevada)

Outside Dates: Between September 15 and January 1.

Hunting Seasons and Daily Bag Limits: Not more than 9 consecutive days, with bag and possession limits of 2 and 2 band-tailed pigeons, respectively.

Permit Requirement: The appropriate State agency must issue permits, and report on harvest and hunter participation to the Service by June 1 of the following year, or participate in the Migratory Bird Harvest Information Program.

Zoning: California may select hunting seasons not to exceed 9 consecutive days in each of two zones. The season in the North Zone must close by October 7.

Four-Corners States (Arizona, Colorado, New Mexico, and Utah)

Outside Dates: Between September 1 and November 30.

Hunting Seasons and Daily Bag Limits: Not more than 30 consecutive days, with a daily bag limit of 5 band-tailed pigeons.

Permit Requirement: The appropriate State agency must issue permits, and report on harvest and hunter participation to the Service by June 1 of the following year, or participate in the Migratory Bird Harvest Information Program.

Zoning: New Mexico may select hunting seasons not to exceed 20 consecutive days in each of two zones. The season in the South Zone may not open until October 1.

Mourning Doves

Outside Dates: Between September 1 and January 15, except as otherwise provided, States may select hunting seasons and daily bag limits as follows:

Eastern Management Unit (All States east of the Mississippi River, and Louisiana)

Hunting Seasons and Daily Bag Limits: Not more than 70 days with a daily bag limit of 12, or not more than 60 days with a daily bag limit of 15.

Zoning and Split Seasons: States may select hunting seasons in each of two zones. The season within each zone may be split into not more than three periods. The hunting seasons in the South Zones of Alabama, Florida, Georgia, Louisiana, and Mississippi may commence no earlier than September 20. Regulations for bag and possession limits, season length, and shooting hours must be uniform within specific hunting zones.

Central Management Unit (Arkansas, Colorado, Iowa, Kansas, Minnesota, Missouri, Montana, Nebraska, New Mexico, North Dakota, Oklahoma, South Dakota, Texas, and Wyoming)

Hunting Seasons and Daily Bag Limits: Not more than 70 days with a daily bag limit of 12, or not more than 60 days with a daily bag limit of 15.

Zoning and Split Seasons: States may select hunting seasons in each of two zones. The season within each zone may be split into not more than three periods. Texas may select hunting seasons for each of three zones subject to the following conditions:

A. The hunting season may be split into not more than two periods, except

in that portion of Texas in which the special white-winged dove season is allowed, where a limited mourning dove season may be held concurrently with that special season (see white-winged dove frameworks).

B. A season may be selected for the North and Central Zones between September 1 and January 25; and for the South Zone between September 20 and January 25.

C. Each zone may have a daily bag limit of 12 doves (15 under the alternative) in the aggregate, no more than 6 of which may be white-winged doves and no more than 2 of which may be white-tipped doves, except that during the special white-winged dove season, the daily bag limit may not exceed 10 white-winged, mourning, and white-tipped doves in the aggregate, of which no more than 5 may be mourning doves and 2 may be white-tipped doves.

D. Except as noted above, regulations for bag and possession limits, season length, and shooting hours must be uniform within each hunting zone.

Western Management Unit (Arizona, California, Idaho, Nevada, Oregon, Utah, and Washington)

Hunting Seasons and Daily Bag Limits: Idaho, Nevada, Oregon, Utah, and Washington - Not more than 30 consecutive days with a daily bag limit of 10 mourning doves (in Nevada, the daily bag limit may not exceed 10 mourning and white-winged doves in the aggregate).

Arizona and California - Not more than 60 days which may be split between two periods, September 1-15 and November 1-January 15. In Arizona, during the first segment of the season, the daily bag limit is 10 mourning and white-winged doves in the aggregate, of which no more than 6 may be white-winged doves. During the remainder of the season, the daily bag limit is restricted to 10 mourning doves. In California, the daily bag limit may not exceed 10 mourning and white-winged doves in the aggregate.

White-winged and White-tipped Doves

Hunting Seasons and Daily Bag Limits:

Except as shown below, seasons in Arizona, California, Florida, Nevada, New Mexico, and Texas must be concurrent with mourning dove seasons.

Arizona may select a hunting season of not more than 30 consecutive days, running concurrently with the first segment of the mourning dove season. The daily bag limit may not exceed 10 mourning and white-winged doves in the aggregate, of which no more than 6 may be white-winged doves.

In Florida, the daily bag limit may not exceed 12 mourning and white-winged doves (15 under the alternative) in the aggregate, of which no more than 4 may be white-winged doves.

In the Nevada Counties of Clark and Nye, and in the California Counties of Imperial, Riverside, and San Bernardino, the daily bag limit may not exceed 10 mourning and white-winged doves in the aggregate.

In New Mexico, the daily bag limit may not exceed 12 mourning and white-winged doves (15 under the alternative) in the aggregate.

In Texas, the daily bag limit may not exceed 12 mourning, white-winged, and white-tipped doves (15 under the alternative) in the aggregate, of which not more than 6 may be white-winged doves and not more than 2 may be white-tipped doves.

In addition, Texas may also select a hunting season of not more than 4 days for the special white-winged dove area of the South Zone between September 1 and September 19. The daily bag limit may not exceed 10 white-winged, mourning, and white-tipped doves in the aggregate, of which no more than 5 may be mourning doves and 2 may be white-tipped doves.

Alaska

Outside Dates: Between September 1 and January 26.

Hunting Seasons: Alaska may select 107 consecutive days for waterfowl, sandhill cranes, and common snipe in each of five zones. The season may be split without penalty in the Kodiak Zone. The seasons in each zone must be concurrent.

Closures: The season is closed on Canada geese from Unimak Pass westward in the Aleutian Island chain. The hunting season is closed on Aleutian Canada geese, emperor geese, spectacled eiders, and Steller's eiders.

Daily Bag and Possession limits:

Ducks - Except as noted, a basic daily bag limit of 7 and a possession limit of 21 ducks. Daily bag and possession limits in the North Zone are 10 and 30, and in the Gulf Coast Zone they are 8 and 24, respectively. The basic limits may include no more than 1 canvasback daily and 3 in possession.

In addition to the basic limit, there is a daily bag limit of 15 and a possession limit of 30 scoter, common and king eiders, oldsquaw, harlequin, and common and red-breasted mergansers, singly or in the aggregate of these species.

Light Geese - A basic daily bag limit of 3 and a possession limit of 6.

Dark Geese - A basic daily bag limit of 4 and a possession limit of 8.

Dark-goose seasons are subject to the following restrictions:

1. In Units 9(e) and 18, the limits for Canada geese are 1 daily and 2 in possession.
2. In Units 5 and 6, the taking of Canada geese is permitted from September 28 through December 16. Middleton Island is closed to the taking of Canada geese.
3. In Unit 10 (except Unimak Island), the taking of Canada geese is prohibited.

Brant - A daily bag limit of 2.

Common snipe - A daily bag limit of 8.

Sandhill cranes - A daily bag limit of 3.

Tundra swans - Open seasons for tundra swans may be selected subject to the following conditions:

1. No more than 300 permits may be issued in GMU 22, authorizing each permittee to take 1 tundra swan per season.
2. No more than 500 permits may be issued during the operational season in GMU 18. No more than 1 tundra swan may be taken per permit.
3. The seasons must be concurrent with other migratory bird seasons.
4. The appropriate State agency must issue permits, obtain harvest and hunter-participation data, and report the results of this hunt to the Service by June 1 of the following year.

Hawaii

Outside Dates: Between September 1 and January 15.

Hunting Seasons: Not more than 60 days (70 under the alternative) for mourning doves.

Bag Limits: Not to exceed 15 (12 under the alternative) mourning doves.

Note: Mourning doves may be taken in Hawaii in accordance with shooting hours and other regulations set by the State of Hawaii, and subject to the applicable provisions of 50 CFR part 20.

Puerto Rico

Doves and Pigeons:

Outside Dates: Between September 1 and January 15.

Hunting Seasons: Not more than 60 days.

Daily Bag and Possession Limits: Not to exceed 10 Zenaida, mourning, and white-winged doves in the aggregate. Not to exceed 5 scaly-naped pigeons.

Closed Areas: There is no open season on doves or pigeons in the following areas: Municipality of Culebra, Desecheo Island, Mona Island, El Verde Closure Area, and Cidra Municipality and adjacent areas.

Ducks, Coots, Moorhens, Gallinules, and Snipe:

Outside Dates: Between October 1 and January 31.

Hunting Seasons: Not more than 55 days may be selected for hunting ducks, common moorhens, and common snipe. The season may be split into two segments.

Daily Bag Limits:

Ducks - Not to exceed 5.

Common moorhens - Not to exceed 6.

Common snipe - Not to exceed 8.

Closed Seasons: The season is closed on the ruddy duck, white-cheeked pintail, West Indian whistling duck, fulvous whistling duck, and masked duck, which are protected by the Commonwealth of Puerto Rico. The season also is closed on the purple gallinule, American coot, and Caribbean coot.

Closed Areas: There is no open season on ducks, common moorhens, and common snipe in the Municipality of Culebra and on Desecheo Island.

Virgin Islands

Doves and Pigeons:

Outside Dates: Between September 1 and January 15.

Hunting Seasons: Not more than 60 days for Zenaida doves.

Daily Bag and Possession Limits: Not to exceed 10 Zenaida doves.

Closed Seasons: No open season is prescribed for ground or quail doves, or pigeons in the Virgin Islands.

Closed Areas: There is no open season for migratory game birds on Ruth Cay (just south of St. Croix).

Local Names for Certain Birds: Zenaida dove, also known as mountain dove; bridled quail-dove, also known as Barbary dove or partridge; Common ground-dove, also known as stone dove, tobacco dove, rola, or tortolita; scaly-naped pigeon, also known as red-necked or scaled pigeon.

Ducks

Outside Dates: Between December 1 and January 31.

Hunting Seasons: Not more than 55 consecutive days.

Daily Bag Limits: Not to exceed 5.

Closed Seasons: The season is closed on the ruddy duck, white-cheeked pintail, West Indian whistling duck, fulvous whistling duck, and masked duck.

Special Falconry Regulations

Falconry is a permitted means of taking migratory game birds in any State meeting Federal falconry standards in 50 CFR 21.29(k). These States may select an extended season for taking migratory game birds in accordance with the following:

Extended Seasons: For all hunting methods combined, the combined length of the extended season, regular season, and any special or experimental seasons shall not exceed 107 days for any species or group of species in a geographical area. Each extended season may be divided into a maximum of 3 segments.

Framework Dates: Seasons must fall between September 1 and March 10.

Daily Bag and Possession Limits: Falconry daily bag and possession limits for all permitted migratory game birds shall not exceed 3 and 6 birds, respectively, singly or in the aggregate, during extended falconry seasons, any special or experimental seasons, and regular hunting seasons in all States, including those that do not select an extended falconry season.

Regular Seasons: General hunting regulations, including seasons and hunting hours, apply to falconry in each State listed in 50 CFR 21.29(k). Regular-season bag and possession limits do not apply to falconry. The falconry bag limit is not in addition to gun limits.

Area, Unit, and Zone Descriptions

Central Flyway portion of the following States consists of:

Colorado: That area lying east of the Continental Divide.

Montana: That area lying east of Hill, Chouteau, Cascade, Meagher, and Park Counties.

New Mexico: That area lying east of the Continental Divide but outside the Jicarilla Apache Indian Reservation.

Wyoming: That area lying east of the Continental Divide and excluding the Great Divide Portion.

The remaining portions of these States are in the Pacific Flyway.

Mourning and White-winged Doves

Alabama

South Zone - Baldwin, Barbour, Coffee, Conecuh, Covington, Dale, Escambia, Geneva, Henry, Houston, and Mobile Counties.

North Zone - Remainder of the State.

California

White-winged Dove Open Areas - Imperial, Riverside, and San Bernardino Counties.

Florida

Northwest Zone - The Counties of Bay, Calhoun, Escambia, Franklin, Gadsden, Gulf, Holmes, Jackson, Liberty, Okaloosa, Santa Rosa, Walton, Washington, Leon (except that portion north of U.S. 27 and east of State Road 155), Jefferson (south of U.S. 27, west of State Road 59 and north of U.S. 98), and Wakulla (except that portion south of U.S. 98 and east of the St. Marks River).

South Zone - Remainder of State.

Georgia

Northern Zone - That portion of the State lying north of a line running west to east along U.S. Highway 280 from Columbus to Wilcox County, thence southward along the western border of Wilcox County; thence east along the southern border of Wilcox County to the Ocmulgee River, thence north along the Ocmulgee River to Highway 280, thence east along Highway 280 to the Little Ocmulgee River; thence southward along the Little Ocmulgee River to the Ocmulgee River; thence southwesterly along the Ocmulgee River to the western border of the Jeff Davis County; thence south along the western border of Jeff Davis County; thence east along the southern border of Jeff Davis and Appling Counties; thence north along the eastern border of Appling County, to the Altamaha River; thence east to the eastern border of Tattnall County; thence north along the eastern border of Tattnall County; thence north along the western border of Evans to Candler County; thence west along the southern border of Candler County to the Ohoopee River; thence north along the western border of Candler County to Bulloch County; thence north along the western border of Bulloch County to U.S. Highway 301; thence northeast along U.S. Highway 301 to the South Carolina line.

South Zone - Remainder of the State.

Louisiana

North Zone - That portion of the State north of Interstate Highway 10 from the Texas State line to Baton Rouge, Interstate Highway 12 from Baton Rouge to Slidell and Interstate Highway 10 from Slidell to the Mississippi State line.

South Zone - The remainder of the State.

Mississippi

South Zone - The Counties of Forrest, George, Greene, Hancock, Harrison, Jackson, Lamar, Marion, Pearl River, Perry, Pike, Stone, and Walthall.

North Zone - The remainder of the State.

Nevada

White-winged Dove Open Areas - Clark and Nye Counties.

Texas

North Zone - That portion of the State north of a line beginning at the International Bridge south of Fort Hancock; north along FM 1088 to TX 20; west along TX 20 to TX 148; north along TX 148 to I-10 at Fort Hancock; east along I-10 to I-20; northeast along I-20 to I-30 at Fort Worth; northeast along I-30 to the Texas-Arkansas State line.

South Zone - That portion of the State south and west of a line beginning at the International Bridge south of Del Rio, proceeding east on U.S. 90 to San

Antonio; then east on I-10 to Orange, Texas.

Special White-winged Dove Area in the South Zone - That portion of the State south and west of a line beginning at the International Bridge south of Del Rio, proceeding east on U.S. 90 to Uvalde; south on U.S. 83 to TX 44; east along TX 44 to TX 16 at Freer; south along TX 16 to TX 285 at Hebbronville; east along TX 285 to FM 1017; southwest along FM 1017 to TX 186 at Linn; east along TX 186 to the Mansfield Channel at Port Mansfield; east along the Mansfield Channel to the Gulf of Mexico.

Area with additional restrictions - Cameron, Hidalgo, Starr, and Willacy Counties.

Central Zone - That portion of the State lying between the North and South Zones.

Band-tailed Pigeons

California

North Zone - Alpine, Butte, Del Norte, Glenn, Humboldt, Lassen, Mendocino, Modoc, Plumas, Shasta, Sierra, Siskiyou, Tehama, and Trinity Counties.

South Zone - The remainder of the State.

New Mexico

North Zone - North of a line following U.S. 60 from the Arizona State line east to I-25 at Socorro and then south along I-25 from Socorro to the Texas State line.

South Zone - Remainder of the State.

Washington

Western Washington - The State of Washington excluding those portions lying east of the Pacific Crest Trail and east of the Big White Salmon River in Klickitat County.

Woodcock

New Jersey

North Zone - That portion of the State north of NJ 70.

South Zone - The remainder of the State.

Special September Goose Seasons

Atlantic Flyway

North Carolina

Northeast Hunt Unit - Counties of Bertie, Camden, Chovan, Currituck, Dare, Hyde, Pasquotank, Perquimans, Tyrrell, and Washington.

Mississippi Flyway

Illinois

Northeast Zone - Cook, DuPage, Grundy, Kane, Kankakee, Kendall, Lake, McHenry, and Will Counties.

Iowa

North Zone: That portion of the State north of a line extending east from the Nebraska border along State Highway 175 to State 37, southeast along State 37 to U.S. Highway 59, south along U.S. 59 to Interstate Highway 80, then east along I–80 to the Illinois border.

South Zone: The remainder of Iowa.

Minnesota

Twin Cities Metropolitan Canada Goose Zone -

A. All of Hennepin and Ramsey Counties.

B. In Anoka County, all of Columbus Township lying south of County State Aid Highway (CSAH) 18, Anoka County; all of the cities of Ramsey, Andover, Anoka, Coon Rapids, Spring Lake Park, Fridley, Hilltop, Columbia Heights, Blaine, Lexington, Circle Pines, Lino Lakes, and Centerville; and all of the city of Ham Lake except that portion lying north of CSAH 18 and east of U.S. Highway 65.

C. That part of Carver County lying north and east of the following described line: Beginning at the northeast corner of San Francisco Township; thence west along the north boundary of San Francisco Township to the east boundary of Dahlgren Township; thence north along the east boundary of Dahlgren Township to U.S. Highway 212; thence west along U.S. Highway 212 to State Trunk Highway (STH) 284; thence north on STH 284 to County State Aid Highway (CSAH) 10; thence north and west on CSAH 10 to CSAH 30; thence north and west on CSAH 30 to STH 25; thence east and north on STH 25 to CSAH 10; thence north on CSAH 10 to the Carver County line.

D. In Scott County, all of the cities or Shakopee, Savage, Prior Lake, and Jordan, and all of the Townships of Jackson, Louisville, St. Lawrence, Sand Creek, Spring Lake, and Credit River.

E. In Dakota County, all of the cities of Burnsville, Eagan, Mendota Heights, Mendota, Sunfish Lake, Inver Grove Heights, Apple Valley, Lakeville, Rosemount, Farmington, Hastings, Lilydale, West St. Paul, and South St. Paul, and all of the Township of Nininger.

F. That portion of Washington County lying south of the following described line: Beginning at County State Aid Highway (CSAH) 2 on the west boundary of the county; thence east on CSAH 2 to U.S. Highway 61; thence south on U.S. Highway 61 to State Trunk Highway (STH) 97; thence east on STH 97 to the intersection of STH 97 and STH 95; thence due east to the east boundary of the state.

Northwest Goose Zone (included for reference only, not a special September Goose Season Zone) - That portion of the State encompassed by a line extending east from the North Dakota border along U.S. Highway 2 to State Trunk Highway (STH) 32, north along STH 32 to STH 92, east along STH 92 to County State Aid Highway (CSAH) 2 in Polk County, north along CSAH 2 to CSAH 27 in Pennington County, north along CSAH 27 to STH 1, east along STH 1 to CSAH 28 in Pennington County, north along CSAH 28 to CSAH 54 in Marshall County, north along CSAH 54 to CSAH 9 in Roseau County, north along CSAH 9 to STH 11, west along STH 11 to STH 310, and north along STH 310 to the Manitoba border.

Four Goose Zone - That portion of the state encompassed by a line extending north from the Iowa border along U.S. Interstate Highway 35 to the south boundary of the Twin Cities Metropolitan Canada Goose Zone, then west and north along the boundary of the Twin Cities Metropolitan Canada Goose Zone to U.S. Interstate 94, then west and north on U.S. Interstate 94 to the North Dakota border.

Two Goose Zone - That portion of the state to the north of a line extending east from the North Dakota border along U.S. Interstate 94 to the boundary of the Twin Cities Metropolitan Canada Goose Zone, then north and east along the Twin Cities Metropolitan Canada Goose Zone boundary to the Wisconsin border, except the Northwest Goose Zone and that portion of the State encompassed by a line extending north from the Iowa border along U.S. Interstate 35 to the south boundary of the Twin Cities Metropolitan Canada Goose Zone, then east on the Twin Cites Metropolitan Canada Goose Zone boundary to the Wisconsin border.

Tennessee

Middle Tennessee Zone - Those portions of Houston, Humphreys, Montgomery, Perry, and Wayne Counties east of State Highway 13; and Bedford, Cannon, Cheatham, Coffee, Davidson, Dickson, Franklin, Giles, Hickman, Lawrence, Lewis, Lincoln, Macon, Marshall, Maury, Moore, Robertson, Rutherford, Smith, Sumner, Trousdale, Williamson, and Wilson Counties.

Cumberland Plateau Zone - Bledsoe, Bradley, Clay, Cumberland, Dekalb, Fentress, Grundy, Hamilton, Jackson, Marion, McMinn, Meigs, Morgan, Overton, Pickett, Polk, Putnam, Rhea, Roane, Scott, Sequatchie, Van Buren, Warren, and White Counties.

East Tennessee Zone - Anderson, Blount, Campbell, Carter, Claiborne, Cocke, Grainger, Greene, Hamblen, Hancock, Hawkins, Jefferson, Johnson, Knox, Loudon, Monroe, Sevier, Sullivan, Unicoi, Union, and Washington Counties.

Wisconsin

Early-Season Subzone A - That portion of the State encompassed by a line beginning at the Lake Michigan shore in Sheboygan, then west along State Highway 23 to State 67, southerly along State 67 to County Highway E in Sheboygan County, southerly along County E to State 28, south and west along State 28 to U.S. Highway 41, southerly along U.S. 41 to State 33, westerly along State 33 to County Highway U in Washington County, southerly along County U to County N, southeasterly along County N to State 60, westerly along State 60 to County Highway P in Dodge County, southerly along County P to County O, westerly along County O to State 109, south and west along State 109 to State 26, southerly along State 26 to U.S. 12, southerly along U.S. 12 to State 89, southerly along State 89 to U.S. 14, southerly along U.S. 14 to the Illinois border, east along the Illinois border to the Michigan border in Lake Michigan, north along the Michigan border in Lake Michigan to a point directly east of State 23 in Sheboygan, then west along that line to the point of beginning on the Lake Michigan shore in Sheboygan.

Early-Season Subzone B - That portion of the State between Early-Season Subzone A and a line beginning at the intersection of U.S. Highway 141 and the Michigan border near Niagara, then south along U.S. 141 to State Highway 22, west and southwest along State 22 to U.S. 45, south along U.S. 45 to State 22, west and south along State 22 to State 110, south along State 110 to U.S. 10, south along U.S. 10 to State 49, south along State 49 to State 23, west along State 23 to State 73, south along State 73 to State 60, west along State 60 to State 23, south along State 23 to State 11, east along State 11 to State 78, then south along State 78 to the Illinois border.

Pacific Flyway

Idaho

East Zone - Bonneville, Caribou, Fremont and Teton Counties.

Oregon

Northwest Zone - Benton, Clackamus, Clatsop, Columbia, Lincoln, Linn, Marion, Polk, Multnomah, Tillamook, Washington, Wayne, and Yamhill Counties.

Southwest Zone - Coos, Curry, Douglas, Jackson, Josephine, and Klamath Counties.

East Zone - Baker, Gilliam, Malheur, Morrow, Sherman, Umatilla, Union and Wasco Counties.

Washington

Southwest Zone - Clark, Colitz, Pacific, and Wahkiakum Counties.

East Zone - Asotin, Benton, Columbia, Garfield, Klickitat, and Whitman Counties.

Wyoming

Bear River Area - That portion of Lincoln County described in State regulations.

Salt River Area - That portion of Lincoln County described in State regulations.

Farson-Edon Area - Those portions of Sweetwater and Sublette Counties described in State regulations.

Teton Area - Those portions of Teton County described in State regulations.

Ducks

Mississippi Flyway

Iowa

North Zone: That portion of the State north of a line extending east from the Nebraska border along State Highway 175 to State 37, southeast along State 37 to U.S. Highway 59, south along U.S. 59 to Interstate Highway 80, then east along I–80 to the Illinois border.

South Zone: The remainder of Iowa.

Sandhill Cranes

Central Flyway

Colorado

Regular-Season Open Area - The Central Flyway portion of the State except the San Luis Valley (Alamosa, Conejos, Costilla, Hinsdale, Mineral, Rio Grande and Saguache Counties east of the Continental Divide) and North Park (Jackson County).

Kansas

Regular Season Open Area - That portion of the State west of a line beginning at the Oklahoma border, north on I-35 to Wichita, north on I-135 to Salina, and north on U.S. 81 to the Nebraska border.

New Mexico

Regular-Season Open Area - Chaves, Curry, De Baca, Eddy, Lea, Quay, and Roosevelt Counties.

Middle Rio Grande Valley Area - The Central Flyway portion of New Mexico in Socorro and Valencia Counties.

Southwest Zone - Sierra, Luna, and Dona Ana Counties.

Oklahoma

Regular-Season Open Area - That portion of the State west of I-35.

Texas

Regular-Season Open Area - That portion of the State west of a line from the International Toll Bridge at Brownsville along U.S. 77 to Victoria; U.S. 87 to Placedo; Farm Road 616 to Blessing; State 35 to Alvin; State 6 to U.S. 290; U.S. 290 to Austin; I-35 to the Texas-Oklahoma border.

North Dakota

Regular-Season Open Area - That portion of the State west of U.S. 281.

South Dakota

Regular-Season Open Area - That portion of the State west of U.S. 281.

Montana

Regular-Season Open Area - The Central Flyway portion of the State except that area south of I-90 and west of the Bighorn River.

Wyoming

Regular-Season Open Area - Campbell, Converse, Crook, Goshen, Laramie, Niobrara, Platte, and Weston Counties.

Riverton-Boysen Unit - Portions of Fremont County.

Park and Bighorn County Unit - Portions of Park and Bighorn Counties.

Pacific Flyway

Arizona

Special-Season Area - Game Management Units 30A, 30B, 31, and 32.

Montana

Special-Season Area - See State regulations.

Utah

Special-Season Area - Rich County.

Wyoming

Bear River Area - That portion of Lincoln County described in State regulations.

Salt River Area - That portion of Lincoln County described in State regulations.

Eden-Farson Area - Those portions of Sweetwater and Sublette Counties described in State regulations.

All Migratory Game Birds in Alaska

North Zone - State Game Management Units 11-13 and 17-26.

Gulf Coast Zone - State Game Management Units 5-7, 9, 14-16, and 10 - Unimak Island only.

Southeast Zone - State Game Management Units 1-4.

Pribilof and Aleutian Islands Zone - State Game Management Unit 10 - except Unimak Island.

Kodiak Zone - State Game Management Unit 8.

All Migratory Birds in the Virgin Islands

Ruth Cay Closure Area - The island of Ruth Cay, just south of St. Croix.

All Migratory Birds in Puerto Rico

Municipality of Culebra Closure Area - All of the municipality of Culebra.

Desecheo Island Closure Area - All of Desecheo Island.

Mona Island Closure Area - All of Mona Island.

El Verde Closure Area - Those areas of the municipalities of Rio Grande and Loiza delineated as follows: (1) All

lands between Routes 956 on the west and 186 on the east, from Route 3 on the north to the juncture of Routes 956 and 186 (Km 13.2) in the south; (2) all lands between Routes 186 and 966 from the juncture of 186 and 966 on the north, to the Caribbean National Forest Boundary on the south; (3) all lands lying west of Route 186 for one kilometer from the juncture of Routes 186 and 956 south to Km 6 on Route 186; (4) all lands within Km 14 and Km 6 on the west and the Caribbean National Forest Boundary on the east; and (5) all lands within the Caribbean National Forest Boundary whether private or public.

Cidra Municipality and adjacent areas - All of Cidra Municipality and portions of Aguas, Buenas, Caguas, Cayer, and Comerio Municipalities as encompassed within the following boundary: beginning on Highway 172 as it leaves the municipality of Cidra on the west edge, north to Highway 156, east on Highway 156 to Highway 1, south on Highway 1 to Highway 765, south on Highway 765 to Highway 763, south on Highway 763 to the Rio Guavate, west along Rio Guavate to Highway 1, southwest on Highway 1 to Highway 14, west on Highway 14 to Highway 729, north on Highway 729 to Cidra Municipality boundary to the point of beginning.

BILLING CODE 4310–55–F

FINAL REGULATORY ALTERNATIVES FOR DUCK HUNTING DURING THE 1996-97 SEASON

	ATLANTIC FLYWAY			MISSISSIPPI FLYWAY			CENTRAL FLYWAY (a)			PACIFIC FLYWAY (b)(c)		
	RES	MOD	LIB	RES	MOD	LIB	RES	MOD	LIB	RES	MOD	LIB
Begining Shooting Time	1/2 hr. before sunrise	1/2 hr. before sunrise	1/2 hr. before sunrise	1/2 hr. before sunrise	1/2 hr. before sunrise	1/2 hr. before sunrise	1/2 hr. before sunrise	1/2 hr. before sunrise	1/2 hr. before sunrise	1/2 hr. before sunrise	1/2 hr. before sunrise	1/2 hr. before sunrise
Ending Shooting Time	Sunset	Sunset	Sunset	Sunset	Sunset	Sunset	Sunset	Sunset	Sunset	Sunset	Sunset	Sunset
Opening Date	OCT 1	OCT 1	OCT 1	SEP 28	SEP 28	SEP 28	SEP 28	SEP 28	SEP 28	SEP 28	SEP 28	SEP 28
Closing Date	JAN 20	JAN 20	JAN 20	JAN 19	JAN 19	JAN 19	JAN 19	JAN 19	JAN 19	JAN 19	JAN 19	JAN 19
Season Length	30	40	50	30	40	50	39	51	60	59	79	93
Daily Bag/ Possession	3 6	4 8	5 10	3 6	4 8	5 10	3 6	4 8	5 10	4 8	5 10	7 14
Species/Sex Limits within the Overall Daily Bag Limit												
Mallard (Total/Female)	3/1	4/1	5/1	2/1	3/1	4/1	3/1	4/1	5/1	3/1	4/1	7/1
Pintail	1	1	1	1	1	1	1	1	1	1	2	2
Black Duck	1	1	1	1	1	1	--	--	--	--	--	--
H. Merganser	1	1	1	1	1	1	1	1	1	--	--	--
Canvasback	<----PENDING REVIEW OF POPULATION, HABITAT, AND HARVEST DATA---->											
Redhead	2	2	2	1	1	2	1	1	2	2	2	2
Wood Duck	2	2	2	2	2	2	2	2	2	--	--	--
Whistling Ducks	1	1	1	--	--	--	--	--	--	--	--	--
Harlequin	Closed	Closed	Closed	--	--	--	--	--	--	--	--	--
Mottled Duck	1	1	1	3	3	3	1	1	1	--	--	--

(a) In the High Plains Mallard Management Unit, all regulations would be the same as the remainder of the Central Flyway with the exception of season length. Under the restrictive package, the number of additional days would be 12, 16 for the moderate package and 23 for the liberal package. Under all options, additional days must be on or after the Saturday nearest December 10.

(b) In the Columbia Basin Mallard Management Unit, all regulations would be the same as the remainder of the Pacific Flyway with the exception of season length. Under all options, an additional 7 days would be allowed.

(c) In Alaska, framework dates, bag limits, and season length would be different than the remainder of the Pacific Flyway. The bag limit would be 5-7 under the restrictive option and 8-10 for the moderate and liberal packages. There would be no restrictions on pintails and canvasback limits will follow those for the remainder of the Pacific Flyway. Under all options, season length would be 107 days and framework dates would be Sep 1 - Jan 26.

[FR Doc. 96–18430 Filed 7–19–96; 8:45 am]

BILLING CODE 4310–55–C

federal register

Monday
July 22, 1996

Part V

Department of Housing and Urban Development

24 CFR Part 941

Office of the Assistant Secretary for Public and Indian Housing; Regulatory Reinvention: Streamlining the Public Housing Development Regulations; Interim Rule

DEPARTMENT OF HOUSING AND URBAN DEVELOPMENT

24 CFR Part 941

[Docket No. FR–3569–I–01]

RIN 2577–AB37

Office of the Assistant Secretary for Public and Indian Housing; Regulatory Reinvention: Streamlining the Public Housing; Development Regulations

AGENCY: Office of the Assistant Secretary for Public and Indian Housing, HUD.

ACTION: Interim rule.

SUMMARY: This rule amends HUD's regulations for the Public Housing Development program. In an effort to comply with the President's regulatory reform initiatives, this rule streamlines these regulations by eliminating provisions that repeat statutory provisions or are otherwise unnecessary, as well as revising provisions to allow greater flexibility to PHAs in carrying out development programs, allowing them to certify compliance with some requirements. This interim rule will make the Public Housing Development regulations clearer and more concise.

DATES: Effective Date: August 21, 1996, except that §§ 941.101, 941.205, 941.301, 941.303, 941.304, and 941.404 shall not become effective until the OMB approval of the information collections contained in those sections are announced by a separate publication in the Federal Register.

Comments due date: September 20, 1996.

ADDRESSES: Interested persons are invited to submit comments regarding this interim rule to the Rules Docket Clerk, Office of General Counsel, Room 10278, Department of Housing and Urban Development, 451 Seventh Street, S.W., Washington, D.C. 20410. Communications should refer to the above docket number and title. A copy of each communication submitted will be available for public inspection and copying between 7:30 a.m. and 5:30 p.m. weekdays at the above address. FAXED comments will not be accepted.

FOR FURTHER INFORMATION CONTACT: William J. Flood, Director, Office of Capital Improvements, Department of Housing and Urban Development, 451 Seventh Street, SW., Washington, DC 20410, telephone number (202) 708–1640 (this is not a toll-free number). For hearing-and speech-impaired persons, this number may be accessed via text telephone by dialing the Federal Information Relay Service at 1–800–877–8339.

SUPPLEMENTARY INFORMATION:

Information Collection Requirements

The information collection requirements contained in this rule, as described in § 941.101, are the subject of OMB control numbers 2577–0024, 2577–0033, 2577–0036, and 2577–0039. All of these approval numbers are currently under review, under the Paperwork Reduction Act of 1995 (42 U.S.C. 3501–3520), except for 2577–0036, for which a 90-day extension was granted, effective through 8/31/96. The information collection notices for these requirements were published on April 4, 1996 (61 FR 15081 and 15101) and on May 9, 1996 (61 FR 21202).

In accordance with the Paperwork Reduction Act, an agency may not conduct or sponsor, and a person is not required to respond to, a collection of information unless the collection displays a valid control number.

I. Background

On March 4, 1995, President Clinton issued a memorandum to all Federal departments and agencies regarding regulatory reinvention. In response to this memorandum, the Department of Housing and Urban Development conducted a page-by-page review of its regulations to determine which can be eliminated, consolidated, or otherwise improved. HUD has determined that the regulations for the public housing development program can be improved and streamlined by eliminating unnecessary provisions.

Although current funding for public housing development is limited, the regulations for the program are still needed to govern the current pipeline of projects for which funds have been obligated. In addition, current legislation allows modernization funds to be used for developing new units, which requires public housing development regulations for implementation.

Several provisions in the regulations repeat statutory language from the U.S. Housing Act of 1937. It is unnecessary to maintain statutory requirements in the Code of Federal Regulations (CFR), since those requirements are otherwise fully accessible and binding. Furthermore, if regulations contain statutory language, HUD must amend the regulations whenever Congress amends the statute. Therefore, this interim rule removes repetitious statutory language and replaces it with a citation to the specific statutory section for easy reference.

Several other provisions in the regulations apply to more than one program, and these provisions have been in different subparts. This repetition is unnecessary, and updating these scattered provisions is cumbersome and often creates confusion. Therefore, this interim rule consolidates these duplicative provisions, maintaining appropriate cross-references for the reader's convenience.

Some provisions in the regulations are now obsolete and have been removed. Lastly, some provisions in the regulations are not regulatory requirements. For example, several sections in the regulations contain nonbinding guidance or explanations. While this information is very helpful to recipients, HUD will more appropriately provide this information through guidance or other materials rather than maintain it in the CFR.

The major changes to the rule were made in order to further the Department's determination that newly developed public housing units should be attractive and marketable and should assist PHAs to end the social and economic isolation of low income people and to promote economic independence.

II. Specific changes

A. Expansion of Development Methods

Language that has limited development methods to the conventional, turnkey, and acquisition methods is being removed, and PHAs are being authorized to use any generally accepted method of development.

Two methods described, in addition to the three authorized in the current regulation, are the force account method and the mixed-finance method (see new § 941.102). With respect to a PHA that proposes to develop public housing units using the force account method, the rule specifies that HUD must determine, before development of a full proposal, that the PHA has the capability to develop successfully the public housing units using the force account method. A PHA using the mixed-finance method must submit and implement its proposal in accordance with subpart F of this part, which deals only with that development method. This expansion of development methods gives more flexibility to PHAs in the development of public housing units.

B. Expansion of Funding Sources

This rule adds reference to the use of modernization funds as a new funding

source for development, under certain circumstances (see new § 941.102(b)). A provision is also added requiring execution of an Annual Contributions Contract to govern the use of federal funds used, including modernization funds (see new § 941.302). Donations are also specifically referenced as a possible funding source for PHA public housing development.

C. Flexibility for Approval of Replacement Housing Sites

This rule (at new § 941.202(c)(2)) specifically authorizes construction of public housing units following demolition of public housing units, on the original site or in the same neighborhood, exempting such construction from the review concerning minority or poverty concentration (that otherwise would be required by § 941.202(c)) if one of several criteria are satisfied:

(1) The number of public housing units to be constructed is no more than 50 percent of the number of units in the original project;

(2) In the case of replacement of a currently occupied project, the number of public housing units being constructed is the minimum number needed to house current residents who want to remain at the site; or

(3) The public housing units being constructed constitute no more than twenty-five units.

The Department believes that addition of these first two criteria is desirable to permit the demolition and reconstruction of replacement units on sites that are readily available, but at lower density levels than the original project. That policy has been endorsed by language in the Fiscal Year 1995 Rescission Act, Pub. L. No. 104–19, 104 Stat. 194, approved July 27, 1995. The inclusion of the third criterion will permit replacement on site where the number of units being demolished is itself small, in which case the Department would not expect that replacement of twenty-five of the units would have an effect of concentrating low-income or minority families in the area.

D. Site Acquisition Requirements

This rule eliminates the ''limited proposal'' (under existing § 941.404(n)), which has been used by PHAs as an expedited means of acquiring HUD/VA/RTC and certain other scattered site properties. The Department believes that its adoption in this rulemaking of a streamlined procedure for the development of *all* public housing (and not just certain types of housing), renders obsolete the separate limited proposal procedure. HUD also has added a new, optional provision, at § 941.303, that authorizes a PHA to acquire land on which to construct a project following submission and approval of an abbreviated ''site acquisition'' proposal. However, HUD must approve all contracts for the purchase of property, regardless of the amount involved or the development method being used.

E. PHA Certifications

PHAs with a satisfactory record of performance are permitted to certify compliance with certain HUD requirements under this rule, in order to reduce the amount of HUD review required (see new § 941.402). For example, a PHA is permitted to certify that the design and construction plans are in accordance with HUD's design and construction standards, and that the bidding procedures are in accordance with Federal procurement requirements.

F. Consolidation of Application and Proposal Provisions

The provisions of Subparts C and D concerning applications and proposals are consolidated into a new Subpart C. Detail in the current regulations on selection of applications is removed, substituting a reference to publication of information pertaining to fund allocation, application deadlines, selection criteria and procedures through publication of a Notice of Funding Availability, should new funding become available (see new §§ 941.301 through 941.306). [Subpart E on project development is consequently redesignated as Subpart D.]

The information sought from HAs concerning costs at the proposal stage is being modified to request that information about demolition and associated relocation costs be separately identified with respect to a site that is being acquired for public housing and a site of existing public housing. This will allow HUD to make appropriate comparisons with private market development costs.

G. HUD Review of Performance

A new process for HUD review of PHA performance and sanctions for poor performance is added (see new § 941.501), which parallels that being used in the Modernization Program. These new provisions place the emphasis on isolating poor performance and providing technical assistance where it is needed as the initial HUD response. The rule gives HUD authority to establish certain review thresholds through notice of deficiency or corrective action order procedures.

H. Subpart F

Subpart F, which was first authorized in an interim rule published on May 2, 1996 (61 FR 19708) specifies the conditions and procedures for the mixed-finance development method. Since this rule revises many of the sections to which § 941.602 of that rule referred, this rule revises those cross-references. In addition, the Department anticipates making additional changes in subpart F to streamline its provisions further. That action may be taken in a combined final rule issued to conclude the rulemaking initiated by both that interim rule and this interim rule.

III. Justification for Interim Rulemaking

HUD generally publishes a rule for public comment before issuing a rule for effect, in accordance with its own regulations on rulemaking in 24 CFR part 10. However, part 10 provides for exceptions to the general rule if the agency finds good cause to omit advance notice and public participation. The good cause requirement is satisfied when prior public procedure is ''impracticable, unnecessary, or contrary to the public interest'' (24 CFR 10.1). HUD finds that good cause exists to publish this rule for effect without first soliciting public comment. HUD believes that it would be contrary to the public interest to delay the effectiveness of the rule to solicit comment, since it will streamline numerous existing HUD requirements and delegate significant responsibility to PHAs with respect to implementation of their development programs.

Delegation of responsibility to PHAs is fully consistent with the policy and objectives of the United States Housing Act of 1937, as set forth in section 2 of that Act, which states in relevant part: ''It is the policy of the United States * * * to assist the several States and their political subdivisions * * * to remedy the acute shortage of decent, safe, and sanitary dwellings for families of lower income and, consistent with the objectives of this Act, to vest in local public housing agencies the maximum amount of responsibility in the administration of their housing programs * * *.'' The streamlining changes to the development program are designed primarily to eliminate multiple layers of HUD reviews for those PHAs that HUD believes can develop public housing units without the need for detailed HUD oversight. Troubled PHAs and other PHAs that HUD believes would benefit from more detailed oversight would remain subject to existing HUD review and approval

requirements for their development programs.

By revising the program, in this matter, HUD believes that competent PHAs will be able to more expeditiously develop public housing units and, accordingly, to more efficiently respond to the housing needs of low income families in their jurisdictions. Troubled PHAs and other PHAs that may benefit from more detailed HUD oversight will continue to be subject to existing HUD review and approval requirements for their development programs. HUD believes that this dichotomy in the development process will significantly benefit low-income families.

Although issuing the rule for effect, HUD is soliciting public comment concerning these changes, and the comments will be reviewed for possible future changes to the rule in a final version.

IV. Other Matters

Regulatory Flexibility Act

The Secretary, in accordance with the Regulatory Flexibility Act (5 U.S.C. 605(b)), has reviewed and approved this interim rule, and in so doing certifies that this rule will not have a significant economic impact on a substantial number of small entities. HUD believes that this rule will further the public interest since the rule will streamline numerous existing HUD requirements and delegate significant responsibility to PHAs with respect to implementation of their development programs.

Environmental Impact

A Finding of No Significant Impact with respect to the environment was made in accordance with HUD regulations in 24 CFR part 50 that implement section 102(2)(C) of the National Environmental Policy Act of 1969 (42 U.S.C. 4332). This Finding is available for public inspection between 7:30 a.m. and 5:30 p.m. weekdays in the Office of the Rules Docket Clerk, Office of General Counsel, Room 10276, Department of Housing and Urban Development, 451 Seventh Street, SW, Washington, DC.

Executive Order 12612, Federalism

The General Counsel, as the Designated Official under section 6(a) of Executive Order 12612, *Federalism*, has determined that this rule will not have substantial direct effects on States or their political subdivisions, or the relationship between the Federal government and the States, or on the distribution of power and responsibilities among the various levels of government. To the extent that the programmatic changes that will result from this rule will have any effect, they will positively affect the relationship between the Federal Government and State and local governments in that the rule delegates to the PHA (a creature of state law) greater responsibility with respect to implementation of its development program.

Executive Order 12606, The Family

The General Counsel, as the Designated Official under Executive Order 12606, *The Family*, has determined that this rule will not have the potential for significant impact on family formation, maintenance, or general well-being, and thus is not subject to review under the Order. The only effect that the rule is likely to have on families is that it may expedite replacement of public housing units that cannot be maintained as decent, safe, and sanitary housing.

Regulatory Review

This interim rule was reviewed by the Office of Management and Budget under Executive Order 12866 as a significant regulatory action. Any changes made in this interim rule as a result of that review are clearly identified in the docket file for this interim rule, which is available for public inspection in the HUD's Office of the Rules Docket Clerk, Room 10276, 451 Seventh Street, SW., Washington, DC 20410–0500.

List of Subjects in 24 CFR Part 941

Grant programs—housing and community development, Loan programs—housing and community development, Public housing.

Catalog

The Catalog of Federal Domestic Assistance number for the program affected by this rule is 14.850.

Accordingly, 24 CFR part 941 is amended as follows:

PART 941—PUBLIC HOUSING DEVELOPMENT

1. The authority citation for part 941 continues to read as follows:

Authority: 42 U.S.C. 1437b, 1437c, 1437g, and 3535(d).

2. Sections 941.101 and 941.102 are revised to read as follows:

§ 941.101 Purpose and scope.

(a) *Purpose.* The U.S. Housing Act of 1937 (Act), 42 U.S.C. 1437, authorizes HUD to assist public housing agencies (PHAs) with the development and operation of low-income housing projects and financial assistance in the form of grants (42 U.S.C. 1437c, 1437g, and 1437l). The purpose of the program is to develop units which serve the needs of public housing residents over the long term and have the lowest possible life cycle costs, taking into account future operating and replacement costs, as well as original capital investments.

(b) *Scope.* This part is the regulation under which a PHA develops low-income housing (excluding Indian housing), herein called public housing.

(c) *Approved information collections.* The following sections of this part have been approved by the Office of Management and Budget in accordance with the Paperwork Reduction Act of 1995 (42 U.S.C. 3501–3520) and assigned the OMB approval numbers indicated:

Approval No.	Sections
2577–0024	941.304(j).
2577–0033	941.301, 941.303, 941.304 except para. (j), 941.402, 941.606, 941.610.
2577–0036	941.304, except para. (j).
2577–0039	941.205, 941.404.

§ 941.102 Development methods and funding.

(a) *Methods.* A PHA may use any generally accepted method of development including, but not limited to, conventional, turnkey, acquisition with or without rehabilitation, mixed-finance, and force account.

(1) *Conventional.* Under this method, the PHA is responsible for selecting a site or property and designing the project. The PHA advertises for competitive bids to build or rehabilitate the development on the PHA-owned site. The PHA awards a construction contract in accordance with 24 CFR part 85. The contractor receives progress payments from the PHA during construction or rehabilitation and a final payment upon completion of the project in accordance with the construction contract. The conventional method may be used for either new construction or rehabilitation.

(2) *Turnkey.* The turnkey method involves the advertisement and selection of a turnkey developer by the PHA, based on the best housing package for a site or property owned or to be purchased by the developer. Following HUD approval of the PHA's full proposal, the developer prepares the design and construction documents. The PHA and the developer execute the contract of sale to implement the PHA's full proposal. The developer is responsible for providing a completed

housing project, which includes obtaining construction financing. Upon completion of project construction or rehabilitation in accordance with the contract of sale, the PHA purchases the development from the developer. This method may be used for either new construction or rehabilitation.

(3) *Acquisition.* The acquisition method involves a purchase of existing property that requires little or no repair work. Any needed repair work is completed after acquisition, either by the PHA contracting to have the work done or by having the staff of the PHA perform the work.

(4) *Mixed-finance.* This method involves financing from both public and private sources and may involve ownership of the public housing units by an entity other than the PHA. This method of development may be carried out by a PHA only in accordance with the requirements set forth in subpart F.

(5) *Force account.* The force account method involves use of PHA staff to carry out new construction or rehabilitation. A PHA may only develop a full proposal based on the force account method if HUD has determined that the PHA has the capability to develop successfully the public housing units using this method.

(b) *Funding.* A PHA may develop public housing with:

(1) Development funds reserved by HUD for that purpose;

(2) Modernization funds under section 14 of the Act (42 U.S.C. 1437l), to the extent authorized by law and under procedures approved by HUD; and/or

(3) Funds available to it from any other source, consistent with § 941.306(c), or as may be otherwise approved by HUD.

(c) *Limit on number of units.* (1) *General.* A PHA may not develop public housing pursuant to this part beyond the lesser of the number of units that the PHA had under ACC on August 21, 1996, or the number of units for which it was receiving operating subsidy on that date, unless authorized by HUD. HUD may condition such authorization on the PHA's agreement that such incremental units, once developed, will be ineligible for capital and/or operating subsidies from HUD.

(2) *Replacement housing units.* With respect to units constructed to replace public housing units that were demolished or disposed of, a PHA may use (in whole or in part) funding from non-HUD sources or from HUD funding not provided under the Act. However, development of such units must be approved by HUD in advance for them to be eligible for inclusion under the ACC.

3. Section 941.103 is amended as follows:

a. By removing the definitions of ''*Allocation area*'', ''*Application*'', ''*Central city allocation area*'', ''*Community*'', ''*Field Office*'', ''*Housing Assistance Plan*'', ''*Household type*'', and ''*Housing type*''.

b. By removing the parenthetical phrase ''(in the form prescribed by HUD)'' from the definitions of ''*Construction Contract*'' and ''*Contract of sale*'';

c. By revising the definition of ''*Proposal*'' to read as set forth below; and

d. By removing from the definition of ''*Total development cost (TDC)*'' the term ''the Field Office'' and adding in its place the term ''HUD'', and by removing from that definition the parenthetical sentence at the end ''(See 24 CFR 941.204)''.

§ 941.103 Definitions.

* * * * *

Proposal. A document submitted by a PHA to HUD, in accordance with subpart C of this part, for approval of the development of a public housing project. As used in this part, ''proposal'' refers to both the ''site acquisition proposal'' (§ 941.303), and the ''full proposal'' (§ 941.304), unless specifically indicated otherwise.

* * * * *

4. Section 941.201 is amended as follows:

a. By removing from paragraph (a) the term ''The field office'' and adding in its place the term ''HUD'';

b. By redesignating paragraph (c) as paragraph (d); and

c. By adding a new paragraph (c), to read as follows:

§ 941.201 PHA eligibility.

* * * * *

(c) *Troubled PHAs.* Unless HUD determines that a PHA that has been classified as troubled or modernization-troubled, in accordance with 24 CFR part 901, has adequate capacity to develop public housing units, the PHA so classified shall engage a HUD-approved program manager to develop and implement the PHA's proposal. HUD shall review the solicitation and the selection before award of a contract is made by such a PHA.

* * * * *

5. Section 941.202 is amended:

a. By redesignating paragraphs (c)(1) introductory text, (c)(1)(i), (c)(1)(ii), and (c)(2), as paragraphs (c)(1)(i) introductory text, (c)(1)(i)(A), (c)(1)(i)(B), and (c)(1)(ii), respectively;

b. By redesignating the introductory text of paragraph (c) as the introductory text of paragraph (c)(1);

c. By adding a new paragraph (c)(2) to read as set forth below;

d. Removing paragraph (c)(3); and

e. In paragraph (f), by removing the phrase ''local housing assistance plan approved by the field office'' and adding in its place the phrase ''local plan approved by HUD''.

§ 941.202 Site and neighborhood standards.

* * * * *

(c) * * *

(2) Notwithstanding any other provision of this paragraph (c), public housing units constructed after demolition of public housing units may be built on the original public housing site, or in the same neighborhood, if one of the following criteria is satisfied:

(i) The number of public housing units being constructed is no more than 50 percent of the number of units in the original project;

(ii) In the case of replacement of a currently occupied project, the number of public housing units being constructed is the minimum number needed to house current residents who want to remain at the site; or

(iii) The public housing units being constructed constitute no more than twenty-five units.

* * * * *

6. Section 941.203 is revised to read as follows:

§ 941.203 Design and construction standards.

(a) Physical structures shall be designed, constructed and equipped so as to improve or harmonize with the neighborhoods they occupy, meet contemporary standards of modest comfort and liveability, promote security, and be attractive and marketable to the people they are intended to serve. Building design and construction shall strive to encourage in residents a proprietary sense, whether or not homeownership is intended or contemplated.

(b) Projects must comply with:

(1) A national building code, such as Uniform Building Code, Council of American Building Officials Code, or Building Officials Conference of America Code;

(2) Applicable State and local laws, codes, ordinances, and regulations; and

(3) Other Federal requirements, including any Federal fire-safety requirements and HUD minimum property standards (e.g., 24 CFR part 200, subpart S, and § 941.208).

(c) Projects for families with children shall consist to the maximum extent

practicable of low-density housing (e.g., non-elevator structures, scattered sites or other types of low-density developments appropriate in the community).

(d) High-rise elevator structures shall not be provided for families with children regardless of density, unless the PHA demonstrates and HUD determines that there is no practical alternative. High-rise buildings for the elderly may be used if the PHA demonstrates and HUD determines that such construction is appropriate, taking into consideration land costs, the safety and security of the prospective occupants, and the availability of community services.

§ 941.204 [Removed]

7. Section 941.204 is removed.

8. Section 941.205 is revised to read as follows:

§ 941.205 PHA contracts.

(a) *ACC requirements*. In order to be considered as eligible project expenses, all development related contracts entered into by the PHA shall provide for compliance with the provisions of the ACC.

(b) *Contract forms*. HUD may prescribe the form of any development related contracts, and the PHA shall use such forms. If a form is not prescribed, the PHA may develop its own form; however, it must contain all applicable federal requirements.

(c) *When HUD approval is required*. The PHA is authorized to execute all development-related contracts without prior HUD review or approval with the exception of:

(1) All forms of site or property acquisition contracts regardless of development method; and

(2) Contracts whose amount exceeds a contract approval threshold established by HUD for that PHA; and

(3) A contract for the selection of a program manager to develop and implement the PHA's proposal (see § 941.201(c)).

(d) Each PHA shall certify before executing any contract with a contractor that the contractor is not suspended, debarred, or otherwise ineligible under 24 CFR part 24. The PHA also shall ensure that all subgrantees, contractors, and subcontractors select only contractors who are not listed as suspended, debarred, or otherwise ineligible under 24 CFR part 24.

§ 941.206 [Removed]

9. Section 941.206 is removed.

10. Section 941.208 is revised to read as follows:

§ 941.208 Other Federal requirements.

(a) *General*. The PHA shall be subject to all statutory, regulatory, and executive order requirements applicable to public housing development (see, e.g., 24 CFR parts 5, 8, 35, 50, and 965), as may be more fully described by HUD in notices, handbooks, or other guidance.

(b) *Lead-based paint*. In addition to the applicable requirements of 24 CFR part 35, all existing properties constructed prior to 1978 and proposed to be acquired for family projects under this part shall be tested for lead-based paint on applicable surfaces, as defined in 24 CFR part 965. If lead based paint is found, the cost of testing and abatement shall be considered when justifying new construction or meeting maximum total development cost limitations. For any units containing lead-based paint, compliance with 24 CFR part 965, subpart H, is required, and abatement shall be completed prior to occupancy.

11. Subpart C is revised to read as follows:

Subpart C—Application and Proposal

Sec.
941.301 Application.
941.302 Annual contributions contract; drawdowns and advances.
941.303 Site acquisition proposal.
941.304 Full proposal content.
941.305 Technical processing and approval.
941.306 Maximum development cost.

Subpart C—Application and Proposal

§ 941.301 Application.

If funding is made available for public housing development, HUD will provide information about fund allocation, application deadline, and selection criteria and procedures through a Notice of Funding Availability (NOFA).

§ 941.302 Annual contributions contract; drawdowns and advances.

(a) A PHA wishing to develop public housing shall execute an ACC or ACC amendment covering the entire amount of reserved development funds or the amount of modernization funds (under section 14 of the Act, 42 U.S.C. 1437l) it proposes to use in accordance with this part. This ACC or ACC amendment must be executed by both the PHA and HUD before funds can be provided to the PHA.

(b) Until HUD has approved a PHA's full proposal, a PHA may only draw down funds under the ACC for pre-development costs for materials and services related to proposal preparation and submission. Expenditures for pre-development costs shall not exceed three percent of the total development cost stated in the executed ACC.

(c) HUD may approve the following in writing:

(1) Amounts in excess of three percent of TDC for pre-development costs; and/or

(2) Drawdown of funds to enable a PHA to acquire a site after approval by HUD of the PHA's site acquisition proposal, in accordance with § 941.303.

(d) After HUD approval of the full proposal, the PHA may draw down additional funds under the ACC to develop the public housing units in accordance with the approved full proposal.

§ 941.303 Site acquisition proposal.

When a PHA determines that it is necessary to acquire land for development through new construction, it may spend funds authorized under this part to acquire development sites. HUD must approve a PHA's proposed use of funds before it may acquire sites in this manner. A PHA must submit the following documents for HUD review and approval, in accordance with the standards set forth in § 941.305:

(a) *Justification*. A justification for acquiring land prior to PHA proposal approval;

(b) *Site information*. An identification and description of the proposed site, site plan, neighborhood, and evidence of PHA control of the site for at least sixty (60) days after proposal submission.

(c) *Zoning*. Evidence that construction or rehabilitation is permitted by current zoning ordinances or regulations or evidence to indicate that needed rezoning is likely and will not delay the project.

(d) *Development schedule*. A copy of the PHA development schedule, including the PHA architect estimates of the time required to complete each major development stage.

(e) *Environmental assessment*. All available environmental information on the proposed development (to expedite the HUD environmental review).

(f) *Appraisal*. An appraisal of the proposed site by an independent, state-certified appraiser.

§ 941.304 Full proposal content.

Each full proposal shall include at a minimum the following:

(a) *Project description*. A description of the housing, including the number of units, schematic drawings of the proposed building and unit plans, outline specifications or rehabilitation work write-ups, and the types and amounts of non-dwelling space to be provided;

(b) *Description of development method.* A description of the PHA's proposed development method, and a demonstration by the PHA that it will be able to use this method successfully to develop the public housing units. If the PHA proposes to use the turnkey method, it must submit a Board-approved certification that the developer was selected as the result of a public solicitation for proposals and that the selection was based on an objective rating system, using such factors as site location, project design, price, and developer experience. If the PHA proposes to use the acquisition method, the PHA must submit a certification by the PHA and owner that the property was not constructed with the intent that it would be sold to the PHA. If the PHA proposes to use the mixed-finance method, it should have consulted with HUD on its plans. If the PHA proposes to use the force account method to develop the public housing units, it must have already received approval from HUD of its capability to carry out the development successfully in this manner;

(c) *Site information.* An identification and description of the proposed site, site plan, neighborhood, and evidence of PHA or turnkey developer control of the site for at least sixty (60) days after proposal submission;

(d) *Project costs.* (1) *Categories of cost.* The detailed budget of the costs of developing the project, in accordance with the form prescribed by HUD. With respect to costs of demolition and relocation, the description must distinguish between costs related to existing public housing property and costs related to acquisition of a new public housing site;

(2) *Budget and payment schedule.* A budget that identifies the sources of funding for relocation benefits, and a payment schedule anticipated to be provided under a construction contract;

(e) *Appraisal.* An appraisal of the proposed site or property by an independent, state-certified appraiser;

(f) *Financial feasibility.* Identification of funds sufficient to complete the development, including a reasonable contingency;

(g) *Zoning.* Evidence that construction or rehabilitation is permitted by current zoning ordinances or regulations or evidence to indicate that needed rezoning is likely and will not delay the project;

(h) *Facilities.* A statement addressing the adequacy of existing facilities and services for the prospective occupants of the project, a description of public improvements needed to ensure the viability of the proposed project with a description of the sources of funds available to carry out such improvements, and, if applicable, a statement addressing the minority enrollment and capacity of the school system to absorb the number of school-aged children expected to reside in the project;

(i) *Relocation.* A certification by the PHA that it will comply with all applicable Federal relocation requirements;

(j) *Life-cycle analysis.* For new construction and substantial rehabilitation, the criteria to be used in equipping the proposed project(s) with heating and cooling systems, and which shall include a life-cycle cost analysis of the installation, maintenance and operating costs of such systems pursuant to section 13 of the Act (42 U.S.C. 1437k);

(k) *Project development schedule.* A copy of the PHA development schedule, including the PHA architect or turnkey developer estimates of the time required to complete each major development stage;

(l) *Environmental assessment.* All available environmental information on the proposed development (to expedite the HUD environmental review);

(m) *Occupancy and operation policies.* Statement of all PHA policies and practices that will be used in occupancy and operation that contribute to an overall objective of ending the social and economic isolation of low income people and promoting their economic independence;

(n) *New construction certification.* If a PHA's proposal involves new construction, evidence of compliance with section 6(h) of the Act in one of the following two ways:

(1) Submission of a PHA comparison of the cost of new construction in the neighborhood where the PHA proposes to construct the housing and the cost of acquisition of existing housing (with or without rehabilitation) in the same neighborhood; or

(2) Certification by the PHA, accompanied by supporting documentation, that there is insufficient existing housing in the neighborhood to develop public housing through acquisition; and

(o) *Additional HUD-requested information.* Any additional information that may be needed for HUD to determine whether it can approve the proposal pursuant to § 941.305.

§ 941.305 Technical processing and approval.

(a) *Standards.* HUD shall review the full proposal, submitted in accordance with § 941.304, and the site acquisition proposal, submitted in accordance with § 941.303, to determine whether each proposal complies with all statutory, executive order, and regulatory requirements applicable to public housing development including, if applicable, the comments received as a result of Intergovernmental Review. In addition, HUD shall carry out any necessary statutory and executive order reviews with respect to the proposal under review. If HUD determines that the proposal under review is acceptable, it shall notify the PHA in writing and shall forward to it for execution an ACC (or ACC amendment). If the PHA already has executed an ACC (or ACC amendment) for the entire reserved amount, HUD shall notify the PHA that it is authorized to draw down funds in accordance with § 941.302.

(b) *Approved proposal.* Units developed under this part shall be developed only in accordance with an approved proposal.

(c) *Approved amendments.* Material changes in the approved proposal, including any increase in the budget or any change in the payment schedule, require an amendment to the proposal, which must be approved by HUD. The determination of what constitutes a material change will be made by HUD.

§ 941.306 Maximum development cost.

(a) *Limit on approved HUD funds to Total Development Cost.* No funds provided by HUD pursuant to the Act may be used to pay costs in excess of the TDC without the written approval of HUD. Approval of a higher project cost will only be given upon the following demonstration by the PHA:

(1) That the excess costs are reasonable and necessary to develop a modest non-luxury project consistent with the standards set forth in this part, providing for efficient project design, durability, energy conservation, safety, security, economical maintenance, and healthy family life in a neighborhood environment; and

(2) That the PHA has the funds available to pay for such excess costs.

(b) *Determination of maximum TDC.* HUD will determine the maximum total development cost (TDC) in accordance with section 6 of the Act. The maximum TDC for a development is calculated by multiplying the number of units for each bedroom size and structure type in the project times the applicable unit TDC limit for the bedroom size and structure type and adding the resulting amounts for all units in the project.

(c) *Donations.* Donations from other funding sources may be obtained by the PHA to supplement project costs which otherwise could not be included,

provided that the added funds are not used for items that would result in substantially increased operating, maintenance or replacement costs, and the HUD certification required under section 102 of the HUD Reform Act (42 U.S.C. 3545) can be made in accordance with 24 CFR part 12 (subpart D). Although donations are not subject to the TDC limitations set forth in paragraph (a) of this section, donations must be included in the project development cost budget, and legally acceptable written commitments for such donations must be provided by the PHA for HUD approval.

12. Subpart D is revised to read as follows:

Subpart D—Project Development

Sec.
941.401 Site and property acquisition.
941.402 Project design and construction.
941.403 Acceptance of work and contract settlement.
941.404 Completion of development.

Subpart D—Project Development

§ 941.401 Site and property acquisition.

(a) *Applicability.* The provisions of this section apply to projects being developed under the conventional, acquisition, and force account methods, and may apply to other development methods, as deemed appropriate by HUD.

(b) *Purchase agreement.* The purchase agreement shall reflect any conditions established by HUD, such as the site engineering studies that must be completed to determine whether the site is suitable for development of the project.

(c) *Title.*—(1) *General.* After HUD approves the site or property acquisition contract and notifies the PHA that it is authorized to take title, the PHA shall obtain title in accordance with the following certification. The PHA shall certify to HUD that it obtained a title insurance policy that guaranteed that the title was good and marketable before taking title and that it promptly recorded the deed and declaration of trust in the form prescribed by HUD.

(2) *Limitation.* After HUD notifies a PHA that has been determined to be troubled or modernization troubled in accordance with part 901 of this chapter, or a PHA that has for other reasons been notified in writing that it may not use the procedure specified in paragraph (c)(1) of this section, that the site or property acquisition contract has been approved, the PHA shall submit to HUD evidence that title to the site or property is good and marketable. If HUD approves the title evidence, it will inform the PHA that it is authorized to acquire title to the site or property. The PHA shall record promptly the deed and declaration of trust in the form prescribed by HUD, and HUD may require the PHA to submit evidence of such recordation.

§ 941.402 Project design and construction.

(a) *Compliance with HUD construction standards and Federal procurement requirements.*

(1) *General.* A PHA may certify that its proposed design and construction plans for the development are in accordance with HUD's design and construction standards at § 941.203, and that its bidding procedures are in accordance with Federal procurement requirements.

(2) *Limitation.* In the case of a PHA determined to be troubled or modernization troubled in accordance with part 901 of this chapter or a PHA that has for other reasons been notified in writing that it may not use the procedure specified in paragraph (a)(1) of this section, the PHA must submit the proposed design and construction plans and its bidding procedures (unless HUD notifies the PHA that it *may* use the certification procedure specified in paragraph (a)(1) of this section).

(b) *Contract administration.* The PHA shall be responsible for contract administration and shall contract for the services of an architect, or other person licensed under State law, to assist and advise the PHA in contract administration and inspections to assure that the work is done in accordance with HUD requirements. A HUD representative may periodically visit the project site to monitor PHA contract administration.

(c) *Prevailing wage rates.* See § 965.101 of this chapter.

§ 941.403 Acceptance of work and contract settlement.

(a) *Notification of completion.* The contractor or developer shall notify the PHA in writing when the contract work, including any approved off-site work, will be completed and ready for inspection.

(b) *Acceptance.* (1) *General.* A PHA may carry out the final inspection of the work and may accept the completed work. If, upon inspection, the PHA determines that the work is complete and satisfactory, except for work that is appropriate for delayed completion, the work shall be accepted by the PHA. The PHA shall certify to HUD before it pays the contractor or developer that it has inspected the work and determined that it is acceptable and in compliance with the construction contract or contract of sale and HUD requirements. The PHA shall determine any hold-back for items of delayed completion, and the amount due and payable for the work that has been accepted including any conditions precedent to payment that are stated in the construction contract or contract of sale. The contractor or developer shall be paid for items of delayed construction only after inspection and acceptance of this work by the PHA.

(2) *Limitation.* In the case of a PHA determined to be troubled or modernization troubled in accordance with part 901 of this chapter or a PHA that has for other reasons been notified in writing that it may not use the procedure specified in paragraph (b)(1) of this section, the procedure described in paragraph (b)(1) of this section will be followed, except that HUD must concur in the necessary PHA determinations and approvals.

(c) *Guarantees and warranties.* The construction contract or contract of sale shall specify the project guaranty period and amounts to be withheld and shall provide for assignment to the PHA of all manufacturer and supplier warranties required by the construction documents. The PHA shall inspect each dwelling unit and the overall project approximately three months after the beginning of the project guaranty period and three months before its expiration and also as may be necessary to exercise its rights before expiration of any warranties. The PHA shall require repair or replacement, prior to the expiration of the guaranty or warranty periods, of any defective items.

(d) *Title to turnkey projects.* (1) *General.* When the work has been inspected and accepted on a turnkey project, in accordance with paragraph (b) of this section, the PHA is authorized to take title to the completed project in accordance with the following certification. The PHA shall certify to HUD that it obtained a title insurance policy that guaranteed that the title was good and marketable before taking title and that it promptly recorded the deed and declaration of trust in the form prescribed by HUD.

(2) *Limitation.* After inspection and acceptance of the work in accordance with paragraph (b) of this section, a PHA that has been determined to be troubled or modernization troubled in accordance with part 901 of this chapter, or a PHA that has for other reasons been notified in writing that it may not use the procedure specified in paragraph (d)(1) of this section shall submit to HUD evidence that title to the completed project is good and marketable. If HUD approves the title evidence, it will inform the PHA that it

is authorized to acquire title to the completed project. The PHA shall record promptly the deed and declaration of trust in the form prescribed by HUD, and HUD may require submission of evidence of such recordation.

§ 941.404 Completion of development.

(a) When all development has been completed and paid for, but not later than 12 months after the end of the initial operating period unless a longer period is approved by HUD, the PHA shall submit a statement of the actual development cost. For this purpose, the initial operating period with respect to each project is the period commencing with the date of initiation of the project and ending with the earliest of the following three dates: the end of the calendar quarter in which ninety-five percent of the dwelling units in the project are occupied; the end of the calendar quarter that is six, seven, or eight months after the date of full availability of the project; or the end of the calendar quarter next preceding the date of physical completion of the project.

(b) HUD shall review the statement and establish the actual development cost of the project, which becomes the maximum total development cost for purposes of the ACC.

13. Subpart E is revised to read as follows:

Subpart E—Performance Review

§ 941.501 HUD review of PHA performance; sanctions.

(a) *HUD determination.* HUD shall carry out such reviews of the performance of each PHA as may be necessary or appropriate to make the determinations required by this paragraph (a), taking into consideration all available evidence.

(1) *Conformity with PHA proposal.* HUD shall determine whether the PHA has carried out its activities under this subpart in a timely manner and in accordance with its approved proposal.

(i) In making this determination, HUD shall review the PHA's performance under previous inspections, audit findings and other sources to determine whether the development activities undertaken during the period under review conform substantially to the activities specified in the approved PHA proposal. HUD also shall review a PHA's development schedule to determine whether the PHA has carried out its development activities in a timely manner;

(ii) HUD shall review a PHA's performance to determine whether the activities carried out comply with the requirements of the Act, and other applicable laws and regulations.

(2) *Continuing capacity.* HUD shall determine whether the PHA has a continuing capacity to carry out its development plan in a timely manner. The primary factors to be considered in arriving at a determination that a PHA has a continuing capacity are those described in paragraph (a)(1) of this section (''conformity with PHA proposal''). HUD shall give particular attention to PHA efforts to accelerate the progress of the program and to prevent the recurrence of past deficiencies or noncompliance with applicable laws and regulations.

(b) *Notice of deficiency.* Based on HUD reviews of PHA performance and findings of any of the deficiencies in paragraph (d) of this section, HUD may issue to the PHA a notice of deficiency stating the specific program requirements that the PHA has violated and requesting the PHA to take any of the actions specified in paragraph (e) of this section.

(c) *Corrective action order.* (1) Based on HUD reviews of PHA performance and findings of any of the deficiencies in paragraph (d) of this section, HUD may issue to the PHA a corrective action order, whether or not a notice of deficiency has been issued previously with respect to the specific deficiency on which the corrective action order is based. HUD may order corrective action at any time by notifying the PHA of the specific program requirements that the PHA has violated, and specifying that any of the corrective actions listed in paragraph (e) of this section must be taken. HUD shall design corrective action to prevent a continuation of the deficiency, mitigate any adverse effects of the deficiency to the extent possible, or prevent a recurrence of the same or similar deficiencies;

(2) Before ordering corrective action, HUD shall notify the PHA and give it an opportunity to consult with HUD regarding the proposed action;

(3) Any corrective action ordered by HUD shall become a condition of the grant agreement (ACC);

(d) *Basis for corrective action.* HUD may order a PHA to take corrective action only if it determines:

(1) The PHA has not carried out its activities under the development program in a timely manner and in accordance with its approved proposal, or HUD requirements, as determined in paragraph (a)(l) of this section;

(2) The PHA does not have a continuing capacity to carry out its proposal in a timely manner or in accordance with its proposal or HUD requirements, as determined in paragraph (a)(2) of this section;

(3) The PHA has failed to repay HUD for amounts awarded under the development programs that were improperly expended;

(e) *Types of corrective action.* HUD may direct a PHA to take one or more of the following corrective actions:

(1) Submit additional information:

(i) Concerning the PHA's administrative, planning, budgeting, accounting, management, and evaluation functions to determine the cause for a PHA not meeting the standards in paragraphs (a)(1) or (a)(2) of this section;

(ii) Explaining any steps the PHA is taking to correct the deficiencies;

(iii) Documenting that PHA activities were not inconsistent with the PHA's proposal or other applicable laws, regulations or program requirements; and

(iv) Demonstrating that the PHA has a continuing capacity to carry out the proposal in a timely manner;

(2) Submit schedules for completing the work identified in its proposal and report periodically on its progress in meeting the schedules;

(3) Notwithstanding 24 CFR 941.205(c), 24 CFR 941.402(a) and 24 CFR 85.36(g), submit to HUD documents for prior approval, which may include, but are not limited to:

(i) Complete design, construction and bid documents (prior to soliciting bids);

(ii) Complete rehabilitation drawings/specifications or work write-ups;

(iii) Development budgets, including modifications;

(iv) Proposed award of contracts, including construction contracts, turnkey contracts of sale, letters of commitment, and contracts with the architect/engineer (prior to execution);

(4) Submit additional material in support of one or more of the statements, resolutions, and certifications submitted as part of the PHA proposal, or periodic performance report;

(5) Not incur financial obligations, or to suspend payments for one or more activities;

(6) Reimburse, from non-HUD sources, one or more program accounts for any amounts improperly expended;

(f) *Failure to take corrective action.* In cases where HUD has ordered corrective action and the PHA has failed to take the required actions within a reasonable time, as specified by HUD, HUD may take one or more of the following steps:

(1) Terminate future draw downs and/or advances to the PHA. In such case, the amount of advances made to the PHA shall be repaid by the PHA from

any funds or assets available for that purpose;

(2) Require alternative management of development functions by an entity other than the PHA;

(3) Cancel the fund reservation if the PHA fails to start (begin construction or rehabilitation), or complete (acquisition) within 30 months from the date of the fund reservation pursuant to section 5(k) of the Act;

(4) Recapture for good cause any grant amounts previously provided to a PHA, based upon a determination that the PHA has failed to comply with the requirements of the development program.

(g) *Right to appeal.* Before taking any of the actions described in paragraph (f) of this section, HUD shall notify the PHA and give it an opportunity, within a prescribed period of time, to present any arguments or additional facts and data concerning the proposed action.

14. Section 941.602(a) is revised to read as follows:

§ 941.602 Applicability of other requirements.

(a) *Relationship of this subpart to other requirements in 24 CFR part 941.* The requirements contained in this subpart apply only to the development of public housing units using mixed-finance development methods under this subpart and to the operation of public housing units that are owned, or that will be owned, by an owner entity under this subpart. Other requirements for the development of public housing, as set forth in subparts A through E of this part, shall not apply to the development of public housing units pursuant to this subpart, except as may be required by HUD. Applicable requirements include, but shall not be limited to, the following:

(1) Section 941.103 (''Definitions'') (definitions of the following terms only shall apply to this subpart: ''Annual Contributions Contract (ACC),'' ''cooperation agreement,'' ''design documents,'' ''reformulation,'' and ''Total Development Cost (TDC).''

(2) Section 941.201 (''PHA eligibility'') (except that specific requirements governing the cooperation agreement, as set forth in § 941.201(c), shall be determined in accordance with this subpart);

(3) Section 941.202 (''Site and neighborhood standards'');

(4) Section 941.203 (''Design and construction standards'');

(5) Section 941.205 (''PHA contracts'') (except that the reference to ''development related contracts entered into by the PHA'' shall be construed to mean ''development related contracts entered into by the PHA or the owner entity'');

(6) Section 941.207 (''Relocation and acquisition'');

(7) Section 941.208 (''Other Federal requirements'');

(8) Section 941.209 (''Audit'');

(9) Section 941.306 (''Maximum development cost'');

(10) Section 941.402 (''Project design and construction'');

(11) Section 941.403 (''Acceptance of work and contract settlement'');

(12) Section 941.404 (''Completion of development''); and

(13) Section 941.501 (''HUD review of PHA performance; sanctions'').

* * * * *

Dated: June 11, 1996.

Kevin Emanuel Marchman,

Acting Assistant Secretary for Public and Indian Housing.

[FR Doc. 96–18356 Filed 7–17–96; 3:59 pm]

BILLING CODE 4210–33–P

federal register

Monday
July 22, 1996

Part VI

Department of Housing and Urban Development

Office of the Assistant Secretary for Public and Indian Housing; Notice of Funding Availability (NOFA) for Public Housing Demolition, Site Revitalization, and Replacement Housing Grants (HOPE VI); Fiscal Year 1996; Proposed Information Collection for Public Comment; Notice

DEPARTMENT OF HOUSING AND URBAN DEVELOPMENT

[Docket No. FR–4076–N–01]

Office of the Assistant Secretary for Public and Indian Housing; Notice of Funding Availability (NOFA) for Public Housing Demolition, Site Revitalization, and Replacement Housing Grants (HOPE VI); Fiscal Year 1996; Notice of Proposed Information Collection for Public Comment

AGENCY: Office of the Assistant Secretary for Public and Indian Housing, HUD.

ACTION: Notice of funding availability (NOFA) for Fiscal Year (FY) 1996 and request for comments on information collection requirements.

SUMMARY: This NOFA announces the availability of approximately $480 million in funding for Public Housing Demolition, Site Revitalization, and Replacement Housing, hereafter referred to as the HOPE VI program, as provided in the Omnibus Consolidated Rescissions and Appropriations Act of 1996 (Pub. L. 104–134; approved April 26, 1996) (1996 Appropriations Act).

The 1996 Appropriations Act provided this funding as an evolutionary advance in the HOPE VI program, for the purpose of enabling the demolition of obsolete public housing developments or portions thereof, the revitalization (where appropriate) of sites (including remaining public housing units) on which such developments are located, replacement housing that will avoid or lessen concentrations of very low-income families, and Section 8 tenant-based assistance for the purpose of providing replacement housing and assisting tenants to be displaced by the demolition. The HOPE VI program will fund demolition, the capital costs of reconstruction, rehabilitation and other physical improvements, the provision of replacement housing, management improvements, resident self-sufficiency programs, and tenant-based assistance.

This NOFA contains information on eligible applicants, program requirements, evaluation factors, and application submission requirements. This NOFA also solicits public comments on the information collection requirements contained herein.

DATES: Applications must be received at HUD Headquarters and the Field Office on or before 4 p.m. eastern time on September 10, 1996. The application deadline for the original application delivered to HUD Headquarters is firm as to date and hour. Public housing agencies (PHAs) should take this into account and submit applications as early as possible to avoid the risk brought about by unanticipated delays or delivery-related problems. In particular, PHAs intending to mail applications must provide sufficient time to permit delivery on or before the deadline date. Acceptance by a post office or private mailer does not constitute delivery. HUD will disqualify and return to the applicant any application that it receives after the deadline date and time.

The deadline for comments on the information collection requirements is September 20, 1996.

ADDRESSES: An original of the completed application must be received at the HUD Headquarters Office, 451 Seventh Street, SW, Room 4138, Washington, DC 20410, Attention: Director, Office of Public Housing Investments. A copy of the completed application must also be received at the HUD Field Office. Applications may be hand-delivered or mailed. HUD will not accept facsimile (fax), COD, and postage due applications.

Interested persons are invited to submit comments regarding the proposed information collection requirements in this NOFA. Comments must refer to the NOFA for Public Housing Demolition, Site Revitalization, and Replacement Housing Grants (HOPE VI); Fiscal Year 1996 (FR 4076), and must be sent to the Reports Liaison Officer, Office of Public and Indian Housing, Department of Housing and Urban Development, Room 4255, 451 7th Street, SW, Washington, DC 20410.

FOR FURTHER INFORMATION CONTACT: Mr. Milan Ozdinec, Director, Office of Urban Revitalization, Department of Housing and Urban Development, 451 Seventh Street, SW, Room 4144, Washington, DC 20410; telephone (202) 401–8812 (this is not a toll free number). Hearing- or speech-impaired individuals may access this number via TTY by calling the Federal Information Relay Service at 1–800–877–TDDY, which is a toll-free number. The NOFA is also available on the HUD Home Page, at the World Wide Web at http:/www.hud.gov. HUD will also post frequently-asked questions and answers on the Home Page throughout the application preparation period.

SUPPLEMENTARY INFORMATION:

Table of Contents

I. Changes to, and Continuing Objectives of, the Hope VI Program
II. Substantive Description
A. Authority
B. Eligible Applicants
C. Requirement of Demolition of Obsolete Units
D. Fund Availability
E. Total Development Costs
F. Site and Neighborhood Standards
G. Eligible Activities and Costs
III. Threshold Requirements
IV. Application Evaluation Factors
A. Lessen Concentration of Low-Income Residents
B. Need for Demolition, Revitalization, or Replacement
C. Self-Sufficiency Programs
D. Positive Incentives and Tougher Expectations
E. Local and National Impact
F. Community and Partnerships
G. Need for Funding
H. Program Quality, Feasibility, and Sustainability
I. Capability
J. Resolution of Litigation
V. Application Submission Requirements
A. Statement of Objectives and Goals
B. Existing Conditions
C. Physical Description of Revitalization Plan
D. Applications for New Construction
E. Self-Sufficiency Component
F. Operation and Management Principles
G. Local and National Impact
H. Capability
I. Community and Partnerships
J. Resources
K. Program Financing and Sustainability
L. Resolution of Litigation
M. Required Certifications
N. Demolition/Disposition Application
VI. Application Processing and Grant Administration
A. Application Evaluation
B. Reduction in Requested Grant Amount
C. Corrections to Deficient Applications
D. Notification of Funding Decisions
E. Grant Agreement/ACC Amendment
VII. Applicability of Program Requirements
VIII. Applicability of Other Federal Requirements
IX. Other Matters

Changes to, and Continuing Objectives of, the HOPE VI Program

Congress intended for the HOPE VI appropriation in the Omnibus Consolidated Rescissions and Appropriations Act of 1996 (Pub. L. 104–134; approved April 26, 1996) (the 1996 Appropriations Act) to continue Congressional efforts to deal with obsolete and severely distressed public housing, previously funded under the name ''Urban Revitalization Demonstration'' or ''URD,'' and popularly referred to as ''HOPE VI.'' The 1996 Appropriations Act made significant changes to HOPE VI by, among other things, expanding eligibility to all PHAs, requiring demolition as an element, requiring certain selection criteria, and eliminating various restrictive features of previous URD legislation.

HUD includes these changes to the HOPE VI program in this NOFA. HUD

has also attempted to incorporate the lessons learned to date in HOPE VI so that program purposes will be achieved more rapidly and efficiently. HUD has retained the ''HOPE VI'' name in a period of legislative change in order to stress the underlying continuity of the program.

The elements of public housing transformation that have proven key to HOPE VI, and that HUD hopes to achieve with these new awards include:

A. Changing the physical shape of public housing. This includes tearing down the eyesores that are often identified with obsolete public housing and replacing them with homes that complement the surrounding neighborhoods and are attractive and marketable to the people they are intended to serve, meeting contemporary standards of modest comfort and liveability. HOPE VI funds should be used to create institutional and physical structures that serve the needs of public housing residents over the long term in a cost-effective manner.

B. Establishing positive incentives for resident self-sufficiency and comprehensive services that empower residents. Programs should be outcome-based, directed at residents moving up and out of public housing.

C. Enforcing tough expectations through strict occupancy and eviction rules, such as the ''One Strike and You're Out'' policy announced by President Clinton and supported in the Housing Opportunity Program Extension Act of 1996 (Pub. L. 104–120; approved March 28, 1996). The goal of these rules is to improve the quality of life for residents, create safer, family-friendly environments conducive to learning, and make areas around public housing more attractive to businesses that can create well-paying jobs.

D. Lessening concentrations of poverty by placing public housing in nonpoverty neighborhoods, or by promoting mixed-income communities where public housing once stood alone, thereby ending the social and economic isolation of public housing residents, increasing their access to quality municipal services such as schools, and increasing their access to job information and mentoring opportunities.

E. Forging partnerships with other agencies, local governments, nonprofit organizations, and private businesses to leverage support and resources, whether financial or in-kind.

II. Substantive Description

A. Authority

The funding made available under this NOFA is provided by the Omnibus Consolidated Rescissions and Appropriations Act of 1996 (Pub. L. 104–134; approved April 26, 1996) (the 1996 Appropriations Act).

B. Eligible Applicants

PHAs that own or operate public housing units are eligible to apply. Indian Housing Authorities are not included as eligible entities for this program in the 1996 Appropriations Act, and are therefore not eligible to apply.

C. Requirement of Demolition of Obsolete Units

Demolition is a required component of the HOPE VI program. Each PHA applicant must demolish at least one obsolete building at the targeted development. Applicants must attach a demolition/disposition application, in accordance with 24 CFR part 970, as Exhibit N of the HOPE VI application. If a demolition/disposition application for the targeted development has been previously submitted to HUD but has not yet been approved, the applicant must submit as Exhibit N a copy of the transmittal letter from the PHA to HUD. If a demolition/disposition application has been submitted and approved by HUD, but the demolition has not yet commenced, the applicant must submit as Exhibit N a copy of HUD's approval letter.

HUD recognizes that the application preparation period may be insufficient to receive a response from residents to the offer to purchase required by 24 CFR 970.13. Therefore, HUD will give PHA applicants selected for funding 30 additional days from the date of preliminary selection to submit the residents' response to the offer. If there is no extant resident organization at the targeted development at the time of application, the applicant will be required to follow the procedures required by 24 CFR 970.13(b).

Whether or not HUD approves the HOPE VI application, HUD will process all submitted demolition applications not previously approved. If HUD approves demolition, all consequences of an approval, such as those that affect receipt of modernization funds or operating subsidy, will apply to the subject units. HUD will provide notification of approval of the demolition application separately from the notification of selection for participation in the HOPE VI program.

Obsolete units are those that, because of physical condition, location, or other factors, are unusable for housing purposes, and no reasonable program of substantial physical modifications is feasible to return the units to useful life.

Physical indicators of obsolescence include structural deficiencies (e.g., settlement of earth below the building caused by inadequate structural fills, faulty structural design, or settlement of floors), substantial deterioration (e.g., severe termite damage or damage caused by extreme weather conditions), or other design or site problems (e.g., severe erosion or flooding).

Neighborhood indicators of obsolescence include physical deterioration of the neighborhood; change from residential to industrial or commercial development; or environmental conditions, as determined by a HUD environmental review in accordance with 24 CFR part 50, that jeopardize the suitability of the site or a portion of the site and its housing structures for residential use.

D. Fund Availability

This NOFA announces the availability of approximately $480 million in funding for Public Housing Demolition, Site Revitalization, and Replacement Housing, hereafter referred to as the HOPE VI program, as provided in the Omnibus Consolidated Rescissions and Appropriations Act of 1996 (Pub. L. 104–134; approved April 26, 1996) (1996 Appropriations Act). The 1996 Appropriations Act provided $480 million in funding for the HOPE VI Program. In order to meet its obligations under the *Gautreaux* Consent Decree requiring HUD to provide comparable relief when HUD cannot provide section 8 New Construction assistance, HUD may provide funding for up to 350 public housing replacement units to the Chicago Housing Authority, provided that the funding will fulfill an unsatisfied obligation under the Consent Decree to provide comparable relief, and provided, that the Chicago Housing Authority submits one or more applications for such public housing replacement units in response to this NOFA. In order to receive the replacement public housing units, the application shall state that it is submitted pursuant to the preceding sentence and the application must satisfy all of the statutorily mandated requirements of the NOFA. The application for up to 350 public housing replacement units under the preceding two sentences shall not prohibit the Chicago Housing Authority from otherwise qualifying to apply and be

considered for HOPE VI funding in accordance with the terms of the NOFA.

A public housing authority that has received a HOPE VI planning grant in a prior year and that wishes to request FY 1996 HOPE VI funding for the same development(s) addressed in the planning grant must submit an application under this NOFA.

1. Categories of applications. HUD will accept applications in the following categories, subject to the limitations set forth in item 2 below:

a. PHAs that administer up to and including 2,500 public housing units may request up to and including $15 million for demolition and revitalization, replacement, and/or tenant-based assistance.

b. PHAs that administer from 2,501 to 10,000 public housing units may request up to and including $30 million for demolition and revitalization, replacement, and/or tenant-based assistance.

c. PHAs that administer 10,000 or more public housing units may request up to and including $40 million for demolition and revitalization, replacement, and/or tenant-based assistance.

d. Each PHA may, in addition to its Category A, B, or C application(s), submit one application that requests up to $10 million for demolition and relocation costs associated with the requirements of the Uniform Relocation Act for one development, or portions thereof, for which it did not apply under a Category A, B, or C application.

HUD will evaluate applications separately within the four categories. If PHAs submit multiple applications as permitted below, HUD will evaluate each application separately. HUD will determine actual award amounts pursuant to Section VI of this NOFA.

2. Funding availability by category.

a. HUD will allocate $400 million, plus any balance of the $480 million which is not otherwise awarded under this NOFA, to Categories A-C collectively.

b. HUD will allocate up to $76.784 million to Category D, to the extent of approvable applications.

c. HUD will reserve $3.216 million for technical assistance.

3. Limitations.

a. Each Category A, B or D application must provide information and request funds for only one public housing development. Contiguous or immediately neighboring developments will be considered one development for all purposes in this NOFA. A PHA in Category C may submit one or two separate applications, as long as the total amount requested for both applications does not exceed $40 million. A PHA may also submit a separate application under Category D in addition to the application(s) submitted under Categories A, B, or C.

b. There is no minimum or maximum number of housing units for which funds may be requested in a single application. However, a PHA may not request replacement funding for units for which the PHA has already been awarded prior replacement funding from HUD, either through the funding of hard units or tenant-based assistance.

c. PHAs with previously-awarded MROP or modernization funding that they believe to be inadequate for the revitalization of a targeted development may apply for supplemental funding under this NOFA. HUD will evaluate these applications under the factors established by this NOFA. PHAs must demonstrate that funding already available to them is insufficient to assure a sustainable revitalization, and/or that the portion of a development that would be unaddressed by other funding in itself would qualify for a HOPE VI grant.

d. PHAs with previous HOPE VI grants may not seek Fiscal Year (FY) 1996 HOPE VI funding to supplement the previous grant in treating the units covered by the original grant. Such PHAs may, however, seek FY 1996 HOPE VI funding to demolish and/or revitalize units in the same development that were not targeted units under the previous HOPE VI grant.

4. Tenant-based assistance. HUD will publish a separate announcement for Section 8 tenant-based assistance in FY 1996, which will be principally available for relocation and replacement units. A PHA may apply for replacement and relocation funding simultaneously under this NOFA (whether for hard units or tenant-based assistance) and under the Section 8 announcement, and must do both if it seeks tenant-based assistance under this NOFA. HUD will consider requests under this HOPE VI NOFA for tenant-based assistance only to the extent that the PHA applies for, but does not receive, replacement funds under the Section 8 program.

5. Technical assistance. In accordance with the 1996 Appropriations Act, up to $3.216 million may be used for technical assistance to be provided directly or indirectly by grants, contracts, or cooperative agreements, including training and cost of necessary travel for participants in such training, by or to officials and employees of HUD and public housing agencies and to residents.

6. Failure to proceed expeditiously. In the event that a PHA that has been selected to participate in the HOPE VI program does not proceed expeditiously, as determined by the Secretary, in accordance with its application, any Grant Agreement, and ACC Amendment, HUD shall withdraw any funding made available pursuant to this NOFA that has not been obligated by HUD, and distribute such funds to one or more other eligible PHAs, or to other entities capable of proceeding expeditiously in the same locality with the original program. In selecting PHAs for the redistribution of funds to one or more other eligible PHAs, HUD will select an applicant from the most recently conducted HOPE VI selection process.

E. Total Development Costs

1. If the average per unit hard costs of rehabilitation of the housing remaining after partial demolition is below 62.5 percent of HUD's published total development cost limits (TDC), the development is not eligible for this program (except as a Category D application to be used only for demolition and relocation as permitted hereunder).

2. If the average per unit hard costs of rehabilitating the remaining units falls between 62.5 and 90 percent of TDC, rehabilitation must be shown to be a viable, cost effective option by the application.

3. The total development cost for units to be rehabilitated with HUD funds may not exceed 90 percent, and the total development cost for newly constructed units may not exceed 100 percent, of HUD's published cost guidelines except with HUD's prior written approval. HUD may grant such approval based on adequate justification set forth in the application that addresses additional costs for items such as remediation of lead-based paint, above average costs of infrastructure replacement, accessibility improvements, historic preservation, major reconfiguration of streets and sidewalks, and other significant improvements. Higher costs must be deemed reasonable and necessary to develop modest housing that incorporates efficient design, durability, marketability, sustainability, energy conservation, safety, economical maintenance, and healthy family life in a neighborhood environment.

F. Site and Neighborhood Standards

Grantees under this program must ensure that their revitalization proposals and replacement housing plans for the targeted development(s) will avoid or

lessen concentrations of very low-income families by creating a mixed-income community or by expanding assisted housing opportunities in nonpoor and nonminority neighborhoods. Replacement of public housing units for public housing units demolished may be built on the original public housing site, or in the same neighborhood, if the number of such replacement public housing units is significantly fewer than the number of public housing units demolished. This authority was affirmed by the passage of section 1002(a)(9) of Pub. L. 104–19 (approved July 27, 1995) which explicitly authorizes HUD to approve the building of replacement public housing units under such circumstances. The Department notes that, in construing the phrase, ''significantly fewer units,'' it has chosen not to establish a quantitative standard. Instead, HUD will assess, on a case-by-case basis, the facts involved in each request. In addition, it will take into account the evolving interpretation of the phrase ''significantly fewer units'' as it develops in the course of HUD's separate rulemaking on site and neighborhood standards. Units that are not located at the targeted development and in the surrounding neighborhood will be subject to site and neighborhood standard rules stated in or made applicable by the Grant Agreement.

G. Eligible Activities and Costs

Eligible expenditures are those eligible under sections 8 and 14 of the U.S. Housing Act of 1937 (1937 Act). PHAs must principally use assistance under this HOPE VI program for demolition and/or the physical improvement and/or replacement of public housing and for associated management improvements.

1. Eligible activities.

a. Total or partial demolition of buildings or disposition of property (subject to the requirements of section 18 of the 1937 Act).

b. Capital costs of major reconstruction, rehabilitation, and other physical improvements (including energy retrofits) (subject to TDC limitations).

c. Capital costs of replacement housing, including homeownership housing (subject to TDC limitations).

d. Tenant-based assistance under section 8(b) of the 1937 Act used for replacement or relocation housing (to the extent permitted in accordance with section II.D.3 of this NOFA).

e. Management improvements for the reconstructed development.

f. Planning and technical assistance.

g. Self-sufficiency programs, including Campus of Learners programs, as described in Section V.E of this NOFA.

2. Eligible costs.

a. Capital costs may include related administrative and temporary relocation costs necessary for reconstruction, rehabilitation, demolition, or acquisition of land for replacement housing.

b. Administrative costs may include the annual premium of lead-based paint insurance incident to approved revitalization work while work is in progress.

c. Physical improvement costs may include those necessary to provide facilities primarily intended to facilitate the delivery of self-sufficiency programs and economic development opportunities for residents of the targeted development, including technologically outfitting units or buildings for the administration of a Campus of Learners. Physical improvement costs for the creation of a Campus of Learners will count towards the total development cost of a development.

3. Allocation of costs.

a. PHAs must use at least 80 percent of the funding awarded in each HOPE VI grant for any combination of the activities and related expenses listed in paragraphs (a) through (f) of section 1, above.

b. PHAs may use not more than 20 percent of the funding awarded in each HOPE VI grant for self-sufficiency programs and related administrative expenses (paragraph (g) of section 1, above), but excluding costs described in paragraph (c) of section 2).

III. Threshold Requirements

A. Noncurable Threshold Requirement

The application must provide for demolition of at least one obsolete building at the targeted development as ''obsolete'' is defined in section II.C of this NOFA. HUD will determine whether the housing is obsolete based on information provided in Exhibit B (Existing Conditions) of the application. Applicants will have no opportunity to provide or supplement the information required by Exhibit B after the deadline date listed in this NOFA (except to the extent that correction may be made to the demolition application as provided in section III.B.3 below).

B. Curable Technical Deficiencies

The requirements of this NOFA must be satisfied in order for HUD to select an application for funding. If applicants do not satisfy the technical requirements below, after the process for the correction of deficiencies described in Section VI.C of this NOFA has been carried out, HUD cannot select the applicants for participation.

1. The applicants must include evidence in Exhibit I.1.b.(2) of the application (Community and Partnerships) that at least one public meeting has been held to notify residents and community members of the proposed activities described in the application.

2. The applicants must include all certifications and submissions required as Exhibit M of the application.

3. The applicants must include a demolition application, as described in Section II.C of this NOFA, as Exhibit N of the application.

4. Applications with proposals that include new construction must include Exhibit D of the application.

IV. Application Evaluation Factors

Section IV of this NOFA describes the factors that HUD will use to review applications. Each application will be evaluated based upon its merits determined pursuant to the factors set forth below. Applications will be selected for award in accordance with Section VI. HUD will consider the entire application, as a whole, when evaluating applications. Applicants must submit the information described in Section V of this NOFA; applicants must not respond directly to the factors in Section IV. Instances in which specific submissions correspond to specific evaluation factors are noted in both Sections IV and V of this NOFA.

A. Lessen Concentration of Low-Income Residents [20 Points]

HUD will evaluate only Category A, B, and C applications for this factor. HUD will consider the entire application, and particularly Exhibit B.5.d (degree of concentration of low-income residents), Exhibits C.3 and C.4 (description of replacement units), and Exhibit C.5 (resident counseling) when evaluating this factor.

HUD will consider the extent to which the applicant proposes to place public housing in nonpoverty neighborhoods or promote mixed-income communities where public housing once stood alone, thereby ending the social and economic isolation of public housing residents, increasing their access to quality municipal services and increasing their access to job information and mentoring opportunities.

HUD will also consider the degree to which the PHA intends to provide counseling itself, or work with a

nonprofit organization to provide counseling, and other assistance to help families receiving tenant-based assistance to move to nonpoverty neighborhoods.

B. Need for Demolition, Revitalization, or Replacement [25 Points]

HUD will consider the entire application, and particularly Exhibit B (Existing Conditions) when evaluating this factor for all applications. For Category A, B, and C applications, HUD will also consider information in Exhibit C.9 to determine need for revitalized/replacement units.

HUD will consider the physical, neighborhood, and demographic factors that indicate that the targeted development, or portion thereof, is obsolete and in need of demolition, revitalization, or replacement; the effect that the obsolete structure has on the surrounding neighborhood; and, for applications in Categories A, B, and C only, the need and market for the revitalized and/or replacement units of the type and size proposed.

C. Self-Sufficiency Programs (Including Campus of Learners) [20 Points; 10 Point COL Bonus]

HUD will evaluate only Category A, B, and C applications for this factor. HUD will consider the entire application, and particularly Exhibit E (Self-Sufficiency Component), and Exhibit A (Statement of Objectives and Goals) when evaluating this factor. Exhibit C.7 will be used to evaluate the physical plan for a Campus of Learners.

A self-sufficiency program component is required for all Category A, B, and C applications. Residents of public housing communities can succeed in becoming self-reliant if they receive assistance in obtaining comprehensive training, education, and support services, and if they receive help finding gainful employment. This program should focus on offering education and job training that is applicable and appropriate for addressing the needs of residents. Each effort should be linked to the educational and employment needs of youth and adult residents as well as the potential job and contracting opportunities that may be available in the community and the nation's rapidly changing economy.

HUD will consider the overall quality of the supportive services plan; the integration of the plan with the development process; the appropriateness of scale, type, and delivery of the plan to meet the identified needs of residents; the degree of resident training, employment, and contracting planned; the degree to which service providers have made commitments to provide services or funding; the experience of proposed service providers; the extent of coordination with existing service providers and programs; the extent to which the objectives of the supportive service plan are results-oriented, with measurable goals and outcomes; and the degree to which the program is sustainable and is likely to enable residents to gain skills that assist them in becoming self-supporting.

Category A, B, and C applicants are encouraged to implement a ''Campus of Learners'' (COL), an intensive residential learning model, in connection with a self-sufficiency component in their development. At a COL, the focus is to provide educational and employment opportunities for residents living ''on campus,'' or enrolled and attending an on-site or a certified self-improvement program. Such programs will include computer technology and training, job training initiatives, educational opportunities at local schools and institutions of higher education, and resident self-sufficiency programs. As a condition of living on campus or being enrolled, residents will execute an education and employment pledge or a similar agreement to fulfill specific obligations for program completion or participation in good standing. Any authority choosing to implement a COL program must partner with local schools, institutions of higher learning in support of resident self-sufficiency activities, telecommunications firms, foundations, businesses, religious organizations, and/or the private sector as part of this initiative.

Ten points are available for this factor only as a bonus to applications that propose to convert all or a portion of the targeted development into a COL. All ten bonus points will be awarded to applications which are substantially identical to proposals which resulted in a previous designation by HUD as a COL. Up to ten points may be awarded to applications depending on the degree to which the proposals include the COL elements as described in this NOFA. More information on the COL is contained in the Campus of Learners Designation Kit, excerpts of which are included in the HOPE VI Application Kit. Information on COL is also available on the World Wide Web at http:\\www.hud.gov\nnw\campus.html.

D. Positive Incentives and Tougher Expectations [15 Points]

HUD will evaluate only Category A, B, and C applications for this factor. HUD will consider the entire application, and particularly Exhibit F (Operation and Management Principles).

HUD will consider the extent to which proposed operating and management principles will improve upon current management, reward work and promote family stability, provide greater resident security, promote economic and demographic diversity, promote economic integration and social mobility, and encourage self-sufficiency.

E. Local and National Impact [25 Points]

HUD will evaluate all applications for this factor. HUD will consider the entire application, and particularly Exhibit B (Existing Conditions), Exhibit C (Physical Description of the Revitalization Plan), and Exhibit G (Local and National Impact).

To determine local impact, HUD will consider the relative magnitude of change that the proposed activities will have on the targeted development and the affected public housing community and neighborhoods. HUD will consider the scale of the proposed demolition and revitalization in relationship to its impact on the community as a whole, not the magnitude of the program in relation to other applications. For applications that propose revitalization, HUD will consider the impact that proposed changes in management and service delivery will have on the community.

To determine national impact, HUD will consider the degree to which a program of revitalization, particularly the physical transformation, self-sufficiency program, and operation/management components of the project, could be used as a model for other communities. HUD will also assess the potential of the proposed demolition and revitalization to improve the health of a PHA that has been deemed ''troubled'' under section 6(j) of the 1937 Act. HUD will give particular consideration to revitalization plans that are essential to the removal of a PHA from judicial receivership. HUD will also consider the extent to which the targeted development has received negative national attention, including press coverage other than in local press, as indicative of the problems in public housing, and how the demolition and revitalization effort would effectively communicate the transformation of public housing.

F. Community and Partnerships [20 Points; 10 Point EZ/EC Bonus]

HUD will evaluate all applications for this factor, except with respect to Partnerships for Category D

applications, as provided below. HUD will consider the entire application, and particularly Exhibit I (Community and Partnerships).

1. Resident support/involvement. HUD encourages full and meaningful involvement of residents and members of the communities to be affected by the proposed activities. HUD will consider the extent of resident consultation in shaping the application (including the designation of the development that is the subject of the application), the level of resident support for the proposed activities, the continued involvement and participation by the affected public housing residents, and the proposed involvement of residents in management of revitalized or replacement units.

2. Community support/involvement. HUD will consider the extent of involvement by local public, private, and nonprofit entities and community representatives in the preparation of the application, the level of enthusiasm for the plan in the larger community, and the extent to which the activities proposed in the application are coordinated with other revitalization plans within the community. Up to ten bonus points will be given to revitalization plans that are coordinated with and are supportive of the Strategic Plan for a Federally designated Empowerment Zone or Enterprise Community.

3. Partnerships (for Category A, B and C applications only). PHAs are encouraged to enter into partnership arrangements for the purpose of developing housing that fits into the community and is seen as an integral part of it. Partnerships would be made with organizations that include private nonprofit or for-profit entities with experience in the development and/or management of low- and moderate-income housing, those that are skilled in the delivery of services to residents of public housing, educational institutions, foundations, and other organizations.

HUD will consider the extent to which applications propose to develop partnerships to facilitate revitalization, the potential of the proposed partnerships to provide attractive housing and economic opportunities for public housing residents and make public housing a catalyst for neighborhood revitalization, and the strength of commitments from potential partners to participate in the revitalization plan. HUD will also consider the experience and capability of proposed partners.

G. Need for Funding [20 Points]

For all applications, HUD will consider the extent to which the applicant could undertake the proposed activities without HOPE VI assistance. HUD will consider the entire application and particularly the information provided in Exhibit K.1.b (Need for HOPE VI Funds) when evaluating this factor.

H. Program Quality, Feasibility, and Sustainability [25 Points]

HUD will evaluate Category A, B and C applications only for this factor. HUD will consider the entire application when determining the comprehensiveness and effectiveness of the proposed demolition and revitalization or replacement housing as measured by the objectives and goals of the proposed plan; whether proposed program activities meet the objectives of the HOPE VI program; whether the proposed program activities will be accomplished within a reasonable time and expense; whether the proposed activities are coherent, comprehensive, and integrated; whether the proposed activities are sustainable; and the potential success of the proposed program.

I. Capability [15 Points]

For Category A, B, and C applications only, HUD will consider the ability and capacity of a PHA to carry out the revitalization and replacement project it has proposed to do under this program. HUD will consider the entire application and particularly information provided in Exhibit H when evaluating this factor.

J. Resolution of Litigation [20 Bonus Points]

An applicant in any Category whose submission demonstrates that the proposed revitalization plan will materially assist the applicant and HUD in meeting their obligations under a court ordered Consent Decree in connection with civil rights litigation will be provided with 20 additional bonus points.

V. Application Submission Requirements

This section of the NOFA describes all of the items to be included in an application, and the categories of applications for which each item is applicable. All applications, regardless of category, must include all information requested, unless otherwise specifically noted. If a PHA chooses to submit more than one application, it may duplicate common elements of all applications, such as certifications, as long as one of the applications contains certifications with original signatures, and the copies indicate which application contains the original document.

HUD reviewers will use the information provided in the application to evaluate each application in accordance with the evaluation factors described in Section IV of this NOFA. Notwithstanding that certain application submission requirement sections of the application correspond to specific evaluation factors, reviewers will consider and evaluate the application as a whole during the evaluation process.

Each application submitted by a PHA for a Category A, B, or C grant must consist of Exhibits A–N that correspond directly to sections A–N listed below. Each application for a Category D grant must consist of Exhibits A, B, G, I, K, M, and N. For ease of review, each application must include a table of contents directing the reader to the page number upon which each exhibit begins. If an exhibit is not applicable to a Category D grant, applicants must indicate this in the table of contents. The use of tabs to separate each exhibit will greatly facilitate review and expedite grant awards. If an exhibit is not applicable for any other reason, under the tab for such exhibit applicants must provide an explanation of its inapplicability to the application. Adherence to page limits is mandatory; in reviewing the applications, HUD will not consider any information on pages that exceed the limits.

A. Statement of Objectives and Goals

All applicants must provide a narrative Exhibit A, not to exceed two pages, that describes the objectives and goals of the proposed program and describes the projected goals for all activities proposed, including the self-sufficiency component, if applicable. The narrative should describe how program activities respond to the program objectives set forth in Section I of this NOFA. Goals should be results-oriented, realistic, and measurable. HUD will use information from Exhibit A primarily to evaluate the Program Quality, Feasibility, and Sustainability (IV.H) and Self-Sufficiency Programs (IV.C) factors.

B. Existing Conditions

All applicants must provide an Exhibit B that responds to all items in this section. HUD will use information from Exhibit B primarily to evaluate the Need for Demolition, Revitalization, or Replacement (IV.B), Lessen Concentrations of Low-Income

Residents (IV.A), Local and National Impact (IV.E), and Program Quality, Feasibility and Sustainability (IV.H) factors. HUD will use items 3 and 4, below, to determine whether the application meets the threshold requirement for obsolete housing (III.A).

The applicant must provide the following information in a narrative, not to exceed eight pages (plus the map required under 1.d) below:

1.Description of current development.

a. An identification of the targeted development.

b. The total number of current units, by unit size.

c. The number and location of vacant units.

d. In addition to the narrative, provide a one page map of the current site.

2. Proposed demolition/disposition. Applicants must briefly describe the extent of the proposed demolition/disposition, and identify the units to be demolished. (Also attach a demolition/disposition application as Exhibit N of the application, as described in Section II.C of this NOFA.)

3. Physical indicators of obsolescence.

a. The cost of rehabilitation/reconstruction per unit as a percentage of TDC.

b. Structural deficiencies (e.g., settlement of earth below the building caused by inadequate structural fills, faulty structural design, or settlement of floors).

c. Substantial deterioration (e.g., severe termite damage or damage caused by extreme weather conditions) or other design or site problems (e.g., severe erosion or flooding).

d. Design and site deficiencies (e.g., high density or indefensible space).

e. Major system deficiencies (e.g., peeling and chipping lead-based paint, lack of reliable and reasonably efficient heat and hot water, major structural deficiencies, electrical system not satisfying code requirements, poor site conditions, leaking roof, deteriorated laterals and sewers, or high number of plumbing leaks).

4. Neighborhood indicators of obsolescence.

a. Physical deterioration of the neighborhood.

b. Change of the neighborhood from residential to industrial or commercial development.

c. Environmental conditions that may jeopardize the suitability of the site or a portion of the site and its housing structures for residential use. These conditions may be determined by either a HUD-related environmental review, in accordance with 24 CFR part 50 or part 58, which was previously conducted in connection with earlier assistance, or another assessment of conditions that, in the opinion of the applicant, may jeopardize suitability of the site.

d. Deficiencies in the neighborhood that revitalization could ameliorate.

5. Demographic indicators of distress. For the following elements, applicants must provide the most current information that relates as specifically as possible to the targeted site. If site information is not available, applicants must indicate whether information provided pertains to the development, neighborhood, city, census tract, or other demographic area.

a. Average income as a percentage of area median.

b. Statistical information on the incidence of crime, including the following: frequency of criminal acts of various types (including drug-related activities), number of lease terminations or evictions for criminal activity, average number of police calls to the development per month, and the average monthly incidence of vandalism to PHA property in dollars.

c. Vacancy rate.

d. Degree of concentration of very low-income persons in the neighborhood.

6. Effect on the neighborhood. Applicants must describe how the physical, neighborhood, and demographic conditions of the obsolete development, or portions thereof, affect the residents of the surrounding neighborhood, the greater community, and city.

C. Physical Description of Revitalization Plan

Category A, B, and C applicants only must provide a narrative Exhibit C, not to exceed eight pages. HUD will use information from Exhibit C primarily to evaluate the Program Quality, Feasibility and Sustainability (IV.H), Lessen Concentration of Low-Income Residents (IV.A), and Local and National Impact (IV.E) factors. HUD will use information in Exhibit C.9 to evaluate the Need for Demolition, Revitalization, or Replacement (IV.B) factor, and information in Exhibit C.7 to evaluate the Self-Sufficiency (IV.C) factor. Applicants must describe the extent of the physical revitalization and/or replacement activities proposed, including the following, as appropriate:

1. The changes in the sizes and shapes of units and other changes in the use of interior space, including any reduction in the number of units due to reconfiguration or changes in the utilization of interior space.

2. Any community space alterations, improvements, or additions.

3. Any proposed on-site replacement units for public housing units proposed to be demolished, including number, type, and size of units, with a description of how such on-site replacement housing will avoid or lessen concentrations of very low-income families.

4. Any proposed off-site replacement units, including the mix of building types, number of dwelling units, and unit sizes of replacement housing. Any applicant proposing to create off-site replacement units MUST use census data to describe how such housing will avoid or lessen concentrations of very low-income families.

5. The number of any Section 8 certificates to be used for replacement or relocation housing, and whether those certificates are existing or are requested in this application and under the Section 8 notice as required by section II.D.3 of this NOFA. A description of counselling or other assistance that will be provided to residents receiving tenant-based assistance as relocation or replacement housing to enable them to move to areas of lower poverty if they so choose.

6. Any site acquisitions necessary or proposed, the purpose of the acquisition, and how that acquisition is proposed to be financed.

7. An explanation, if applicable, of how the proposed revitalization will resemble, or be used as, an education campus in the implementation of a Campus of Learners.

8. If available, provide a postrevitalization site map.

9. A description of the need and market for the revitalized or replacement units of the type and size proposed. Cite (but do not submit) the city's Consolidated Plan, other local plans, market studies, or other sources of information on housing supply. Identify other assisted housing, existing and proposed (including housing funded but not completed).

Applications for New Construction

In accordance with section 6(h) of the 1937 Act, the PHA may engage in new construction only if the PHA demonstrates to the satisfaction of the Secretary that the cost of new construction in the neighborhood where the PHA determines the housing is needed is less than the cost of acquisition or acquisition and rehabilitation in such neighborhood. Therefore, every application that includes new construction must be accompanied by a narrative Exhibit D that contains either the information described in paragraphs 1 and 3 of this section, below, or the information

described in paragraphs 2 and 3 of this section, below. The narrative, certification and statement, as applicable, should not exceed three pages.

1. A PHA comparison of the costs of new construction (in the neighborhood where the PHA proposes to construct the housing) and the costs of acquisition of existing housing or acquisition and rehabilitation in the same neighborhood (including estimated costs of lead-based paint testing and abatement).

2. A PHA certification, accompanied by supporting documentation, that there is insufficient existing housing in the neighborhood to develop housing through acquisition of existing housing or acquisition and rehabilitation.

3. A statement that:

a. Although the application is for new construction, the PHA will accept acquisition of existing housing or acquisition and rehabilitation, if HUD determines the PHA cost comparison or certification of insufficient housing does not support approval of new construction; or

b. The application is for new construction only. (In any such case, if HUD cannot approve new construction under section 6(h) of the 1937 Act, HUD will reject the application.)

E. Self-Sufficiency Component

Category A, B, and C applicants only must provide a narrative Exhibit E, not to exceed 10 pages. HUD will use information from Exhibit E primarily to evaluate the Program Quality, Feasibility and Sustainability (IV.H) and Self-Sufficiency Programs (IV.C) factors.

A program of self-sufficiency may include, but is not limited to: (a) Child care, of a type that provides sufficient hours of operation and serves appropriate ages as needed to facilitate parental access to education and job opportunities; (b) Employment training and counseling, such as job training, preparation and counseling, job development and placement, and follow-up assistance after job placement; (c) Computer skills training; (d) Education, including remedial education, literacy training, completion of secondary or postsecondary education, assistance in the attainment of certificates of high school equivalency, and the integration of modern computer technology into the education program; (e) Transportation as necessary to enable any participating family member to receive available services or to commute to his or her place of employment; (f) Partnerships with local businesses for job placement for residents who complete adult education and job training programs; (g) Substance/alcohol abuse treatment and counseling; (h) Health care services; and (i) Any other services and resources, including case management, that are determined to be appropriate in assisting eligible residents.

1. Provide a brief description of each service that is expected to be made available for residents. For each service, to the extent that providers are identified, indicate the name of the service provider and the experience of that provider. If providers are not identified, describe the process the PHA will use to identify providers. Describe the location of the service provision, the timing of the service provision and how it relates to the development schedule, how long the service will be provided to residents, and whether the service will be available to residents that will remain on site, are moved off site, and/or are in relocation sites.

2. Describe the analysis and any consultation with residents that the PHA employed to determine the needs upon which the self-sufficiency program was based and that will continue to be used to reevaluate service needs in the future.

3. Describe how residents will be selected to participate in services.

4. In addition to the narrative, attach letters from service providers that commit to provide services to residents.

5. Describe plans to provide on-the-job training, employment, and contracting opportunities to residents during implementation of the revitalization plan.

6. Indicate how the goals projected for the self-sufficiency component, as described in Exhibit A (Statement of Objectives and Goals), will be met through the self-sufficiency program.

7. Describe the Campus of Learners (COL) program if one is proposed. Explain how supportive services under the program will be provided at a level higher than currently provided, how the program will be sustainable, and how it will enable residents to gain skills and become self-supporting. The description should contain each of the following elements:

a. An identifiable physical campus, as demonstrated in the proposed physical plan (section V.C.9 above), that integrates local schools, parks, and, to the extent possible, institutions of higher learning.

b. A comprehensive education program that includes programs for young children, after-school learning sessions for school-age residents, life skills training for the elderly, and job readiness and training programs for other adult residents.

c. Collaborations with educational institutions and organizations, including the local school system, local colleges, universities, and other institutions of higher learning, in order to harness the resources of these establishments through specialized education and technology classes.

d. Access to technology by wiring and equipping every unit in the COL site, and computer labs on campus for computer classes, language skills, life skills training, and GED classes.

e. A contract or pledge executed by residents that will state a resident's agreement that living on the ''campus'' is incidental to and reliant upon participation in the learning program, and residents enrolled in the program must fulfill specific obligations for programs completion.

F. Operation and Management Principles

Category A, B, and C applicants only must provide a narrative Exhibit F, not to exceed five pages, that describes preliminary post-redevelopment operation and management policies for the targeted development. HUD will use information from Exhibit F primarily to evaluate the Positive Incentives and Tougher Expectations (IV.D) and Program Quality, Feasibility and Sustainability (IV.H) factors.

For application purposes, the PHA should assume that Congress will make permanent the program modifications made by the 1996 Appropriations Act. However, PHAs will be required, if selected, to conform their proposals to current law. HUD intends to issue additional guidance on any changes in law and policy.

Applicants must describe the manner and extent to which the proposed operation and management principles will:

1. Achieve efficient and effective management and maintenance through private management or other management improvements.

2. Reward work and promote family stability through positive incentives such as income disregards and ceiling rents. Note that PHAs may establish ceiling rents (but must require a $25 minimum rent) and may institute earned income disregards for FY 1996.

3. Provide greater security by instituting tough screening requirements and enforcing tough lease and eviction provisions, including the ''One Strike and You're Out'' policy.

4. Promote economic and demographic diversity through a system of local preferences. Note that Congress has suspended all Federal preferences for FY 1996.

5. Promote economic integration and social mobility for public housing residents by providing housing for people with a broad range of incomes in such a way that public and market rate units are indistinguishable.

6. Encourage self-sufficiency by utilizing lease requirements that promote community service and/or transition from public housing.

G. Local and National Impact

All applicants must provide a narrative Exhibit G, not to exceed six pages. HUD will use information from Exhibit G primarily to evaluate the Local and National Impact (IV.E) and Program Quality, Feasibility and Sustainability (IV.H) factors.

1. Local impact.

a. All applicants must: Describe the extent to which the physical changes resulting from the proposed demolition and revitalization or replacement will significantly address the indicators of obsolescence and distress described in Exhibit B (Existing Conditions).

b. Category A, B, and C applicants only must: Explain how the plan for the provision of services described in Exhibit E and the plan for management of the development and/or any replacement units after revitalization described in Exhibit F will contribute to the positive change for residents of the development and the surrounding community.

2. National impact.

(1) Categories A, B, and C applicants only must, if applicable, discuss the potential for the program of revitalization, or some aspect of it, to become a model for other communities.

a. All applicants must, if applicable: (1) Describe the extent to which the targeted development has been perceived as an example of the problems of public housing and how the proposed revitalization would effectively communicate the transformation of public housing. Describe the national impact of the current obsolete housing as evidenced by any national attention, including press coverage received prior to the date of this NOFA. Submit copies, if applicable, of negative coverage of the targeted development in print media (other than local media) that predates this NOFA.

(2) If the applicant PHA is on the national troubled housing list, describe the potential of the proposed demolition and any reconstruction or replacement housing to remove the PHA from the list and (if applicable) remove the PHA from judicial receivership.

H. Capability

Category A, B, and C applicants only must provide a narrative Exhibit H. HUD will use information from Exhibit H to evaluate all of the factors and particularly the Capability (IV.I) factor. Applicants must provide a narrative, not to exceed three pages, that includes the following information:

1. Describe evidence of progress made under any previously-awarded HOPE VI, development, and/or modernization funding.

2. Provide the PHA's overall and modernization scores under the Public Housing Management Assessment Program (PHMAP), 24 CFR part 901, most recently established by HUD.

3. Provide a brief summary of the PHA's most recent fiscal audit and any outstanding HUD monitoring findings.

4. Describe factors that will ensure that implementation of the program can begin quickly if the application is approved for an award.

5. Describe any prior experience in financing, leveraging, and partnership activities.

6. If a receiver or alternate development team is in place, describe the extent of its authority, the areas over which it will have control, and its experience and track record in managing troubled PHAs and/or in accomplishing large-scale development in a timely, cost-effective, and successful manner.

7. Provide an organizational chart that indicates the proposed staffing of the revitalization program. Describe the qualifications of the PHA's key staff who will be responsible for the oversight of the program.

I. Community and Partnerships

All applicants must provide a narrative Exhibit I, not to exceed nine pages, plus any pertinent letters as provided below. HUD will use information from Exhibit I primarily to evaluate the Community and Partnerships (IV.F) and Program Quality, Feasibility and Sustainability factors (IV.H). HUD will use information in Exhibit I.1.b.ii below to determine whether the resident consultation requirement of section III.B.1 has been met. Exhibit I should contain the following information:

1. Resident support/involvement.

a. Category A, B, and C applicants only:

(1) Describe the level of participation and/or consultation with residents throughout the PHA in the preparation of the application.

(2) Explain how the PHA would continue the involvement and participation by the affected public housing residents.

(3) Describe any planned roles for residents in the management and operation of the revitalized and replacement units and the developments of which they are a part.

b. All applicants must attach the following:

(1) Any letters from residents in support of or opposition to the demolition, any proposed revitalization or self-sufficiency programs, or programs of positive incentives and tougher expectations received.

(2) Evidence that at least one public meeting has been held to notify residents and community members of the proposed activities described in this application. The meeting may be a regularly scheduled PHA board meeting. Evidence must include the notice announcing the meeting, how the notice was distributed, and a copy of the sign-in sheet. An application must contain such evidence that a public meeting took place in order to be selected for participation.

2. Community support/involvement. All applicants must respond to this item.

a. Describe the level of participation and/or consultation in the preparation of the application by community organizations and institutions, agencies of local and State government, businesses, nonprofit corporations, social service providers, philanthropic organizations, educational institutions, and other entities. Discuss how the PHA would continue to involve these entities and groups if the application is selected.

b. Provide any letters, resolutions, or other available documentation in support of, or objection to, the physical as well as the self-sufficiency component of the proposed demolition, and the revitalization and/or replacement of units. Include any letters that commit resources, both monetary and in-kind, from community organizations.

c. Detail other revitalization activities or land use plans underway or planned in the neighborhood(s) that the revitalization plan would affect. Provide reference to and maps indicating the location of activities and resources identified in the city's or State's Consolidated Plan or Federally designated Empowerment Zone or Enterprise Community Strategy (if applicable) in relationship to the development. Describe the current or projected impacts of these community-wide activities on residents of the development(s). Describe how the PHA plans to coordinate with these efforts.

d. If the targeted development is within a Federally designated Empowerment Zone or Enterprise Community, provide evidence that the PHA has an established relationship with the EZ/EC administrative body that was established before the publication of this NOFA, and that the proposed revitalization activity is consistent with and supportive of the Strategic Plan for the Federally designated Empowerment Zone or Enterprise Community. Applicants that provide a letter of endorsement from the EZ or EC governing body will receive special consideration.

e. If the revitalization plan calls for changes in streets or other infrastructure, provide a letter of commitment from the unit of general local government to provide the resources necessary to carry out those activities.

3. Partnerships. Category A, B, and C applicants only must respond to this section.

a. Describe plans to accomplish the revitalization through a proposed partnership with one or more entities, or through contractual or subgrant relationships (such as a program management or alternative administrator agreement or supportive service subgrantees). Include all relevant information about each proposed entity, including the nature of the organization, qualifications, the respective responsibilities and obligations of each party, and the proposed financial relationship, i.e., the basis and source of compensation to nonapplicant parties.

b. Describe how the use of the partnership will enhance the PHA's ability to produce attractive housing, economic opportunities to residents, and mixed-income housing, and to revitalize neighborhoods.

c. Provide any commitments from potential partners to participate in the revitalization.

HUD does not expect applicants proposing innovative ownership or financing structures to submit immediately approvable final plans for such structures as part of their application. Specifically, HUD does not expect PHAs to procure partners before an application is approved and warns PHAs against procuring partners in a hasty manner or not in compliance with applicable laws and procurement regulations. However, applicants should describe proposed structures and relationships in sufficient detail to demonstrate a reasonable likelihood that the revitalization plan is feasible and in accordance with law. Please refer to 24 CFR part 941, subpart F, published in the Federal Register on May 2, 1996 (61 FR 19708, 19714), for guidance on procurement of partners.

J. Resources

Only Category A, B, and C applicants must provide an Exhibit J. PHAs may use HOPE VI funds in conjunction with any other funds available to the PHA, so long as the use of HOPE VI funds complies with the requirements set forth in this NOFA, and the Grant Agreement and ACC Amendment to be executed with HUD; the use of other funds complies with any restrictions applicable to them; and the proposed use of all funds complies with section 102(d) of the Department of Housing and Urban Development Reform Act of 1989 (42 U.S.C. 3531 note) and HUD's subsidy layering guidelines, including those found in 24 CFR part 4.

Applicants must provide as Exhibit J a list of all of the individuals and organizations from which they have received evidence of financial or other support for the proposed activities. Next to each source, applicants must list the dollar figure associated with the resource to be provided, including the dollar value of any in-kind services or materials to be provided, if known. Next to the dollar figure, applicants must indicate the application page number of letters of support or commitments for contributions that describe the nature of the support and/or resource to be provided, the dollar value of the donation, if available, any conditions attached to the commitment, and the date that the resource will be made available. Applicants must include letters that provide resources for capital costs, self-sufficiency programs, and all other activities of the program. Applicants may attach letters as part of Exhibit J, and/or in Exhibit E.5 (supportive service support) or Exhibit I.2.b and I.2.e (local government support).

K. Program Financing and Sustainability

HUD will use information provided in Exhibit K primarily to evaluate the Need for Funding (IV.G) and Program Quality, Feasibility, and Sustainability (IV.H) factors.

1.All applicants must provide an Exhibit K that contains the following:

a. Provide an estimated budget (Form HUD–52825–A, HOPE VI Budget, Parts I and II) showing uses of HOPE VI and other funding for the proposed demolition and, if applicable, the revitalization plan. Part I of the form will indicate the general uses of funds, and Part II breaks each individual use into specific activities.

b. In order to assure that the HOPE VI funds are not used in lieu of otherwise available funds, provide the certification included in the PHA Board Resolution for Submission of HOPE VI Application (form HUD 52820–A), submitted under Exhibit M.3, that the PHA could not undertake the activities proposed through this application without the additional assistance provided by the requested HOPE VI grant. In a narrative, not to exceed two pages, discuss how the funds reasonably expected to be available to the PHA over the period of the CGP Five-Year Action Plan are not adequate to address the revitalization needs of the development. Identify all HUD funds currently committed to the PHA for capital purposes and available for use at the targeted development, and where any currently allocated funds for that development would be reallocated, if applicable. Justify why the HOPE VI request should not be reduced by the currently-allocated amount. If the PHA is selected to participate in the HOPE VI program, the PHA's CGP Five-Year Action Plan will be revised to reflect the additional funds.

2. Category A, B, and C applicants only also must include the following information as part of Exhibit K:

a. Provide a sources-and-uses analysis of capital costs. Although non-HOPE VI funding commitments may not be in place at the time the application is submitted, PHAs should identify what types of funding they will seek to finance their concepts, on what terms these types of funding might be available, and the level of commitment funders are willing to make at this time.

b. If average per unit costs for new construction funded by HUD will exceed 100 percent of TDC, or average per unit costs for rehabilitation funded by HUD will exceed 90 percent of TDC, provide a narrative, not to exceed one page, that justifies the need for higher costs. See discussion of costs in Section II.E of this NOFA.

c. Provide a five-year operating budget, showing all projected expenses and income. Operating estimates should take into account realistic market rents for the proposed unit types and sizes, the amount of funding needed for self-sufficiency programs, and costs of proposed operating and management policies. Explain all assumptions made in the development of the budget.

d. Sustainability: Describe how the PHA will be able to maintain proposed programs and policies on a long term basis, given the resources projected to be available for the development. This description should not exceed one page.

L. Resolution of Litigation

In order to receive the 20 bonus points available to applications that demonstrate that the proposed revitalization plan will materially assist the applicant and HUD in meeting their obligations under a court ordered Consent Decree in connection with civil rights litigation, an applicable Category A, B, C, or D applicant shall submit a narrative, not to exceed two pages, that describes the obligations of the applicant and HUD under the Consent Decree, and explains how the activities proposed in the revitalization plan will materially assist the applicant and HUD in meeting such obligations.

M. Required Certifications

Each applicant must submit an Exhibit M that includes all of the following letters and forms, fully executed and dated. Submission of all of the following letters and forms is a requirement of this NOFA.

1. As the first page of the application, submit an SF–424, Application for Federal Assistance. This form must include the Housing Authority Code, provide the name of the targeted development, list all activities proposed in the application (demolition, revitalization, replacement, Section 8) and the amount of funds requested for each. This form must be signed by the Executive Director of the PHA.

2. A letter from the Chief Executive of the applicable jurisdiction in support of the application.

3. Form HUD–52820–A, PHA Board Resolution for Submission of HOPE VI Application.

4. A certification by the public official responsible for submitting the Consolidated Plan under 24 CFR part 91 that the proposed activities are consistent with the approved Consolidated Plan of the State or unit of general local government within which the development is located.

5. Certification for a Drug-Free Workplace (Form HUD–50070) in accordance with 24 CFR 24.630.

6. SF–LLL, Disclosure of Lobbying Activities, only if any funds other than Federally-appropriated funds will be or have been used to lobby the executive or legislative branches of the Federal Government regarding specific grants or contracts.

7. Form HUD 2880, Recipient Disclosure/Update Report. This report provides disclosures required by section 102 of the HUD Reform Act of 1989 (Pub. L. 101–235; approved December 15, 1989). Implementing regulations in 24 CFR part 4 require PHAs that seek assistance from HUD for a specific activity to make the disclosures required under § 4.9.

8. Evidence of Legal Eligibility. If it has not previously done so, the PHA must document that it is legally organized. Applicants must submit a current General Certificate (Form HUD 9009).

9. Cooperation Agreement (Form HUD 52481). The PHA must document that the number of units requested, along with units in management and other units in development, are covered by Cooperation Agreements.

10. Anti-Lobbying Certification for Contracts, Grants, Loans and Cooperative Agreement (Form HUD–50071). In accordance with section 319 of the Department of the Interior and Related Agencies Appropriations Act for Fiscal Year 1990 (31 U.S.C. 1352) (the Byrd Amendment) and the implementing regulations in 24 CFR part 87, the PHA must certify that no Federally-appropriated funds have been paid or will be paid, by or on behalf of the PHA, for influencing or attempting to influence an officer or employee of any agency, or a member of Congress in connection with the awarding of any Federal contract, the making of any Federal grant or loan, the entering into of any cooperative agreement, and the extension, continuation, renewal, amendment, or modifications of any Federal contract, grant, loan, or cooperative agreement. (The rule also requires disclosure from the PHA if nonappropriated funds have been spent or committed for lobbying activities, if those activities would be prohibited if paid with appropriated funds.)

N. Demolition/Disposition Application

In accordance with Section II.C of this NOFA, demolition of obsolete public housing is a required element of the program.

1. If a demolition/disposition application was not previously submitted for the targeted development, submit as Exhibit N a demolition/disposition application in accordance with 24 CFR part 970.

2. If a demolition/disposition application for the targeted development was previously submitted to HUD but has not yet been approved, submit as Exhibit N a copy of the PHA's letter transmitting the application to HUD.

3. If a demolition/disposition application has been submitted and approved by HUD, but the demolition has not yet commenced, submit as Exhibit N a copy of HUD's approval letter.

VI. Application Processing and Grant Administration

Application Evaluation

Awards under this NOFA will be made through a selection process that will award grants to the most meritorious applications based upon points as provided below.

HUD will preliminarily review, rate and rank each application, including those applications from prior HOPE VI planning grant recipients which are for the same development as their planning grant, on the basis of the factors set forth in Section IV of this NOFA. HUD will evaluate Category A, B, and C applications based upon all of the factors described in section IV of this NOFA. HUD will evaluate applications in Category D based upon the Need for Demolition, Revitalization or Replacement (IV.B), Local and National Impact (IV.E), Community and Partnerships (IV.F), Need for Funding (IV.G), and Resolution of Litigation (IV.J) factors only.

A final review panel will then review the scores of all applications whose preliminary score is above a base score established by HUD, using the same evaluation factors set forth in Section IV of this NOFA. HUD intends to set the base scores so that applications for Categories A, B, and C requesting approximately $800 million and applications for Category D requesting $100 million are advanced to the final review stage. Additionally, notwithstanding their preliminary score, HUD will advance for final review the top six rated applications from each of Categories A, B, and C. The HOPE VI program, following Congressional direction, has heretofore incorporated a progression from planning grants to implementation grants. Because of the large number of existing planning grants and changes in program structure and eligibility, and because a PHA that has used its planning grant effectively should be able to demonstrate merit under the rating factors, HUD has not given any rating preference to prior planning grant sites. However, in order to preserve program continuity and obtain full consideration of sites in which the Department has made an investment of HOPE VI funds, the Department will review all such applications in the second review stage. Such applications will not receive special consideration during the panel review stage and will be reviewed in both stages of the selection process according to the evaluation factors set forth in Section IV of this NOFA. The review panel will assess each of the applications advanced to final review

and will assign the final scores. HUD will select for funding the four most highly rated applications from each of categories A, B, and C. HUD will select the most highly rated applications in Category D, up to available funding. Remaining funding from the approximately $400 million will be allocated to the remaining most highly rated applications in categories A-D, regardless of category.

HUD, in its discretion, may choose to select a lower-rated approvable application over a higher-rated application in order to (1) increase the level of national geographic diversity of applications selected under this NOFA, or (2) implement an exemplary, innovative or unique revitalization plan whose approach would otherwise be inadequately represented in the pool selected and which HUD determines is a revitalization model which should be tested for the benefit of future efforts.

HUD may establish a panel of experts with whom to consult for advice on elements of the applications that are within their expertise. Such experts will be advisors and will not conduct any part of the selection of grantees.

B. Reduction in Requested Grant Amount

HUD may select an application for participation in the HOPE VI program but grant an award pursuant to such application in an amount lower than the amount requested by the applicant, or adjust line items in the proposed grant budget within the amount requested (or both), if it determines that partial funding is a viable option, and:

1. The amount requested for one or more eligible activities is not supported in the application or is not reasonably related to the service or activity to be carried out;
2. An activity proposed for funding does not qualify as an eligible activity and can be separated from the budget;
3. The amount requested exceeds the total cost limitation established for a grant;
4. Insufficient funds are available to fund the full amount; or
5. Providing partial funding will permit HUD to fund one or more additional qualified PHAs.

C. Corrections to Deficient Applications

HUD will evaluate each application against the stated factors in Section IV of this NOFA. Upon completion of the evaluation, if HUD determines that a PHA failed to submit any of the items listed in Section III.B of this NOFA, or if the application contains a technical mistake, such as an incorrect signatory, or is missing any other information that does not affect evaluation of the application, HUD may notify the PHA in writing and by facsimile (fax) that the PHA has 14 calendar days from the date of HUD's written notification to submit or correct any of the specified items. The PHA will have no opportunity to correct deficiencies other than those identified in HUD's written notification, or otherwise to supplement or revise its application. If any of the items identified in HUD's written notification is not corrected and submitted within the required time period, the application will be ineligible for further consideration.

D. Notification of Funding Decisions

HUD will not notify applicants as to whether they have been selected to participate until the announcement of the selection of all recipients under this NOFA. HUD will provide written notification to applicants that have been selected to participate and to those that have not been selected. HUD's notification of award to a selected applicant will constitute a preliminary approval by HUD subject to the completion of a subsidy layering review pursuant to 24 CFR 941.10(b), HUD's completion of an environmental review of the proposed sites, and the execution by HUD and the recipient of a Grant Agreement and/or ACC Amendment. Selection for participation (preliminary approval) does not constitute approval of the proposed site(s). Each proposal will be subject to a HUD environmental review, in accordance with 24 CFR part 50, and the proposal may be modified or the proposed sites rejected as a result of that review. Each application must contain the certification included in the PHA Board Resolution for Submission of HOPE VI Application (form HUD 52820–A), submitted under Exhibit M.3, that the applicant will assist HUD in complying with environmental review procedures. Under that certification, the applicant/recipient may not acquire, rehabilitate, convert, lease, repair, or construct a property, or commit HUD or local funds to these activities, until HUD approves the site.

E. Grant Agreement/ACC Amendment

After HUD selects a PHA to receive an award pursuant to this NOFA, it will enter into a Grant Agreement and/or ACC Amendment, as determined appropriate by HUD, with the recipient setting forth the amount of the grant and applicable rules, terms, and conditions, including sanctions for violation of the agreement. Among other things, the agreement/amendment will provide that the recipient agrees to the following:

1. To carry out the program in accordance with the provisions of this NOFA, applicable law, the approved application, and all other applicable requirements, including requirements for mixed finance development, if applicable;
2. To comply with such other terms and conditions, including recordkeeping and reports, as HUD may establish for the purposes of administering, monitoring, and evaluating the program in an effective and efficient manner;
3. That HUD may require the PHA to procure a program manager if selected for an award, as a condition of the grant agreement; and
4. That HUD may withhold, withdraw, or recapture any portion of a grant, terminate the Grant Agreement, or take other appropriate action authorized by the 1996 Appropriation Act or under the Grant Agreement or ACC Amendment if HUD determines that the recipient is failing to carry out the approved revitalization program in accordance with the terms of the application as approved and this NOFA.

The Grant Agreement will also provide program rules, describe requirements for implementation of the revitalization plan, and provide any special conditions on the grantee, as applicable.

VII. Applicability of Program Requirements

The development to be revitalized is a public housing development. Accordingly, certain activities under the revitalization plan are subject to statutory requirements applicable to public housing developments under the U.S. Housing Act of 1937 (the 1937 Act), other statutes, and the ACC. Within such restrictions, HUD seeks innovative solutions to the long-standing problems of obsolete developments. In order to satisfy any particular statutory requirement, a Grantee may take measures as described in implementing regulations or, upon request to HUD for a different approach, as otherwise approved in writing by HUD.

The recipient must conduct the following activities, which may be undertaken with HOPE VI grant funds, in accordance with the cited program requirements or otherwise with HUD's written approval, consistent with the 1996 Appropriations Act and this NOFA.

A. Demolition and disposition activity under the grant must be conducted in accordance with 24 CFR part 970;

B. Public housing development activity (including on-site reconstruction as well as off-site

replacement housing) must be conducted in accordance with 24 CFR part 941, including mixed finance development in accordance with subpart F (published in the Federal Register on May 2, 1996 (61 FR 19708, 19714)). HUD will distribute the Mixed-Finance ACC Amendment to the recipients.

C. Replacement housing activity using Section 8 rental certificates must be conducted in accordance with 24 CFR part 882;

D. Replacement housing activity with units acquired or otherwise provided for homeownership under section 5(h) of the 1937 Act must be conducted in accordance with 24 CFR part 906;

E. Replacement housing activities provided through housing opportunity programs of construction or substantial rehabilitation of homes must be conducted in accordance with 24 CFR part 280 (the Nehemiah Program);

F. Replacement housing activities under the HOPE II program must be conducted in accordance with 24 CFR subtitle A, appendix B;

G. Replacement housing activities under the HOPE III program must be conducted in accordance with 24 CFR subtitle A, appendix C;

H. Rehabilitation and physical improvement activities must be conducted in accordance with 24 CFR 968.112 (b), (d), (e), and (g)–(o), 24 CFR 968.130, and 24 CFR 968.135 (b) and (d). These provisions were published in the Federal Register on March 5, 1996 (61 FR 8712, 8738).

I. The administration and operation of units must be in accordance with all existing public housing rules and regulations.

PHAs may request, for the revitalized development, a waiver of HUD regulations (that are not statutory requirements) governing rents, income eligibility, or other areas of public housing management to permit a PHA to undertake measures that enhance the long-term viability of a development revitalized under this program.

VIII. Applicability of Other Federal Requirements

A. Flood Insurance

In accordance with the Flood Disaster Protection Act of 1973 (42 U.S.C. 4001–4128), HUD will not approve applications for grants providing financial assistance for acquisition or construction (including rehabilitation) of properties located in an area identified by the Federal Emergency Management Agency (FEMA) as having special flood hazards, unless:

1. The community in which the area is situated is participating in the National Flood Insurance program (see 44 CFR parts 59 through 79), or less than one year has passed since FEMA notification regarding such hazards; and

2. Flood insurance is obtained as a condition of approval of the application.

B. Coastal Barriers Resources Act

In accordance with the Coastal Barrier Resources Act (16 U.S.C. 3601), HUD will not approve grant applications for properties in the Coastal Barrier Resources System.

C. Fair Housing Requirements

Recipients must comply with the requirements of the Fair Housing Act (42 U.S.C. 3601–19) and the regulations in 24 CFR part 100; Executive Order 11063 (Equal Opportunity in Housing) and the regulations in 24 CFR part 107; the fair housing poster regulations in 24 CFR part 110 and the advertising guidelines in 24 CFR part 109; and Title VI of the Civil Rights Act of 1964 (42 U.S.C. 2000d) and the regulations in 24 CFR part 1.

D. Nondiscrimination on the Basis of Age or Handicap

Recipients must comply with the prohibitions against discrimination on the basis of age pursuant to the Age Discrimination Act of 1975 (42 U.S.C. 6101–07) and the regulations in 24 CFR part 146; the prohibitions against discrimination against, and reasonable modification, accommodation, and accessibility requirements for, handicapped individuals under section 504 of the Rehabilitation Act of 1973 (29 U.S.C. 794) and the regulations in 24 CFR part 8; the Americans with Disabilities Act (42 U.S.C. 12101 et seq.) and regulations issued pursuant thereto (28 CFR part 36); and the Architectural Barriers Act of 1968 (42 U.S.C. 4151) and the regulations in 24 CFR part 40.

E. Employment Opportunities

The requirements of section 3 of the Housing and Urban Development Act of 1968 (12 U.S.C. 1701u) (Employment Opportunities for Lower Income Persons in Connection with Assisted Projects) and the regulations in 24 CFR part 135 apply to this program.

F. Minority and Women's Business Enterprises

The requirements of Executive Orders 11246, 11625, 12432, and 12138 apply to this program. Consistent with HUD's responsibilities under these orders, recipients must make efforts to encourage the use of minority and women's business enterprises in connection with funded activities.

G. OMB Circulars

The policies, guidelines, and requirements of OMB Circular Nos. A–87 (Cost Principles Applicable to Grants, Contracts and Other Agreements with State and Local Governments) and 24 CFR part 85 (Administrative Requirements for Grants and Cooperative Agreements to State, Local, and Federally Recognized Indian Tribal Governments), as modified by 24 CFR 941, subpart F relating to the procurement of partners in mixed-finance developments, apply to the award, acceptance, and use of assistance under the program by PHAs, and to the remedies for noncompliance, except when inconsistent with the provisions of the 1996 Appropriations Act, other Federal statutes, or this NOFA. Recipients are also subject to the audit requirements of OMB Circular A–128 implemented at 24 CFR part 44. Copies of OMB Circulars may be obtained from E.O.P. Publications, Room 2200, New Executive Office Building, Washington, DC 20503, telephone (202) 395–7332 (this is not a toll-free number). There is a limit of two free copies.

H. Drug-Free Workplace

Applicants must certify that they will provide a drug-free workplace, in accordance with the Drug-free Workplace Act of 1988 and HUD's implementing regulations at 24 CFR part 24, subpart F.

I. Debarred or Suspended Contractors

The provisions of 24 CFR part 24 apply to the employment, engagement of services, awarding of contracts, subgrants, or funding of any recipients, or contractors or subcontractors, during any period of debarment, suspension, or placement in ineligibility status.

J. Conflict of Interest

In addition to the conflict of interest requirements in 24 CFR part 85, no person who is an employee, agent, consultant, officer, or elected or appointed official of the PHA and who exercises or has exercised any functions or responsibilities with respect to activities assisted under an HOPE VI grant, or who is in a position to participate in a decisionmaking process or gain inside information with regard to such activities, may obtain a financial interest or benefit from the activity, or have an interest in any contract, subcontract, or agreement with respect thereto, or the proceeds thereunder, either for himself or herself or for those with whom he or she has family or business ties, during his or her tenure or for one year thereafter.

2. HUD may grant an exception to the exclusion in paragraph (1) of this section on a case-by-case basis when it determines that such an exception will serve to further the purposes of the revitalization demonstration and the effective and efficient administration of the revitalization program. HUD will consider an exception only after the applicant or recipient has provided a disclosure of the nature of the conflict, accompanied by an assurance that there has been public disclosure of the conflict and a description of how the public disclosure was made, and an opinion of the applicant's or recipient's attorney that the interest for which the exception is sought would not violate State or local laws. In determining whether to grant a requested exception, HUD will consider the cumulative effect of the following factors, as applicable:

a. Whether the exception would provide a significant cost benefit or an essential degree of expertise to the revitalization program that would otherwise not be available;

b. Whether an opportunity was provided for open competitive bidding or negotiation;

c. Whether the person affected is a member of a group or class intended to be the beneficiaries of the activity, and the exception will permit such person to receive generally the same interest or benefits as are being made available or provided to the group or class;

d. Whether the affected person has withdrawn from his or her functions or responsibilities, or the decisionmaking process, with respect to the specific activity in question;

e. Whether the interest or benefit was present before the affected person was in a position as described in paragraph 1 of this section;

f. Whether undue hardship will result either to the applicant, recipient, or the person affected when weighed against the public interest served by avoiding the prohibited conflict; and

g. Any other relevant considerations.

K. Labor Standards

Where HOPE VI funds provide assistance with respect to low-income housing (including Section 8 housing) that will be subject to a contract for assistance under the U.S. Housing Act of 1937, Davis-Bacon or HUD-determined wage rates apply to development or operation of the housing to the extent required under section 12 of the Act. Under section 12, the wage rate requirements do not apply to individuals who: perform services for which they volunteered; do not receive compensation for those services or are paid expenses, reasonable benefits, or a nominal fee for the services; and are not otherwise employed in the work involved (24 CFR part 70). In addition, if other Federal programs are used in connection with the revitalization program, labor standards requirements apply to the extent required by such other Federal programs. For example, if CDBG program funds are used in connection with the revitalization program, the labor standards requirements of that program would apply with respect to the portion of work funded thereby.

L. Lead-Based Paint Testing and Abatement

Any property assisted under the revitalization program established under this NOFA constitutes HUD-associated housing for the purpose of the Lead-Based Paint Poisoning Prevention Act (42 U.S.C. 4821, et seq.) and is therefore subject to 24 CFR part 35; 24 CFR part 965, subpart H; and 24 CFR 968.110(k). Tenant-based assistance provided to PHAs under this program will be subject to 24 CFR 982.401 and 24 CFR part 35. Unless otherwise provided, recipients shall be responsible for testing and abatement activities.

M. Relocation

1. The requirements of the Uniform Relocation Assistance and Real Property Acquisition Policies Act of 1970 and government-wide implementing regulations at 49 CFR part 24 apply to this program.

2. Temporary Relocation. The recipient must provide each resident of an eligible property, who is required to relocate temporarily to permit work to be carried out, with suitable, decent, safe, and sanitary housing for the temporary period, and must reimburse the resident for all reasonable out-of-pocket expenses incurred in connection with the temporary relocation, including the costs of moving to and from the temporarily occupied housing and any increase in monthly costs of rent and utilities.

IX. Other Matters

A. Paperwork Reduction Act

The information collection requirements of this NOFA (including Forms HUD–52825–A and HUD–52820–A required by Sections K.1.a and M.3 of the NOFA) have been submitted to the Office of Management and Budget (OMB) for review and temporary approval under the Paperwork Reduction Act of 1995 (44 U.S.C. 3501–3520) and 5 CFR 1320.13. An agency may not conduct or sponsor, and a person is not required to respond to, a collection of information unless the collection displays a valid control number. The OMB control number, when assigned, will be announced by separate notice in the Federal Register.

In addition, in today's NOFA HUD is soliciting comments, as required under 5 CFR 1320.8(d), before submitting the information collection requirements contained in this NOFA to OMB for regular review in accordance with 5 CFR 1320.10. HUD is seeking comments from members of the public and affected agencies concerning the proposed collection of information to:

(1) Evaluate whether the proposed collection of information is necessary for the proper performance of the functions of the agency, including whether the information will have practical utility;

(2) Evaluate the accuracy of the agency's estimate of the burden of the proposed collection of information;

(3) Enhance the quality, utility, and clarity of the information to be collected; and

(4) Minimize the burden of the collection of information on those who are to respond; including through the use of appropriate automated collection techniques or other forms of information technology, e.g., permitting electronic submission of responses. Interested persons are invited to submit comments according to the instructions in the **DATES** and **ADDRESSES** sections of this NOFA.

This Notice also lists the following information:

Title of Proposal: NOFA for Public Housing Demolition, Site Revitalization, and Replacement Housing Grants (HOPE VI) (FR 4076).

*Description of the Need for the Information and Proposed Use:*This information collection is required in connection with the issuance of this NOFA, announcing the availability of approximately $480 million for grants public housing demolition, revitalization, and replacement housing.

Form Numbers: HUD–52820–A and HUD–52828–A

Members of Affected Public: Public housing agencies.

Estimation of the Total Number of Hours Needed to Prepare the Information Collection including Number of Respondents, Frequency of Response, and Hours of Response:

Submission requirements	Number of respondents	Number of responses	Total annual response	Hours per response	Total
Application	500	1	500	40	20,000
Demolition/Disposition Application	500	1	500	10	5,000
Resident Consultation	500	1	500	4	2,000
HOPE VI Budget Form HUD–52825–A	500	1	500	6	3,000
PHA Board Resolution for Submission of HOPE VI Application Form HUD–52820–A	500	1	500	1	500
Total Burden					30,500

Status of the Proposed Information Collection: Emergency processing request pending.

B. Environmental Review

A Finding of No Significant Impact with respect to the environment has been made in accordance with HUD regulations at 24 CFR part 50, implementing section 102(2)(C) of the National Environmental Policy Act of 1969 (42 U.S.C. 4332). The Finding of No Significant Impact is available for public inspection and copying between 7:30 am and 5:30 pm weekdays at the Office of the Rules Docket Clerk, 451 Seventh Street, SW., Room 10276, Washington, DC 20410.

C. Impact on the Family

The General Counsel, as the Designated Official for Executive Order 12606, *The Family*, has determined that the policies announced in this NOFA will not have the potential for significant impact on family formation, maintenance, and general well-being within the meaning of the order. No significant change in existing HUD policies and programs will result from the issuance of this NOFA, as those policies and programs relate to family concerns. To the extent that there is impact on the family, revitalization under this program can be expected to support families by enabling low-income families to live in decent, safe, and sanitary housing.

D. Federalism Impact

The General Counsel, as the Designated Official under section 6(a) of Executive Order 12612, *Federalism*, has determined that this NOFA will not have substantial, direct effects on States, on their political subdivisions, or on their relationship with the Federal Government, or on the distribution of power and responsibilities between them and other levels of government. While the NOFA offers financial assistance to units of general local government, none of its provisions will have an effect on the relationship between the Federal Government and the States, or the States' political subdivisions.

E. Accountability in the Provision of HUD Assistance

Section 102 of the Department of Housing and Urban Development Reform Act of 1989 (HUD Reform Act) and the final rule codified at 24 CFR part 4, subpart A, published on April 1, 1996 (61 FR 1448), contain a number of provisions that are designed to ensure greater accountability and integrity in the provision of certain types of assistance administered by HUD. On January 14, 1992, HUD published, at 57 FR 1942, a notice that also provides information on the implementation of section 102. The documentation, public access, and disclosure requirements of section 102 are applicable to assistance awarded under this NOFA as follows:

Documentation and public access requirements. HUD will ensure that documentation and other information regarding each application submitted pursuant to this NOFA are sufficient to indicate the basis upon which assistance was provided or denied. This material, including any letters of support, will be made available for public inspection for a five-year period beginning not less than 30 days after the award of the assistance. Material will be made available in accordance with the Freedom of Information Act (5 U.S.C. 552) and HUD's implementing regulations at 24 CFR part 15. In addition, HUD will include the recipients of assistance pursuant to this NOFA in its Federal Register notice of all recipients of HUD assistance awarded on a competitive basis.

Disclosures. HUD will make available to the public for five years all applicant disclosure reports (HUD Form 2880) submitted in connection with this NOFA. Update reports (also Form 2880) will be made available along with the applicant disclosure reports, but in no case for a period less than three years. All reports—both applicant disclosures and updates—will be made available in accordance with the Freedom of Information Act (5 U.S.C. 552) and HUD's implementing regulations at 24 CFR part 15.

F. Section 103 of the HUD Reform Act

HUD's regulation implementing section 103 of the Department of Housing and Urban Development Reform Act of 1989, codified as 24 CFR part 4, applies to the funding competition announced today. The requirements of the rule continue to apply until the announcement of the selection of successful applicants. HUD employees involved in the review of applications and in the making of funding decisions are limited by part 4 from providing advance information to any person (other than an authorized employee of HUD) concerning funding decisions, or from otherwise giving any applicant an unfair competitive advantage. Persons who apply for assistance in this competition should confine their inquiries to the subject areas permitted under 24 CFR part 4.

Applicants or employees who have ethics related questions should contact the HUD Office of Ethics (202) 708–3815. (This is not a toll-free number.) For HUD employees who have specific program questions, such as whether particular subject matter can be discussed with persons outside HUD, the employee should contact the appropriate Field Office Counsel, or Headquarters counsel for the program to which the question pertains.

G. Prohibition Against Lobbying Activities

The use of funds awarded under this NOFA is subject to the disclosure requirements and prohibitions of section 319 of the Department of Interior and Related Agencies Appropriations Act for Fiscal Year 1990 (31 U.S.C. 1352) (the Byrd Amendment) and the implementing regulations in 24 CFR part 87. These authorities prohibit recipients of Federal contracts, grants, or loans from using appropriated funds for lobbying the executive or legislative branches of the Federal Government in connection with a specific contract, grant, or loan. The prohibition also covers the awarding of contracts, grants, cooperative agreements, or loans unless the recipient has made an acceptable certification regarding lobbying. Under 24 CFR part 87, applicants, recipients,

and subrecipients of assistance exceeding $100,000 must certify that no Federal funds have been or will be spent on lobbying activities in connection with the assistance.

Dated: July 17, 1996.

Michael B. Janis,

General Deputy Assistant Secretary for Public Indian Housing.

[FR Doc. 96–18543 Filed 7–17–96; 3:59 pm]

BILLING CODE 4210–33–P

federal register

Monday
July 22, 1996

Part VII

Department of Justice

Bureau of Prisons

28 CFR Parts 552 and 571

Hostage Situation Management and Release Preparation Program; Regulations Revision; Final Rules

DEPARTMENT OF JUSTICE

Bureau of Prisons

28 CFR Part 552

[BOP–1061–F]

RIN 1120–AA55

Hostage Situation Management

AGENCY: Bureau of Prisons, Justice.

ACTION: Final rule.

SUMMARY: In this document, the Bureau of Prisons is revising its regulations on hostage situations to remove unnecessary or redundant procedural details. The intent of this amendment is the continued secure and efficient operation of the Bureau and its institutions.

EFFECTIVE DATE: July 22, 1996.

ADDRESSES: Office of General Counsel, Bureau of Prisons, HOLC Room 754, 320 First Street, NW., Washington, DC 20534.

FOR FURTHER INFORMATION CONTACT: Roy Nanovic, Office of General Counsel, Bureau of Prisons, phone (202) 514–6655.

SUPPLEMENTARY INFORMATION: The Bureau of Prisons is amending its regulations on hostage situations (28 CFR part 552, subpart D). A final rule on this subject was published in the Federal Register on October 25, 1990 (55 FR 39852).

The Bureau's regulations on hostage situations previously contained details relating to command structure (former § 552.31) and hostage family services (former § 552.34). For the reasons discussed below, the Bureau believes it unnecessary to retain these provisions in its regulations.

A hostage situation understandably may be considered an institutional emergency which poses a threat to human life or safety. Provisions in the regulations on the Bureau's purpose and scope in such situations (§ 552.30), on negotiations (former § 552.32), and on regard for orders by captive staff (former § 552.33) may well serve to deter the taking of hostages, in so far as those who might so intend have notice of the Bureau's resolve. These provisions have therefore been recodified as §§ 552.30 through 552.32. The provisions in former §§ 552.31 and 552.34 on command structure and on hostage family services do not serve this same purpose and are therefore deemed inappropriate for retention in the regulations. These provisions are more appropriately maintained in internal directives which may more efficiently respond to the specifics of a particular hostage situation. The cross reference provisions in former § 552.35 on the media are recodified as § 552.33.

Because these amendments are administrative in nature and do not impose additional restrictions on inmates, the Bureau finds good cause for exempting the provisions of the Administrative Procedure Act (5 U.S.C. 553) requiring notice of proposed rulemaking, the opportunity for public comment, and delay in effective date. Members of the public may submit comments concerning this rule by writing to the previously cited address. These comments will be considered but will receive no response in the Federal Register.

The Bureau of Prisons has determined that this rule is not a significant regulatory action for the purpose of E.O. 12866, and accordingly this rule was not reviewed by the Office of Management and Budget. After review of the law and regulations, the Director, Bureau of Prisons has certified that this rule, for the purpose of the Regulatory Flexibility Act (5 U.S.C. 601 et seq.), does not have a significant economic impact on a substantial number of small entities, within the meaning of the Act. Because this rule pertains to the correctional management of offenders committed to the custody of the Attorney General or the Director of the Bureau of Prisons, its economic impact is limited to the Bureau's appropriated funds.

List of Subjects in 28 CFR Part 552

Prisoners.

Kathleen M. Hawk,

Director, Bureau of Prisons.

Accordingly, pursuant to the rulemaking authority vested in the Attorney General in 5 U.S.C. 552(a) and delegated to the Director, Bureau of Prisons in 28 CFR 0.96(p), part 552 in subchapter C of 28 CFR, chapter V is amended as set forth below.

SUBCHAPTER C—INSTITUTIONAL MANAGEMENT

PART 552—CUSTODY

1. The authority citation for 28 CFR part 552 is revised to read as follows:

Authority: 5 U.S.C. 301; 18 U.S.C. 3621, 3622, 3624, 4001, 4042, 4081, 4082 (Repealed in part as to offenses committed on or after November 1, 1987), 5006–5024 (Repealed October 12, 1984 as to offenses committed after that date), 5039; 28 U.S.C. 509, 510; 28 CFR 0.95–0.99.

2. Subpart D of part 552 is revised to read as follows:

Subpart D—Hostage Situation Management

Sec.
552.30 Purpose and scope.
552.31 Negotiations.
552.32 Hostages
552.33 Media.

Subpart D—Hostage Situation Management

§ 552.30 Purpose and scope.

The Bureau of Prisons primary objectives in all hostage situations are to safely free the hostage(s) and to regain control of the institution.

§ 552.31 Negotiations.

The Warden is not ordinarily involved directly in the negotiation process. Instead, this responsibility is ordinarily assigned to a team of individuals specifically trained in hostage negotiation techniques.

(a) Negotiators have no decision-making authority in hostage situations, but rather serve as intermediaries between hostage takers and command center staff.

(b) During the negotiation process, the following items are non-negotiable: release of captors from custody, providing of weapons, exchange of hostages, and immunity from prosecution.

§ 552.32 Hostages.

Captive staff have no authority and their directives shall be disregarded.

§ 552.33 Media.

The Warden shall assign staff to handle all news releases and news media inquiries in accordance with the rule on Contact with News Media (see 28 CFR 540.65).

[FR Doc. 96–18554 Filed 7–19–96; 8:45 am]

BILLING CODE 4410–05–P

28 CFR Part 571

[BOP–1055–F]

RIN 1120–AA51

Release Preparation Program

AGENCY: Bureau of Prisons, Justice.

ACTION: Final rule.

SUMMARY: In this document, the Bureau of Prisons is revising its regulations on inmate release preparation to allow for exceptions at an administrative maximum security institution. This amendment is intended to provide for the continued secure, orderly, and efficient operation of the Bureau and its institutions.

EFFECTIVE DATE: July 22, 1996.

ADDRESSES: Office of General Counsel, Bureau of Prisons, HOLC Room 754, 320 First Street, NW., Washington, DC 20534.

FOR FURTHER INFORMATION CONTACT: Roy Nanovic, Office of General Counsel, Bureau of Prisons, phone (202) 514–6655.

SUPPLEMENTARY INFORMATION: The Bureau of Prisons is amending its regulations on the release preparation program (28 CFR part 571, subpart B). A final rule on this subject was published in the Federal Register July 11, 1994 (59 FR 35456).

Current regulations in § 571.10 affirm the establishment of a standardized release preparation program for all sentenced inmates reintegrating into the community from Bureau facilities. Inmates who have demonstrated an inability to function in a less restrictive environment without being a threat to others, or to the secure and orderly operation of the institution may be placed in an administrative maximum security facility. At present, the Bureau operates one administrative maximum security facility at Florence, Colorado (ADX Florence). Upon completion of the special programming at ADX Florence, an inmate ordinarily would be assigned to another Bureau institution before release.

Given the unique mission of ADX Florence and the problems posed by the behavior patterns of the inmates assigned to that institution, the Bureau deems it impracticable to require operation of the standardized release preparation program at that facility. Access to the full standardized release preparation program remains available at all other Bureau facilities and may serve as additional incentive for the inmate to complete special programming at the administrative maximum security institution. The Bureau is therefore amending § 571.10 to allow the Warden of an administrative maximum security institution to make exceptions to the standardized release preparation program.

Because these changes are necessary for the secure, orderly, and efficient correctional management of the institution and because they do not impose further restrictions on inmates beyond those appropriate to the security level, the Bureau finds good cause for exempting the provisions of the Administrative Procedure Act (5 U.S.C. 553) requiring notice of proposed rulemaking, the opportunity for public comment, and delay in effective date. Members of the public may submit comments concerning this rule by writing to the previously cited address. These comments will be considered but will receive no response in the Federal Register.

The Bureau of Prisons has determined that this rule is not a significant regulatory action for the purpose of E.O. 12866, and accordingly this rule was not reviewed by the Office of Management and Budget. After review of the law and regulations, the Director, Bureau of Prisons, has certified that this rule, for the purpose of the Regulatory Flexibility Act (Pub. L. 96–354), does not have a significant impact on a substantial number of small entities. Because this rule pertains to the correctional management of offenders committed to the custody of the Attorney General or the Director of the Bureau of Prisons, its economic impact is limited to the Bureau's appropriated funds.

List of Subjects in 28 CFR Part 571

Prisoners.

Kathleen M. Hawk,

Director, Bureau of Prisons.

Accordingly, pursuant to the rulemaking authority vested in the Attorney General in 5 U.S.C. 552(a) and delegated to the Director, Bureau of Prisons, in 28 CFR 0.96(p), part 571 in subchapter D of 28 CFR, chapter V is amended as set forth below.

SUBCHAPTER D—COMMUNITY PROGRAMS AND RELEASE

PART 571—RELEASE FROM CUSTODY

1. The authority citation for 28 CFR part 571 continues to read as follows:

Authority: 5 U.S.C. 301; 18 U.S.C. 3565, 3568–3569 (Repealed in part as to offenses committed on or after November 1, 1987), 3582, 3621, 3622, 3624, 4001, 4042, 4081, 4082 (Repealed in part as to offenses committed on or after November 1, 1987), 4161–4166 and 4201–4218 (Repealed as to offenses committed on or after November 1, 1987), 5006–5024 (Repealed October 12, 1984 as to offenses committed after that date), 5031–5042; 28 U.S.C. 509, 510; U.S. Const., Art. II, Sec. 2; 28 CFR 0.95–0.99, 1.1–1.10.

2. Section 571.10 is revised to read as follows:

§ 571.10 Purpose and scope.

The Bureau of Prisons recognizes that an inmate's preparation for release begins at initial commitment and continues throughout incarceration and until final release to the community. This subpart establishes a standardized release preparation program for all sentenced inmates reintegrating into the community from Bureau facilities. Exception to this subpart may be made by the Warden of a Bureau facility which has been designated as an administrative maximum security institution.

[FR Doc. 96–18553 Filed 7–19–96; 8:45 am]

BILLING CODE 4410–05–P

federal register

Monday
July 22, 1996

Part VIII

Department of Health and Human Services

Food and Drug Administration

21 CFR Parts 201 and 331

Drug Labeling; Sodium Labelling for Over-the-Counter Drugs; and Labelling of Orally Ingested Over-the-Counter Drug Products Containing Calcium, Magnesium, and Potassium; Extension of Comment Periods; Final and Proposed Rules

DEPARTMENT OF HEALTH AND HUMAN SERVICES

Food and Drug Administration

21 CFR Parts 201 and 331

[Docket No. 90N–0309]

RIN 0910–AA63

Drug Labeling; Sodium Labeling for Over-the-Counter Drugs; Extension of Comment Period

AGENCY: Food and Drug Administration, HHS.

ACTION: Final rule; extension of comment period.

SUMMARY: The Food and Drug Administration (FDA) is extending to September 20, 1996, the period for comments on amending the final rule for sodium labeling for over-the-counter (OTC) drug products that was published in the Federal Register of April 22, 1996. In the document, FDA asked for comments on whether the final rule should be amended to include sodium content labeling for OTC rectal laxative, vaginal, dentifrice, mouthwash, and mouth rinse drug products. FDA is taking this action in response to a request to extend the period for comments to allow interested persons additional time to comment on this matter.

DATES: Written comments by September 20, 1996.

ADDRESSES: Submit written comments to the Dockets Management Branch (HFA–305), Food and Drug Administration, 12420 Parklawn Dr., rm. 1–23, Rockville, MD 20857.

FOR FURTHER INFORMATION CONTACT: William E. Gilbertson, Center for Drug Evaluation and Research (HFD–105), Food and Drug Administration, 5600 Fishers Lane, Rockville, MD 20857, 301–827–2304.

SUPPLEMENTARY INFORMATION: In the Federal Register of April 22, 1996 (61 FR 17798), FDA issued a final rule on sodium labeling for OTC drug products with opportunity for comments on whether the final rule should be amended to include sodium content labeling for OTC rectal laxative, vaginal, dentifrice, mouthwash, and mouth rinse drug products. Interested persons were given until July 22, 1996, to submit comments on labeling for those products. The final rule amends the general labeling provisions for OTC drug products to: (1) Require that the sodium content of all OTC drug products intended for oral ingestion be included in labeling when the product contains 5 milligrams (mg) or more sodium per a single dose; (2) require that all OTC drug products intended for oral ingestion containing more than 140 mg sodium in the labeled maximum daily dose bear a general warning that persons who are on a sodium-restricted diet should not take the product unless directed by a doctor; and (3) provide for the voluntary use of certain terms (''sodium free,'' ''very low sodium,'' and ''low sodium'') relating to an OTC drug product's sodium content per labeled maximum daily dose. FDA issued the final rule in order to provide uniform sodium content labeling for all OTC drug products intended for oral ingestion (whether marketed under an OTC drug monograph, an approved application, or no application), and to provide for the voluntary use in OTC drug product labeling of the same terms used to describe sodium content in food labeling.

On June 18, 1996, Nonprescription Drug Manufacturers Association (NDMA), a trade association of nonprescription drug manufacturers, requested a 60-day extension to file comments and new information. NDMA stated that to fully address the issue of sodium labeling for OTC rectal laxative, vaginal, dentifrice, mouthwash, and mouth rinse drug products, its members needed this additional time because six different task groups needed to look at these drug classes in coordination with task groups from the Cosmetic, Toiletry and Fragrance Association. NDMA also raised a number of questions on the final rule, which FDA has answered in a recent feedback letter (Ref. 1).

FDA has carefully considered the request and acknowledges the broad scope of the proposal. The agency considers an extension of time for comments to be in the public interest. This will allow all interested persons additional time to evaluate whether products other than those intended for oral ingestion should be covered by the sodium labeling regulation. The agency is therefore extending the time for comment for an additional 60 days.

Interested persons may, on or before September 20, 1996, submit to the Dockets Management Branch (address above) written comments regarding sodium labeling for OTC rectal laxative, vaginal, dentifrice, mouthwash, and mouth rinse drug products. Three copies of any comments are to be submitted, except that individuals may submit one copy. Comments are to be identified with the docket number found in brackets in the heading of this document. Received comments may be seen in the office above between 9 a.m. and 4 p.m. Monday through Friday.

Reference

The following reference has been placed on display in the Dockets Management Branch (HFA–305), Food and Drug Administration, 12420 Parklawn Dr., rm. 1–23, Rockville, MD 20857, and may be seen by interested persons between 9 a.m. and 4 p.m., Monday through Friday.

(1) Letter from D. Bowen, FDA, to R. W. Soller, NDMA, July 15, 1996, in Docket No. 90N–0309 Dockets Management Branch.

Dated: July 15, 1996.

William K. Hubbard,

Associate Commissioner for Policy Coordination.

[FR Doc. 96–18437 Filed 7–19–96; 8:45 am]

BILLING CODE 4160–01–F

DEPARTMENT OF HEALTH AND HUMAN SERVICES

Food and Drug Administration

21 CFR Parts 201 and 331

[Docket No. 95N–0254]

RIN 0910–AA63

Labeling of Orally Ingested Over-the-Counter Drug Products Containing Calcium, Magnesium, and Potassium; Extension of Comment Period

AGENCY: Food and Drug Administration, HHS.

ACTION: Notice of proposed rulemaking; extension of comment period.

SUMMARY: The Food and Drug Administration (FDA) is extending to September 20, 1996, the comment period on the notice of proposed rulemaking to amend the general labeling provisions for over-the-counter (OTC) drug products intended for oral ingestion to require the content per dosage unit and warning labeling when the product contains certain levels of calcium, magnesium, or potassium. The notice of proposed rulemaking was published in the Federal Register of April 22, 1996 (61 FR 17807). FDA is taking this action in response to a request for extension of the comment period to allow interested persons additional time to comment on the notice of proposed rulemaking.

DATES: Written comments by September 20, 1996. Written comments on the agency's economic impact determination by September 20, 1996.

ADDRESSES: Submit written comments to the Dockets Management Branch (HFA–305), Food and Drug Administration, 12420 Parklawn Dr., rm. 1–23, Rockville, MD 20857.

FOR FURTHER INFORMATION CONTACT: William E. Gilbertson, Center for Drug Evaluation and Research (HFD–105), Food and Drug Administration, 5600 Fishers Lane, Rockville, MD 20857, 301–827–2304.

SUPPLEMENTARY INFORMATION: In the Federal Register of April 22, 1996 (61 FR 17807), FDA published a notice of proposed rulemaking to amend the general labeling provisions for OTC drug products to require that the labeling of all OTC drug products intended for oral ingestion include: (1) The calcium content per dosage unit when the product contains 20 milligrams (mg) or more per single dose; (2) a warning statement that persons with kidney stones and persons on a calcium-restricted diet should not take the product unless directed by a doctor when the product contains more than 3.2 grams of calcium in the labeled maximum daily dose; (3) the magnesium content per dosage unit when the product contains 8 mg or more per single dose; (4) a warning statement that persons with kidney disease and persons on a magnesium-restricted diet should not take the product unless directed by a doctor if the product contains more than 600 mg magnesium in the labeled maximum daily dose; (5) the potassium content per dosage unit when the product contains 5 mg or more per single dose; and (6) a warning statement that persons with kidney disease and persons on a potassium-restricted diet should not take the product unless directed by a doctor if the product contains more than 975 mg potassium in the labeled maximum daily dose. FDA issued the notice of proposed rulemaking in order to provide uniform calcium, magnesium, and potassium content and warning labeling for all OTC drug products intended for oral ingestion whether marketed under an OTC drug monograph, an approved application, or no application.

On June 18, 1996, Nonprescription Drug Manufacturers Association (NDMA), a trade association of nonprescription drug manufacturers, requested a 60-day extension in which to file comments and new information. NDMA noted FDA's request for comments on recent scientific information to consider in setting requirements for OTC drug product labeling for products containing these ingredients (cations), the potential far-reaching nature of the proposal, and what NDMA termed ''possible substantial economic impact'' as a basis for its request for an extension of the comment period. NDMA also had a number of questions on a related final rule for sodium labeling for OTC drug products published in the Federal Register of April 22, 1996 (61 FR 17798), which FDA has addressed in a recent feedback letter (Ref. 1).

FDA has carefully considered the request and acknowledges the broad scope of the notice of proposed rulemaking, which would affect products in several therapeutic categories. Manufacturers may require additional time to obtain information, including scientific information, and comment on the notice of proposed rulemaking. Although the agency has a policy of generally not extending such comment periods, FDA considers an extension of time for comments in this case to be in the public interest and is therefore extending the comment period for an additional 60 days.

Interested persons may, on or before September 20, 1996, submit to the Dockets Management Branch (address above) written comments on the notice of proposed rulemaking. Three copies of any comments are to be submitted, except that individuals may submit one copy. Comments are to be identified with the docket number found in the brackets in the heading of this document. Received comments may be seen in the office above between 9 a.m. and 4 p.m., Monday through Friday.

Reference

1. Letter from Debra Bowen, FDA, to R. W. Soller, NDMA, July 15, 1996, in Docket No. 95N–0254, Dockets Management Branch.

Dated: July 15, 1996.

William K. Hubbard,

Associate Commissioner for Policy Coordination.

[FR Doc. 96-18438 Filed 7–19–96; 8:45 am]

BILLING CODE 4160–01–F

Reader Aids

Federal Register

Vol. 61, No. 141

Monday, July 22, 1996

CUSTOMER SERVICE AND INFORMATION

Federal Register/Code of Federal Regulations

General Information, indexes and other finding aids **202–523–5227**

Laws

Public Laws Update Services (numbers, dates, etc.) **523–6641**
For additional information **523–5227**

Presidential Documents

Executive orders and proclamations **523–5227**
The United States Government Manual **523–5227**

Other Services

Electronic and on-line services (voice) **523–4534**
Privacy Act Compilation **523–3187**
TDD for the hearing impaired **523–5229**

ELECTRONIC BULLETIN BOARD

Free Electronic Bulletin Board service for Public Law numbers, Federal Register finding aids, and list of documents on public inspection. **202–275–0920**

FAX-ON-DEMAND

You may access our Fax-On-Demand service. You only need a fax machine and there is no charge for the service except for long distance telephone charges the user may incur. The list of documents on public inspection and the daily Federal Register's table of contents are available using this service. The document numbers are 7050-Public Inspection list and 7051-Table of Contents list. The public inspection list will be updated immediately for documents filed on an emergency basis.

NOTE: YOU WILL ONLY GET A LISTING OF DOCUMENTS ON FILE AND NOT THE ACTUAL DOCUMENT. Documents on public inspection may be viewed and copied in our office located at 800 North Capitol Street, N.W., Suite 700. The Fax-On-Demand telephone number is: **301–713–6905**

FEDERAL REGISTER PAGES AND DATES, JULY

33825–34366 1
34367–34712 2
34713–35082 3
35083–35588 5
35589–35914 8
35915–36276 9
36277–36492 10
36493–36608 11
36609–36808 12
36809–36988 15
36989–37198 16
37199–37350 17
37351–37656 18
37657–37806 19
37807–38048 22

CFR PARTS AFFECTED DURING JULY

At the end of each month, the Office of the Federal Register publishes separately a List of CFR Sections Affected (LSA), which lists parts and sections affected by documents published since the revision date of each title.

3 CFR

Proclamations:
6907 35083
6908 35587

Executive Orders:
13010 37347
13011 37657

Administrative Orders:
Presidential Determinations:
No. 96–34 of June 26, 1996 36493
No. 96–35 of June 26, 1996 36495
No. 96–36 of June 28, 1996 35075
No. 96–37 of June 29, 1996 36989
No. 96–38 of June 29, 1996 36991

4 CFR

28 36809
29 36809

5 CFR

530 34713
531 34713
532 36609
534 34713
550 34713
575 34713
581 34713
582 34713
630 34713
734 35088
890 37807
1001 36993
1660 36610
2634 35589
3201 35915
Ch. XXIII 35085
Ch. XXXV 36993
Ch. LXV 36246

Proposed Rules:
890 35973

7 CFR

2 37544
16 37199
29 .....37316, 37351
52 37663
58 35589
210 37670
225 37670
301 .....35102, 35107, 36811, 36812
400 34367
718 37544
719 37544
720 37544
723 37672
729 36997
790 37544
791 37544
793 37544
796 37544
868 34714
906 37810
916 37812
917 37812
946 35109
948 36813
958 35592
989 36814
997 35594
998 35594
1106 35596
1230 35597
1400 37544
1401 37544
1402 37544
1405 37544
1412 37544
1413 37544
1421 37544
1425 37544
1427 37544
1430 37544
1434 37544
1435 37544
1446 37544
1464 37672
1468 37544
1470 37544
1477 37544
1478 37544
1479 37544
1479 37544
1497 37544
1498 37544
1493 33825
1703 37813
1910 35916
1924 35916
1941 35916
1943 35916
1945 35916
1951 35916
1955 35916
1962 35916
1965 35916
1980 35916

Proposed Rules:
210 35152
220 35152
225 35152
226 35152
300 34379
301 38018
319 34379
868 35687
956 36827
1005 37628
1007 37628
1011 37628

1046....37628
1240....34385
1280....35982
1962....37405

8 CFR

103....35597
212....36610
214....35934
217....35598
264....37673
301....35111
Proposed Rules:
207....35984
208....35984

9 CFR

92....36816
112....33840
113....33840
201....36277, 36279
318....37675
381....37675
Proposed Rules:
1....34386
3....34386, 34389
11....34747
92....36520
93....36520
94....35987, 36520
95....36520
96....36520
98....36520
301....35990
304....35990
308....35990
318....35992
319....35157
320....35990
381....35157, 35990
391....34747

10 CFR

51....37351
53....35935
110....35600
205....3511
420....35890
430....36974
450....35890
463....35114
784....36611
1003....35112
1010....35085
1021....36222
Proposed Rules:
34....37019
1021....35990

12 CFR

324....33842
367....35115
1750....35607
Proposed Rules:
32....37227
205....37229
207....33874
218....34749
220....33874
221....33874
250....34749
327....34751
614....37230
745....36663

14 CFR

1....34508
25....34716
29....33963, 36965
39....33874, 34368, 34718, 35122, 35126, 35127, 35936, 35938, 35940, 35942, 35944, 35946, 36620, 36622, 36817, 37199, 37202, 37675, 37814
61....34508
71....33843 33844, 33845, 34720, 34721, 34722, 34723, 35307, 36283, 36284, 36285, 36286, 36820, 37001, 37113, 37204, 37205, 37352, 37677
73....35623
91....34508, 36286
95....37206
97....35623, 35624, 35626, 37352, 37354, 37356, 37677
119....35628
121....34508, 34927, 35628, 37222
125....34508
135....34508, 34927, 35628
141....34508
142....34508
211....34724
213....34724
Ch. III....37814
Proposed Rules:
25....35056, 37844
39....34767, 35691, 35693, 35695, 36307, 36308, 36310, 36664, 36667, 36669, 37019
71....34391, 34393, 34394, 34395, 34396, 34397, 34398, 34769, 35991, 36311, 36312, 36313, 36314, 36315, 36316, 36317, 36520, 37113, 37230, 37231, 37407, 37408
121....37144
125....37144
129....37144
135....37144

15 CFR

902....34570, 34930, 34966, 35145, 35548
923....36965
Proposed Rules:
30....36318
303....37845
922....33876

16 CFR

Proposed Rules:
303....35992

17 CFR

249....37357
Proposed Rules:
15....37409
16....37409
17....37409
18....37409
19....37409
240....36521, 37701
249....37701

19 CFR

10....33845
12....33845
102....33845, 37817
134....33845, 37678
201....37818
207....37818

21 CFR

14....36624
175....37208
176....37209
177....34370, 37210
178....33846
184....36287
201....38046
210....37679
211....37679
331....38046
452....34726
500....37680
505....37680
507....37680
508....37680
510....35949, 37680
520....34727
522....34727, 35129, 36290, 37682
529....34727
558....34727, 35949, 36291
570....37680
801....37682
Proposed Rules:
106....36154
107....36154
201....38047
331....38047

22 CFR

41....35628
126....36625
514....37002
608....36820

23 CFR

630....35629

24 CFR

0....36246
60....36462
200....36260
201....36260
202....36260, 36452
203....35024, 36260, 36452, 37798
206....35014, 36260
221....36260, 36452, 37798
233....36260
234....36260, 36452
280....36260
291....36260
570....36456
901....35633
941....35958, 38014

25 CFR

10....34371
211....35634
212....35634
700....35666
Proposed Rules:
5....36671
11....35158
12....35163
21....33876
45....34399
152....34400
169....37417
171....35167
256....36829
290....37022

26 CFR

301....37683
Proposed Rules:
1....35696, 36320
31....36320

27 CFR

18....37002
30....37002
53....37005
275....37005
Proposed Rules:
53....37022

28 CFR

42....34729
552....38042
571....38042
Proposed Rules:
16....37425
17....36679
31....34770
38 (2 documents)....37964, 37976
58....37426

29 CFR

1952....36824
2509....33847
2520....33847
2550....33847
Ch. XXVI....34002, 36626, 37316, 37795
Ch. XL....34002, 36626, 37316, 37795
4044....36968
Proposed Rules:
101....35172
102....35172
1910....37849
1926....37849
Ch. XIV....34405

30 CFR

56....36790
57....36790
256....34730
901....37382
913....37383
Proposed Rules:
206....37865
948....37023

31 CFR

321....37196
356....37007
515....37385
575....36627

32 CFR

66....38386
706....35958, 36291, 36497
Proposed Rules:
651....37865

33 CFR

100....36292
110....36786
116....36786
117....36786, 37211
120....37648
127....36629
128....37648
157....36786
158....36629
164....35064
165....35130, 35132, 37211,

37684
179....36629
181....36786
183....36629
334....34732
Proposed Rules:
117....35702
154....34775
155....34775
165....37714
167....35703

34 CFR

Proposed Rules:
75....37184
206....37184
231....37184
235....27184
369....27184
371....27184
373....27184
375....27184
376....27184
378....27184
380....27184
381....27184
385....27184
386....27184
387....27184
388....27184
389....27184
390....27184
396....27184
610....27184
612....27184
630....27184
637....27184
658....27184
660....27184
661....27184
669....27184

35 CFR

61....36497
123....36497

36 CFR

1....35133
13....35133
222....35959
223....35960
Proposed Rules:
1190....36688
1191....36688, 37964

37 CFR

2....36825
251....37213

38 CFR

1....33850
21....36629
Proposed Rules:
1....33878
17....37024

39 CFR

5....36498
7....36498
10....36498
20....36500
3001....37316

40 CFR

9....33851, 34202
52....36292, 36501, 36502, 37216, 37387, 37390, 37393, 37833
55....34202
63....34140, 36295
70....34733
71....34202
79....36506
80....35310, 35673, 35960
81....37833
180....34739, 34741, 36298, 36299, 37218, 37,395
257....34253
261....34252, 37397
271....34252
300....35137, 35962
425....35680
799....37685
Proposed Rules:
50....37427
51....35994, 36112
52....35998, 36004, 36320, 36534, 37030, 37232, 37428, 37429, 37875
55....36012
61....36326
63....36326, 36835
79....36535
80....34775
81....33879, 36004, 37875
82....37430
86....37715
90....34778
93....35994, 36112
136....36328
180....36329, 36331, 36689, 37233, 37433
185....37233
186....37233
260....33881
261....33881
262....33881
264....33881
268....33881
269....33881
271....33881
300....36858, 37435, 37875, 37877
425....35705
430....36835

41 CFR

201....35685

42 CFR

405....35307
413....37011
417....35307
431....35307
473....35307
498....35307
Proposed Rules:
410....34614
415....34614

43 CFR

1820....37686
3710....37116
Proposed Rules:
11....37031
4700....36333

44 CFR

62....36513, 37687
64....36514
65....33852, 33854
67....33856
Proposed Rules:
67....33882

45 CFR

Proposed Rules:
232....37236
235....37236

46 CFR

42....35963
76....35138
108....36786
110....36786
111....35927, 36608, 36786
112....36786
113....36786
161....36786
167....35138
514....35685
Proposed Rules:
10....36543, 36608
15....36543, 36608

47 CFR

Ch. I....35964
1....36629
20....33859
22....34375
24....33850
36....34375
61....36515, 36653
64....36629, 36653
66....36654
73....34368, 34743, 34744, 35139, 36302, 37840
90....34375
Proposed Rules:
Ch. I....34405
1....37241
73....34406, 34407, 34784, 34785, 35705, 37241, 37715, 37716, 37717
76....34408, 34409

48 CFR

225....37841
231....36305
252....37841
Proposed Rules:
219....37878
252....37878
401....37032
453....37032

49 CFR

1....34745
40....37015, 37222, 37693
192....35139, 36825
193....36825
195....36825
199....37222
219....37222
225....37842
233....33871
235....33871
236....33871
382....37222
571....33891, 36516, 36655
575....36655
653....37222
654....37222
1150....36965
1300....35139
1305....35141
Proposed Rules:
1....33886
8....33886
192....34410, 34413
195....34410, 34413
393....36691
397....36016
571....36334, 36698

50 CFR

Ch. III....35548
246....35548
280....35548
281....35548
282....35548
298....35548
299....35548
600....37225
622....34930
625....34966
630....34746, 35971, 37842
638....34930
641....34930
642....34785
645....34930
646....34930
647....34930
648....34966, 35142
650....34966
651....34966
652....34966
653....34930
655....34966
657....34966
658....34930
659....34930
660....34570, 35143, 35144, 36662, 37843
661....34570
663....34570
669....34930
670....34930
679....34377, 36306, 37225, 37226, 37403, 37404, 37700, 37843
680....34570
681....34570, 35145
683....34570
685....34570
695....35548
697....34746
Proposed Rules:
17....36020, 36021, 36346, 37034
20....37994
229....37035
642....34785
648....37241, 37436
679....35174, 36702, 37041

REMINDERS

The items in this list were editorially compiled as an aid to Federal Register users. Inclusion or exclusion from this list has no legal significance.

RULES GOING INTO EFFECT TODAY

AGRICULTURE DEPARTMENT

Agricultural Marketing Service

Cotton research and promotion order:
- Imported cotton and cotton content of imported products; supplemental assessment calculation; published 6-21-96

Nectarines and peaches grown in California; published 6-20-96

AGRICULTURE DEPARTMENT

Animal and Plant Health Inspection Service

Exportation and importation of animals and animal products:
- Bird quarantine facilities, privately owned; screening; published 6-20-96

Viruses, serums, toxins, etc.:
- Rabies vaccines; killed and live viruses; published 6-21-96

DEFENSE DEPARTMENT

Acquisition regulations:
- Petroleum products; published 7-22-96

ENVIRONMENTAL PROTECTION AGENCY

Air quality implementation plans; approval and promulgation; various States:
- North Carolina; published 5-23-96
- Washington; published 5-23-96

Clean Air Act:
- State operating permits programs--
  - Interim approval criteria; published 6-20-96

Hazardous waste program authorizations:
- Kentucky; published 5-23-96
- Tennessee; published 5-23-96

FEDERAL COMMUNICATIONS COMMISSION

Radio stations; table of assignments:
- Florida; published 7-22-96

HOUSING AND URBAN DEVELOPMENT DEPARTMENT

Community development block grants:
- Small cities and insular areas; published 6-21-96

HUD-owned properties:
- Sale of HUD-held multifamily mortgages; published 6-21-96

Low income housing:
- HOME investment partnerships program
  - Indian HOME program streamlining; published 6-21-96

INTERIOR DEPARTMENT

Indian Affairs Bureau

Tribal government:
- Indian child protection and family violence prevention; published 6-21-96

INTERIOR DEPARTMENT

Fish and Wildlife Service

Hunting and fishing:
- Open areas list additions; published 6-20-96

Importation, exportation, and transportation of wildlife:
- Miscellaneous amendments; published 6-21-96

JUSTICE DEPARTMENT

Prisons Bureau

Inmate control, custody, care, etc.:
- Hostage situation management; published 7-22-96
- Release preparation program; published 7-22-96

TRANSPORTATION DEPARTMENT

Coast Guard

Drawbridge operations:
- North Carolina; published 6-20-96

Regattas and marine parades:
- Kennewick, Washington, Columbia Unlimited Hydroplane Races; published 5-6-96

TRANSPORTATION DEPARTMENT

Federal Aviation Administration

Airworthiness directives:
- Boeing; published 7-5-96
- British Aerospace; published 7-17-96

Organization, functions, and authority delegations:
- Commercial Space Transportation; CFR chapter III name change; published 7-22-96

TRANSPORTATION DEPARTMENT

Research and Special Programs Administration

Pipeline safety:
- Natural gas transportation, etc.--
  - Service lines; excess flow valve performance standards; published 6-20-96

TREASURY DEPARTMENT

Customs Service

Uruguay Round Agreements Act (URAA):
- Textiles and textile products; country of origin determination; published 7-22-96

VETERANS AFFAIRS DEPARTMENT

Adjudication; pensions, compensation, dependency, etc.:
- Disability or death resulting from hospitalization, treatment, examination, or vocational rehabilitation; compensation; published 5-23-96

COMMENTS DUE NEXT WEEK

AGRICULTURE DEPARTMENT

Agricultural Marketing Service

Onions (sweet) grown in Washington and Oregon; comments due by 7-30-96; published 7-15-96

AGRICULTURE DEPARTMENT

Animal and Plant Health Inspection Service

Exportation and importation of animals and animal products:
- African swine fever; disease status change--
  - Spain; comments due by 7-29-96; published 5-29-96

Plant-related quarantine, foreign:
- Fruits and vegetables; importation; comments due by 8-1-96; published 7-2-96

AGRICULTURE DEPARTMENT

Federal Crop Insurance Corporation

Crop insurance regulations:
- Sugar beets; comments due by 7-30-96; published 5-31-96

AGRICULTURE DEPARTMENT

Farm Service Agency

Program regulations:
- Personal property--
  - Post bankruptcy loan servicing notices; comments due by 8-2-96; published 7-18-96

AGRICULTURE DEPARTMENT

Food Safety and Inspection Service

Meat and poultry inspection:
- Fee increases; comments due by 8-2-96; published 7-3-96

AGRICULTURE DEPARTMENT

Rural Business-Cooperative Service

Program regulations:
- Personal property--
  - Post bankruptcy loan servicing notices; comments due by 8-2-96; published 7-18-96

AGRICULTURE DEPARTMENT

Rural Housing Service

Program regulations:
- Personal property--
  - Post bankruptcy loan servicing notices; comments due by 8-2-96; published 7-18-96

AGRICULTURE DEPARTMENT

Rural Utilities Service

Program regulations:
- Personal property--
  - Post bankruptcy loan servicing notices; comments due by 8-2-96; published 7-18-96

COMMERCE DEPARTMENT

National Oceanic and Atmospheric Administration

Fishery conservation and management:
- Caribbean, Gulf of Mexico, and South Atlantic fisheries; comments due by 8-2-96; published 7-3-96

DEFENSE DEPARTMENT

Army Department

Military traffic management:
- Motor common carriers of perishable subsistence and bulk fuel; cargo insurance requirements; comments due by 7-29-96; published 6-27-96

DEFENSE DEPARTMENT

Federal Acquisition Regulation (FAR):
- Final indirect cost rates; comments due by 7-29-96; published 5-28-96

EDUCATION DEPARTMENT

Educational research and improvement:

Exemplary and promising programs designation; conduct standards and activities evaluation; comments due by 8-2-96; published 6-3-96

ENERGY DEPARTMENT

Federal Energy Regulatory Commission

Electric utilities (Federal Power Act):

Capacity reservation open access transmission tariffs; comments due by 8-1-96; published 5-10-96

ENVIRONMENTAL PROTECTION AGENCY

Air pollutants, hazardous; national emission standards:

Nonhandheld new nonroad phase I small spark-ignition engines, class I and II; carbon monoxide standard; comments due by 8-2-96; published 7-3-96

Air programs; fuels and fuel additives:

Reformulated gasoline program; alternative analytical test methods use; comments due by 8-2-96; published 7-3-96

Air quality implementation plans; approval and promulgation; various States:

Alaska; comments due by 7-29-96; published 6-28-96

Georgia; comments due by 7-29-96; published 6-27-96

Kentucky; comments due by 7-29-96; published 6-28-96

Pennsylvania; comments due by 8-2-96; published 7-16-96

Air quality planning purposes; designation of areas:

Washington; comments due by 7-31-96; published 7-1-96

Hazardous waste:

Hazardous waste management system--

Contaminated media; management requirements; comments due by 7-29-96; published 4-29-96

Management facilities; solid waste management units (SWMUs), corrective action; comments due by 7-30-96; published 5-1-96

Pesticides; tolerances in food, animal feeds, and raw agricultural commodities:

Dicofol, etc.; comments due by 7-30-96; published 5-29-96

Pesticide chemicals; various tolerance actions; comments due by 7-29-96; published 5-29-96

FEDERAL COMMUNICATIONS COMMISSION

Radio stations; table of assignments:

California; comments due by 7-29-96; published 6-17-96

Hawaii; comments due by 7-29-96; published 6-19-96

New York; comments due by 7-29-96; published 6-19-96

South Carolina; comments due by 7-29-96; published 6-20-96

South Dakota; comments due by 7-29-96; published 6-20-96

Wisconsin; comments due by 7-29-96; published 6-17-96

FEDERAL RESERVE SYSTEM

Availability of funds and collection of checks (Regulation CC):

Miscellaneous amendments; comments due by 8-2-96; published 6-3-96

Electronic fund transfers (Regulation E):

Home banking services disclosure, new accounts error resolution and stored-value cards, etc.; comments due by 8-1-96; published 5-2-96

Loan guarantees for defense production (Regulation V); comments due by 7-29-96; published 5-28-96

Securities credit transactions (Regulations G, T, and U); comments due by 8-2-96; published 5-6-96

Securities:

Relations with dealers in securities under section 32, 1933 Banking Act (Regulation R); and miscellaneous interpretations; comments due by 8-2-96; published 7-3-96

HEALTH AND HUMAN SERVICES DEPARTMENT

Food and Drug Administration

Animal drugs, feeds, and related products:

Extralabel drug use in animals; comments due by 7-31-96; published 5-17-96

Chlorofluorocarbons and other ozone-depleting substances, products containing or manufactured with; warning statements; comments due by 8-1-96; published 5-3-96

Human drugs:

Antibiotic drugs--

Clarithromycin granules for oral suspension; comments due by 8-2-96; published 7-3-96

Current good manufacturing practice--

Finished pharmaceuticals; manufacturing, quality control, and documentation requirements; comments due by 8-1-96; published 5-3-96

HEALTH AND HUMAN SERVICES DEPARTMENT

Health Care Financing Administration

Medicare:

Hospital inpatient prospective payment systems and FY 1997 rates; comments due by 7-30-96; published 5-31-96

INTERIOR DEPARTMENT

Indian Affairs Bureau

BIA rules applicability; comments due by 8-2-96; published 6-3-96

Energy and minerals:

Ute Indian Tribe's undivided tribal assets on Uintah and Ouray Reservation, UT; management by Tribe and Ute Distribution Corporation; comments due by 8-2-96; published 6-3-96

Indian Self-Determination and Education Assistance Act program:

Contracts, grants, school construction contracts, etc.; comments due by 8-2-96; published 6-3-96

Land and water:

Land records and title documents; comments due by 8-2-96; published 6-3-96

INTERIOR DEPARTMENT

Fish and Wildlife Service

Migratory bird hunting:

Early-season regulations (1996-1997); proposed frameworks; comments due by 8-1-96; published 7-22-96

INTERIOR DEPARTMENT

Minerals Management Service

Royalty management:

Royalty relief for producing leases and existing leases in deep water; comments due by 7-30-96; published 5-31-96

INTERIOR DEPARTMENT

Surface Mining Reclamation and Enforcement Office

Federal regulatory review:

Permanent program and abandoned mine land reclamation plan submissions; comments due by 7-29-96; published 5-28-96

Permanent program and abandoned mine land reclamation plan submissions:

West Virginia; comments due by 7-31-96; published 7-16-96

NATIONAL LABOR RELATIONS BOARD

Procedural rules:

Attorneys or party representatives; misconduct before agency; comments due by 8-2-96; published 6-17-96

SECURITIES AND EXCHANGE COMMISSION

Securities:

Executive and director compensation disclosure; streamlining and consolidation; comments due by 7-29-96; published 6-14-96

TRANSPORTATION DEPARTMENT

Coast Guard

Federal regulatory review:

Lifesaving equipment; comments due by 7-31-96; published 5-20-96

TRANSPORTATION DEPARTMENT

Omnibus Transportation Employee Testing Act of 1991:

Workplace drug and alcohol testing programs--

Drug and alcohol procedural rules; update; comments due by 7-29-96; published 4-29-96

TRANSPORTATION DEPARTMENT

Federal Aviation Administration

Airworthiness directives:

de Havilland; comments due by 7-29-96; published 7-3-96

Boeing; comments due by 7-29-96; published 6-19-96

Don Luscombe Aviation History Foundation; comments due by 7-31-96; published 5-29-96

Gulfstream; comments due by 8-2-96; published 6-24-96

Israel Aircraft Industries, Ltd.; comments due by 7-29-96; published 5-29-96

McDonnell Douglas; comments due by 7-29-96; published 6-19-96

SAAB; comments due by 7-30-96; published 5-31-96

Twin Commander Aircraft Corp.; comments due by 7-29-96; published 6-6-96

Airworthiness standards:

Special conditions--

Cessna 500, 550, and S550 airplanes; comments due by 8-2-96; published 7-3-96

Class E airspace; comments due by 7-29-96; published 6-27-96

VOR Federal airways; comments due by 7-29-96; published 6-17-96

TRANSPORTATION DEPARTMENT

Federal Highway Administration

Motor carrier safety standards:

Practice rules for proceedings, investigations, and disqualifications and penalties; comments due by 7-29-96; published 4-29-96

TRANSPORTATION DEPARTMENT

Research and Special Programs Administration

Hazardous materials:

Performance-oriented packaging standards; final transitional provisions; comments due by 8-2-96; published 6-26-96

TREASURY DEPARTMENT

Bank Secrecy Act:

Currency and foreign transactions; financial reporting and recordkeeping requirements--

Exemptions from currency transaction reporting; comments due by 8-1-96; published 4-24-96

LIST OF PUBLIC LAWS

This is a list of public bills from the 104th Congress which have become Federal laws. It may be used in conjunction with ''P L U S'' (Public Laws Update Service) on 202–523–6641. The text of laws is not published in the **Federal Register** but may be ordered in individual pamphlet form (referred to as ''slip laws'') from the Superintendent of Documents, U.S. Government Printing Office, Washington, DC 20402 (phone, 202–512–2470).

H.R. 2070/P.L. 104–161

To provide for the distribution within the United States of the United States Information Agency film entitled ''Fragile Ring of Life''. (July 18, 1996; 110 Stat. 1413)

H.R. 2853/P.L. 104–162

To authorize the extension of nondiscriminatory treatment (most-favored-nation treatment) to the products of Bulgaria. (July 18, 1996; 110 Stat. 1414)

Last List July 12, 1996

CFR CHECKLIST

This checklist, prepared by the Office of the Federal Register, is published weekly. It is arranged in the order of CFR titles, stock numbers, prices, and revision dates.

An asterisk (*) precedes each entry that has been issued since last week and which is now available for sale at the Government Printing Office.

A checklist of current CFR volumes comprising a complete CFR set, also appears in the latest issue of the LSA (List of CFR Sections Affected), which is revised monthly.

The annual rate for subscription to all revised volumes is $883.00 domestic, $220.75 additional for foreign mailing.

Mail orders to the Superintendent of Documents, Attn: New Orders, P.O. Box 371954, Pittsburgh, PA 15250–7954. All orders must be accompanied by remittance (check, money order, GPO Deposit Account, VISA, or Master Card). Charge orders may be telephoned to the GPO Order Desk, Monday through Friday, at **(202) 512–1800** from 8:00 a.m. to 4:00 p.m. eastern time, or FAX your charge orders to **(202) 512-2250**.

Title	Stock Number	Price	Revision Date
1, 2 (2 Reserved)	(869–028–00001–1)	$4.25	Feb. 1, 1996
3 (1995 Compilation and Parts 100 and 101)	(869–028–00002–9)	22.00	[1] Jan. 1, 1996
4	(869–028–00003–7)	5.50	Jan. 1, 1996
5 Parts:			
1–699	(869–028–00004–5)	26.00	Jan. 1, 1996
700–1199	(869–028–00005–3)	20.00	Jan. 1, 1996
1200–End, 6 (6 Reserved)	(869–028–00006–1)	25.00	Jan. 1, 1996
7 Parts:			
0–26	(869–028–00007–0)	22.00	Jan. 1, 1996
27–45	(869–028–00008–8)	11.00	Jan. 1, 1996
46–51	(869–028–00009–6)	13.00	Jan. 1, 1996
52	(869–028–00010–0)	5.00	Jan. 1, 1996
53–209	(869–028–00011–8)	17.00	Jan. 1, 1996
210–299	(869–028–00012–6)	35.00	Jan. 1, 1996
300–399	(869–028–00013–4)	17.00	Jan. 1, 1996
400–699	(869–028–00014–2)	22.00	Jan. 1, 1996
700–899	(869–028–00015–1)	25.00	Jan. 1, 1996
900–999	(869–028–00016–9)	30.00	Jan. 1, 1996
1000–1199	(869–028–00017–7)	35.00	Jan. 1, 1996
1200–1499	(869–028–00018–5)	29.00	Jan. 1, 1996
1500–1899	(869–028–00019–3)	41.00	Jan. 1, 1996
1900–1939	(869–028–00020–7)	16.00	Jan. 1, 1996
1940–1949	(869–028–00021–5)	31.00	Jan. 1, 1996
1950–1999	(869–028–00022–3)	39.00	Jan. 1, 1996
2000–End	(869–028–00023–1)	15.00	Jan. 1, 1996
8	(869–028–00024–0)	23.00	Jan. 1, 1996
9 Parts:			
1–199	(869–028–00025–8)	30.00	Jan. 1, 1996
200–End	(869–028–00026–6)	25.00	Jan. 1, 1996
10 Parts:			
0–50	(869–028–00027–4)	30.00	Jan. 1, 1996
51–199	(869–028–00028–2)	24.00	Jan. 1, 1996
200–399	(869–028–00029–1)	5.00	Jan. 1, 1996
400–499	(869–028–00030–4)	21.00	Jan. 1, 1996
500–End	(869–028–00031–2)	34.00	Jan. 1, 1996
11	(869–028–00032–1)	15.00	Jan. 1, 1996
12 Parts:			
1–199	(869–028–00033–9)	12.00	Jan. 1, 1996
200–219	(869–028–00034–7)	17.00	Jan. 1, 1996
220–299	(869–028–00035–5)	29.00	Jan. 1, 1996
300–499	(869–028–00036–3)	21.00	Jan. 1, 1996
500–599	(869–028–00037–1)	20.00	Jan. 1, 1996
600–End	(869–028–00038–0)	31.00	Jan. 1, 1996
13	(869–028–00039–8)	18.00	Mar. 1, 1996
14 Parts:			
1–59	(869–028–00040–1)	34.00	Jan. 1, 1996
60–139	(869–028–00041–0)	30.00	Jan. 1, 1996
140–199	(869–028–00042–8)	13.00	Jan. 1, 1996
200–1199	(869–028–00043–6)	23.00	Jan. 1, 1996
1200–End	(869–028–00044–4)	16.00	Jan. 1, 1996
15 Parts:			
0–299	(869–028–00045–2)	16.00	Jan. 1, 1996
300–799	(869–028–00046–1)	26.00	Jan. 1, 1996
800–End	(869–028–00047–9)	18.00	Jan. 1, 1996
16 Parts:			
0–149	(869–028–00048–7)	6.50	Jan. 1, 1996
150–999	(869–028–00049–5)	19.00	Jan. 1, 1996
1000–End	(869–028–00050–9)	26.00	Jan. 1, 1996
17 Parts:			
1–199	(869–028–00052–5)	21.00	Apr. 1, 1996
200–239	(869–028–00053–3)	25.00	Apr. 1, 1996
240–End	(869–028–00054–1)	31.00	Apr. 1, 1996
18 Parts:			
1–149	(869–028–00055–0)	17.00	Apr. 1, 1996
150–279	(869–028–00056–8)	12.00	Apr. 1, 1996
280–399	(869–028–00057–6)	13.00	Apr. 1, 1996
400–End	(869–028–00058–4)	11.00	Apr. 1, 1996
19 Parts:			
1–140	(869–026–00061–1)	25.00	Apr. 1, 1995
*141–199	(869–028–00060–6)	23.00	Apr. 1, 1996
200–End	(869–028–00061–4)	12.00	Apr. 1, 1996
20 Parts:			
1–399	(869–026–00064–6)	20.00	Apr. 1, 1995
*400–499	(869–028–00063–1)	35.00	Apr. 1, 1996
500–End	(869–028–00064–9)	32.00	Apr. 1, 1996
21 Parts:			
1–99	(869–026–00067–1)	16.00	Apr. 1, 1995
100–169	(869–026–00068–9)	21.00	Apr. 1, 1995
170–199	(869–026–00069–7)	22.00	Apr. 1, 1995
200–299	(869–028–00068–1)	7.00	Apr. 1, 1996
300–499	(869–026–00071–9)	39.00	Apr. 1, 1995
500–599	(869–026–00072–7)	22.00	Apr. 1, 1995
600–799	(869–026–00073–5)	9.50	Apr. 1, 1995
800–1299	(869–026–00074–3)	23.00	Apr. 1, 1995
1300–End	(869–026–00075–1)	13.00	Apr. 1, 1995
22 Parts:			
1–299	(869–026–00076–0)	33.00	Apr. 1, 1995
300–End	(869–028–00075–4)	24.00	Apr. 1, 1996
23	(869–026–00078–6)	22.00	Apr. 1, 1995
24 Parts:			
0–199	(869–026–00079–4)	40.00	Apr. 1, 1995
200–219	(869–026–00080–8)	19.00	Apr. 1, 1995
220–499	(869–026–00081–6)	23.00	Apr. 1, 1995
500–699	(869–026–00082–4)	20.00	Apr. 1, 1995
700–899	(869–026–00083–2)	24.00	Apr. 1, 1995
900–1699	(869–026–00084–1)	24.00	Apr. 1, 1995
1700–End	(869–026–00085–9)	17.00	Apr. 1, 1995
***25**	(869–028–00084–3)	32.00	Apr. 1, 1996
26 Parts:			
§§ 1.0-1–1.60	(869–028–00085–1)	21.00	Apr. 1, 1996
*§§ 1.61–1.169	(869–028–00086–0)	34.00	Apr. 1, 1996
*§§ 1.170–1.300	(869–028–00087–8)	24.00	Apr. 1, 1996
§§ 1.301–1.400	(869–028–00088–6)	17.00	Apr. 1, 1996
§§ 1.401–1.440	(869–026–00091–3)	30.00	Apr. 1, 1995
§§ 1.441-1.500	(869-028-00090-8)	22.00	Apr. 1, 1996
§§ 1.501–1.640	(869–028–00091–6)	21.00	Apr. 1, 1996
§§ 1.641–1.850	(869–028–00092–4)	25.00	Apr. 1, 1996
§§ 1.851–1.907	(869–026–00095–6)	26.00	Apr. 1, 1995
§§ 1.908–1.1000	(869–028–00094–1)	26.00	Apr. 1, 1996
§§ 1.1001–1.1400	(869–028–00095–9)	26.00	Apr. 1, 1996
§§ 1.1401–End	(869–028–00096–7)	35.00	Apr. 1, 1996
2–29	(869–028–00097–5)	28.00	Apr. 1, 1996
30–39	(869–028–00098–3)	20.00	Apr. 1, 1996
40–49	(869–026–00101–4)	14.00	Apr. 1, 1995
50–299	(869–028–00100–9)	14.00	Apr. 1, 1996
300–499	(869–028–00101–7)	25.00	Apr. 1, 1996

Title	Stock Number	Price	Revision Date
500–599	(869–028–00102–5)	6.00	[4] Apr. 1, 1990
*600–End	(869–028–00103–3)	8.00	Apr. 1, 1996
27 Parts:			
1–199	(869–026–00106–5)	37.00	Apr. 1, 1995
200–End	(869–028–00105–0)	13.00	Apr. 1, 1996
28 Parts:			
1-42	(869–026–00108–1)	27.00	July 1, 1995
43-end	(869-026-00109-0)	22.00	July 1, 1995
29 Parts:			
0–99	(869–026–00110–3)	21.00	July 1, 1995
100–499	(869–026–00111–1)	9.50	July 1, 1995
500–899	(869–026–00112–0)	36.00	July 1, 1995
900–1899	(869–026–00113–8)	17.00	July 1, 1995
1900–1910 (§§ 1901.1 to 1910.999)	(869–026–00114–6)	33.00	July 1, 1995
1910 (§§ 1910.1000 to end)	(869–026–00115–4)	22.00	July 1, 1995
1911–1925	(869–026–00116–2)	27.00	July 1, 1995
1926	(869–026–00117–1)	35.00	July 1, 1995
1927–End	(869–026–00118–9)	36.00	July 1, 1995
30 Parts:			
1–199	(869–026–00119–7)	25.00	July 1, 1995
200–699	(869–026–00120–1)	20.00	July 1, 1995
700–End	(869–026–00121–9)	30.00	July 1, 1995
31 Parts:			
0–199	(869–026–00122–7)	15.00	July 1, 1995
200–End	(869–026–00123–5)	25.00	July 1, 1995
32 Parts:			
1–39, Vol. I		15.00	[2] July 1, 1984
1–39, Vol. II		19.00	[2] July 1, 1984
1–39, Vol. III		18.00	[2] July 1, 1984
1–190	(869–026–00124–3)	32.00	July 1, 1995
191–399	(869–026–00125–1)	38.00	July 1, 1995
400–629	(869–026–00126–0)	26.00	July 1, 1995
630–699	(869–026–00127–8)	14.00	[5] July 1, 1991
700–799	(869–026–00128–6)	21.00	July 1, 1995
800–End	(869–026–00129–4)	22.00	July 1, 1995
33 Parts:			
1–124	(869–026–00130–8)	20.00	July 1, 1995
125–199	(869–026–00131–6)	27.00	July 1, 1995
200–End	(869–026–00132–4)	24.00	July 1, 1995
34 Parts:			
1–299	(869–026–00133–2)	25.00	July 1, 1995
300–399	(869–026–00134–1)	21.00	July 1, 1995
400–End	(869–026–00135–9)	37.00	July 5, 1995
35	(869–026–00136–7)	12.00	July 1, 1995
36 Parts			
1–199	(869–026–00137–5)	15.00	July 1, 1995
200–End	(869–026–00138–3)	37.00	July 1, 1995
37	(869–026–00139–1)	20.00	July 1, 1995
38 Parts:			
0–17	(869–026–00140–5)	30.00	July 1, 1995
18–End	(869–026–00141–3)	30.00	July 1, 1995
39	(869–026–00142–1)	17.00	July 1, 1995
40 Parts:			
1–51	(869–026–00143–0)	40.00	July 1, 1995
52	(869–026–00144–8)	39.00	July 1, 1995
53–59	(869–026–00145–6)	11.00	July 1, 1995
60	(869-026-00146-4)	36.00	July 1, 1995
61–71	(869–026–00147–2)	36.00	July 1, 1995
72–85	(869–026–00148–1)	41.00	July 1, 1995
86	(869–026–00149–9)	40.00	July 1, 1995
87–149	(869–026–00150–2)	41.00	July 1, 1995
150–189	(869–026–00151–1)	25.00	July 1, 1995
190–259	(869–026–00152–9)	17.00	July 1, 1995
260–299	(869–026–00153–7)	40.00	July 1, 1995
300–399	(869–026–00154–5)	21.00	July 1, 1995
400–424	(869–026–00155–3)	26.00	July 1, 1995
425–699	(869–026–00156–1)	30.00	July 1, 1995
700–789	(869–026–00157–0)	25.00	July 1, 1995
790–End	(869–026–00158–8)	15.00	July 1, 1995
41 Chapters:			
1, 1–1 to 1–10		13.00	[3] July 1, 1984
1, 1–11 to Appendix, 2 (2 Reserved)		13.00	[3] July 1, 1984
3–6		14.00	[3] July 1, 1984
7		6.00	[3] July 1, 1984
8		4.50	[3] July 1, 1984
9		13.00	[3] July 1, 1984
10–17		9.50	[3] July 1, 1984
18, Vol. I, Parts 1–5		13.00	[3] July 1, 1984
18, Vol. II, Parts 6–19		13.00	[3] July 1, 1984
18, Vol. III, Parts 20–52		13.00	[3] July 1, 1984
19–100		13.00	[3] July 1, 1984
1–100	(869–026–00159–6)	9.50	July 1, 1995
101	(869–026–00160–0)	29.00	July 1, 1995
102–200	(869–026–00161–8)	15.00	July 1, 1995
201–End	(869–026–00162–6)	13.00	July 1, 1995
42 Parts:			
1–399	(869–026–00163–4)	26.00	Oct. 1, 1995
400–429	(869–026–00164–2)	26.00	Oct. 1, 1995
430–End	(869–026–00165–1)	39.00	Oct. 1, 1995
43 Parts:			
1–999	(869–026–00166–9)	23.00	Oct. 1, 1995
1000–3999	(869–026–00167–7)	31.00	Oct. 1, 1995
4000–End	(869–026–00168–5)	15.00	Oct. 1, 1995
44	(869–026–00169–3)	24.00	Oct. 1, 1995
45 Parts:			
1–199	(869–022–00170–7)	22.00	Oct. 1, 1995
200–499	(869–026–00171–5)	14.00	Oct. 1, 1995
500–1199	(869–026–00172–3)	23.00	Oct. 1, 1995
1200–End	(869–026–00173–1)	26.00	Oct. 1, 1995
46 Parts:			
1–40	(869–026–00174–0)	21.00	Oct. 1, 1995
41–69	(869–026–00175–8)	17.00	Oct. 1, 1995
70–89	(869–026–00176–6)	8.50	Oct. 1, 1995
90–139	(869–026–00177–4)	15.00	Oct. 1, 1995
140–155	(869–026–00178–2)	12.00	Oct. 1, 1995
156–165	(869–026–00179–1)	17.00	Oct. 1, 1995
166–199	(869–026–00180–4)	17.00	Oct. 1, 1995
200–499	(869–026–00181–2)	19.00	Oct. 1, 1995
500–End	(869–026–00182–1)	13.00	Oct. 1, 1995
47 Parts:			
0–19	(869–026–00183–9)	25.00	Oct. 1, 1995
20–39	(869–026–00184–7)	21.00	Oct. 1, 1995
40–69	(869–026–00185–5)	14.00	Oct. 1, 1995
70–79	(869–026–00186–3)	24.00	Oct. 1, 1995
80–End	(869–026–00187–1)	30.00	Oct. 1, 1995
48 Chapters:			
1 (Parts 1–51)	(869–026–00188–0)	39.00	Oct. 1, 1995
1 (Parts 52–99)	(869–026–00189–8)	24.00	Oct. 1, 1995
2 (Parts 201–251)	(869–026–00190–1)	17.00	Oct. 1, 1995
2 (Parts 252–299)	(869–026–00191–0)	13.00	Oct. 1, 1995
3–6	(869–026–00192–8)	23.00	Oct. 1, 1995
7–14	(869–026–00193–6)	28.00	Oct. 1, 1995
15–28	(869–026–00194–4)	31.00	Oct. 1, 1995
29–End	(869–026–00195–2)	19.00	Oct. 1, 1995
49 Parts:			
1–99	(869–026–00196–1)	25.00	Oct. 1, 1995
100–177	(869–026–00197–9)	34.00	Oct. 1, 1995
178–199	(869–026–00198–7)	22.00	Oct. 1, 1995
200–399	(869–026–00199–5)	30.00	Oct. 1, 1995
400–999	(869–026–00200–2)	40.00	Oct. 1, 1995
1000–1199	(869–026–00201–1)	18.00	Oct. 1, 1995
1200–End	(869–026–00202–9)	15.00	Oct. 1, 1995
50 Parts:			
1–199	(869–026–00203–7)	26.00	Oct. 1, 1995
200–599	(869–026–00204–5)	22.00	Oct. 1, 1995
600–End	(869–026–00205–3)	27.00	Oct. 1, 1995
CFR Index and Findings Aids	(869–028–00051–7)	35.00	Jan. 1, 1996

Title	Stock Number	Price	Revision Date
Complete 1996 CFR set		883.00	1996
Microfiche CFR Edition:			
Subscription (mailed as issued)		264.00	1996
Individual copies		1.00	1996
Complete set (one-time mailing)		264.00	1995
Complete set (one-time mailing)		244.00	1994
Complete set (one-time mailing)		223.00	1993

[1] Because Title 3 is an annual compilation, this volume and all previous volumes should be retained as a permanent reference source.

[2] The July 1, 1985 edition of 32 CFR Parts 1–189 contains a note only for Parts 1–39 inclusive. For the full text of the Defense Acquisition Regulations in Parts 1–39, consult the three CFR volumes issued as of July 1, 1984, containing those parts.

[3] The July 1, 1985 edition of 41 CFR Chapters 1–100 contains a note only for Chapters 1 to 49 inclusive. For the full text of procurement regulations in Chapters 1 to 49, consult the eleven CFR volumes issued as of July 1, 1984 containing those chapters.

[4] No amendments to this volume were promulgated during the period Apr. 1, 1990 to Mar. 31, 1996. The CFR volume issued April 1, 1990, should be retained.

[5] No amendments to this volume were promulgated during the period July 1, 1991 to June 30, 1995. The CFR volume issued July 1, 1991, should be retained.