burden on carriers who are now required to file paper tariffs with the Commission.

29. We have considered the alternative of not requiring the LECs to submit the information noted above. We believe, however, that these proposals would not impose a significant burden on price cap carriers and that the minimal burden resulting from these proposals is outweighed by the Commission's need to fulfill its statutory duties. We seek comment on this tentative conclusion and any other potential impact of these proposals on small business entities.

30. *Federal Rules which Overlap, Duplicate or Conflict with these Rules:* None.

C. Initial Paperwork Reduction Act of 1995 Analysis

This NPRM contains proposed or modified information collections subject to the Paperwork Reduction Act of 1995 (PRA). It has been submitted to the Office of Management and Budget (OMB) for review under the PRA. OMB, the general public, and other Federal agencies are invited to comment on the proposed or modified information collections contained in this proceeding.

D. Comment Filing Procedures

In order to facilitate review of comments and reply comments, by both parties and Commission staff, we require that comments be no longer than 40 pages for comments and 20 pages for replies. Comments and reply comments must include a short and concise summary of the substantive arguments raised in the pleading. Comments and reply comments must also comply with Section 1.49 and all other applicable sections of the Commission's rules. We also direct all interested parties to include the name of the filing party and the date of the filing on each page of their comments and reply comments. Comments and reply comments also must clearly identify the specific portion of this NPRM to which a particular comment or set of comments is responsive. If a portion of a party's comments does not fall under a particular topic listed in the NPRM, such comments must be included in a clearly labelled section at the beginning or end of the filing. Parties may not file more than a total of ten (10) pages of *ex parte* submissions, excluding cover letters. This 10 page limit does not include: (1) Written *ex parte* filings made solely to disclose an oral *ex parte* contact; (2) written material submitted at the time of an oral presentation to Commission staff that provides a brief outline of the presentation; (3) written material filed in response to direct requests from commission staff, or (4) any proposed rule language. *Ex parte* filings in excess of this limit will not be considered as part of the record in this proceeding.

Parties are also asked to submit comments and reply comments on diskette. Such diskette submissions would be in addition to and not a substitute for the formal filing requirements addressed above. Parties submitting diskettes should submit them to Jerry McKoy of the Common Carrier Bureau, 1919 M Street, N.W., Room 518, Washington, D.C. 20554. Such a submissions should be on a 3.5 inch diskette formatted in an IBM compatible form using MS DOS 5.0 and WordPerfect 5.1 software. The diskette should be submitted in ''read only'' mode and should be clearly labelled with the party's name, proceeding, type of pleading (comment or reply comments) and date of submission. The diskette should be accompanied by a cover letter.

In addition to filing comments with the Secretary, a copy of any comments on the information collections contained herein should be submitted to Dorothy Conway, Federal Communications Commission, Room 234, 1919 M Street, N.W., Washington, DC 20554, or via the Internet to dconway@fcc.gov and to Timothy Fain, OMB Desk Officer, 10236 NEOB, 725—17th Street, N.W., Washington, DC 20503 or via the Internet to fain__t@al.eop.gov.

VII. Ordering Clauses

31. Accordingly, it is ordered that, pursuant to Sections 1 and 4 of the Communications Act of 1934, as amended, 47 U.S.C. 151 and 154, a notice of proposed rulemaking is hereby adopted and that comment is sought on the issues contained therein. Interested parties may file comments on or before October, 9, 1996, and reply comments on or before October 24, 1996.

32. It is further ordered that, the Secretary shall send a copy of this NPRM of Proposed Rulemaking, including the regulatory certification, to the Chief Counsel for Advocacy of the Small Business Administration, in accordance with Paragraph 605(b) and Paragraph 603(a) of the Regulatory Flexibility Act, Public Law 96–354, 94 Stat. 114, 5 U.S.C. 601 *et seq* (1981).

List of Subjects in 47 CFR Part 69

Telephone.

Federal Communications Commission.

Shirley S. Suggs,

Chief, Publications Branch.

[FR Doc. 96–24464 Filed 9–23–96; 8:45 am]

BILLING CODE 6712–01–P

DEPARTMENT OF TRANSPORTATION

National Highway Traffic Safety Administration

49 CFR Parts 571 and 572

[Docket No. 96–098, Notice 01]

RIN 2127–AG37

Side Impact Protection Side Impact Dummy

AGENCY: National Highway Traffic Safety Administration (NHTSA), DOT.

ACTION: Notice of proposed rulemaking.

SUMMARY: This document proposes two amendments to the specifications for the side impact test dummy and to the procedure in NHTSA's side impact protection standard for positioning the dummy in a vehicle for compliance testing purposes. The first amendment would add plastic inserts-spacers to the dummy's lumbar spine. This change is intended to prevent a cable within the spine from snapping, which some manufacturers believe can generate large spikes in the data obtained from the dummy. The second amendment would specify that the ribcage damper piston of the dummy is set during the dummy positioning procedure to the fully extended position prior to the side impact dynamic test. These changes are intended to improve the consistency of the data obtained from the dummy in a side impact crash test.

DATES: Comments on this proposed rule must be received by the agency no later than November 25, 1996.

Proposed effective date: 45 days after publication of a final rule in the Federal Register.

ADDRESSES: Comments should refer to the docket number and notice number and be submitted in writing to: Docket Section, National Highway Traffic Safety Administration, Room 5109, 400 Seventh Street, S.W., Washington, D.C., 20590. Telephone: (202) 366–5267. Docket hours are 9:30 a.m. to 4:00 p.m. Monday through Friday.

FOR FURTHER INFORMATION CONTACT: For nonlegal issues: Mr. Stan Backaitis, Office of Vehicle Safety Standards, (telephone 202–366–4912). For legal issues: Ms. Deirdre Fujita, Office of the Chief Counsel (202–366–2992). Both can be reached at the National Highway

Traffic Safety Administration, 400 Seventh St., S.W., Washington, D.C., 20590.

SUPPLEMENTARY INFORMATION:

Background

On October 30, 1990, NHTSA published a rule that established dynamic side impact protection requirements for passenger cars. (See, final rule amending Federal Motor Vehicle Safety Standard No. 214, *Side Impact Protection,* 49 CFR 571.214; 55 FR 45722.) The requirements, which became effective September 1, 1993, improve safety by providing protection against injuries to an occupant's thorax and pelvis in a side impact crash.

The requirements provide this protection by placing a side impact dummy (SID) in a vehicle, subjecting the vehicle to a side impact crash test and limiting the amounts of force measured by accelerometer sensors mounted in the thorax and pelvis of the SID. The SID represents an adult male 50th percentile size occupant. At the time of the amendment to Standard 214, specifications for the SID were added to NHTSA's test dummy regulation (see, 49 CFR part 572, subpart F).

Four accelerometers are used to measure the crash test forces. Three accelerometers are mounted in the dummy's thorax and provide acceleration values used in determining the ''Thoracic Trauma Index (TTI(d)).'' TTI(d) is an injury criterion that measures the risk of thoracic injury of a passenger car occupant in a side impact. The fourth accelerometer, mounted in the pelvic cavity, measures the potential risk for pelvic injury. To meet Standard 214's side impact protection requirements, the TTI(d) and pelvic measurements must be below specified maximum values.

Lumbar Spine Inserts

The lumbar spine of the SID is a molded hollow cylindrical rubber element, with bonded circular metal plates that have a hole in the center at each end. A metal cable passes through the center of the lumbar spine cylinder. The top end of the cable is threaded, and the bottom end is shaped like a ball. The threaded end of the cable is fastened with a nut, which can be tightened to provide the desired compression in the lumbar.

A number of motor vehicle manufacturers have informed NHTSA that they have observed spikes in data obtained from side impact tests that increase the variability and the magnitude of the TTI(d). The American Automobile Manufacturers Association (AAMA), representing Ford, Chrysler Corporation and General Motors Corporation, raised the issue of these spikes in a June 29, 1994 letter to the agency. AAMA said that metal-to-metal contact in the SID lumbar spine—

> is inducing data spikes that are of long enough time duration to become part of the data when it is filtered according to the requirements of Standard No. 214. Inclusion of these data spikes in the data increases variability and unwarrranted higher calculations of TTI(d). The spikes could cause manufacturers to redesign their vehicles for no safety reason other than an artifact of the SID. This redesign would increase business costs with no safety benefit to the customer.

AAMA stated that it determined that the noise spikes were caused by (1) the nut and threaded area on top of the metal spine cable striking the inner edge of the hole of the metal top-plate of the lumbar spine when the spine flexes; (2) the ball at the end of the lumbar spine cable popping in and out of the seat of the metal bottom plate when the spine is compressed; and (3) the spine cable nut hitting the thorax to lumbar spine adaptor assembly.

Toyota Motor Corporate Services of North America (Toyota) also informed NHTSA that it was concerned about ''unwarranted spine * * * noise.'' (Letter to NHTSA from Mr. Saburo Inui, October 21, 1994.) Toyota confirmed that the ''noise'' that AAMA found in the data traces also occurred during Toyota's compliance and experimental development tests. The manufacturer requested NHTSA to modify the SID specifications by covering the spine cable with a shrinking plastic tube and placing a rubber washer between the top-plate and the fastening nut.

Subsequently, AAMA recommended specific corrections to the SID to eliminate the spine ringing. In a December 13, 1994 letter (see item 88–07–N03–006 in NHTSA's docket), AAMA recommended adding Delrin spacers in the top and bottom plates of the lumbar spine:

> These spacers would be an efficient and effective way to correct the spine ringing problem in the SID. They would be inserted into the top and bottom plate of the lumbar spine assembly. No modifications to the lumbar spine would be required for their use. This would be cost effective for dummy users, since their inventory of SID lumbar spines, would not have to be returned to dummy manufacturers for rework. * * *

AAMA stated that Ford conducted component testing to determine the effect of using the Delrin inserts on SID performance. Ford found that when the Delrin spacers were used, the data spikes were eliminated. AAMA also said that in subsequent crash tests conducted by member companies, no indications of spine ringing were found when the spacers were used. AAMA provided data to substantiate that relevant SID responses would not be altered by the use of the spacers, i.e., they do not alter the SID responses except for the elimination of spine noise. AAMA also indicated that the spacers are durable and are readily available from Vector Research, a dummy manufacturer.

On March 29, 1995, Mercedes Benz submitted a letter to NHTSA supporting the use of the Delrin spacers, as suggested by AAMA. The manufacturer stated: ''After much testing, we believe the AAMA has provided sufficient evidence that artificial 'noise' is eliminated by using these spacers and that the relevant SID responses are not affected.''

After receiving these letters and comments, NHTSA reviewed data it obtained from tests with the SID for evidence of spine noise (spikes). None of the available agency experimental or vehicle compliance data indicated definitive evidence of data contamination and/or distortion clearly attributable to spine cable snap. Further, it appeared from data submitted by Ford that the ''noise'' that the manufacturer found, while visible primarily in several portions of the raw data traces, would nonetheless be reduced to insignificant values by the specified FIR filter. Also, the noise consisted of extremely short duration spikes occurring earlier or considerably later than the peak acceleration magnitudes in real world crash tests. Usually such short duration spikes do not have much energy content and accordingly, have little or no effect on the true acceleration measurement, particularly since they do not occur at points in time at which the TTIs are at maximum.

While the agency's data did not show that spine noise was problematic, NHTSA conducted further investigations to better understand the manufacturers' concerns. In January 1995, NHTSA determined through component tests of the SID torso that manufacturers were correct that slippage of the SID's spine cable anchorage can produce spikes in the data. (A July 1996 memorandum describing the testing is in Docket 88–07, Notice 3.) In the component tests, the SID upper torso part was rocked while the bottom half was held rigid. The rocking tests caused the cable ends to slip, resulting in the generation of low level ''clicking'' and some minor noise spikes in the ribcage response data. It should be noted, however, that

none of the rocking motions producing spine cable snap generated spikes that had any resemblance in shape or in magnitude to those described by AAMA or Toyota.

NHTSA also found in the rocking tests that the Delrin spacers, which AAMA suggested the agency should use in the SID spine, stopped the cable from slipping and eliminated the clicking noise. In a series of sled tests, NHTSA also determined that the spine inserts produce somewhat less spikelike acceleration responses in the raw unfiltered data compared to tests without the spacers. In a series of impact tests, the agency established that the spacers had no appreciable effects on stiffness of the spine, but resulted in lower magnitudes of spikes in the ''z'' (vertical) acceleration channel. NHTSA also found that the inserts have little, if any, effect on the TTI value measurements. The above tests are described in a July 1996 memorandum in Docket 88–07, Notice 3.

While the agency's data do not support the claims of some manufacturers that spine noise affects the TTI(d) measurements sufficiently to compel the possible redesign of their vehicles, NHTSA has confirmed that the SID spine cable does move in a ''snap-like'' motion that can produce low level spikes that are clearly visible in unfiltered raw data. This ''noise,'' while thus far negligible upon FIR filtering, is nonetheless undesirable in itself as part of the crash event. Any looseness or snapping of components within the SID can produce rattling or unwarranted snapping effects that could potentially distort the data from the dummy and possibly complicate compliance testing. NHTSA therefore tentatively concludes that ''noise'' from movement of the spine cable should be minimized to the extent reasonably possible and that spacers inserted into appropriate places in the spine are a reasonable means of effectively preventing such movement. Accordingly, the agency proposes to amend the specifications for the SID to incorporate use of lumbar spine spacers in Standard 214 compliance tests. Estimated cost of the two spacers is $154. Given that on average, a SID can be used in at least 30 tests, the estimated cost of the spacers is at most $5 per impact test.

Readers are invited to provide test data and comments relating to their experience in testing dummies equipped with lumbar spine spacers.

Proposed Drawing Revisions

To incorporate the use of lumbar spine spacers, this proposal would replace dummy assembly drawing SA–SID–M050, revision A (dated May 18, 1994) with revision B. Revision B would include reference to:

1. Drawing Lumbar Spacers-Lower SID–SM–001, which indicates the spine lower spacer;

2. Drawing Lumbar Spacers-Upper SID–SM–002, which indicates the spine upper spacer; and

3. Drawing 78051–243 to indicate a washer.

The drawings for the SID spine lower spacer and upper spacer are depicted in this NPRM in figures 1 and 2, respectively.

BILLING CODE 4910–59–P

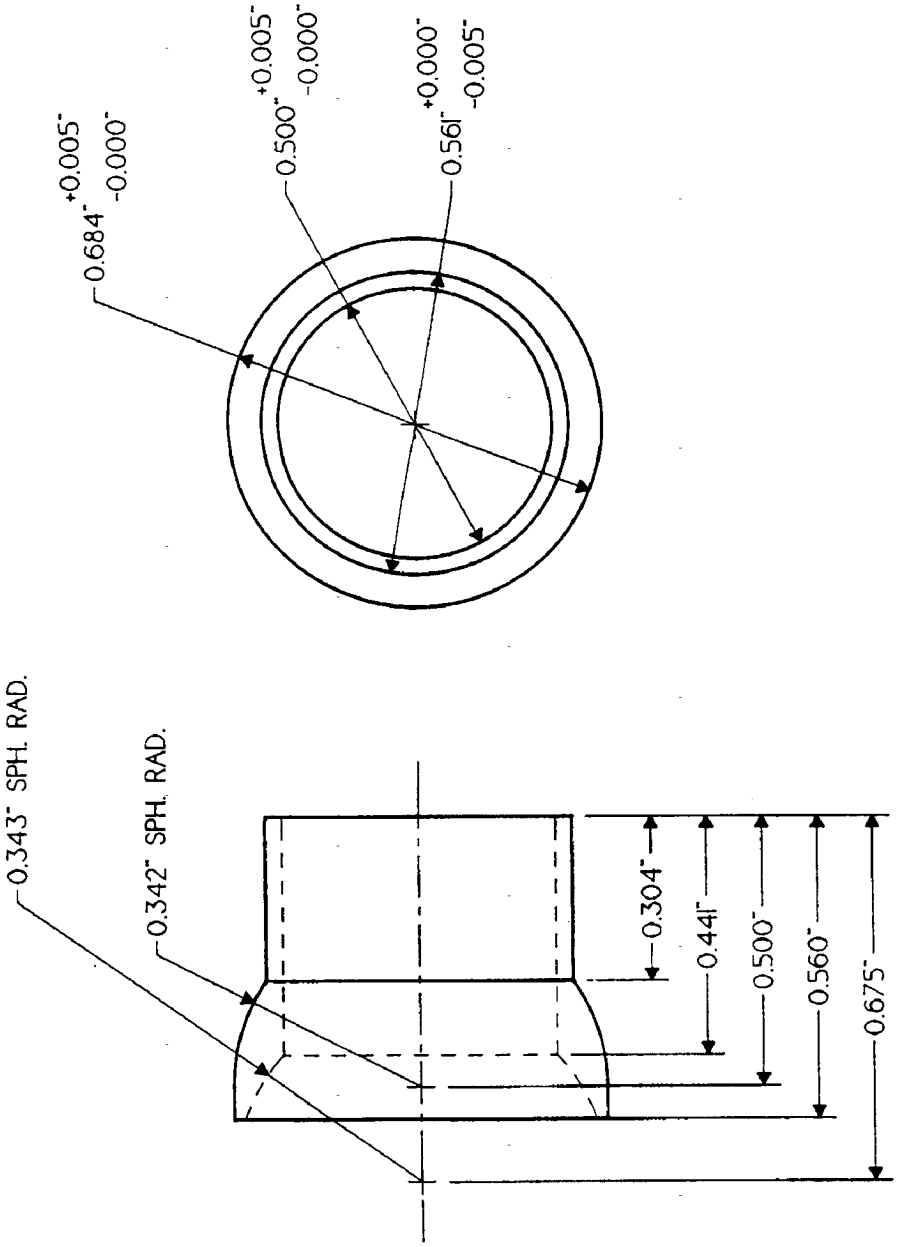

Figure 1 - SID SPINE LOWER SPACER

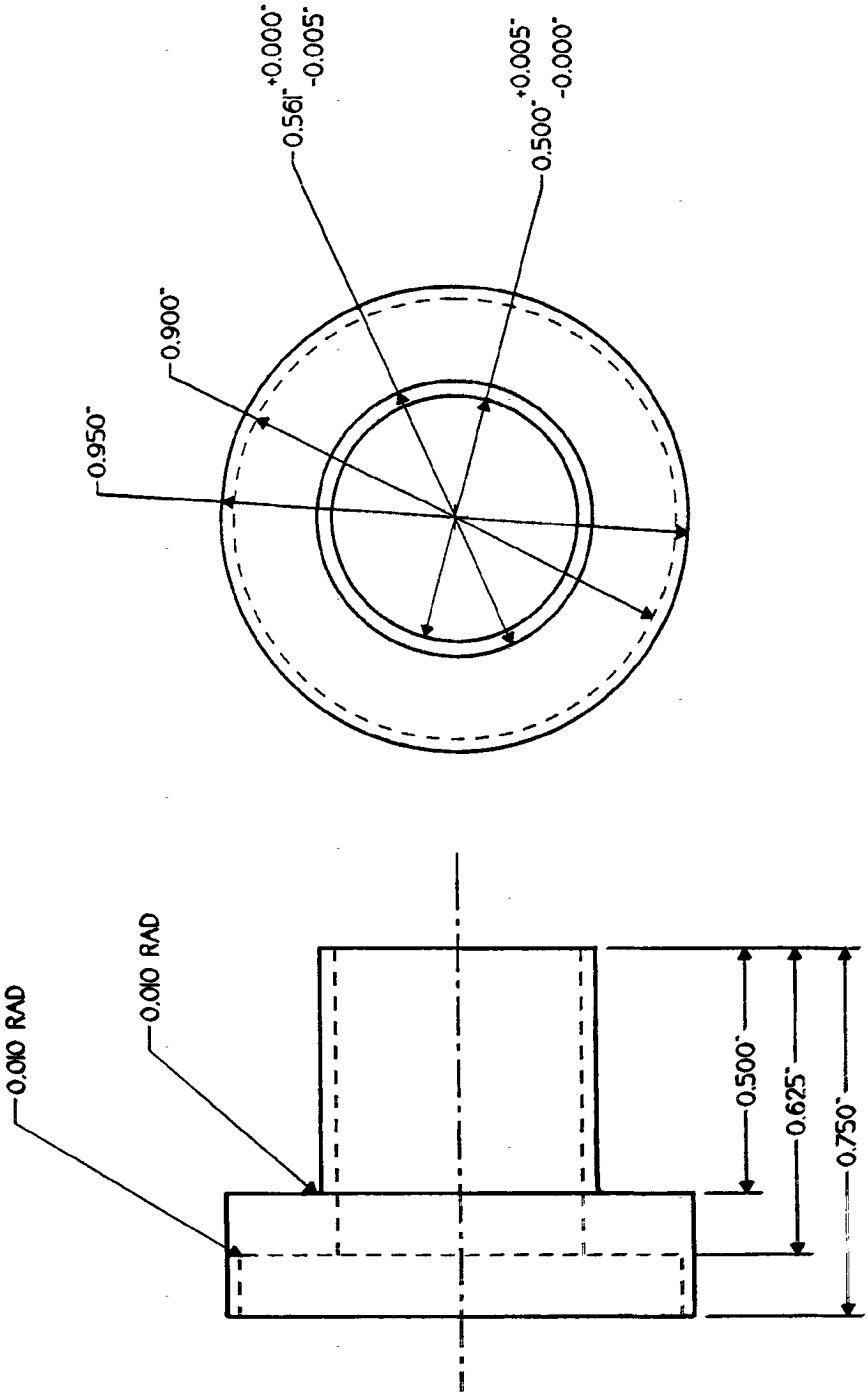

Figure 2 - SID SPINE UPPER SPACER

BILLING CODE 4910–59–C

The SID users manual, dated May 1994, would be revised to reflect the assembly of the above parts.

Damper Piston Movement

During the sled tests that the agency conducted to evaluate the effect of spacer inserts in the SID lumbar spine, NHTSA observed that the position of the damper piston in the SID ribcage prior to the test had an appreciable effect on the thorax accelerations recorded by the SID. In some tests, some of the thorax responses contained initial short duration damper piston movement in the direction opposite of impact, followed by a longer duration movement in the direction of impact. Upon closer inspection of the damper piston position in dummies set up for impact, NHTSA noted that the damper position was not fully extended in some of the dummies. The agency subsequently found, through tests with the damper piston position purposely fully extended or partly compressed, that the damper piston's initial position can be an important factor in determining whether the dummy's key thorax sensors will record higher or lower accelerations.

In a side impact in which contact occurs first at the dummy's hip level, a dummy's ribcage initially moves (relative to the pelvis bone) toward the impact. When the damper piston is partly compressed prior to impact, the damper piston will fully extend itself during impact until it is arrested by the piston bottoming out against the damper body. The test data indicate that this internal ''collision'' of the damper piston against the damper body is the primary cause of inconsistency in data measurements and the determination of acceleration levels. This collision does not occur when the piston is fully extended within the damper body prior to the test.

To better ensure that the impact response measurements are more repeatable and reproducible, NHTSA proposes to specify in Standard 214's SID positioning procedures that the damper piston is in the fully extended position before the test. Prior to sled tests that showed the apparent damper piston position problem, the agency believed that a piston return spring in the SID would develop sufficient force to set the damper piston in the fully extended position. It appears, however, that the spring is not stiff enough to set the piston in every dummy in the fully extended position and that steps to ensure extension of the piston are necessary.

NHTSA found that the piston can be fully extended by rocking a seated dummy in the lateral direction immediately prior to a test or by reaching through a partly unzipped SID torso jacket and forcing the piston into a full extension. NHTSA believes these measures will ensure that the damper piston is in the fully extended position at the time of the side impact test. NHTSA tentatively concludes that a visual inspection appears to be adequate to ensure that the piston is fully extended and that a position sensor may not be needed. However, it is noted that for users who want assurance, through measurements, that the piston position is fully extended, the SID specifications package already allows use of a ribcage position sensor as an option. The cost of the sensor, with mounting brackets, is approximately $1,025. Comments are requested on whether the SID specifications package should require the use of a sensor.

Rulemaking Analyses and Notices

Executive Order 12866 and DOT Regulatory Policies and Procedures

NHTSA has considered the impact of this rulemaking action under E.O. 12866 and the Department of Transportation's regulatory policies and procedures. This rulemaking document was not reviewed under E.O. 12866, ''Regulatory Planning and Review.'' This action has been determined to be ''non-significant'' under the Department of Transportation's regulatory policies and procedures. The proposed amendments would not require any vehicle design changes but would instead only require minor modifications in the test dummy used to evaluate a vehicle's compliance with Standard No. 214. According to Vector Research, a dummy manufacturer, the two Delrin spacers (lumbar spine inserts) cost $154. Thus far, these have been precision machined parts aimed to satisfy individual low volume orders. The cost is expected to decrease considerably once the other dummy manufacturer (FTSS) begins manufacturing the spacers. If use of spacers increases, dummy manufacturers may seek to produce them through precision molding, which could further reduce the cost of the spacer. The agency has determined that the impacts of the proposed amendments would be so minimal that a full regulatory evaluation is not required.

Regulatory Flexibility Act

NHTSA has also considered the impacts of this notice under the Regulatory Flexibility Act. I hereby certify that this proposed rule would not have a significant economic impact on a substantial number of small entities. Modifications to dummy designs affect motor vehicle manufacturers, few of which are small entities. As described above, there would be no significant economic impact on any vehicle manufacturers, whether large or small. Further, since no price increases would be associated with the proposed rule, small organizations and small governmental units would not be affected in their capacity as purchasers of new vehicles.

National Environmental Policy Act

NHTSA has also analyzed this proposed rule under the National Environmental Policy Act and determined that it would not have a significant impact on the human environment.

Executive Order 12612 (Federalism)

NHTSA has analyzed this proposal in accordance with the principles and criteria contained in E.O. 12612, and has determined that this proposed rule would not have significant federalism implications to warrant the preparation of a Federalism Assessment.

Civil Justice Reform

This proposed rule would not have any retroactive effect. Under 49 U.S.C. 30103, whenever a Federal motor vehicle safety standard is in effect, a State may not adopt or maintain a safety standard applicable to the same aspect of performance which is not identical to the Federal standard, except to the extent that the state requirement imposes a higher level of performance and applies only to vehicles procured for the State's use. 49 U.S.C. 30161 sets forth a procedure for judicial review of final rules establishing, amending or revoking Federal motor vehicle safety standards. That section does not require submission of a petition for reconsideration or other administrative proceedings before parties may file suit in court.

Submission of Comments

Interested persons are invited to submit comments on the proposal. It is requested but not required that 10 copies be submitted.

All comments must not exceed 15 pages in length. (49 CFR 553.21). Necessary attachments may be appended to these submissions without regard to the 15-page limit. This limitation is intended to encourage commenters to detail their primary arguments in a concise fashion.

If a commenter wishes to submit certain information under a claim of confidentiality, three copies of the

complete submission, including purportedly confidential business information, should be submitted to the Chief Counsel, NHTSA, at the street address given above, and seven copies from which the purportedly confidential information has been deleted should be submitted to the Docket Section. A request for confidentiality should be accompanied by a cover letter setting forth the information specified in the agency's confidential business information regulation. 49 CFR Part 512.

All comments received before the close of business on the comment closing date indicated above for the proposal will be considered, and will be available for examination in the docket at the above address both before and after that date. To the extent possible, comments filed after the closing date will also be considered. Comments received too late for consideration in regard to the final rule will be considered as suggestions for further rulemaking action. Comments on the proposal will be available for inspection in the docket. The NHTSA will continue to file relevant information as it becomes available in the docket after the closing date, and it is recommended that interested persons continue to examine the docket for new material.

Those persons desiring to be notified upon receipt of their comments in the rules docket should enclose a self-addressed, stamped postcard in the envelope with their comments. Upon receiving the comments, the docket supervisor will return the postcard by mail.

List of Subjects

49 CFR Part 571

Imports, Motor vehicle safety, Motor vehicles.

49 CFR Part 572

Motor vehicle safety, Incorporation by reference.

In consideration of the foregoing, NHTSA amends 49 CFR Parts 571 and 572 as set forth below.

PART 571—FEDERAL MOTOR VEHICLE SAFETY STANDARDS

1. The authority citation for Part 571 would continue to read as follows:

Authority: 49 U.S.C. 322, 30111, 30115, 30117 and 30166; delegation of authority at 49 CFR 1.50.

§ 571.214 [Amended]

2. Section 571.214 would be amended by adding an introductory text for S7.1, *Torso*, to read as follows:

S7.1 *Torso*. For a test dummy in any seating position, the piston of the torso damper (SID 083) is fully extended.

* * * * *

PART 572—ANTHROPOMORPHIC TEST DUMMIES

3. The authority citation for Part 572 would continue to read as follows:

Authority: 49 U.S.C. 322, 30111, 30115, 30117 and 30166; delegation of authority at 49 CFR 1.50.

4. In section 572.41, the introductory text of (a), and paragraphs (a)(4) and (c) would be revised to read as follows:

§ 572.41 General description.

(a) The dummy consists of component parts and component assemblies (SA–SID–M001A, revision B, dated [*to be determined*] which are described in approximately 250 drawings and specifications that are set forth in § 572.5(a) with the following changes and additions which are described in approximately 85 drawings and specifications (incorporated by reference; see § 572.40):

* * * * *

(4) The lumbar spine consists of the assembly specified in subpart B (§ 572.9(a)) and conforms to drawing SA 150 M050 and drawings subtended by SA–SID–M050 revision B, dated [*to be determined*], including the addition of Lumbar Spacers-Lower SID–SM–001 and Lumbar Spacers-Upper SID–SM–002, and Washer 78051–243.

* * * * *

(c) Disassembly, inspection, and assembly procedures; external dimensions and weight; and a dummy drawing list are set forth in the Side Impact Dummy (SID) User's Manual, dated [*to be determined*] (incorporated by reference; see § 572.40).

* * * * *

5. In section 572.43, paragraph (a) would be revised to read as follows:

§ 572.43 Lumbar spine and pelvis.

(a) When the pelvis of a fully assembled dummy (SA–SID–M001A revision B, dated [*to be determined*] (incorporated by reference; see § 572.40) is impacted laterally by a test probe conforming to § 572.44(a) at 14 fps in accordance with paragraph (b) of this section, the peak acceleration at the location of the accelerometer mounted in the pelvis cavity in accordance with § 572.44(c) shall be not less than 40g and not more than 60g. The acceleration-time curve for the test shall be unimodal and shall lie at or above the +20g level for an interval not less than 3 milliseconds and not more than 7 milliseconds.

* * * * *

Issued on September 16, 1996.

L. Robert Shelton,

Acting Associate Administrator for Safety Performance Standards.

[FR Doc. 96–24206 Filed 9–23–96; 8:45 am]

BILLING CODE 4910–59–P