10–4–96
Vol. 61 No. 194
Pages 51767–52232

federal register

Friday
October 4, 1996

Briefings on How To Use the Federal Register
For information on briefings in Washington, DC, see announcement on the inside cover of this issue.

FEDERAL REGISTER Published daily, Monday through Friday, (not published on Saturdays, Sundays, or on official holidays), by the Office of the Federal Register, National Archives and Records Administration, Washington, DC 20408, under the Federal Register Act (49 Stat. 500, as amended; 44 U.S.C. Ch. 15) and the regulations of the Administrative Committee of the Federal Register (1 CFR Ch. I). Distribution is made only by the Superintendent of Documents, U.S. Government Printing Office, Washington, DC 20402.

The Federal Register provides a uniform system for making available to the public regulations and legal notices issued by Federal agencies. These include Presidential proclamations and Executive Orders and Federal agency documents having general applicability and legal effect, documents required to be published by act of Congress and other Federal agency documents of public interest. Documents are on file for public inspection in the Office of the Federal Register the day before they are published, unless earlier filing is requested by the issuing agency.

The seal of the National Archives and Records Administration authenticates this issue of the Federal Register as the official serial publication established under the Federal Register Act. 44 U.S.C. 1507 provides that the contents of the Federal Register shall be judicially noticed.

The Federal Register is published in paper, 24x microfiche and as an online database through *GPO Access*, a service of the U.S. Government Printing Office. The online edition of the Federal Register on *GPO Access* is issued under the authority of the Administrative Committee of the Federal Register as the official legal equivalent of the paper and microfiche editions. The online database is updated by 6 a.m. each day the Federal Register is published. The database includes both text and graphics from Volume 59, Number 1 (January 2, 1994) forward. Free public access is available on a Wide Area Information Server (WAIS) through the Internet and via asynchronous dial-in. Internet users can access the database by using the World Wide Web; the Superintendent of Documents home page address is http://www.access.gpo.gov/su__docs/, by using local WAIS client software, or by telnet to swais.access.gpo.gov, then login as guest, (no password required). Dial-in users should use communications software and modem to call (202) 512–1661; type swais, then login as guest (no password required). For general information about *GPO Access*, contact the *GPO Access* User Support Team by sending Internet e-mail to gpoaccess@gpo.gov; by faxing to (202) 512–1262; or by calling (202) 512–1530 between 7 a.m. and 5 p.m. Eastern time, Monday–Friday, except for Federal holidays.

The annual subscription price for the Federal Register paper edition is $494, or $544 for a combined Federal Register, Federal Register Index and List of CFR Sections Affected (LSA) subscription; the microfiche edition of the Federal Register including the Federal Register Index and LSA is $433. Six month subscriptions are available for one-half the annual rate. The charge for individual copies in paper form is $8.00 for each issue, or $8.00 for each group of pages as actually bound; or $1.50 for each issue in microfiche form. All prices include regular domestic postage and handling. International customers please add 25% for foreign handling. Remit check or money order, made payable to the Superintendent of Documents, or charge to your GPO Deposit Account, VISA or MasterCard. Mail to: New Orders, Superintendent of Documents, P.O. Box 371954, Pittsburgh, PA 15250–7954.

There are no restrictions on the republication of material appearing in the Federal Register.

How To Cite This Publication: Use the volume number and the page number. Example: 61 FR 12345.

SUBSCRIPTIONS AND COPIES

PUBLIC	
Subscriptions:	
Paper or fiche	202–512–1800
Assistance with public subscriptions	512–1806
General online information	202–512–1530
Single copies/back copies:	
Paper or fiche	512–1800
Assistance with public single copies	512–1803
FEDERAL AGENCIES	
Subscriptions:	
Paper or fiche	523–5243
Assistance with Federal agency subscriptions	523–5243

For other telephone numbers, see the Reader Aids section at the end of this issue.

FEDERAL REGISTER WORKSHOP

THE FEDERAL REGISTER: WHAT IT IS AND HOW TO USE IT

FOR: Any person who uses the Federal Register and Code of Federal Regulations.

WHO: Sponsored by the Office of the Federal Register.

WHAT: Free public briefings (approximately 3 hours) to present:

1. The regulatory process, with a focus on the Federal Register system and the public's role in the development of regulations.
2. The relationship between the Federal Register and Code of Federal Regulations.
3. The important elements of typical Federal Register documents.
4. An introduction to the finding aids of the FR/CFR system.

WHY: To provide the public with access to information necessary to research Federal agency regulations which directly affect them. There will be no discussion of specific agency regulations.

WASHINGTON, DC

WHEN: October 22, 1996 at 9:00 a.m.

WHERE: Office of the Federal Register
Conference Room
800 North Capitol Street, NW.
Washington, DC
(3 blocks north of Union Station Metro)

RESERVATIONS: 202–523–4538

Printed on recycled paper containing 100% post consumer waste

Contents

Federal Register
Vol. 61, No. 194
Friday, October 4, 1996

Agricultural Marketing Service
PROPOSED RULES
Peanuts, domestically and foreign produced, 51811–51835

Agriculture Department
See Agricultural Marketing Service
See Animal and Plant Health Inspection Service
See Commodity Credit Corporation

Air Force Department
NOTICES
Privacy Act:
Systems of records, 51923–51925

Animal and Plant Health Inspection Service
RULES
Exportation and importation of animals and animal products:
Rinderpest and foot-and-mouth disease; disease status change—
Czech Republic and Italy, 51769–51771
Plant-related quarantine, domestic:
Karnal bunt disease—
Seed planting, regulated articles movement and risk levels; criteria, 52190–52213
Viruses, serums, toxins, etc.:
Antibody products, 51771–51777
PROPOSED RULES
Federal Seed Act:
Imported seed and screenings, 51791–51810

Blind or Severely Disabled, Committee for Purchase From People Who Are
See Committee for Purchase From People Who Are Blind or Severely Disabled

Coast Guard
RULES
Federal regulatory reform:
Electrical engineering requirements for merchant vessels, 51789

Commerce Department
See International Trade Administration
See National Institute of Standards and Technology
See National Oceanic and Atmospheric Administration
See Patent and Trademark Office

Committee for Purchase From People Who Are Blind or Severely Disabled
NOTICES
Procurement list; additions and deletions, 51881–51882

Commodity Credit Corporation
NOTICES
Grants and cooperative agreements; availability, etc.:
Market access program, 51880–51881

Comptroller of the Currency
RULES
Credit life insurance sales; Federal regulatory reform, 51777–51782

Customs Service
PROPOSED RULES
Articles conditionally free, subject to reduced rate, etc.:
Containers designated as instruments of international traffic in point-to-point local traffic, 51849–51851

Defense Department
See Air Force Department
See Defense Intelligence Agency
See Defense Logistics Agency
PROPOSED RULES
Federal Acquisition Regulation (FAR):
Contractors and offerors; certification requirements removed; public meeting, 52232
NOTICES
Arms sales notification; transmittal letter, etc., 51915–51922

Defense Intelligence Agency
NOTICES
Meetings:
Scientific Advisory Board, 51925

Defense Logistics Agency
NOTICES
Privacy Act:
Systems of records, 51925–51926

Education Department
RULES
Postsecondary education:
CFR parts removed, 51783–51784
NOTICES
Meetings:
Institutional Quality and Integrity National Advisory Committee, 51926–51927
National Library of Education Advisory Task Force, 51927
Sexual harassment guidance; student harassment by school employees; document availability, 52172–52183

Employment and Training Administration
NOTICES
Adjustment assistance:
Blue Mountain Forest Products, 52062
Brandie Rose, Inc., et al., 52062–52063
Klear-Knit of Statesville, Inc., et al., 52063
Prentiss Manufacturing Co., 52063–52064
Tifton Apparel Manufacturing Co., 52064

Employment Standards Administration
NOTICES
Minimum wages for Federal and federally-assisted construction; general wage determination decisions, 52064–52067

Energy Department
See Federal Energy Regulatory Commission
NOTICES
Grants and cooperative agreements; availability, etc.:
Advanced materials for low emissions, high efficiency diesel engine components; research and development, 51927–51929

Meetings:
Environmental Management Advisory Board, 51929

Environmental Protection Agency
RULES
Air pollution control; new motor vehicles and engines:
Gasoline spark-ignition and diesel compression-ignition marine engines; emission standards, 52088–52169
Air quality implementation plans; approval and promulgation; various States:
Colorado, 51784–51787
PROPOSED RULES
Air quality implementation plans; approval and promulgation; various States:
Colorado, 51877
Hazardous waste:
State underground storage tank program approvals—
Alabama, 51875–51877
NOTICES
Environmental statements; availability, etc.:
Agency statements—
Comment availability, 51937–51938
Weekly receipts, 51938–51939
Coastal nonpoint pollution control program; Massachusetts, Maryland, U.S. Virgin Islands, and Northern Mariana Islands, 51914

Executive Office of the President
See Presidential Documents
See Trade Representative, Office of United States

Federal Aviation Administration
RULES
Air traffic operating and flight rules:
Iran; prohibition against certain flights within territory and airspace (SFAR No. 76); removal, 51782
PROPOSED RULES
Airworthiness directives:
McDonnell Douglas, 51845–51847
Pratt & Whitney, 51847–51849
Rulemaking petitions; summary and disposition, 51844–51845
NOTICES
Airport noise compatibility program:
Kansas City International Airport, MO, 52080–52081
Exemption petitions; summary and disposition, 52081–52085

Federal Communications Commission
RULES
Radio stations; table of assignments:
Arkansas, 51789
PROPOSED RULES
Radio services, special:
Private land mobile services—
200–222 MHz band; finder's preference program, 51877–51878
NOTICES
Agency information collection activities:
Proposed collection; comment request, 51939–51940
Submission for OMB review; comment request, 51940–51941
Rulemaking proceedings; petitions filed, granted, denied, etc., 51941–51942
Applications, hearings, determinations, etc.:
Multimedia Cablevision, Inc., 51941

Federal Deposit Insurance Corporation
NOTICES
Meetings; Sunshine Act, 51942

Federal Emergency Management Agency
NOTICES
Flood insurance program:
Flood map changes, 51942–52031

Federal Energy Regulatory Commission
NOTICES
Electric rate and corporate regulation filings:
Colorado Public Service Co. et al., 51931–51932
MidAmerican Energy Co. et al., 51932–51935
Virginia Electric & Power Co. et al., 51935–51936
Environmental statements; availability, etc.:
Central Vermont Public Service Corp., 51936
Hydroelectric applications, 51936–51937
Applications, hearings, determinations, etc.:
Questar Pipeline Co., 51929–51930
Strategic Energy Management, Inc., 51930
Thicksten Grimm Burgum, Inc., 51930–51931

Federal Highway Administration
NOTICES
Environmental statements; notice of intent:
Johnson County, KS, et al., 52085

Federal Housing Finance Board
NOTICES
Meetings; Sunshine Act, 52032

Federal Maritime Commission
NOTICES
Agreements filed, etc., 52032

Federal Reserve System
NOTICES
Banks and bank holding companies:
Formations, acquisitions, and mergers, 52032
Permissible nonbanking activities, 52032–52033
Meetings; Sunshine Act, 52033

Financial Management Service
See Fiscal Service

Fiscal Service
PROPOSED RULES
Marketable book-entry Treasury bills, notes, and bonds; sale and issue
Correction, 51851–51854

Fish and Wildlife Service
PROPOSED RULES
Endangered and threatened species:
Guajon, 51878–51879
NOTICES
Endangered and threatened species:
Emergency exemptions—
Felis concolor coryl (specific Florida panther), 52053
Environmental statements; availability, etc.:
Lahontan Valley Wetlands, NV, 52053–52054

Food and Drug Administration
NOTICES
Meetings:
Advisory committees, panels, etc., 52034

General Services Administration
PROPOSED RULES
Federal Acquisition Regulation (FAR):
Contractors and offerors; certification requirements removed; public meeting, 52232

Health and Human Services Department
See Food and Drug Administration
See Health Resources and Services Administration
See National Institutes of Health
See Public Health Service
NOTICES
Organization, functions, and authority delegations:
Program Support Center, 52033–52034

Health Resources and Services Administration
NOTICES
Grants and cooperative agreements; availability, etc.:
Primary care training programs, 52034–52040
Meetings; advisory committees:
October, 52040
National vaccine injury compensation program:
Petitions received, 52040–52046

Housing and Urban Development Department
RULES
Civil rights:
Nondiscrimination and equal opportunity matters; hearing procedures consolidation, 52216–52229
Community facilities:
Youthbuild program; administrative costs, 52186–52187
Real Estate Settlement Procedures Act:
Employer-employee exemption, withdrawn; computer loan origination services, and controlled business disclosure format
Effective date delay, 51782–51783
NOTICES
Grants and cooperative agreements; availability, etc.:
Facilities to assist homeless—
Excess and surplus property, 52049–52052

Immigration and Naturalization Service
NOTICES
Environmental statements; availability, etc.:
San Joaquin County, CA; Federal Service Processing Center, 52060

Interior Department
See Fish and Wildlife Service
See Land Management Bureau
See National Park Service
NOTICES
Meetings:
Alaska Land Managers' Forum, 52052–52053

International Boundary and Water Commission, United States and Mexico
NOTICES
Meetings, 52068

International Trade Administration
NOTICES
Antidumping:
Cold-rolled and corrosion-resistant carbon steel flat products from—
Korea, 51882–51888
Cold-rolled carbon steel flat products from—
Netherlands, 51888–51891
Corrosion-resistant carbon steel flat products and cut-to-length carbon steel plate from—
Canada, 51891–51897
Cut-to-length carbon steel plate from—
Brazil, 51904–51907
Finland, 51901–51904
Germany, 51907–51910
Sweden, 51898–51901
Fresh and chilled Atlantic salmon from—
Norway, 51910–51912
Fresh kiwifruit from—
New Zealand, 51912–51913

Justice Department
See Immigration and Naturalization Service

Labor Department
See Employment and Training Administration
See Employment Standards Administration
NOTICES
Agency information collection activities:
Submission for OMB review; comment request, 52060–52062

Land Management Bureau
NOTICES
Coal leases, exploration licenses, etc.:
North Dakota, 52054–52055
Environmental statements; availability, etc.:
Price Coalbed Methane Project, UT, 52055–52056
Realty actions; sales, leases, etc.:
California, 52056
Idaho, 52056–52057
Nevada, 52057
Withdrawal and reservation of lands:
Colorado, 52057–52058

Mexico and United States, International Boundary and Water Commission
See International Boundary and Water Commission, United States and Mexico

National Aeronautics and Space Administration
PROPOSED RULES
Federal Acquisition Regulation (FAR):
Contractors and offerors; certification requirements removed; public meeting, 52232

National Institute of Standards and Technology
NOTICES
Committees; establishment, renewal, termination, etc.:
Manufacturing Extension Partnership National Advisory Board, 51913

National Institutes of Health
NOTICES
Meetings:
National Institute of General Medical Sciences, 52046–52047
National Institute of Neurological Disorders and Stroke, 52047
National Institute on Aging, 52046
National Institute on Alcohol Abuse and Alcoholism, 52046, 52047
National Institute on Drug Abuse, 52046
Research Grants Division special emphasis panels, 52047–52049
Warren Grant Magnuson Clinical Center Board of Governors, 52049

National Oceanic and Atmospheric Administration
RULES
Fishery conservation and management:
Alaska; fisheries of Exclusive Economic Zone
Pacific Ocean perch in Eastern Gulf of Alaska, 51789–51790
NOTICES
Environmental statements; availability, etc.:
Coastal nonpoint pollution control program; Massachusetts, Maryland, U.S. Virgin Islands, and Northern Mariana Islands, 51914
National Weather Service; modernization and restructuring:
Weather Service and Forecast Offices; consolidations, 51914–51915

National Park Service
NOTICES
Native American human remains and associated funerary objects:
Alaska State Office, BLM, Anchorage, AK—
Inventory from Shaktoolik, AK, 52058
Fort Union Trading Post National Historic Site, ND; inventory, 52058–52059
Fowler Museum of Cultural History, University of California-Los Angeles; inventory from Hawaii, 52059
University Museum, University of Arkansas, AR; inventory from Maui, HI, 52059–52060

Nuclear Regulatory Commission
PROPOSED RULES
Deliberate misconduct by unlicensed persons, 51835–51844
NOTICES
Agency information collection activities:
Submission for OMB review; comment request, 52068
Generic letters:
Equipment operability and containment integrity during design-basis accident conditions, 52069

Office of United States Trade Representative
See Trade Representative, Office of United States

Patent and Trademark Office
PROPOSED RULES
Patent cases:
Nucleotide and/or amino acid sequence listings; changes, 51855–51875

Postal Service
NOTICES
Privacy Act:
Systems of records, 52069–52071

Presidential Documents
PROCLAMATIONS
Special observances:
Student Voter Education Day, National (Proc. 6924), 51767

Public Health Service
See Food and Drug Administration
See Health Resources and Services Administration
See National Institutes of Health
RULES
Grants:
Nurse practitioner and nurse midwifery programs, 51787–51788

Securities and Exchange Commission
NOTICES
Self-regulatory organizations; proposed rule changes:
National Association of Securities Dealers, Inc., 52072–52073
National Securities Clearing Corp., 52073–52074
Applications, hearings, determinations, etc.:
Public utility holding company filings, 52071–52072

Small Business Administration
NOTICES
Intergovernmental review of agency programs and activities, 52074–52075

State Department
NOTICES
Grants and cooperative agreements; availability, etc.:
Eastern Europe and independent states of former Soviet Union national competitive programs; administration by intermediaries, 52075–52077

Surface Transportation Board
NOTICES
Railroad operation, acquisition, construction, etc.:
Fay Penn Industrial Development Corp. et al., 52085–52086

Trade Representative, Office of United States
NOTICES
Generalized System of Preferences:
Annual Review (1996)—
Product and country practices petitions, public hearings, and list of articles, 52078–52079

Transportation Department
See Coast Guard
See Federal Aviation Administration
See Federal Highway Administration
See Surface Transportation Board
NOTICES
Agency information collection activities:
Submission for OMB review; comment request, 52079–52080
Aviation proceedings:
Agreements filed; weekly receipts, 52080

Treasury Department
See Comptroller of the Currency
See Customs Service
See Fiscal Service

United States Enrichment Corporation
NOTICES
Meetings; Sunshine Act, 52086

United States Information Agency
NOTICES
Art objects; importation for exhibition:
Life of a Patron: Zhou Lianggong and the Painters of Seventeenth Century China, 52086

Separate Parts In This Issue

Part II
Environmental Protection Agency, 52088–52169

Part III
Department of Education, 52172–52183

Part IV
Department of Housing and Urban Development, 52186–52187

Part V
Department of Agriculture, Animal and Plant Health Inspection Service, 52190–52213

Part VI
Department of Housing and Urban Development, 52216–52229

Part VII
Department of Defense, National Aeronautics and Space Administration, General Services Administration, 52232

Reader Aids
Additional information, including a list of public laws, telephone numbers, reminders, and finding aids, appears in the Reader Aids section at the end of this issue.

Electronic Bulletin Board
Free Electronic Bulletin Board service for Public Law numbers, Federal Register finding aids, and a list of documents on public inspection is available on 202–275–1538 or 275–0920.

CFR PARTS AFFECTED IN THIS ISSUE

A cumulative list of the parts affected this month can be found in the Reader Aids section at the end of this issue.

3 CFR

Proclamations:

6924 51767

7 CFR

301 52190

Proposed Rules:

201 51791
361 51791
997 51811
998 51811
999 51811

9 CFR

94 51769
113 51771

10 CFR

Proposed Rules:

30 51835
32 51835
40 51835
50 51835
52 51835
60 51835
61 51835
70 51835
71 51835
72 51835
110 51835
150 51835

12 CFR

2 51777

14 CFR

91 51782

Proposed Rules:

Ch. I (2 documents) 51845
39 (2 documents) 51845, 51847

19 CFR

Proposed Rules:

10 51849

24 CFR

1 52216
2 52216
8 52216
103 52216
104 52216
146 52216
180 52216
585 52186
3500 51782

31 CFR

Proposed Rules:

356 51851

34 CFR

614 51783
617 51783
619 51783
641 51783

37 CFR

Proposed Rules:

1 51855

40 CFR

52 51784
89 52088
90 52088
91 52088

Proposed Rules:

52 51877
281 51875

42 CFR

57 51787

46 CFR

108 51789
110 51789
111 51789
112 51789
113 51789
161 51789

47 CFR

73 51789

Proposed Rules:

90 51877

48 CFR

Proposed Rules:

1 52232
3 52232
4 52232
6 52232
8 52232
9 52232
12 52232
14 52232
16 52232
19 52232
22 52232
23 52232
25 52232
27 52232
29 52232
31 52232
32 52232
36 52232
37 52232
42 52232
45 52232
47 52232
49 52232
52 52232
53 52232

50 CFR

679 51789

Proposed Rules:

17 51878

Federal Register
Vol. 61, No. 194
Friday, Octover 4, 1996

Presidential Documents

Title 3—

The President

Proclamation 6924 of October 2, 1996

National Student Voter Education Day, 1996

By the President of the United States of America

A Proclamation

This election season marks the 25th anniversary of suffrage for Americans between the ages of 18 and 20. With the ratification of the 26th amendment to the Constitution in July of 1971, which lowered the voting age from 21 to 18, our Nation placed its trust in these young people and gave them a clearer voice in the halls of government.

America's bold experiment in self-government has inspired over 200 years of struggle for a more complete sense of justice and freedom, an effort etched in the history of the Constitution and its amendments. Emancipation, women's suffrage, civil rights, voting rights—all of these battles were fought and won by citizens of conscience and conviction who joined together to bring our Nation closer to the ideals enshrined in our Constitution of full and equal representation and participation.

Since 1971, America's young adults have taken their rightful place in this march toward true democracy and opportunity. Living up to the trust placed in them and meeting this profound responsibility of citizenship, they have voted in large numbers and have played a crucial role in choosing leaders and defining issues at the local, State, and national levels. Generous in spirit, optimistic and idealistic in outlook, they have often proved to be the conscience of our Nation.

Now we are entering a new era in our national existence. We are approaching a time unlike any in our past, in which ideas and information will move around the world at unprecedented speed, and in which there will be more opportunity for people to live out their dreams than ever before. I strongly urge today's young Americans to step forward and accept the challenge of helping to shape our Nation as we move into the 21st century.

Register to vote, study the issues and the candidates, and think seriously about what kind of country you want America to be. And then, like the millions of Americans who have gone before you, exercise what may be your most important right—the right to vote.

NOW, THEREFORE, I, WILLIAM J. CLINTON, President of the United States of America, by virtue of the authority vested in me by the Constitution and laws of the United States, do hereby proclaim October 2, 1996, as National Student Voter Education Day, I call upon Federal, State, and local officials, as well as leaders of civic, educational, and religious organizations to conduct meaningful ceremonies and programs in their schools, churches, and other community gathering places to foster a better understanding of the 26th amendment to the U.S. Constitution and the rights and duties of citizenship.

IN WITNESS WHEREOF, I have hereunto set my hand this second day of October, in the year of our Lord nineteen hundred and ninety-six, and of the Independence of the United States of America the two hundred and twenty-first.

William J. Clinton

[FR Doc. 96–25715
Filed 10–03–96; 8:45 am]
Billing code 3195–01–P

Rules and Regulations

Federal Register
Vol. 61, No. 194
Friday, October 4, 1996

This section of the FEDERAL REGISTER contains regulatory documents having general applicability and legal effect, most of which are keyed to and codified in the Code of Federal Regulations, which is published under 50 titles pursuant to 44 U.S.C. 1510.

The Code of Federal Regulations is sold by the Superintendent of Documents. Prices of new books are listed in the first FEDERAL REGISTER issue of each week.

DEPARTMENT OF AGRICULTURE

Animal and Plant Health Inspection Service, USDA.

9 CFR Part 94

[Docket No. 96–027–2]

Change in Disease Status of the Czech Republic and Italy Because of Rinderpest and Foot-and-Mouth Disease

AGENCY: Animal and Plant Health Inspection Service, USDA.

ACTION: Final rule.

SUMMARY: We are declaring the Czech Republic and Italy free of rinderpest and foot-and-mouth disease and adding these two countries to the list of countries that, although declared free of rinderpest and foot-and-mouth disease, are subject to special restrictions on the importation of their meat and other animal products into the United States. This rule removes the prohibition on the importation into the United States, from the Czech Republic and Italy, of live ruminants and fresh, chilled, and frozen meat from ruminants and relieves restrictions on the importation of milk and milk products from ruminants from these two countries. However, because the Czech Republic and Italy are not declared to be free of certain diseases of swine, including hog cholera and swine vesicular disease, the importation from these countries of swine and fresh, chilled, and frozen meat from swine continues to be restricted.

EFFECTIVE DATE: October 21, 1996.

FOR FURTHER INFORMATION CONTACT: Dr. John Cougill, Staff Veterinarian, Products Program, National Center for Import and Export, VS, APHIS, 4700 River Road Unit 40, Riverdale, MD 20737–1228, (301) 734–3399.

SUPPLEMENTARY INFORMATION:

Background

The regulations in 9 CFR part 94 (referred to below as the regulations) govern the importation into the United States of specified animals and animal products in order to prevent the introduction into the United States of various diseases, including rinderpest, foot-and-mouth disease (FMD), bovine spongiform encephalopathy, African swine fever, hog cholera, and swine vesicular disease. These are dangerous and destructive communicable diseases of ruminants and swine.

Section 94.1(a)(1) of the regulations provides that rinderpest or FMD exists in all countries of the world except those listed in § 94.1(a)(2), which have been declared to be free of these diseases. We will consider declaring a country to be free of rinderpest and FMD if, among other things, there have been no cases of these diseases reported there for at least the previous 1-year period and no vaccinations for rinderpest or FMD have been administered to swine or ruminants in that country for at least the previous 1-year period.

On July 9, 1996, we published in the Federal Register (61 FR 35987–35990, Docket No. 96–027–1) a proposal to amend the regulations by adding the Czech Republic and Italy to the list in § 94.1(a)(2) of countries declared free of rinderpest and FMD and to the list in § 94.11(a) of countries that are declared free of rinderpest and FMD but that are subject to special restrictions on the importation of their meat and other animal products into the United States. The proposal would remove the prohibition on the importation into the United States, from the Czech Republic and Italy, of live ruminants and fresh, chilled, and frozen meat from ruminants and would relieve restrictions on the importation, from these two countries, of milk and milk products from ruminants.

We solicited comments concerning our proposal for 60 days ending September 9, 1996. We did not receive any comments. The facts presented in the proposed rule still provide the basis for this final rule.

Therefore, based on the rationale set forth in the proposed rule, we are adopting the provisions of the proposal as a final rule without change.

Effective Date

This is a substantive rule that relieves restrictions and, pursuant to the provisions of 5 U.S.C. 553, may be made effective less than 30 days after publication in the Federal Register. This rule removes the prohibition on the importation into the United States, from the Czech Republic and Italy, of live ruminants and fresh, chilled, or frozen meat from ruminants and relieves restrictions on the importation, from these two countries, of milk and milk products from ruminants. We have determined that approximately 2 weeks are needed to ensure that the Animal and Plant Health Inspection Service personnel at ports of entry receive official notice of this change in the regulations. Therefore, the Administrator of the Animal and Plant Health Inspection Service has determined that this rule should be effective 15 days after publication in the Federal Register.

Executive Order 12866 and Regulatory Flexibility Act

This rule has been reviewed under Executive Order 12866. For this action, the Office of Management and Budget has waived its review process required by Executive Order 12866.

This rule alters the restrictions placed upon imports of live ruminants and meat, meat products, and dairy products derived from ruminants from the Czech Republic and Italy. The regulations in 9 CFR part 94 describe prohibited and restricted importations due to rinderpest, FMD, and other animal diseases. APHIS has determined that the Czech Republic and Italy meet the criteria for being recognized as free of rinderpest and FMD. However, because the Czech Republic and Italy share land borders and maintain trading relationships with FMD-affected countries, imports into the United States of live ruminants and meat, meat products, and dairy products derived from ruminants from the Czech Republic and Italy continue to be restricted under this rule. The rule does not relieve any restrictions imposed on the importation of swine and pork products because the Czech Republic and Italy are still considered to be affected with hog cholera and swine vesicular disease, and Italy is also considered to be affected with African swine fever.

We anticipate that the quantity of imports of live cattle, sheep, and goats from the Czech Republic and Italy into the United States will be minimally affected by the rule. Live cattle imports will still be restricted due to the trade practices of the Czech Republic and Italy and the fact that these countries share land borders with FMD-affected countries. In addition, the cattle industries in the Czech Republic and Italy are small relative to the enormous domestic market. Cattle inventories for 1994 were estimated to be 2.5 million head for the Czech Republic, 7.5 million head for Italy, and over 100 million head for the United States. Also, of the 2.5 million cattle and calves imported into the United States in 1994, more than 99 percent were from Canada and Mexico.

The population of sheep and goats in the Czech Republic is also very small relative to that of the United States (less than 2.5 percent of the size of the U.S. population in 1993). Italy has a sheep population that is slightly higher than that of the United States (11.7 million head in Italy and 10.9 million head in the United States in 1993). However, Italy is a strong net importer of sheep and goats (190,556 head imported and only 1,450 exported in 1993), while the United States is a strong net exporter of sheep and goats (28,420 head imported and 894,100 head exported in 1993). Of the few sheep that the United States does import, more than 99 percent are from Canada and Mexico.

The Czech Republic exports few live ruminants to the United States. In 1994, less than 0.0001 percent of the total value of total U.S. imports of live ruminants were from the Czech Republic. Italy exported no live ruminants to the United States in 1994. In fact, the United States did not import any cattle or sheep from the European Union in 1994. Neither Eastern nor Western Europe are usual sources of live ruminants for the United States, and any increase in ruminant importations from the Czech Republic or Italy prompted by this rule are likely to be negligible. Therefore, the impact on small domestic farmers of cattle, sheep, and goats is likely to be minimal.

Czech production of beef, veal, mutton, and goat meat in 1994 was about 2 percent of the size of U.S. production. Italian production of beef, veal, mutton, and goat meat in 1994 was about 1.2 million metric tons, or about 11 percent of the U.S. production of 11.3 million metric tons. The United States imports very little in the way of ruminant meat and ruminant meat products from Eastern or Western Europe in general. Moreover, more than 88 percent of the imports of ruminant meat and ruminant meat products that come into the United States are from Australia, Canada, and New Zealand. It is unlikely that either the Czech Republic or Italy will be willing or able to redirect a significant portion of its ruminant meat production for export exclusively to the United States as a result of the rule, given that restrictions remain in place for imports into the United States. Even if the Czech Republic were able to redirect its entire production of these products for export to the United States, this production was only one-fifth the size of total U.S. imports of these products in 1994. Moreover, Italy is a significant net importer of beef, veal, mutton, and other products such as offal and meat extracts. Therefore, any effect of the rule on domestic prices or supplies is likely to be negligible, and thus the impact on small domestic producers will be minimal.

We also anticipate that the effect of the rule on the importation of dairy products from the Czech Republic and Italy will be minimal. Czech production of dairy products is small relative to that of the United States. In 1993, Czech dairy product production was about 5 percent of the value of U.S. production. The United States imports little in the way of dairy products from the Czech Republic or from Eastern Europe in general. In 1994, U.S. imports of dairy products were valued at $963.4 million; of this total, less than 5 percent originated in Eastern Europe and less than 0.1 percent in the Czech Republic. The Czech Republic is a significant producer and exporter of butter. However, butter is already exempt from the provisions of 9 CFR part 94 and thus will be unaffected by the rule. For dairy products in general, Italy is a significant net importer and not likely to be willing or able to redirect a significant portion of its production exclusively to the United States, which is a significant net exporter. Italy's major dairy export to the United States is cheese. Because solid cheeses are already exempt from the provisions of 9 CFR part 94, there is no reason to believe that imports of cheese will increase significantly due to this rule. For these reasons and given the fact that restrictions will remain in place, it is unlikely that the rule will significantly alter imports of dairy products into the United States. Therefore, the impact on small domestic dairy producers should be minimal.

Any effects of the rule on importers of embryos, semen, other genetic material, or breeding animals is also likely to be minimal. We anticipate that, after the rule becomes effective, there could be an initial increase in the volume of these products flowing into the United States to diversify the genetic composition of domestic cattle. (In particular, there has been a great deal of interest expressed in obtaining genetic material of beef cattle from Italy.) However, any temporary increase in volume will most likely be small relative to total U.S. imports of these products. The United States is a net exporter of both bovine semen and cattle embryos. In 1994, the value of U.S. bovine semen and cattle embryo imports was $4.3 million and $266,000, respectively, while U.S. exports of bovine semen and cattle embryos were valued at $7.9 million and $6.4 million, respectively. Given this trade balance and the size differences between the U.S. and Czech and Italian cattle industries, the amount imported of each type of genetic material is likely to be minimal and have a minimal impact on small domestic cattle producers.

In conclusion, declaring the Czech Republic and Italy free of rinderpest and FMD will likely have a negligible impact on domestic small entities. Imports from the Czech Republic and Italy of ruminants and ruminant products continue to be restricted. In addition, the U.S. markets for these products are large relative to the Czech and Italian markets, and Italy is a net importer of most of these products. Under these conditions, it is unlikely that either the Czech Republic or Italy will be willing or able to redirect a significant portion of the production of these products exclusively to the United States.

Under these circumstances, the Administrator of the Animal and Plant Health Inspection Service has determined that this action will not have a significant economic impact on a substantial number of small entities.

Executive Order 12988

This rule has been reviewed under Executive Order 12988, Civil Justice Reform. This rule: (1) Preempts all State and local laws and regulations that are inconsistent with this rule; (2) has no retroactive effect; and (3) does not require administrative proceedings before parties may file suit in court challenging this rule.

Paperwork Reduction Act

In accordance with section 3507(d) of the Paperwork Reduction Act of 1995 (44 U.S.C. 3501 et seq.), the information collection or recordkeeping requirements included in this final rule have been approved by the Office of Management and Budget (OMB). The

assigned OMB control number is 0579–0015.

List of Subjects in 9 CFR Part 94

Animal diseases, Imports, Livestock, Meat and meat products, Milk, Poultry and poultry products, Reporting and recordkeeping requirements.

Accordingly, 9 CFR part 94 is amended as follows:

PART 94—RINDERPEST, FOOT-AND-MOUTH DISEASE, FOWL PEST (FOWL PLAGUE), VELOGENIC VISCEROTROPIC NEWCASTLE DISEASE, AFRICAN SWINE FEVER, HOG CHOLERA, AND BOVINE SPONGIFORM ENCEPHALOPATHY: PROHIBITED AND RESTRICTED IMPORTATIONS

1. The authority citation for part 94 continues to read as follows:

Authority: 7 U.S.C. 147a, 150ee, 161, 162, and 450; 19 U.S.C. 1306; 21 U.S.C. 111, 114a, 134a, 134b, 134c, 134f, 136, and 136a; 31 U.S.C. 9701; 42 U.S.C. 4331 and 4332; 7 CFR 2.22, 2.80, and 371.2(d).

§ 94.1 [Amended]

2. In § 94.1, paragraph (a)(2) is amended by adding the words ''Czech Republic,'' immediately after the words ''Costa Rica,'' and by adding the word ''Italy,'' immediately after the word ''Ireland,''.

§ 94.11 [Amended]

3. In § 94.11, the first sentence in paragraph (a) is amended by adding the words ''Czech Republic,'' immediately after the word ''Chile,'' and by adding the word ''Italy,'' immediately after the word ''Hungary,''.

Done in Washington, DC, this 30th day of September 1996.

A. Strating,

Acting Administrator, Animal and Plant Health Inspection Service.

[FR Doc. 96–25503 Filed 10–3–96; 8:45 am]

BILLING CODE 3410–34–P

---

9 CFR Part 113

[Docket No. 92–124–2]

Viruses, Serums, Toxins, and Analogous Products; Antibody Products

AGENCY: Animal and Plant Health Inspection Service, USDA.

ACTION: Final rule.

SUMMARY: This rule amends the regulations by revising the designation for a group of standard requirements from ''Blood Origin Products'' to ''Antibody Products;'' revising five of the six existing standard requirements in the group; removing the sixth; and adding a new standard requirement for products intended for the treatment of failure of passive transfer. These amendments are necessary in order to update the standard requirements for veterinary biological products and to provide for their regulation in a manner that is more consistent with current scientific knowledge and understanding.

EFFECTIVE DATE: November 4, 1996

FOR FURTHER INFORMATION CONTACT: Dr. David A. Espeseth, Deputy Director, Veterinary Biologics, BBEP, APHIS, 4700 River Road Unit 148, Riverdale, MD 20737–1237, (301) 734–8245.

SUPPLEMENTARY INFORMATION:

Background

In accordance with the regulations in 9 CFR part 113 (hereinafter referred to as ''the regulations''), standard requirements are prescribed for the preparation of veterinary biological products. A standard requirement consists of specifications, procedures, and test methods that define the standards of purity, safety, potency, and efficacy for a veterinary biological product. Where a standard requirement for a product does not exist, production procedures and specifications for purity, safety, and potency of a biological product are provided in an Outline of Production filed with the Animal and Plant Health Inspection Service (APHIS). For consistency of review and uniformity of standards, standard requirements are codified in the regulations.

In recent years, the number of license applications received by APHIS for antibody products has increased substantially. Historically, the antibody source material for most of these products has been blood. Increasingly, however, the Agency is being presented with products for licensure that are derived from other sources such as colostrum, milk, and eggs. Standard requirements for many of these products are not codified in the regulations, and many of the products are not adequately addressed by the general requirements for blood origin products in § 113.450.

On July 23, 1993, we published in the Federal Register (58 FR 39462–39467, Docket No. 92–124–1) a proposed rule that would update the regulations to provide more consistent licensing standards and more appropriate product-indication statements that, in turn, should provide greater guidance to manufacturers and lead to more reliable products.

We solicited comments concerning our proposal for 60 days ending September 21, 1993. We received twelve sets of comments by that date. They were from eight manufacturers of veterinary biological products, three consultants, and a national trade association.

One commenter asked what the impact of the rule would be on a product that is currently licensed by APHIS as a veterinary biological but for which no biologic-type claim (i.e., a claim that a product functions through an immunologic mechanism to diagnose, prevent, or alleviate animal disease) is made, overtly or by implication. The commenter noted that the proposed regulations do not seem to specifically address this category of product. In response to the commenter, APHIS notes that these type of products were licensed at the request of producers for use in the nonspecific treatment of anemia, hemorrhage, or shock that may follow injury to horses. The regulations referred to such products as ''normal serum.'' This regulation does not specifically address normal serum because it is not a product which is required to be licensed. Therefore, no new licenses shall be issued for normal serum, which is not intended to affect the immune mechanism. APHIS will work with the producers of any such product that may be currently licensed to resolve any questions involving these type of products. No change to the regulations is made in response to this comment.

One commenter criticized the proposed nomenclature for products intended for the treatment of failure of passive transfer (FPT) proposed in § 113.450(b)(3). The commenter asserted that to refer to these products as ''IgG'' is misleading because such products may contain ''many other protective factors.'' In response to the commenter, APHIS believes the nomenclature proposed for products for the treatment of FPT is appropriate for this category of biological product. The reason for this is that FPT is most commonly defined as a below normal level of circulating, maternally derived immunoglobulin G (IgG) in the neonate, the awareness that IgG is measured in the establishment of product efficacy and potency, and the understanding that the ''other protective factors'' (i.e., substances other than immunoglobulins) cited are at best very poorly characterized. No change to the regulations is made in response to this comment.

Three commenters suggested other changes to proposed § 113.450(c). Two of the commenters stated that the proposed regulations precluded the use of slaughterhouse blood as an antibody

source and opined that the proposed restriction is unwarranted. APHIS believes that, unless slaughtered animals are from a herd that is maintained at a licensed establishment, physically examined, and tested to ensure freedom from infectious disease, their blood is unacceptable as a source of antibody. In this respect, the proposed regulations differ little from the current regulations. Assurance of the health of donor animals is necessary to reduce the risk of product contamination from infectious agents. No change to the regulations is made in response to these comments.

The other commenter addressed the provision in proposed § 113.450(c) that would exempt cattle from Grade A dairies supplying lacteal secretions for the manufacture of a veterinary antibody product from being maintained at a licensed establishment. The commenter recommended that the exemption be broadened to include cattle from Grade B dairies. In response to the commenter, APHIS notes that while Grade A dairies are required to conform to the provisions of the Food and Drug Administration's Grade ''A'' Pasteurized Milk Ordinance, the regulations that apply to dairies supplying Manufacturing Grade milk are less uniform and usually less stringent. In addition, monitoring of ''Grade B'' dairies is significantly less rigorous. Exempting Grade A dairies in § 113.450(c) strikes an appropriate balance between assuring pure, safe, and efficacious products and recognizing that maintenance of a dairy herd of sufficient size at a licensed establishment would be an economic burden. No change to the regulations is made in response to this comment.

Three commenters provided remarks concerning proposed § 113.450(e). One commenter felt that the specified radiation dose should be reduced from 3.0 megarads to at least 2.5 megarads to be more consistent with published information in this area. APHIS agrees with this comment. In addition, we believe the rules should allow a narrow range in the level of radiation, since it is often difficult to assure that an exact radiation dose will be delivered. In response to this comment, the regulations in §§ 113.450(e)(1), 113.450(e)(2), and 113.450(e)(3) are revised to indicate that the level of ionizing radiation to which applicable source material must be subjected shall be at least 2.5 megarads, and that a maximum radiation dosage is to be specified in the Outline of Production, based on data for that product.

The second commenter stated that the proposed treatment methods for the inactivation of extraneous agents would be too limited and that other methods of treatment should be considered by the Agency. In response to the commenter, APHIS agrees that other procedures may be as or more effective than those proposed. We agree that other procedures may be more appropriate for some source materials and that greater flexibility is needed. We are therefore amending the introductory paragraph of proposed § 113.450(e) to allow the use of another procedure, provided it is demonstrated to be at least as effective by data acceptable to APHIS and the procedure chosen is described in the filed Outline of Production for the product. Data submitted should demonstrate the alternative procedure is at least as effective against a battery of potential contaminating pathogenic microorganisms as the thermal- and irradiation-treatment methods specified.

The third commenter asserted that treatment of certain source materials is unnecessary because of the manner in which the materials are obtained. The commenter added that for certain materials, the proposed irradiation regimen would be acceptable (i.e., it would not render the materials unsuitable for use in production) only if the materials were manipulated in special, costly ways prior to treatment. In response to the commenter, the proposed regulations are the same as the current regulations in requiring treatment of source materials. APHIS believes that treatment that is demonstrated to be effective in eliminating viable pathogenic microorganisms is an essential component of an established protocol to ensure that an antibody product poses minimal risk for transmitting a potential pathogen. Regarding the claim that irradiation is unsuitable for certain substances, APHIS believes that ionizing radiation at the levels prescribed may impact the physical character of some source materials. Many of these materials, however, may be successfully heat treated. Because some source materials may not be amenable to either heating or exposure to ionizing radiation, APHIS believes flexibility should be provided in the regulations to permit the use of other procedures, provided that they can be shown to be as effective as the proposed methods for the intended purpose. As explained above, we have amended § 113.450(e) to provide such flexibility.

One commenter expressed opposition to the regulations in proposed § 113.450(h)(2) that require that any retest for purity of dried products for oral administration be conducted within 21 days of the original test. The commenter stated that ''valid circumstances may arise that prevent a test from being restarted within the 21 day time frame.'' In response to the commenter, we believe that some time limit must be prescribed, that it would be improper to allow a very long period of time to elapse before retesting, and that the proposed period would, in almost all situations, prove acceptable to the manufacturer. If we are presented with legitimate ''valid circumstances'' by a manufacturer, an extension of the time period for retest could be considered under the provisions of § 113.4. No change to the regulations is made in response to this comment.

Ten commenters expressed opinions concerning proposed § 113.499, which refers to products for the treatment of FPT. Eight of the commenters felt it was inappropriate to restrict the recommendation of a product to use only in neonates of the same species as that of antibody origin. It appears that five of the commenters misinterpreted the regulations, incorrectly interpreting them to mean that the restriction extended to all antibody products, not just to products intended for the treatment of FPT. In response to the three commenters who correctly interpreted the restriction to apply only to products intended for the treatment of FTP, APHIS believes its position is appropriate. An acceptable FPT product is one that, at the recommended dose, raises the serum IgG concentration of maternal-IgG-deficient neonates by a specified minimum amount. This increase in serum IgG concentration might be expected to confer a significant degree of protection against a broad spectrum of potential pathogens. With few exceptions, however, true broad-spectrum protection by FPT products has not been demonstrated. Furthermore, the potency test for such products, conducted to ensure that a dose of product has at least a minimum quantity of IgG, does not measure the ability of the product to protect against or alleviate disease. Upon considering factors such as antibody functionality, antibody half-life, and the spectrum of antibody activity, the Agency believes that the meaningful clinical efficacy of heterologous (i.e., derived from a different species) FPT products is simply too uncertain to warrant their licensure. No change to the regulations is made in response to these comments.

One commenter stated that the proposed requirement that parenterally administered products for the treatment of FPT should be recommended for use only in animals 120 hours of age or less would be too restrictive. In response to the commenter, APHIS notes that some

manufacturers of parenterally-administered FPT products have recommended that the products be used in animals of virtually any age, even though FPT is limited to neonatal animals. We believed that the inclusion in the proposed regulations of a prohibition against recommending such products for use in older animals would aid in preventing misuse of the product. However, we agree that the proposed rule may have been too restrictive in this regard. Therefore, in response to the comment, APHIS has revised the regulations in § 113.499 to specify that parenterally administered products for the treatment of FPT be recommended for use only in neonatal animals.

Two commenters expressed concern with the regulations in proposed § 113.499(a) pertaining to the establishment of an IgG Reference Product. One commenter stated that ''IgG Reference Product'' and ''IgG Species Standard'' should be more clearly defined and that requiring the establishment of an IgG Reference Product was inappropriate. The commenter described an alternative method for establishing product efficacy and ensuring adequate potency of production serials that was not entirely clear. In response to the commenter, we have amended the regulations to define more completely ''IgG Reference Product'' and ''IgG Species Standard''. In further response to the commenter, we believe that, based on the high degree of variability between radial immunodiffusion (RID) kits for IgG, an IgG Reference Product must be qualified (i.e., shown through efficacy testing to be an acceptable potency test reference).

The other commenter stated that the proposed requirement that dose size be based on body weight should be eliminated. The commenter asserted that because FPT products are usually marketed in a single dose size for all animals for which they are intended, and labels for veterinary biologics are required to state that the entire contents of a container must be used when first opened, portions of containers will often have to be discarded. The commenter also believed that the preparation of an IgG Species Standard would be improper because a standard appropriate for one species would not be appropriate for another. In response to the commenter, we acknowledge that historically, recommended dosages of FPT products have not been linked to body weight and that consumers have come to expect this. As a result, we are amending the regulations to indicate that an IgG Reference Product may be established with a single-dose size for all animals, as long as the animals used are at or near the maximum weight for neonates of the species. Regarding the IgG Species Standard, it is not APHIS' intent to have a single standard for all species. Different standards would be prepared for calves, foals, pigs, and so on.

In addition to the comments received, APHIS is making the following changes to the regulations for clarity. APHIS notes that the test media specified in proposed §§ 113.450(h)(2)(i) and 113.450(h)(2)(ii) are quite selective. It is possible, however, that an occasional noncoliform or nonSalmonella growth may appear on one or more test plates. To allow for this possibility, the regulations under these sections are revised to change the term ''growth'' to ''characteristic growth'' to indicate that the purity test is intended to screen for the growth of specified bacteria.

APHIS also notes that some antibody source materials—for example, whey from cheese making operations—may contain high levels of innocuous bacteria, and that biological products made from these materials may contain so many bacteria per dose that rehydrated product would have to be further diluted to do a meaningful total bacterial count as proposed in § 113.450(h)(2)(iv). To allow for this, the regulations are revised to provide for an appropriate dilution of the rehydrated sample prior to its addition to the test plates.

APHIS further notes that the regulations in §§ 113.499(a) and 113.499(c) may not make it clear whether one IgG measurement is to be obtained from each of five radial immunodiffusion (RID) plates or if five IgG measurements may be obtained from just one, or possibly two, RID plates. In addition, APHIS believes that five IgG measurements of each of the paired serum samples to qualify an IgG Reference Product is unnecessary. The regulations are revised to specify that ''five IgG measurements'' be made (§ 113.499(a)(6) and (c)) and to replace the proposed five replicate tests with one concurrent test for paired serum samples (§ 113.499(a)(5)).

In addition, APHIS notes that because the RID assay is semiquantitative, five IgG measurements of two samples instead of one, as proposed, should be made for retests for potency of serials of FPT products. The regulations are revised in § 113.499(c) to specify that two samples of a serial be included in a retest instead of one. This is consistent with retest requirements for other product types.

Therefore, based on the rationale set forth in the proposed rule and in this document, we are adopting the provisions of the proposed rule as a final rule, with the changes discussed in this document. The agency will review, on a case-by-case basis, within one year after the effective date of this rule, products that may be affected by this rule to ensure that such products come into conformance by the end of the review period.

Executive Order 12866 and Regulatory Flexibility Act

This rule has been reviewed under Executive Order 12866. The rule has been determined to be not significant for the purposes of Executive Order 12866 and, therefore, has not been reviewed by the Office of Management and Budget.

The amendments to the regulations should, in most instances, either have no significant economic impact or have a positive economic impact. For example, manufacturers will not be restricted to pasteurization for the treatment of source materials. Where this final rule may have a negative economic impact on manufacturing, such impact should be minimal. A negative impact may arise because this rule prohibits recommendations for cross-species use of FPT products. Notification, however, that such a prohibition was being considered was given by APHIS over 7 years ago.

Sections 113.450 through 113.455 are amended to reflect current scientific understanding and to establish uniform standards for antibody products made from substances other than blood. One such amendment is the provision for use of other procedures for eliminating potential contaminating microorganisms. The Agency believes the amendment is important because the Agency intends to require that all antibody products be subjected to an appropriate procedure for inactivation of potential contaminating microorganisms or another procedure demonstrated to be equally effective in eliminating viable pathogenic microorganisms. Currently, equine plasma products are exempted from heat treatment by approval of Outlines of Production. At the time this exemption was given, no other products were available for treatment of FPT in foals and it was believed that plasma-based products were not amenable to heat treatment. Certain equine FPT products that are now licensed are subjected to a treatment step in their manufacture. The Agency believes that no special benefit associated with the biologic-type claim has been demonstrated for plasma-based products to offset the added risk associated with no procedure for elimination. The amendment will give the manufacturers

of antibody products derived from equine plasma the option to use other procedures for such products provided they are demonstrated to be equally effective as heat or irradiation treatment by data acceptable to APHIS.

Section 113.499 is added to provide standards for products for the treatment of failure of passive transfer. The addition of the provision in this section that restricts the use of such products to the same species as that of antibody origin will economically impact the one manufacturer of an FPT product currently approved for cross-species use. The firm was notified over 7 years ago of our intent to establish such regulations that would restrict the recommendations for use of its product. The Agency believes the firm has been given adequate notice to provide compelling efficacy and potency data or prepare for the removal of the cross-species recommendation from labeling and advertising. Given the length of time from notification, we believe the loss of the recommendation should result in minimal economic loss to the producer.

The addition of § 113.499 may initially increase the cost to some FPT product manufacturers as necessary label changes are made and IgG Reference Products are qualified. This is not unexpected when a standard requirement is codified. No negative economic impact beyond that initially incurred is anticipated. Firms will be given one year from the effective date of this rule to come into compliance with it.

We do not expect any increase in cost to the other biologics manufacturers affected by this rule.

Under these circumstances, the Administrator of the Animal and Plant Health Inspection Service has determined that this action will not have a significant economic impact on a substantial number of small entities.

Executive Order 12372

This program/activity is listed in the Catalog of Federal Domestic Assistance under No. 10.025 and is subject to Executive Order 12372, which requires intergovernmental consultation with State and local officials. (See 7 CFR part 3015, subpart V.)

Paperwork Reduction Act

This rule contains no new information collection or recordkeeping requirements under the Paperwork Reduction Act of 1995 (44 U.S.C. 3501 *et seq.*).

Executive Order 12988

This final rule has been reviewed under Executive Order 12988, Civil Justice Reform. It is not intended to have retroactive effect. This rule would not preempt any State or local laws, regulations, or policies, unless they present an irreconcilable conflict with this rule. There are no administrative procedures that must be exhausted prior to a judicial challenge to the provisions of this rule.

Regulatory Reform

This action is part of the President's Regulatory Reform Initiative, which, among other things, directs agencies to remove obsolete and unnecessary regulations and to find less burdensome ways to achieve regulatory goals.

List of Subjects in 9 CFR Part 113

Animal biologics, Exports, Imports, Reporting and recordkeeping requirements.

Accordingly, 9 CFR part 113 is amended as follows:

PART 113—STANDARD REQUIREMENTS

1. The authority citation for part 113 continues to read as follows:

Authority: 21 U.S.C. 151–159; 7 CFR 2.22, 2.80, and 371.2(d).

2. The undesignated center heading preceding § 113.450 is revised to read ''ANTIBODY PRODUCTS''.

3. Section 113.450 is revised to read as follows:

§ 113.450 General requirements for antibody products.

Unless otherwise prescribed in a Standard Requirement or in a filed Outline of Production, all antibody products shall meet the applicable requirements of this section.

(a) *Terminology.* The following terms in the regulations and standards concerning antibody products shall mean:

Antibody. An immunoglobulin molecule, having a precise glycoprotein structure, produced by certain cells of the B lymphocyte lineage in response to antigenic stimulation, and functioning to specifically bind and influence the antigens that induced its synthesis.

IgG (Immunoglobulin G). One of the several recognized classes of structurally related glycoproteins whose representatives include all known antibodies.

Monoclonal. Produced by, or derived from, the offspring of a single common progenitor cell.

Failure of passive transfer. A condition of neonates characterized by an abnormally low concentration of circulating maternal IgG.

(b) *Nomenclature.* Antibody products shall be named as follows:

(1) *Virus-specific products.* The true name of a virus-specific product shall: include the term ''antibody,'' specify the disease for which the product is intended, and indicate the type of animal that supplied the component antibodies. If the antibodies are monoclonal, the term ''monoclonal'' shall be used. Example: ''Duck Virus Hepatitis Antibody, Duck Origin.''

(2) *Bacterium-specific products.* The true name of a bacterium-specific product shall: include the term ''antibody'' if the component antibodies are directed against a nontoxin antigen or the term ''antitoxin'' if the component antibodies are directed against toxin, specify the organism against which the product is intended, and indicate the type of animal that supplied the component antibodies. If the antibodies are monoclonal, the term ''monoclonal'' shall be used. Example: ''Escherichia Coli Monoclonal Antibody, Murine Origin.''

(3) *Failure of passive transfer products.* The true name of a product for treatment of failure of passive transfer shall include the term ''IgG'' and indicate the type of animal that supplied the component IgG. Example: ''Bovine IgG.''

(4) *Combination products.* The true name of a product for treatment of failure of passive transfer as well as for the prevention and/or alleviation of a specific viral or bacterial disease shall be named according to the nomenclature prescribed above for virus-specific or bacterium-specific products.

(c) *Animals.* All animals used in the production of antibody products shall be healthy. Their health status shall be determined by physical examination by, or under the direct supervision of, a licensed veterinarian and by tests for infectious diseases. Such animals shall be maintained at licensed establishments: *Provided,* That cows maintained at Grade A dairies (or the equivalent) that are not injected with antigens for the purpose of stimulating the production of specific antibodies and that are used only for the purpose of supplying lacteal secretions are exempt from being maintained at a licensed establishment.

(1) No animal shall be used while showing clinical signs of disease. The presence of minor localized injuries or lesions (contusions, lacerations, burns, etc.) without body temperature elevation and without significant pain

and distress shall not be construed as clinical evidence of disease.

(2) Before first use and on a regular basis, all animals used in the manufacture of antibody products shall be individually subjected to applicable tests for infectious diseases. Records of all test results shall be maintained. An animal which tests positive for an infectious disease shall not be used in the manufacture of antibody products. Retests shall be conducted as deemed necessary by the Administrator.

(i) Before first use, horses shall be tested as follows for:

(A) Equine infectious anemia (EIA) at a laboratory approved by APHIS.

(B) Piroplasmosis, dourine, and glanders at the National Veterinary Services Laboratories.

(C) Brucellosis at a laboratory approved by APHIS. Horses with standard agglutination titers of 1:50 or less can be used for production. Horses with standard agglutination titers equal to or greater than 1:100 may be tested by the Rivanol or card tests. Reactors to these supplemental tests shall not be used for production. Nonreactors to the supplemental tests shall be retested after 30 days. If the supplemental tests are negative and the agglutination titer has not increased, the animal may be used for production. Otherwise, the animal is unsatisfactory for this purpose.

(ii) Horses shall be retested annually for EIA and, if housed or pastured with any other species, shall be retested annually for brucellosis.

(iii) Before first use, cattle shall be tested as follows for:

(A) Tuberculosis by an accredited veterinarian: *Provided,* That cattle at Grade A dairies supplying only lacteal secretions need only be tested for tuberculosis in accordance with applicable Milk Ordinances or similar laws or regulations.

(B) Brucellosis at a laboratory approved by APHIS. Cattle with standard agglutination titers of 1:50 or less can be used for production. Cattle with standard agglutination titers equal to or greater than 1:100 may be tested by the Rivanol or card tests. Reactors to these supplemental tests shall not be used for production. Nonreactors to the supplemental tests shall be retested after 30 days. If the supplemental tests are negative and the agglutination titer has not increased, the animal may be used for production; otherwise, the animal is unsatisfactory for this purpose. Cattle at Grade A dairies supplying only lacteal secretions need not be tested individually for brucellosis if a portion of their secretions contribute to the herd milk pool tested as required by the brucellosis ring test. An animal of a herd testing positive by this test shall not be used in production.

(iv) Cattle shall be retested annually for both tuberculosis and brucellosis. Cattle at Grade A dairies supplying only lacteal secretions need only be tested for tuberculosis in accordance with applicable Milk Ordinances or similar laws or regulations. Cattle at Grade A dairies supplying only lacteal secretions need not be tested individually for brucellosis if a portion of their secretions contribute to the herd milk pool tested as required by the brucellosis ring test. An animal of a herd testing positive by this test shall not be used in production.

(v) For other species, appropriate tests and the frequency with which they are applied shall be specified in the filed Outline of Production for the product.

(vi) If a positive result is obtained on any prescribed test, the positive animal(s) shall be removed from the herd and the remaining animals retested. Production shall not be renewed until a negative herd test is obtained not less than 28 days following removal of the positive animal(s).

(vii) Negative animals shall be maintained separate and apart from untested or positive animals of any species. Production animals shall not be used for any other purpose, such as testing, work, or recreation.

(d) *Collection procedures.* Blood, lacteal secretions, and egg material shall be collected as described in the filed Outline of Production for the product.

(e) *Ingredient handling and processing.* Blood derivatives (serum, plasma, etc.), lacteal secretions, and egg material used in the production of antibody products shall be subjected to an appropriate procedure for the inactivation of potential contaminating microorganisms. The procedure shall be one of those described below and specified in the filed Outline of Production for the product: *Provided,* That another procedure may be substituted if demonstrated to be at least as effective by data acceptable to APHIS and specified in the filed Outline of Production for the product. These data are expected to come from a study comparing the effectiveness of the established and substitute procedures against a satisfactory battery of potential contaminating microorganisms.

(1) Blood derivatives of equine origin shall be heated at 58.0–59.0° C for 60 minutes, and blood derivatives of bovine, porcine, or other origin shall be heated at 58.0–59.0° C for 30 minutes. In lieu of heat treatment, blood derivatives of any origin may be treated with at least 2.5 megarads of ionizing radiation, with a maximum radiation dosage specified in the filed Outline of Production for the product.

(2) Lacteal secretions shall be heated as described in paragraph (e)(1) of this section, or shall be pasteurized at either 72° C for 15 seconds or 89° C for 1 second using appropriate equipment. In lieu of the heat treatment regimens prescribed, lacteal secretions may be treated with at least 2.5 megarads of ionizing radiation, with a maximum radiation dosage specified in the Outline of Production for the product.

(3) Egg material shall be heated at 58.0–59.0° C for 30 minutes, or treated with at least 2.5 megarads of ionizing radiation, with a maximum radiation dosage specified in the filed Outline of Production for the product.

(4) Blood derivatives, lacteal secretions, and egg material shall not contain preservatives at the time of heat treatment, and immediately after heat treatment shall be cooled to 7° C or lower.

(5) Licensees shall keep detailed records as to each batch treated and each serial of product prepared for marketing. Recording charts shall bear full information concerning the material treated and tests made of the equipment used for treatment.

(f) *Preservatives.* Liquid antibody products, except those immediately frozen following preparation and maintained in a frozen state until time of use, shall contain at least one preservative from the following list, within the range of concentration set forth:

(1) Phenol 0.25 to 0.55 percent, or

(2) Cresol 0.10 to 0.30 percent, and/or

(3) Thimerosal 0.01 to 0.03 percent, or

(4) Other preservative(s) specified in the filed Outline of Production for the product.

(g) *Antigens for hyperimmunization.* If animals are hyperimmunized to generate antibodies for a product for the prevention and/or alleviation of a specific infectious disease, and a USDA-licensed veterinary biological product is not employed for this purpose, the following shall apply:

(1) For each antigen, a Master Seed shall be established.

(i) Bacterial Master Seeds shall be tested for purity and identity as prescribed for live bacterial vaccines in § 113.64.

(ii) Viral Master Seeds shall be tested for purity and identity as prescribed for live virus vaccines in § 113.300.

(2) The maximum allowable passage level of the hyperimmunizing antigen shall be the passage level of the antigen used to generate product shown to be

efficacious and shall not exceed 10 passages from the Master Seed.

(h) *Purity tests.* Final container samples of each serial and each subserial shall be tested for viable bacteria and fungi as follows:

(1) Dried products for parenteral administration and liquid products shall be tested as prescribed in § 113.26.

(2) For dried products for oral administration, 10 final container samples shall be reconstituted with sterile water at the volume recommended on the label and tested for the following contaminants:

(i) *Coliforms.* One milliliter of each rehydrated sample shall be pipetted into a 100 × 15 mm petri dish and 10–15 ml of violet red bile agar at 45–50° C added. The plate shall be manipulated to coat its entirety with the agar-sample mixture and allowed to stand until the mixture solidifies. The plate shall then be incubated at 35° C for 24 hours. A positive control plate and a negative control plate shall be prepared at the same time and in the same manner as the plates containing samples of the serial. All plates shall be examined at the end of the incubation period. If characteristic growth is observed on the negative control plate, or no characteristic growth is observed on the positive control plate, the test shall be considered inconclusive and may be repeated. If characteristic growth is observed on any of the 10 plates containing samples of the serial, one retest to rule out faulty technique may be conducted on samples from 20 final containers. If characteristic growth is observed on any of the retest plates, or if a retest is not initiated within 21 days of the completion of the original test, the serial or subserial is unsatisfactory.

(ii) *Salmonellae.* One milliliter of each rehydrated sample shall be pipetted into a 100 × 15 mm petri dish and 10–15 ml of brilliant green agar at 45–50° C added. The dish shall be manipulated to coat its entirety with the agar-sample mixture and allowed to stand until the mixture solidifies. The plate shall then be incubated at 35° C for 24 hours. A positive control plate and a negative control plate shall be prepared at the same time and in the same manner as the plates containing samples of the serial. All plates shall be examined at the end of the incubation period. If characteristic growth is observed on the negative control plate, or no characteristic growth is observed on the positive control plate, the test shall be considered inconclusive and may be repeated. If characteristic growth is observed on any of the 10 plates containing samples of the serial, one retest to rule out faulty technique may be conducted on samples from 20 final containers. If characteristic growth is observed on any of the retest plates, or if a retest is not initiated within 21 days of the completion of the original test, the serial or subserial is unsatisfactory.

(iii) *Fungi.* One milliliter of each rehydrated sample shall be pipetted into a 100 × 15 mm petri dish and 10–15 ml of appropriately acidified potato dextrose agar at 45–50° C added. The plate shall be manipulated to coat its entirety with the agar-sample mixture and allowed to stand until the mixture solidifies. The plate shall then be incubated at 20–25° C for 5 days. A positive control plate and a negative control plate shall be prepared at the same time and in the same manner as the plates containing samples of the serial. All plates shall be examined at the end of the incubation period. If growth is observed on the negative control plate, or no growth is observed on the positive control plate, the test shall be considered inconclusive and may be repeated. If growth is observed on any of the 10 plates containing samples of the serial, one retest to rule out faulty technique may be conducted on samples from 20 final containers. If growth is observed on any of the retest plates, or if a retest is not initiated within 21 days of the completion of the original test, the serial or subserial is unsatisfactory.

(iv) *Total bacterial count.* One milliliter of each rehydrated sample, undiluted or diluted as prescribed in the Outline of Production, shall be pipetted into a 100 × 15 mm petri dish and 10–15 ml of tryptone glucose extract agar at 45–50° C added. The plate shall be manipulated to coat its entirety with the agar-sample mixture and allowed to stand until the mixture solidifies. The plate shall then be incubated at 35° C for 48 hours. A positive control plate and a negative control plate shall be prepared at the same time and in the same manner as the plates containing samples of the serial. All plates shall be examined at the end of the incubation period. If growth is observed on the negative control plate, or no growth is observed on the positive control plate, the test shall be considered inconclusive and may be repeated. If the average number of bacterial colonies on the 10 plates containing samples of the serial exceeds that specified in the filed Outline of Production for the product, one retest to rule out faulty technique may be conducted on samples from 20 final containers. If the average number of bacterial colonies on the retest plates exceeds that specified in the filed Outline of Production for the product, or if a retest is not initiated within 21 days of the completion of the original test, the serial or subserial is unsatisfactory.

(i) *Safety tests.* Bulk or final container samples of each serial shall be tested as prescribed in § 113.33(b). Dried product shall be reconstituted as indicated on the label and 0.5 ml injected per mouse.

4. In § 113.451, paragraphs (b) and (c) are removed, paragraph (d) is redesignated paragraph (b), and the introductory text of the section is revised to read as follows:

§ 113.451 Tetanus Antitoxin.

Tetanus Antitoxin is a specific antibody product containing antibodies directed against the toxin of *Clostridium tetani.* Each serial shall meet the applicable general requirements provided in § 113.450 and paragraph (a) of this section, and be tested for potency as provided in paragraph (b) of this section. Any serial found unsatisfactory by a prescribed test shall not be released.

* * * * *

5. In § 113.452, the section heading, introductory text of the section, and paragraph (a) are revised; paragraph (b) is removed; paragraph (c) is redesignated as new paragraph (b); and newly redesignated paragraph (b) introductory text, paragraphs (b)(1) and (b)(3) are revised to read as follows:

§ 113.452 Erysipelothrix Rhusiopathiae Antibody.

Erysipelothrix Rhusiopathiae Antibody is a specific antibody product containing antibodies directed against one or more somatic antigens of *Erysipelothrix rhusiopathiae.* Each serial shall be tested as provided in this section. Any serial found unsatisfactory by a prescribed test shall not be released.

(a) Each serial shall meet the applicable general requirements provided in § 113.450.

(b) *Potency test.* Bulk or final container samples of completed product from each serial shall be tested using the two-stage test provided in this section.

(1) In the first stage, each of 40 Swiss mice, each weighing 16 to 20 grams, shall be injected subcutaneously with 0.1 ml of product (dried product shall be rehydrated according to label directions). Twenty-four hours postinjection, the injected mice and 10 additional mice designated controls shall be challenged subcutaneously with the same culture of *Erysipelothrix rhusiopathiae.*

* * * * *

(3) The mice injected with product shall be observed for 10 days postchallenge and all deaths recorded.

The second stage shall be required when 7–10 of the mice injected with product die in the first stage. The second stage shall be conducted in a manner identical to the first stage.

* * * * *

§ 113.453 [Removed and Reserved]

6. Section 113.453 is removed and reserved.

7. In § 113.454, the introductory text of the section and paragraph (a) are revised; paragraph (b) is removed; paragraph (c) is redesignated as new paragraph (b); and the introductory text of newly designated paragraph (b) is revised to read as follows:

§ 113.454 Clostridium Perfringens Type C Antitoxin.

Clostridium Perfringens Type C Antitoxin is a specific antibody product containing antibodies directed against the toxin of *Clostridium perfringens* Type C. Each serial shall be tested as provided in this section. Any serial found unsatisfactory by a prescribed test shall not be released.

(a) Each serial shall meet the applicable general requirements provided in § 113.450.

(b) *Potency test.* Bulk or final container samples of completed product from each serial shall be tested using the toxin-neutralization test for Beta Antitoxin provided in this section. Dried products shall be rehydrated according to label directions.

* * * * *

8. In § 113.455, the introductory text of the section and paragraph (a) are revised; paragraph (b) is removed; paragraph (c) is redesignated as new paragraph (b); and the introductory text of newly redesignated paragraph (b) is revised to read as follows:

§ 113.455 Clostridium Perfringens Type D Antitoxin.

Clostridium Perfringens Type D Antitoxin is a specific antibody product containing antibodies directed against the toxin of *Clostridium perfringens* Type D. Each serial shall be tested as provided in this section. Any serial found unsatisfactory by a prescribed test shall not be released.

(a) Each serial shall meet the applicable general requirements provided in § 113.450.

(b) *Potency test.* Bulk or final container samples of completed product from each serial shall be tested using the toxin-neutralization test for Epsilon Antitoxin provided in this section. Dried products shall be rehydrated according to label directions.

* * * * * * *

§§ 113.456 through 113.498 [Added and Reserved]

9. New §§ 113.456 through 113.498 are added and reserved.

10. New § 113.499 is added to read as follows:

§ 113.499 Products for treatment of failure of passive transfer.

A product for the treatment of failure of passive transfer (FPT) shall contain a specified minimum quantity of IgG per dose and shall be recommended for use only in neonates of the same species as that of antibody origin. A product for oral administration shall not be recommended for use in animals more than 24 hours of age, while one for parenteral administration shall only be recommended for use in neonatal animals. Each serial shall meet the applicable general requirements provided in § 113.450 and be tested for potency as provided in this section. Any serial found unsatisfactory by a prescribed test shall not be released.

(a) *Qualification of an IgG Reference Product.* An IgG Reference Product (reference) shall be a serial of product that is manufactured according to the filed Outline of Production, properly qualified, and used to assess the potency of subsequent product serials, as described in paragraph (c) below. The reference shall be qualified as follows:

(1) At least 20 newborn, colostrum-deprived animals of the species for which the product is recommended shall be randomly selected.

(2) Blood samples shall be taken from each animal.

(3) Each animal shall be administered one dose of reference by the recommended route and shall be observed for 24 hours.

(i) Any adverse reactions shall be recorded.

(ii) The dosage of reference administered to each animal shall be in accordance with label directions. Label directions may indicate a single dosage regardless of weight, in which case the animals in the study shall be at or near the maximum weight for neonates of the species.

(4) After 24 hours, blood samples shall be taken from each animal.

(5) Pretreatment and post treatment serum IgG concentrations shall be concurrently determined for each animal using a radial immunodiffusion (RID) method acceptable to APHIS and described in the filed Outline of Production for the product.

(6) Concurrently, using the same method, five IgG measurements shall be made on an IgG Species Standard supplied or approved by APHIS. The IgG Species Standard shall be a preparation that contains IgG specific for the species in question at a concentration acceptable to APHIS.

(7) For an IgG Reference Product to be satisfactory, all animals used to qualify the reference must remain free of unfavorable product-related reactions and at least 90 percent of the paired serum samples must reflect an increase in IgG concentration (posttreatment minus pretreatment concentration) equal to or greater than the IgG concentration of the IgG Species Standard.

(b) *Antibody functionality.* Prior to licensure, the prospective licensee shall perform a neutralization study, or another type of study acceptable to APHIS, to demonstrate functionality of product antibody.

(c) *Potency.* Bulk or final container samples of completed product from each serial shall be tested for IgG content as provided in this paragraph. Samples of the test serial and of an IgG Reference Product established in accordance with paragraph (a) of this section shall be concurrently tested for IgG content by the RID method referred to in paragraph (a)(5) of this section. Five IgG measurements shall be made on each. If the IgG level per dose of the test serial does not meet or exceed that of the reference, one complete retest, involving five IgG measurements on both the reference and two samples of the test serial, may be conducted. If, upon retest, the average IgG level per dose of the two samples of the test serial does not meet or exceed that of the reference, or if a retest is not conducted, the serial is unsatisfactory.

Done in Washington, DC, this 30th day of September 1996.

A. Strating,

Acting Administrator, Animal and Plant Health Inspection Service.

[FR Doc. 96–25501 Filed 10–3–96; 8:45 am]

BILLING CODE 3410–34–P

DEPARTMENT OF THE TREASURY

Office of the Comptroller of the Currency

12 CFR Part 2

[Docket No. 96–22]

RIN 1557–AB49

Sales of Credit Life Insurance

AGENCY: Office of the Comptroller of the Currency, Treasury.

ACTION: Final rule.

SUMMARY: The Office of the Comptroller of the Currency (OCC) is revising its

regulation governing national bank sales of credit life insurance and the disposition of credit life insurance income. This final rule is another component of the OCC's Regulation Review Program to update and streamline OCC regulations, focus regulations on key safety and soundness concerns and agency objectives, and eliminate requirements that impose unnecessary regulatory burdens on national banks. The final rule eliminates unnecessarily detailed provisions, reorganizes the rule into a more helpful format, and refocuses the regulation to better address areas presenting potential safety and soundness and conflict of interest issues.

EFFECTIVE DATE: December 31, 1996.

FOR FURTHER INFORMATION CONTACT: Stuart E. Feldstein, Assistant Director, Legislative and Regulatory Activities, (202) 874–5090; Karen E. McSweeney, Attorney, Legislative and Regulatory Activities, (202) 874–5090. Office of the Comptroller of the Currency, 250 E Street, SW, Washington, DC 20219.

SUPPLEMENTARY INFORMATION:

Background

On September 13, 1995, the OCC published a notice of proposed rulemaking, 60 FR 47498 (September 13, 1995) (proposal), to revise 12 CFR part 2—the OCC's regulation governing credit life insurance and the disposition of credit life insurance income. The proposal reaffirmed the OCC's commitment to addressing the concerns that gave rise to the former part 2 and did not contemplate altering the fundamental standards reflected in the former rule.

As noted in the proposal, there are two principal concerns that part 2 is intended to address. First, part 2 is ''premised on the judgment that income earned from credit life insurance sales to bank customers by bank officers using bank premises and good will in the creation of bank assets (loans) should be credited to bank earnings rather than be paid directly to and retained by officers, directors or selected stockholders.'' *See* 42 FR 48518 (September 23, 1977). Second, a conflict of interest may exist when a loan officer's receipt of commissions for the sale of the credit life insurance is tied to the number of loans he or she makes. This prospect of financial reward based solely upon loan volume may induce loan officers to make unsound loans or unsound insurance recommendations to the bank's customers. [1] *See generally First National Bank of La Marque* v. *Smith,* 610 F.2d 1258 (5th Cir. 1980).

The courts have confirmed the authority of a national bank to sell credit life insurance. *See IBAA* v. *Heimann,* 613 F.2d 1164 (D.C. Cir. 1979), *cert. denied,* 449 U.S. 823 (1980). In *Heimann,* the D.C. Circuit stated that 12 U.S.C. 24 (Seventh) grants national banks all incidental powers necessary to carry on the business of banking and found that the sale of credit life insurance is within the incidental powers of national banks. As the court noted, credit life insurance is both commonplace and essential where ordinary loans on personal security are involved. *Id.* at 1170. The court also found that the then-current part 2 regulations were well within the OCC's rulemaking authority. *Id.* at 1171.

Comments Received and Changes Made

The proposal revised part 2 by streamlining the overly detailed format of the former part 2 and reorganizing the rule into more readable and concise provisions. The OCC received 25 comments on the proposal. The commenters included 17 banks and bank holding companies, four trade associations, two law firms, one public interest organization, and one insurance company.

The commenters generally supported the proposed changes to part 2, and the final rule implements most of the initiatives contained in the proposal, including the revised structure and format. However, many commenters recommended changes to specific sections. The OCC carefully considered each comment and has responded by making certain changes. The section-by-section discussion of this preamble identifies and discusses comments received and any changes made to the proposal. Distribution and derivation tables summarizing sections of former part 2 as changed by the final rule are included at the end of this preamble.

Section-by-Section Discussion

Section 2.1—Authority, Purpose, and Scope

The proposal added an ''Authority, purpose, and scope'' section that briefly described the objectives and scope of the regulation. This section also restated language from former § 2.6 relating to national bank authority to provide credit life insurance under 12 U.S.C. 24 (Seventh).

The OCC received no comments on this section. The final rule adopts the section substantially as proposed.

Section 2.2—Definitions

The proposal defined ''credit life insurance'' to mean ''credit life, health, and accident insurance.'' The OCC requested comment on whether the scope of this definition was appropriate. The OCC received 11 comments on this issue. Most commenters recommended expanding the definition to include, for example, all types of credit-related insurance.

The OCC declines, at this time, to expand the regulatory definition of ''credit life insurance,'' but notes that it has approved, on a case-by-case basis, bank sales of other types of credit-related insurance. The OCC recognizes that national banks are authorized to offer credit-related insurance other than credit life insurance pursuant to 12 U.S.C. 24(Seventh) and will continue to consider these types of credit-related insurance on a case-by-case basis.

A number of commenters also noted that the OCC had removed language from the definition of credit life insurance and questioned whether the OCC intended to change the meaning of the definition. In addition to stating that credit life insurance ''means credit life, health and accident insurance,'' the former rule also noted that this is ''sometimes referred to as credit life and disability insurance, and mortgage life and disability insurance.'' The proposal did not include this latter language. However, the OCC did not intend to change the definition of credit life insurance. Thus, to avoid any confusion, the final rule retains the language contained in the former rule.

In addition, the final rule retains the definition of the term ''bank'' contained in the former rule and makes a technical change by replacing the defined term ''interest'' with ''owning an interest.''

Section 2.3—Distribution of Credit Life Insurance Income

The proposal provided that the means of distributing credit life insurance income must be consistent with certain requirements and principles identified in proposed § 2.3. These requirements included prohibiting a director, officer, employee, or principal shareholder (bank insider), or an entity in which a bank insider has a voting interest of five percent or more, from retaining

[1] Additional safety and soundness concerns cited when the rule was adopted included that: (1) arrangements permitting employees, officers and directors to use bank premises and good will for personal profit were inimical to the trust and confidence depositors place in financial institutions; (2) the acquisition of a bank by investors who rely on the credit life insurance income to service their debt was inherently unsafe and unsound because it decreases their interest in running a profitable bank; and (3) incentives to increase bank profits were diminished if money was distributed other than through dividends. *See* 41 FR 29846 (July 20, 1976); 42 FR 48518 (September 23, 1977).

commissions or other income from the sale of credit life insurance to loan customers of the bank, subject to certain exceptions for bonus and incentive plans. Proposed § 2.3 also provided that it is unsafe and unsound for a bank insider, or an entity in which the insider has a voting interest of five percent or more, to take advantage of that business opportunity for personal profit.

The proposal defined the term ''principal shareholder'' as any shareholder who directly or indirectly owns or controls an interest of more than five percent of the bank's outstanding shares. The OCC asked commenters to address whether the five percent ownership test for a ''principal shareholder'' and for covered entities in which bank insiders have an interest is an appropriate ownership test to use in these contexts, and, if not, what alternative percentages or more flexible standards would be appropriate.

The OCC received seven comments on this issue. Six commenters recommended increasing the ownership test to ten percent. One commenter stated that the definition of principal shareholder is too broad and should not include holding companies.

The final rule increases the ownership test from five percent to ten percent. The ten percent ownership level is used to define a ''principal shareholder'' for purposes of other safety and soundness regulations, and the OCC does not believe safety and soundness concerns require a lower threshold in the context of the part 2 definition. For example, a ''principal shareholder'' for purposes of insider lending standards is defined using a ten percent voting securities ownership test. 12 CFR 215.2(m)(1).

Thus, the final rule defines a ''principal shareholder'' as any shareholder who directly or indirectly owns or controls an interest of more than ten percent of the bank's outstanding voting securities. The final rule also provides that it is an unsafe and unsound practice for any bank director, officer, employee, or principal shareholder, or any entity in which this person owns an interest of more than ten percent, who is involved in the sale of credit life insurance to loan customers of the national bank, to take advantage of that business opportunity for personal profit. In this regard, the final rule states that recommendations to customers to buy credit life insurance should be based on the benefits of the policy, not the commissions to be received from the sale. In addition, except as provided in §§ 2.3(d), 2.4, and 2.5(b), a bank insider, or an entity in which the bank insider owns an interest of more than ten percent, may not retain commissions or other income from the sale of credit life insurance in connection with any loan made by that bank, and income from credit life insurance sales must be credited to the income accounts of the bank.

The OCC also requested comment on situations where banks share space and employees with other non-bank entities. In some instances, the bank and another entity that uses bank premises may share employees to sell products, potentially including credit life insurance, to the bank's customers. To the extent these shared employees received commissions from the sale of the credit life insurance, the arrangement arguably fell within the prohibitions contained in the proposal.

The OCC received one comment on this issue. The commenter recommended that the bank receive the profits from sales of credit life insurance by shared employees.

The OCC agrees that in some cases this is the appropriate result. However, there are situations where the concerns underlying part 2 would not, generally, be implicated. Accordingly, the final rule focuses on the objectives underlying part 2 and does not apply the part 2 restrictions in certain cases to dual employees, provided that specified conditions are met. Thus, under the final rule, a director, officer, employee, or principal shareholder is not subject to the specific limits of part 2 if he or she is: (1) Employed by a third party that has contracted with the bank on an arm's-length basis to sell financial products on bank premises; and (2) not involved in the bank's credit decision process.

The first requirement ensures that the third party will compensate the bank for the use of the bank's premises, thus addressing the concern that the bank be properly reimbursed for the use of its premises and good will. The second requirement addresses potential conflicts of interest that may arise when the individual selling the insurance is involved in the credit decision. The OCC believes that these conditions effectively adapt the part 2 safeguards to the dual employee situation.

The proposal also requested comment on whether to retain a provision that permitted income from the sale of credit life insurance to be credited to a holding company affiliate of the bank or to a trust for the benefit of all shareholders, if the holding company affiliate or trust paid reasonable compensation to the bank for the use of its personnel, premises, and good will. Under the former rule, it was suggested that reasonable compensation meant an amount equivalent to at least 20 percent of the affiliate's net income attributable to the bank's credit life insurance sales.

The OCC received only a few comments addressing this issue. After considering these comments, the OCC has decided to retain the current provision with a few modifications. Thus, under the final rule, income derived from the sale of credit life insurance to loan customers may be credited to an affiliate operating under the Bank Holding Company Act of 1956, 12 U.S.C. 1841 *et seq.*, or to a trust for the benefit of all shareholders, if the holding company affiliate or trust pays reasonable compensation to the bank for the use of the bank's personnel, premises, and good will. The OCC does not believe, however, that it is appropriate for it to suggest what constitutes reasonable compensation in these arrangements. Thus, the final rule states that reasonable compensation *generally* means an amount equivalent to at least 20 percent of the affiliate's net income attributable to the bank's credit life insurance sales. This provision has been transferred a new section 2.5(b).

The proposal also requested comment on whether to apply the prohibition against the retention of income derived from the sale of credit life insurance to sales of credit life insurance to loan customers of an affiliate bank. The OCC received several comments on this issue, which raised issues warranting further study. Therefore, this issue is not addressed in the final rule.

Section 2.4—Bonus and Incentive Plans

Both the proposal and the former regulation permitted limited bonus and incentive arrangements for employees and officers notwithstanding the general prohibition against paying insiders income derived from the sale of credit life insurance. Bonuses and incentive payments based on credit life insurance sales in any one year are limited to the greater of five percent of the recipient's annual salary or five percent of the average salary of all loan officers participating in the plan. The bank may not pay bonuses more frequently than quarterly.

The OCC requested comment relating to both the frequency and amount of the bonus and incentive payments. Specifically, the OCC asked commenters to address whether the periodic payment standard and the percentage limits are appropriate safeguards for bonus and incentive programs, and, if not, what alternative safeguards would deter inappropriate sales activities by insiders in connection with the sale of credit life insurance.

The OCC received 22 comments addressing the permissible *amount* of

bonus and incentive plan payments. Nineteen commenters supported either eliminating or increasing the five percent limit on the amount that a bank may pay its employees under an incentive or bonus plan. Commenters recommended alternatives including: (1) Permitting any compensation plan approved by the bank's board of directors; (2) permitting up to five percent of premiums sold; and (3) expanding the percentage from five percent to up to ten percent. Other commenters suggested that the sole limitation should be the requirement contained in the proposal that the bank not structure its sales practices in a manner that could create incentives for persons selling credit life insurance to make inappropriate recommendations.

Those supporting the retention of the current standards asserted that the five percent standard is reasonable and provides sufficient safeguards against abuses. One commenter stated that the five percent limit provides a necessary bright-line test to prevent banks from coercing customers.

The OCC agrees with the reasons offered by the commenters for retaining the five percent limit on bonus and incentive plan payments based on credit life insurance sales. The OCC shares the concerns expressed that the prospect of increased financial reward could create an inappropriate incentive for salespersons to make financially unsound loans or to recommend insurance based on the amount of commissions paid rather than the benefits of the policy itself, thereby undermining the purpose of the regulation. Thus, the final rule retains the five percent limit on the amount of permissible bonus and incentive plan payments based on credit life insurance sales.

The OCC also received 18 comments addressing the *frequency* of permissible bonus payments. Several commenters suggested either eliminating or changing to monthly the quarterly limitation on the frequency with which a bank could make bonus payments.

The OCC is not aware that the frequency—as opposed to the amount—of the bonus payments has any demonstrable relationship to the potential for coercing customers to purchase credit life insurance. Moreover, removing this requirement could reduce burden and increase flexibility for national banks that have separate payment procedures for employees selling credit life insurance. Therefore, the final rule removes the limitation on the frequency of bonus payments.

The proposal also added a new provision requiring the bank to avoid structuring its bonus or incentive plan in a manner that could create incentives for persons selling credit life insurance to make inappropriate recommendations or sales of credit life insurance to bank customers. The OCC received four comments on this provision. Several commenters expressed concern that the provision was too vague and could thereby encourage litigation against banks by disaffected purchasers of credit life insurance.

The OCC agrees that the proposed provision was potentially vague. However, the OCC believes that the issue nevertheless needs to be addressed. As noted in the discussion of § 2.3, the OCC believes that encouraging a customer to buy credit life insurance on the basis of commissions to the seller rather than the benefits of the policy is an example of taking inappropriate advantage of a business opportunity for personal profit. This is a concern regardless of the percentage limitations that apply to bank insiders' and principal shareholders' receipt of incentive and bonus payments and, accordingly, is specifically referenced in § 2.3 of the final rule.

Section 2.5—Bank Compensation

The OCC has made one clarifying structural change to the final rule. The final rule transfers to a new § 2.5(a) a concept from the former rule and the proposal relating to the permissibility of a bank insider compensating the bank for the use of bank premises, employees, or good will. Also, as noted earlier, § 2.5(b) contains a provision from the former rule which allows income derived from credit life insurance sales to loan customers to be credited to a holding company affiliate or a trust for the benefit of all shareholders, provided that the bank receives reasonable compensation in recognition for the role played by its personnel, premises, and good will in the sale of the credit life insurance. Reasonable compensation generally means an amount equivalent to at least 20 percent of the affiliate's net income attributable to the bank's credit life insurance sales.

Other Changes

The proposal also made a number of additional changes to the regulation. For example, the proposal removed former § 2.5 which relates to director responsibilities because that issue was addressed in a different section of the regulation. The proposal also removed language in former § 2.6 that contained a list of OCC approved methods of distributing credit life insurance income that identified alternatives to the assignment of commissions to the bank. The proposal substituted a simple statement that the means of distribution of credit life insurance income must be consistent with the requirements and principles of § 2.3. The final rule adopts, substantially as proposed, these changes.

The proposal also removed former § 2.7, which reserved the Comptroller's authority to modify the applicability of part 2 based on the particular circumstances of the bank. The final rule removes this provision. However, as stated in the proposal, the OCC will continue to consider requests for waivers of part 2 on a case-by-case basis.

Distribution Table

The distribution table indicates where, if applicable, each section of the former part 2 will appear in the final part 2.

Original provision	Revised provision	Comment
§ 2.1	§ 2.1(a)	Modified.
§ 2.2(a)	§ 2.1(c)	Modified.
§ 2.2(b)	§ 2.1(b)	Modified.
§ 2.3	§ 2.2	Modified.
§ 2.4(a)	§§ 2.3, 2.4	Modified.
§ 2.4(b)	§§ 2.3(c), 2.5(b).	Modified.
§ 2.4(c)	§ 2.5(a)	Modified.
§ 2.5	§ 2.3(b)	Modified.
§ 2.6		Removed.
§ 2.7		Removed.

Derivation Table

This derivation table illustrates the former sections of part 2 upon which the final sections are based.

Revised provision	Original provision	Comment
§ 2.1(a)	§ 2.1	Modified.
§ 2.1(b)	§ 2.2(b)	Modified.
§ 2.1(c)	§ 2.2(a)	Modified.
§ 2.2	§ 2.3	Modified.
§§ 2.3(a), (b), and (c).	§§ 2.4(a), (b)	Modified.
§ 2.3(d)		Added.
§ 2.4	§ 2.4(a)	Modified.
§ 2.5(a)	§ 2.4(c)	Modified.
§ 2.5(b)	§ 2.4(b)	Modified.

Regulatory Flexibility Act

Pursuant to section 605(b) of the Regulatory Flexibility Act, 5 U.S.C. section 605(b), the Comptroller of the Currency certifies that this rule will not have a significant economic impact on a substantial number of small entities. This final rule eliminates unnecessary or confusing language and restructures part 2 to clarify regulatory requirements. This final rule reduces, somewhat, regulatory burden on national banks,

regardless of size. This final rule has minimal impact. Accordingly, a regulatory flexibility analysis is not required.

Executive Order 12866

The OCC has determined that this final rule is not a significant regulatory action under Executive Order 12866.

Unfunded Mandates Reform Act of 1995

Section 202 of the Unfunded Mandates Reform Act of 1995 (Unfunded Mandates Act), 2 U.S.C. 1532, requires that an agency prepare a budgetary impact statement before promulgating a rule that includes a Federal mandate that may result in the expenditure by state, local, and tribal governments, in the aggregate, or by the private sector, of $100 million or more in any one year. If a budgetary impact statement is required, section 205 of the Unfunded Mandates Act, 2 U.S.C. 1535, also requires an agency to identify and consider a reasonable number of regulatory alternatives before promulgating a rule. Because the OCC has determined that this final rule will not result in expenditures by state, local, and tribal governments, or by the private sector, of more than $100 million in any one year, the OCC has not prepared a budgetary impact statement or specifically addressed the regulatory alternatives considered. As discussed in the preamble, the final rule has the effect of reducing burden and increasing the flexibility of national banks, consistent with safe and sound banking practices.

List of Subjects in 12 CFR Part 2

Credit, Life insurance, National banks.

Authority and Issuance

For the reasons set out in the preamble, part 2 of chapter I of title 12 of the Code of Federal Regulations is revised to read as follows:

PART 2—SALES OF CREDIT LIFE INSURANCE

Sec.
2.1 Authority, purpose, and scope.
2.2 Definitions.
2.3 Distribution of credit life insurance income.
2.4 Bonus and incentive plans.
2.5 Bank compensation.

Authority: 12 U.S.C. 24 (Seventh), 93a, and 1818(n).

§ 2.1 Authority, purpose, and scope.

(a) *Authority.* A national bank may provide credit life insurance to loan customers pursuant to 12 U.S.C. 24 (Seventh).

(b) *Purpose.* The purpose of this part is to set forth the principles and standards that apply to a national bank's provision of credit life insurance and the limitations that apply to the receipt of income from those sales by certain individuals and entities associated with the bank.

(c) *Scope.* This part applies to the provision of credit life insurance by any national bank employee, officer, director, or principal shareholder, and certain entities in which such persons own an interest of more than ten percent.

§ 2.2 Definitions.

(a) *Bank* means a national banking association or a bank located in the District of Columbia and subject to the supervision of the Comptroller of the Currency.

(b) *Credit life insurance* means credit life, health, and accident insurance, sometimes referred to as credit life and disability insurance, and mortgage life and disability insurance.

(c) *Owning an interest* includes:

(1) Ownership through a spouse or minor child;

(2) Ownership through a broker, nominee, or other agent; or

(3) Ownership through any corporation, partnership, association, joint venture, or proprietorship, that is controlled by the director, officer, employee, or principal shareholder of the bank.

(d) *Officer, director, employee, or principal shareholder* includes the spouse and minor children of an officer, director, employee, or principal shareholder.

(e) *Principal shareholder* means any shareholder who directly or indirectly owns or controls an interest of more than ten percent of the bank's outstanding voting securities.

§ 2.3 Distribution of credit life insurance income.

(a) Distribution of credit life insurance income by a national bank must be consistent with the requirements and principles of this section.

(b) It is an unsafe and unsound practice for any director, officer, employee, or principal shareholder of a national bank (including any entity in which this person owns an interest of more than ten percent), who is involved in the sale of credit life insurance to loan customers of the national bank, to take advantage of that business opportunity for personal profit. Recommendations to customers to buy insurance should be based on the benefits of the policy, not the commissions received from the sale.

(c) Except as provided in §§ 2.4 and 2.5(b), and paragraph (d) of this section, a director, officer, employee, or principal shareholder of a national bank, or an entity in which such person owns an interest of more than ten percent, may not retain commissions or other income from the sale of credit life insurance in connection with any loan made by that bank, and income from credit life insurance sales to loan customers must be credited to the income accounts of the bank.

(d) The requirements of paragraph (c) of this section do not apply to a director, officer, employee, or principal shareholder if:

(1) The person is employed by a third party that has contracted with the bank on an arm's-length basis to sell financial products on bank premises; and

(2) The person is not involved in the bank's credit decision process.

§ 2.4 Bonus and incentive plans.

A bank employee or officer may participate in a bonus or incentive plan based on the sale of credit life insurance if payments to the employee or officer in any one year do not exceed the greater of:

(a) Five percent of the recipient's annual salary; or

(b) Five percent of the average salary of all loan officers participating in the plan.

§ 2.5 Bank compensation.

(a) Nothing contained in this part prohibits a bank employee, officer, director, or principal shareholder who holds an insurance agent's license from agreeing to compensate the bank for the use of its premises, employees, or good will. However, the employee, officer, director, or principal shareholder shall turn over to the bank as compensation all income received from the sale of the credit life insurance to the bank's loan customers.

(b) Income derived from credit life insurance sales to loan customers may be credited to an affiliate operating under the Bank Holding Company Act of 1956, 12 U.S.C. 1841 *et seq.*, or to a trust for the benefit of all shareholders, provided that the bank receives reasonable compensation in recognition of the role played by its personnel, premises, and good will in credit life insurance sales. Reasonable compensation generally means an amount equivalent to at least 20 percent of the affiliate's net income attributable to the bank's credit life insurance sales.

Dated: August 30, 1996.

Eugene A. Ludwig,

Comptroller of the Currency.

[FR Doc. 96–25158 Filed 10–3–96; 8:45 am]

BILLING CODE 4810–33–P

DEPARTMENT OF TRANSPORTATION

Federal Aviation Administration

14 CFR Part 91

[Docket No. 28690; Special Federal Aviation Regulation (SFAR) No. 76]

RIN 2120–AG–28

Removal of the Prohibition Against Certain Flights Within the Territory and Airspace of Iran

AGENCY: Federal Aviation Administration (FAA), DOT.

ACTION: Final rule; removal.

SUMMARY: This action removes Special Federal Aviation Regulation (SFAR) No. 76, which prohibits flight operations within the territory and airspace of Iran by any United States air carrier or commercial operator, by any person exercising the privileges of an airman certificate issued by the FAA except persons operating U.S.-registered aircraft for foreign air carriers, or by an operator using an aircraft registered in the United States unless the operator of such aircraft is a foreign air carrier. This action is taken in response to the decrease in certain military operations in northwest Iran, including the removal of equipment from a missile site near the Iran-Turkey border, which has reduced the threat of hostile actions against persons and aircraft engaged in flight operations within Iran's territory and airspace.

DATES: Effective Date: September 27, 1996.

FOR FURTHER INFORMATION CONTACT: Mark W. Bury, International Affairs and Legal Policy Staff, AGC–7, Office of the Chief Counsel, Federal Aviation Administration, 800 Independence Avenue, SW., Washington, D.C. 20591. Telephone: (202) 267–3515. Any person may obtain a copy of this document by submitting a request to the Federal Aviation Administration, Office of Rulemaking, Attention: ARM–1, 800 Independence Avenue, SW., Washington, D.C. 20591, or by calling (202) 267–9677. Communications must identify the number of this SFAR. Persons interested in being placed on a mailing list for future rules should also request a copy of Advisory Circular No. 11–2A, which describes the application procedure.

SUPPLEMENTARY INFORMATION: On September 17, 1996, the FAA issued a final rule prohibiting certain aircraft operations within the territory and airspace of Iran. In the exercise of its statutory responsibility for the safety of U.S.-registered aircraft and U.S. operators, the FAA determined that an I–HAWK surface-to-air missile site established by Iran in close proximity to civilian air corridors near the Iran-Turkey border posed a threat to civil aviation, and therefore justified the imposition of certain measures to ensure the safety of U.S.-registered aircraft and operators conducting flight operations within Iran's territory and airspace. SFAR 76 prohibits flight operations within the territory and airspace of Iran by any United States air carrier or commercial operator, by any person exercising the privileges of an airman certificate issued by the FAA except persons operating U.S.-registered aircraft for foreign air carriers, or by an operator using an aircraft registered in the United States unless the operator of such aircraft is a foreign air carrier.

The FAA has determined that the threat to civil aviation posed by the I–HAWK surface-to-air missile site and related military operations has ended. The I–HAWK missile equipment has been removed and the related military operations terminated. There now appears to be no continuing threat to civil aviation arising out of, or related to, Iranian military operations in that area.

On the basis of the foregoing information, I have determined that the immediate removal of SFAR 76 from 14 CFR Part 91 is appropriate. The Department of State has been advised of, and has no objection to, the action taken herein.

List of Subjects in 14 CFR Part 91

Air traffic control, Aircraft, Airmen, Airports, Aviation safety, Freight, Iran.

The Amendment

For the reasons set forth above, the Federal Aviation Administration amends 14 CFR Part 91 by removing SFAR 76 as follows:

PART 91—GENERAL OPERATING AND FLIGHT RULES

1. The authority citation for part 91 continues to read as follows:

Authority: 49 U.S.C. 106(g), 40103, 40113, 40120, 44101, 44111, 44701, 44709, 44711, 44712, 44715, 44716, 44717, 44722, 46306, 46315, 46316, 46502, 46504, 46506–46507, 47122, 47508, 47528–47531.

2. Special Federal Aviation Regulation No. 76 is removed.

Issued in Washington, DC, on September 27, 1996.

David R. Hinson,

Administrator.

[FR Doc. 96–25421 Filed 9–30–96; 3:15 pm]

BILLING CODE 4910–13–M

DEPARTMENT OF HOUSING AND URBAN DEVELOPMENT

24 CFR Part 3500

[Docket No. FR–3638–N–07]

RIN 2502–AG26

Office of the Assistant Secretary for Housing—Federal Housing Commissioner; Amendments to Regulation X, the Real Estate Settlement Procedures Act: Withdrawal of Employer-Employee and Computer Loan Origination Systems (CLOs) Exemptions; Notice of Delay of Effectiveness of Rule

AGENCY: Office of the Assistant Secretary for Housing—Federal Housing Commissioner, HUD.

ACTION: Final rule; Notice of delay of effectiveness.

SUMMARY: Due to recent legislation, this document delays until further notice the effectiveness of a final rule revising Regulation X, which implements the Real Estate Settlement Procedures Act of 1974 (RESPA). This final rule was published on June 7, 1996 (61 FR 29238), and it was corrected and revised on August 12, 1996 (61 FR 41944). Within 30 days of the publication of this notice, the Department will provide further notice indicating its time schedule for making effective the various provisions of these rules.

DATES: The effective date of the final rule amending part 3500 published June 7, 1996 (61 FR 29238) and corrected August 12, 1996 (61 FR 41944), is delayed until further notice. See Supplementary Information.

FOR FURTHER INFORMATION CONTACT: David Williamson, Director, Office of Consumer and Regulatory Affairs, Room 5241, telephone (202) 708–4560; or, for legal questions, Kenneth A. Markison, Assistant General Counsel for GSE/RESPA, Grant E. Mitchell, Senior Attorney for RESPA, or Richard S. Bennett, Attorney, Office of General Counsel, Room 9262, telephone (202) 708–1550. (The telephone numbers are not toll-free.) For hearing- and speech-impaired persons, these numbers may be accused via TTY (text telephone) by calling the Federal Information Relay Service at 1–800–877–8339. The address for the above-listed persons is:

Department of Housing and Urban Development, 451 Seventh Street, SW, Washington, DC 20410.

SUPPLEMENTARY INFORMATION: In the rule published on June 7, 1996 (61 FR 29238) entitled ''Amendments to Regulation X, the Real Estate Settlement Procedures Act: Withdrawal of Employer-Employee and Computer Loan Origination Systems (CLOs) Exemptions,'' the Department established an effective date of 120 days from publication: October 7, 1996. Subsequently, on August 12, 1996 (61 FR 41944), the Department revised a document associated with that rules—Appendix D, the Controlled Business Arrangement (CBA) Disclosure Statement Format—in order to make it clearer how the format is to be completed.

On September 30, 1996, as part of an Omnibus Consolidated Appropriations Act (section 2103 of the Departments of Commerce, Justice, and State, the Judiciary, and Related Agencies Appropriations Act, 1997 (Cong. Rec. H11,750–51 (daily ed. September 28, 1996))), the President signed legislation which delays the effectiveness of the amendment to Regulation X contained in the Department's June 7, 1996 final RESPA rule relating to payments to employees. Specifically, the Omnibus Consolidated Appropriations Act provides that the effectiveness of the amendment contained in the June 7, 1996 rule which would have eliminated the provision of the Department's rule providing that section 8 of RESPA permits ''An employer's payment to its own employees for any referral activities'' (24 CFR 3500.14(g)(1)(vii)), is delayed. The Act also provides that the effectiveness of the following additional provisions is delayed: (1) the exemption for employer payments to managerial employees (§ 3500.14(g)(1)(viii) of the June 7 rule); (2) the exemption for employer payments to employees who do not perform settlement services in any transaction (§ 3500.14(g)(1)(ix) of the June 7 rule); and (3) the provision clarifying that ''A payment by an employer to its own *bona fide* employee for generating business for that employer'' is permissible (§ 3500.14(g)(1)(vii) of the June 7 rule).

Although not required by the legislation, the Department has determined to delay temporarily the effectiveness of the June 7 rule, as corrected and revised on August 12, in its entirety, and to continue the prior rule, as in effect on May 1, 1996 and as corrected on September 3, 1996 (61 FR 46510). This will provide the Department with an opportunity to analyze the legislation and develop an appropriate time schedule for making effective the various provisions of these rules. Within 30 days of publication of this notice, the Department will publish further information indicating this time schedule.

Affected persons are advised to comply with the guidance contained in the three Statements of Policy published simultaneously with the June 7, 1996 rule (61 FR 29255–29266), except to the extent that the guidance in them interprets rule provisions that are delayed from becoming effective. To ease any compliance burden on industry, the Department's position is that, until further notice, persons are free to use the revised CBA disclosure statement format published on August 12, 1996, if they so choose, or they may continue to use the format which was in effect on May 1, 1996.

Dated: October 2, 1996.

Stephanie A. Smith,

General Deputy.

[FR Doc. 96–25637 Filed 10–3–96; 8:45 am]

BILLING CODE 4210–27–M

DEPARTMENT OF EDUCATION

34 CFR Parts 614, 617, 619, and 641

Removal of Regulations

AGENCY: Department of Education.

ACTION: Final regulations.

SUMMARY: The Secretary amends the Code of Federal Regulations (CFR) to remove unnecessary regulations. The regulations removed are 34 CFR parts 614 (College Facilities Loan Program), 617 (Financial Assistance for Construction, Reconstruction, or Renovation of Higher Education Facilities), 619 (Grants for Construction, Reconstruction, and Renovation of Graduate Academic Facilities), and 641 (Faculty Development Fellowship Program). As a result of absence of funding and review in accordance with the President's regulatory reinvention initiative, the Secretary has determined that these regulations are no longer needed. However, the removal of these regulations does not alter the obligations of current recipients of federal funds. The regulations in effect when a grant or other agreement is made govern that grant or agreement, unless otherwise specifically provided.

EFFECTIVE DATE: Parts 614, 617, 619, and 641 are removed effective October 4, 1996.

FOR FURTHER INFORMATION CONTACT: Kenneth C. Depew, U.S. Department of Education, Room 5112, FB–10, 600 Independence Avenue, SW, Washington, DC 20202–2241. Telephone: (202) 401–8300. Individuals who use a telecommunications device for the deaf (TDD) may call the Federal Information Relay Service (FIRS) at 1–800–877–8339 between 8 a.m. and 8 p.m., Eastern time, Monday through Friday.

SUPPLEMENTARY INFORMATION: President Clinton's memorandum of March 4, 1995, titled ''Regulatory Reinvention Initiative,'' directed heads of departments and agencies to review all existing regulations to eliminate those that are outdated and modify others to increase flexibility and reduce burden. The Department has undertaken a thorough review of its existing regulations and has identified the regulations removed by this document as unnecessary. Additional obsolete and unnecessary regulations were previously removed on May 23, 1995 (60 FR 27223); April 29, 1996 (61 FR 18680); and June 25, 1996 (61 FR 32656) as part of the Regulatory Reinvention Initiative.

The regulations being removed are no longer necessary because they were issued to implement programs that are no longer funded. The Department is continuing to review its other existing regulations thoroughly in consultation with its customers and partners. To the extent the Secretary can identify further opportunities for regulatory reinvention, the Secretary will propose appropriate amendments to revise or eliminate outdated provisions, reduce burden, and increase flexibility.

Waiver of Proposed Rulemaking

In accordance with the Administrative Procedure Act (5 U.S.C. 553), it is the practice of the Secretary to offer interested parties the opportunity to comment on proposed regulations. However, this document merely removes obsolete regulations from the Code of Federal Regulations. Removal of the regulations does not establish or affect substantive policy. Therefore, the Secretary has determined, pursuant to 5 U.S.C. 553(b)(B), that public comment is unnecessary and contrary to the public interest. For the same reasons the Secretary waives the 30-day delayed effective date in 5 U.S.C. 553(d).

Paperwork Reduction Act of 1995

These regulations have been examined under the Paperwork Reduction Act of 1980 and have been found to contain no information collection requirements.

Assessment of Educational Impact

Based on its own review, the Department has determined that the regulations in this document do not require transmission of information that is being gathered by or is available from any other agency or authority of the United States.

List of Subjects

34 CFR Part 614

Colleges and universities, Grant programs—education.

34 CFR Part 617

Colleges and universities, Grant programs—education.

34 CFR Part 619

Colleges and universities, Grant programs—education.

34 CFR Part 641

Colleges and universities, Grant programs—education, Scholarships and fellowships, Teachers.

Dated: September 30, 1996.

David A. Longanecker,

Assistant Secretary for Postsecondary Education.

(Catalog of Federal Domestic Assistance numbers do not apply.)

PARTS 614, 617, 619, AND 641—[REMOVED]

For reasons stated in the preamble, under the authority at 20 U.S.C. 1221e–3, the Secretary amends Title 34 of the Code of Federal Regulations by removing Parts 614, 617, 619, and 641.

[FR Doc. 96–25439 Filed 10–3–96; 8:45 am]

BILLING CODE 4000–01–P

ENVIRONMENTAL PROTECTION AGENCY

40 CFR Part 52

[CO48–1–7008a & CO–001–0005a; FRL–5607–6]

Clean Air Act Approval and Promulgation of PM_{10} State Implementation Plan for Colorado; Telluride; Revisions to the Maintenance Demonstration

AGENCY: Environmental Protection Agency (EPA).

ACTION: Direct final rule.

SUMMARY: EPA approves the State implementation plan (SIP) revisions for Telluride as submitted by the Colorado Governor with a letter dated April 22, 1996. The April 22, 1996 submittal now satisfies the State's April 21, 1994 commitment to adopt additional control measures in Telluride as necessary to demonstrate maintenance of the National Ambient Air Quality Standards (NAAQS) through December 31, 1997, for particulate matter with an aerodynamic diameter less than or equal to a nominal 10 micrometers (PM_{10}). Based on that commitment, EPA conditionally approved the quantitative milestones element of the Telluride PM_{10} SIP on September 19, 1994. The April 22, 1996 submittal incorporates new street sanding requirements and demonstrates maintenance of the standard through 1997. EPA approves these revisions, and therefore, converts its September 19, 1994 conditional approval to a full approval.

DATES: This final rule will become effective on December 3, 1996 unless adverse comments are received by November 4, 1996. If the effective date is delayed, timely notice will be published in the Federal Register.

ADDRESSES: Copies of the State's submittal and other information are available for inspection during normal business hours at the following locations: Air Program, Environmental Protection Agency, Region VIII, 999 18th Street, suite 500, Denver, Colorado 80202–2405; Colorado Department of Health, Air Pollution Control Division, 4300 Cherry Creek Drive South, Denver, Colorado 80222–1530; and The Air and Radiation Docket and Information Center, 401 M Street, SW, Washington, DC 20460.

FOR FURTHER INFORMATION CONTACT: Amy Platt, 8P2–A, Environmental Protection Agency, Region VIII, (303) 312–6449.

SUPPLEMENTARY INFORMATION:

I. Background

The Telluride, Colorado area was designated nonattainment for PM_{10} and classified as moderate under sections 107(d)(4)(B) and 188(a) of the Clean Air Act, upon enactment of the Clean Air Act Amendments of 1990.[1] See 56 FR 56694 (Nov. 6, 1991), 40 CFR 81.306 (Telluride). The air quality planning requirements for moderate PM10 nonattainment areas are set out in subparts 1 and 4 of part D, title I of the Act.[2]

EPA has issued a ''General Preamble'' describing EPA's preliminary views on how EPA intends to review SIPs and SIP revisions submitted under title I of the Act, including those State submittals containing moderate PM_{10} nonattainment area SIP requirements (see generally 57 FR 13498, April 16, 1992 and 57 FR 18070, April 28, 1992). Because EPA is describing its interpretations here only in broad terms, the reader should refer to the General Preamble for a more detailed discussion of the interpretations of title I advanced in this proposal and the supporting rationale.

Those States containing initial moderate PM_{10} nonattainment areas (those areas designated under section 107(d)(4)(B) of the Act) were required to submit, among other things, the following provisions by November 15, 1991:

1. Provisions to assure that reasonably available control measures (RACM) [including such reductions in emissions from existing sources in the area as may be obtained through the adoption, at a minimum, of reasonably available control technology (RACT)] shall be implemented no later than December 10, 1993;

2. Either a demonstration (including air quality modelling) that the plan will provide for attainment as expeditiously as practicable but no later than December 31, 1994, or a demonstration that attainment by that date is impracticable;

3. Quantitative milestones which are to be achieved every three years and which demonstrate reasonable further progress (RFP) toward attainment by December 31, 1994; and

4. Provisions to assure that the control requirements applicable to major stationary sources of PM_{10} also apply to major stationary sources of PM_{10} precursors except where the Administrator determines that such sources do not contribute significantly to PM10 levels which exceed the NAAQS in the area. See sections 172(c), 188, and 189 of the Act.

On September 19, 1994, EPA partially approved a March 1993 Telluride PM_{10} SIP submittal, including control measures, technical analyses, and other Clean Air Act SIP requirements, with the exception of the quantitative milestone element (see 59 FR 47807). EPA conditionally approved the quantitative milestones element because the SIP did not demonstrate maintenance of the PM_{10} NAAQS

[1] The 1990 Amendments to the Clean Air Act made significant changes to the Act. See Public Law No. 101–549, 104 Stat. 2399. References herein are to the Clean Air Act, as amended (''the Act''). The Clean Air Act is codified, as amended, in the U.S. Code at 42 U.S.C. 7401, *et seq.*

[2] Subpart 1 contains provisions applicable to nonattainment areas generally and Subpart 4 contains provisions specifically applicable to PM_{10} nonattainment areas. At times, Subpart 1 and Subpart 4 overlap or conflict. EPA has attempted to clarify the relationship among these provisions in the ''General Preamble'' and, as appropriate, in today's notice and supporting information.

through 1997, and therefore, it was deficient in meeting the second quantitative milestone (November 15, 1994 through November 15, 1997).

II. This Action

Section 110(k) of the Act sets out provisions governing EPA's review of SIP submittals (see 57 FR 13565–13566). The Governor of Colorado submitted revisions to the SIP for Telluride with a letter dated March 13, 1995. The revisions addressed additional control measures necessary to demonstrate maintenance of the PM_{10} NAAQS.

The March 13, 1995 submittal inadvertently incorporated an incorrect version of a street sanding regulation, *i.e.*, a version differing from what the State actually adopted. Therefore, the State was required, through its administrative procedures, to re-notice, re-hear, and re-adopt the Telluride SIP in order to correct its error. The result is the April 22, 1996 submittal, which completely replaces the March 13, 1995 submittal. Therefore, this action will be specific to the April 22, 1996 submittal.

A. Analysis of State Submission

1. Procedural Background

The Act requires States to observe certain procedural requirements in developing implementation plans and plan revisions for submission to EPA. Section 110(a)(2) of the Act provides that each implementation plan submitted by a State must be adopted after reasonable notice and public hearing.[3] Section 110(l) of the Act similarly provides that each revision to an implementation plan submitted by a State under the Act must be adopted by such State after reasonable notice and public hearing.

EPA also must determine whether a submittal is complete and therefore warrants further EPA review and action [see Section 110(k)(1) and 57 FR 13565]. The EPA's completeness criteria for SIP submittals are set out at 40 CFR part 51, appendix V. The EPA attempts to make completeness determinations within 60 days of receiving a submission. However, a submittal is deemed complete by operation of law if a completeness determination is not made by EPA within six months after receipt of the submission.

To entertain public comment, the State of Colorado, after providing adequate notice, held a public hearing on August 17, 1995 to address the Telluride PM_{10} SIP revision. Following the Colorado Air Quality Control Commission (AQCC) public hearing, the AQCC adopted the Telluride PM_{10} SIP revisions. The Governor of Colorado submitted the Telluride SIP revisions to EPA with a letter dated April 22, 1996.

The SIP revisions were reviewed by EPA to determine completeness in accordance with the completeness criteria set out at 40 CFR part 51, appendix V. The submittal was found to be complete and a letter dated July 12, 1996 was forwarded to the Governor indicating the completeness of the submittal and the next steps in the review process.

2. Control Strategy

EPA approved the control measures in the Telluride moderate PM_{10} nonattainment area SIP as satisfying the RACM (including RACT) requirement on September 19, 1994 (59 FR 47807). The measures targeted wood and coal burning. Please see that notice of final rulemaking and associated Technical Support Document (TSD) for further details on the specific control measures approved in the SIP.

The April 22, 1996 submittal included the addition of a new emission control measure which outlines street sanding requirements. In the Colorado Air Quality Control Commission State Implementation Plan-Specific Regulation for Nonattainment Areas, adopted August 17, 1995 and effective October 30, 1995, section II.C. details street sanding requirements for the Telluride area. Specifications for street sanding include a 2% fines standard for all street sanding materials and requirements for testing and reporting. In the following table, the street sanding controls and associated emissions reductions are outlined.

Source	Control measure	PM_{10} emissions reduction from base year	Effective date
Re-entrained road dust.	Colorado Air Quality Control Commission State Implementation Plan-Specific Regulation for Nonattainment Areas, Section II.C., Telluride Nonattainment Area Street Sanding Requirements.	.....	10/30/95
	Requires that all street sanding materials equal or exceed a standard of less than 2% fines.	32% or 6550 pounds fewer PM_{10} emissions/day in 1997.	

A more detailed discussion of the street sanding control measures can be found in the TSD. EPA has reviewed the State's documentation and concluded that it adequately justifies the emissions reduction credit used in the State's maintenance demonstration. The implementation of these measures, along with the control measures that were approved in the moderate PM_{10} nonattainment area SIP for Telluride on September 19, 1994 (59 FR 47807), will result in continued maintenance of the PM_{10} NAAQS through December 31, 1997. EPA approves this regulation for street sanding requirements as part of the control strategy for the Telluride PM_{10} SIP as it is necessary for continued maintenance of the PM_{10} NAAQS.

3. Emissions Budget

The emissions inventory for the Telluride PM_{10} nonattainment area was approved by EPA in the September 19, 1994 Federal Register (59 FR 47807). The April 22, 1996 submittal included a paragraph to clearly denote the emissions budgets for the Telluride nonattainment area, which are to be used for Federal conformity purposes. The emissions budgets are determined by subtracting the mobile-source related emission reduction credits from the 1994 and 1997 mobile source emissions inventories. Since the State does not have mobile-source related emission reduction credits to be applied to the 1994 mobile source emission inventory, the 1994 emissions budget is the same as the 1994 mobile source emissions inventory and remains unchanged from EPA's September 19, 1994 approval at 16,901 lbs. of PM_{10}/day. However, with the addition of the street sanding measure described above and being approved by EPA today, the 1997 budget is now established at 14,687 lbs. of PM_{10}/day.

[3] Also section 172(c)(7) of the Act requires that plan provisions for nonattainment areas meet the applicable provisions of section 110(a)(2).

4. Revision to the Maintenance Demonstration (Including Air Quality Modelling)

As noted, the initial moderate PM_{10} nonattainment areas were required to submit a demonstration (including air quality modelling) showing that the plan will provide for attainment as expeditiously as practicable (see section 189(a)(1)(B) of the Act). The 24-hour PM_{10} NAAQS is 150 micrograms/cubic meter (μg/m³), and the standard is attained when the expected number of days per calendar year with a 24-hour average concentration above 150 μg/m³ is equal to or less than one (see 40 CFR 50.6). The annual PM_{10} NAAQS is 50 μg/m³, and the standard is attained when the expected annual arithmetic mean concentration is less than or equal to 50 μg/m³ (id.).

EPA approved Colorado's March 17, 1993 attainment demonstration for the Telluride moderate PM_{10} nonattainment area on September 19, 1994 (59 FR 47807–47813). The 24-hour attainment value (*i.e.*, the ambient PM_{10} air quality levels achieved by December 31, 1994) was 142.7 μg/m³. For a more detailed description of that attainment demonstration and the related control strategies, see EPA's September 19, 1994 final rulemaking (59 FR 47807) and the associated TSD.

However, the March 1993 Telluride nonattainment area plan did not show maintenance of the NAAQS through 1997. The 1997 24-hour PM_{10} concentration was predicted to be 180.1 μg/m³, which is above the 24-hour NAAQS of 150 μg/m³. In the April 22, 1996 submittal, the maintenance demonstration was revised to include the emissions reduction credit for the additional control measure involving street sanding requirements.

With the revisions, the 24-hour maintenance value is 135.0 μg/m³ (45.1 μg/m³ lower than without the revision and below the PM_{10} NAAQS). The revised demonstration shows that the control strategies (approved on September 19, 1994 at 59 FR 47807), along with the new street sanding requirements, are adequate to ensure continued maintenance of the 24-hour PM_{10} NAAQS in Telluride through the maintenance year of 1997.

The SIP now adequately demonstrates continued maintenance of the PM_{10} NAAQS in Telluride. For a more detailed description of the maintenance demonstration revisions, please see the TSD for this document.

5. Technical Analyses

With the April 22, 1996 submittal, the Governor submitted the emissions inventory and chemical mass balance analyses that EPA had previously approved in its September 19, 1994 rulemaking action (59 FR 47807). Because EPA previously approved the Telluride emissions inventory and chemical mass balance analyses, EPA is not acting on these elements at this time.

6. Enforceability Issues

All measures and other elements in the SIP must be enforceable by the State and EPA (see sections 172(c)(6), 110(a)(2)(A) and 57 FR 13556). The EPA criteria addressing the enforceability of SIPs and SIP revisions were stated in a September 23, 1987 memorandum (with attachments) from J. Craig Potter, Assistant Administrator for Air and Radiation, *et al.* (see 57 FR 13541). Nonattainment area plan provisions also must contain a program to provide for enforcement of control measures and other elements in the SIP (see section 110(a)(2)(C)).

The specific control measures contained in this April 22, 1996 revision to the SIP are addressed above in Section II.A.3., ''Control Strategy.'' The Colorado Air Quality Control Commission State Implementation Plan-Specific Regulation for Nonattainment Areas, Section II.C., Telluride Nonattainment Area Street Sanding Requirements, became effective on October 30, 1995. This regulation outlines street sanding requirements for all street sanding materials used in the Telluride nonattainment area and details testing and recordkeeping requirements. All street sanding material used within the Telluride nonattainment area must equal or exceed a standard of less than 2% fines. All materials will be tested to ensure compliance with this standard, and the test results must be provided to the purchaser upon delivery.

By June 1 of each year, beginning in 1997, each user of street sanding materials must prepare and submit a report to the Division which details (1) the total amount of sanding material (both new and recycled) used; (2) the total amount of salt or other de-icing chemicals used; (3) the number of lane miles typically sanded during each deployment; and (4) the total number of deployment episodes. By September 30 of each year, beginning in 1996, each user of street sanding materials must prepare and submit a report to the Division which provides a copy of all independent tests performed and the name and address of all suppliers of street sanding material along with a full description of the location of the supplier's aggregate pit from which all material was supplied.

The State of Colorado has a program that will ensure that the measures contained in the SIP are adequately enforced. The Colorado Air Pollution Control Division (APCD) has the authority to implement and enforce all control measures adopted by the AQCC. In addition, Colorado statute provides that the APCD shall enforce against any ''person'' who violates the emission control regulations of the AQCC, the requirements of the SIP, or the requirements of any permit. The definition of ''person'' includes any ''municipal corporation, county, city and county or other political subdivision of the State,'' such as the Town of Telluride and San Miguel County. Civil penalties of up to $15,000 per day per violation are provided for in the State statute for any person in violation of these requirements, and criminal penalties are also provided for in the State statute.

Thus, EPA believes that the control measures contained in the SIP revision for Telluride are enforceable and that the APCD has adequate enforcement capabilities to ensure compliance with those control measures. The TSD contains further information on enforceability requirements and a discussion of the personnel and funding intended to support effective implementation of the control measures.

III. Final Action

EPA is approving Colorado's SIP revision, submitted by the Governor with a letter dated April 22, 1996, for the Telluride moderate PM_{10} nonattainment area. This submittal addressed revisions to the maintenance demonstration to incorporate emissions reductions credit for the new street sanding requirements. The SIP now adequately demonstrates continued maintenance of the PM_{10} NAAQS in Telluride through 1997; therefore, EPA converts its September 19, 1994 conditional approval (59 FR 47807) to a full approval.

EPA is publishing this action without prior proposal because the Agency views this as a noncontroversial amendment and anticipates no adverse comments. However, in a separate document in this Federal Register publication, EPA is proposing to approve the SIP revision should adverse or critical comments be filed. This action will be effective December 3, 1996 unless, by November 4, 1996, adverse or critical comments are received.

If EPA receives such comments, this action will be withdrawn before the effective date by publishing a subsequent notice that will withdraw

the final action. All public comments received will be addressed in a subsequent final rule based on this action serving as a proposed rule. EPA will not institute a second comment period on this action. Any parties interested in commenting on this action should do so at this time. If no such comments are received, the public is advised that this action will be effective on December 3, 1996.

Nothing in this action should be construed as permitting or allowing or establishing a precedent for any future request for revision to any SIP. Each request for revision to a SIP shall be considered separately in light of specific technical, economic, and environmental factors and in relation to relevant statutory and regulatory requirements.

IV. Administrative Requirements

A. Executive Order 12866

This action has been classified as a Table 3 action for signature by the Regional Administrator under the procedures published in the Federal Register on January 19, 1989 (54 FR 2214–2225), as revised by a July 10, 1995 memorandum from Mary Nichols, Assistant Administrator for Air and Radiation. The Office of Management and Budget (OMB) has exempted this regulatory action from E.O. 12866 review.

B. Regulatory Flexibility Act

Under the Regulatory Flexibility Act, 5 U.S.C. 600, *et seq.*, EPA must prepare a regulatory flexibility analysis assessing the impact of any proposed or final rule on small entities. 5 U.S.C. 603 and 604. Alternatively, EPA may certify that the rule will not have a significant economic impact on a substantial number of small entities. Small entities include small businesses, small not-for-profit enterprises, and government entities with jurisdiction over populations of less than 50,000.

SIP approvals under section 110 and subchapter I, part D of the Clean Air Act do not create any new requirements, but simply approve requirements that the State is already imposing. Therefore, because the Federal SIP approval does not impose any new requirements, I certify that it does not have a significant impact on any small entities affected. Moreover, due to the nature of the Federal-State relationship under the Act, preparation of a regulatory flexibility analysis would constitute Federal inquiry into the economic reasonableness of state action. The Clean Air Act forbids EPA to base its actions concerning SIPs on such grounds. *Union Electric Co.* v. *U.S. E.P.A.*, 427 U.S. 246, 256–66 (1976); 42 U.S.C. 7410(a)(2).

C. Unfunded Mandates

Under Section 202 of the Unfunded Mandates Reform Act of 1995 (''Unfunded Mandates Act''), signed into law on March 22, 1995, EPA must prepare a budgetary impact statement to accompany any proposed or final rule that includes a Federal mandate that may result in estimated costs to State, local, or tribal governments in the aggregate; or to the private sector, of $100 million or more. Under Section 205, EPA must select the most cost-effective and least burdensome alternative that achieves the objectives of the rule and is consistent with statutory requirements. Section 203 requires EPA to establish a plan for informing and advising any small governments that may be significantly or uniquely impacted by the rule.

EPA has determined that the approval action promulgated does not include a Federal mandate that may result in estimated costs of $100 million or more to either State, local, or tribal governments in the aggregate, or to the private sector. This Federal action proposes to approve pre-existing requirements under State or local law, and imposes no new Federal requirements. Accordingly, no additional costs to State, local, or tribal governments, or to the private sector, result from this action.

D. Submission to Congress and the General Accounting Office

Under 5 U.S.C. 801(a)(1)(A) as added by the Small Business Regulatory Enforcement Fairness Act of 1996, EPA submitted a report containing this rule and other required information to the U.S. Senate, the U.S. House of Representatives and the Comptroller General of the General Accounting Office prior to publication of this rule in today's Federal Register. This rule is not a ''major rule'' as defined by 5 U.S.C. 804(2).

E. Petitions for Judicial Review

Under section 307(b)(1) of the Clean Air Act, petitions for judicial review of this action must be filed in the United States Court of Appeals for the appropriate circuit by December 3, 1996. Filing a petition for reconsideration by the Administrator of this final rule does not affect the finality of this rule for the purposes of judicial review nor does it extend the time within which a petition for judicial review may be filed, and shall not postpone the effectiveness of such rule or action. This action may not be challenged later in proceedings to enforce its requirements. (See section 307(b)(2).)

List of Subjects in 40 CFR Part 52

Environmental protection, Air pollution control, Incorporation by reference, Intergovernmental relations, Particulate matter, Reporting and recordkeeping requirements.

Dated: August 29, 1996.

Patricia D. Hull,

Acting Regional Administrator.

40 CFR Part 52 is amended as follows:

1. The authority citation for part 52 continues to read as follows:

PART 52—APPROVAL AND PROMULGATION OF IMPLEMENTATION PLANS

Authority: 42 U.S.C. 7401–7671q.

2. Section 52.320 is amended by adding paragraph (c)(75) to read as follows:

§ 52.320 Identification of plan.

* * * * *

(c) * * *

(75) The Governor of Colorado submitted revisions to the PM_{10} moderate nonattainment area State Implementation Plan (SIP) for Telluride, Colorado with a letter dated April 22, 1996. The submittal was made to satisfy the State's commitment to adopt additional control measures necessary to demonstrate continued maintenance of the PM_{10} National Ambient Air Quality Standards through 1997. Due to the satisfaction of this commitment, the SIP now adequately meets the quantitative milestone requirement.

(i) Incorporation by reference.

(A) Colorado Air Quality Control Commission State Implementation Plan-Specific Regulation for Nonattainment Areas, 5 CCR 1001–20, Section II.C., Telluride Nonattainment Area Street Sanding Requirements, adopted August 17, 1995 and effective October 30, 1995.

[FR Doc. 96–25465 Filed 10–3–96; 8:45 am]

BILLING CODE 6560–50–P

DEPARTMENT OF HEALTH AND HUMAN SERVICES

Public Health Service

42 CFR Part 57

RIN 0906–AA40

Grants for Nurse Practitioner and Nurse Midwifery Programs

AGENCY: Health Resources and Services Administration, HHS.

ACTION: Final regulation.

SUMMARY: This final rule revises the existing regulations governing the program for Grants for Nurse Practitioner and Nurse Midwifery Programs authorized by section 822(a) of the Public Health Service Act (the Act), to make a technical change by deleting a program requirement for projects to collect and evaluate certain data. The specified data are no longer needed by the Department.

EFFECTIVE DATE: These regulations are effective October 4, 1996.

FOR FURTHER INFORMATION CONTACT: Jennifer Burks, Chief, Planning, Evaluation, and Legislation Branch, Office of Research and Planning, Bureau of Health Professions, Health Resources and Services Administration, room 8–67, Parklawn Building, 5600 Fishers Lane, Rockville, Maryland 20857; telephone: (301) 443–1590.

SUPPLEMENTARY INFORMATION: This final rule amends the existing regulations for the Grants for Nurse Practitioner and Nurse Midwifery Programs, governed by section 822(a) of the Public Health Service Act (42 U.S.C. 296m) to remove an existing requirement in § 57.2405 which is no longer needed by the Department.

Section 57.2405(c) currently requires collection and evaluation of program data for the following:

(1) Systematic evaluation by faculty and students of the program curriculum in relation to the purposes, objectives, and conceptual framework of the program.

(2) Evaluation of the effectiveness of the program in relation to its purposes and objectives.

(3) Information concerning the number of student applicants and students enrolled, student characteristics (such as age, sex, race, education background, and previous work experience including type of position, speciality, and work setting), and student performance in classroom work and clinical practice.

(4) Information concerning the number of graduates per class, the attrition rate, characteristics of graduates (such as age, sex, race, educational background, and previous work experience, including type of position, speciality, and work setting), employment after graduation (including setting and location) and utilization and performance of graduates (including employer assessment.)

The Paperwork Reduction Act of 1995 states in 44 U.S.C. 3506(c)(1)(A)(I) that with respect to the collection of information and the control of paperwork, each agency shall ''review each collection of information before submission to the Director for review under this chapter, including (I) an evaluation of the need for the collection of information; . . .''. The movement of these programs from certificate level (housed in a variety of entities) to masters level programs (housed in universities) no longer requires the collection of data listed in § 57.2405(c)(1), (c)(3), and (c)(4) to assure quality. Both university approval systems and accreditations criteria now assure minimal quality requirements. Therefore, we are revising paragraph (c) to remove these data elements from the regulations.

Justification for Omitting Notice of Proposed Rulemaking

Since this amendment is of a technical nature, the Secretary has determined, pursuant to 5 U.S.C. 553 and departmental policy, that it is unnecessary and impractical to follow proposed rulemaking procedures or to delay the effective date of this regulation.

Economic Impact

Executive Order 12866 requires that all regulations reflect consideration of alternative, of costs, of benefits, of incentives, of equity, and of available information. Regulations must meet certain standards, such as avoiding unnecessary burden. Regulations which are ''significant'' because of costs, adverse effects on the economy, inconsistency with other agency actions, effects on the budget, or novel legal or policy issues, require special analysis.

The Department believes that the resources required to implement the requirement in this final rule is minimal. This rule removes a project requirement for collecting specific data which removes an added burden on small entities. Therefore, in accordance with the Regulatory Flexibility Act of 1980 (RFA), and the Small Business Regulatory Enforcement Fairness Act of 1996 which amended the RFA, the Secretary certifies that these regulations will not have a significant impact on a substantial number of small entities. For the same reasons, the Secretary has also determined that this is not a ''significant'' rule under Executive Order 12866.

Paperwork Reduction Act of 1980

This final rule removes a reporting requirement for program projects which is currently approved by the Office of Management and Budget (OMB) under the Paperwork Reduction Act of 1995 under assigned control number 0915–0060. The reporting requirements for data collection in § 57.2405(c)(1), (c)(3), and (c)(4) are no longer useful for program purposes. These requirements will be removed from this clearance package at its next renewal.

List of Subjects under 42 CFR Part 57

Aged, Dental health, Education of the disadvantaged, Educational facilities, Educational study programs, Grant programs—education, Grant programs—health, Health facilities, Health professions, Loan programs—health, Medical and dental schools, Student aid, Reporting and recordkeeping requirements, Scholarships and fellowships.

(*Catalog of Federal Domestic Assistance*, No. 93.298, Grants for Nurse Practitioner, Nurse Midwifery Program)

Approved: September 30, 1996.

Ciro V. Sumaya,

Administrator, Health Resources and Services Administration.

Accordingly, 42 CFR part 57, subpart Y is amended to read as set forth below:

PART 57—GRANTS FOR CONSTRUCTION OF TEACHING FACILITIES, EDUCATIONAL IMPROVEMENTS, SCHOLARSHIPS AND STUDENT LOANS

Subpart Y—Grants for Nurse Practitioner and Nurse Midwifery Programs

1. The authority for subpart Y continues to read as follows:

Authority: Sec. 215 of the Public Health Service Act, 58 Stat. 690, as amended, 63 Stat. 35 (42 U.S.C. 216); sec. 822(a) of the Public Health Service Act, 89 Stat. 361, as amended by 99 Stat. 394–395 and 548 (42 U.S.C. 296m).

2. Section 57.2405 is amended by revising paragraph (c) to read as follows:

§ 57.2405 Project requirements.

* * * * *

(c) In accordance with the plan set forth in its approved application, the project shall evaluate the effectiveness of the program in relation to its purposes and objectives.

* * * * *

[FR Doc. 96–25428 Filed 10–3–96; 8:45 am]

BILLING CODE 4160–15–P

DEPARTMENT OF TRANSPORTATION

Coast Guard

46 CFR Parts 108, 110, 111, 112, 113, and 161

[CGD 94–108]

RIN 2115–AF24

Electrical Engineering Requirements for Merchant Vessels

AGENCY: Coast Guard, DOT.

ACTION: Notice of policy for interim rule.

SUMMARY: Two industry standards affecting the Coast Guard's electrical engineering regulations for merchant vessels have been revised recently or will be revised in the near future. Until the Coast Guard amends its regulations to incorporate new standards, persons wishing to apply a provision of one of these industry standards instead of a provision in the current regulations may submit for approval on a case-by-case basis, a request under the equivalency provisions in the current regulations.

FOR FURTHER INFORMATION CONTACT: Mr. Gerald P. Miante, Project Manager, Office of Design and Engineering Standards (G–MSE), (202) 267–2206.

SUPPLEMENTARY INFORMATION: On June 4, 1996, the Coast Guard published an interim rule entitled ''Electrical Engineering Requirements for Merchant Vessels'' (61 FR 28260). This rule went into effect on September 30, 1996, and amends the Coast Guard's electrical engineering regulations in 46 CFR parts 108, 110, 111, 112, 113, and 161.

First, the regulations reference provisions in the 1995 edition of the ''Rules for Building and Classing Steel Vessels'' of the American Bureau of Shipping (ABS). In May 1996, ABS adopted a revised edition of this standard, which the Coast Guard intends to incorporate into the final rule for electrical engineering regulations within the next few months.

Second, the regulations reference provisions in the 1983 edition of the ''Recommended Practice for Electric Installations on Shipboard'' (Standard 45) of the institute of Electrical and Electronic Engineers (IEEE). IEEE is in the process of revising this standard and plans to issue a draft version in late November 1996 and a final version by mid-January 1997. The Coast Guard will review and, if appropriate, will incorporate this standard in its electrical engineering regulations as well.

Until the Coast Guard incorporates these standards in the regulations by the necessary rulemaking action, persons may request the use of these new standards by submitting a request in accordance with either 46 CFR 110.20–1 (for a provision in 46 CFR chapter I, subchapter J) or 46 CFR 161.002–17 (for a provision in 46 CFR part 161, subpart 161.002) of the interim rule. These requests are considered for approval on a case-by-case basis under Coast Guard regulations.

Dated: September 26, 1996.

Howard L. Hime,

Acting Director of Standards, Marine Safety and Environmental Protection.

[FR Doc. 96–25209 Filed 10–3–96; 8:45 am]

BILLING CODE 4910–14–M

FEDERAL COMMUNICATIONS COMMISSION

47 CFR Part 73

[MM Docket No. 96–4; RM–8733]

Radio Broadcasting Services; Salem and Cherokee Village, AR

AGENCY: Federal Communications Commission.

ACTION: Final rule.

SUMMARY: In response to a petition for rule mamking filed on behalf of Bragg Broadcasting Corporation and KFCM, Inc., this document substitutes Channel 265A for Channel 240A at Salem, Arkansas, and modifies the license of Bragg Broadcasting Corporation for Station KSAR(FM), as requested. Additionally, to accommodate the modification at Salem, Channel 252A is substituted for Channel 265A at Cherokee Village, and the license of KFCM, Inc. for Station KFCM(FM) is modified accordingly, as requested. *See* 61 FR 4392, February 6, 1996. Coordinates for Channel 265A at Salem, Arkansas, are 36–25–00 and 91–48–00; coordinates for Channel 252A at Cherokee Village, Arkansas, are 36–16–29 and 91–30–18. With this action, the proceeding is terminated.

EFFECTIVE DATE: November 4, 1996.

FOR FURTHER INFORMATION CONTACT: Nancy Joyner, Mass Media Bureau, (202) 418–2180.

SUPPLEMENTARY INFORMATION: This is a synopsis of the Commission's *Report and Order,* MM Docket No. 96–4, adopted September 13, 1996, and released September 20, 1996. The full text of this Commission decision is available for inspection and copying during normal business hours in the FCC's Reference Center (Room 239), 1919 M Street, NW., Washington, DC. The complete text of this decision may also be purchased from the Commission's copy contractors, International Transcription Service, Inc., (202) 857–3800, located at 1919 M Street, NW., Room 246, or 2100 M Street, NW., Suite 140, Washington, DC 20037.

List of Subjects in 47 CFR Part 73

Radio broadcasting.

Part 73 of title 47 of the Code of Federal Regulations is amended as follows:

PART 73—[AMENDED]

1. The authority citation for part 73 continues to read as follows:

Authority: Secs. 303, 48 Stat., as amended, 1082; 47 U.S.C. 154, as amended.

§ 73.202 [Amended]

2. Section 73.202(b), the Table of FM Allotments under Arkansas, is amended by removing Channel 265A and adding Channel 252A at Cherokee Village.

3. Section 73.202(b), the Table of FM Allotments under Arkansas, is amended by removing Channel 240A and adding Channel 265A at Salem.

Federal Communications Commission.

John A. Karousos,

Chief, Allocations Branch, Policy and Rules Division, Mass Media Bureau.

[FR Doc. 96–25489 Filed 10–3–96; 8:45 am]

BILLING CODE 6712–01–F

DEPARTMENT OF COMMERCE

National Oceanic and Atmospheric Administration

50 CFR Part 679

[Docket No. 960129018–6018–01; I.D. 093096A]

Fisheries of the Exclusive Economic Zone Off Alaska; Pacific Ocean Perch in the Eastern Gulf of Alaska

AGENCY: National Marine Fisheries Service (NMFS), National Oceanic and Atmospheric Administration (NOAA), Commerce.

ACTION: Closure.

SUMMARY: NMFS is prohibiting retention of Pacific ocean perch in the Eastern Regulatory Area of the Gulf of Alaska (GOA). NMFS is requiring that catches of Pacific ocean perch in this area be treated in the same manner as prohibited species and discarded at sea with a minimum of injury. This action is necessary because the Pacific ocean perch total allowable catch (TAC) in the Eastern Regulatory Area of the GOA has been reached.

EFFECTIVE DATE: 1200 hrs, Alaska local time (A.l.t.), September 30, 1996, until 2400 hrs, A.l.t., December 31, 1996.

FOR FURTHER INFORMATION CONTACT: Thomas Pearson, 907–486–6919.

SUPPLEMENTARY INFORMATION: The groundfish fishery in the GOA exclusive economic zone is managed by NMFS according to the Fishery Management Plan for Groundfish of the Gulf of Alaska (FMP) prepared by the North Pacific Fishery Management Council under authority of the Magnuson Fishery Conservation and Management Act. Fishing by U.S. vessels is governed by regulations implementing the FMP at subpart H of 50 CFR part 600 and 50 CFR part 679.

In accordance with § 679.20(c)(3)(ii), the TAC for Pacific ocean perch in the Eastern Regulatory Area of the GOA was established by the Final 1996 Harvest Specifications of Groundfish (61 FR 4304, February 5, 1996), as 2,366 metric tons.

The Director, Alaska Region, NMFS, has determined, in accordance with § 679.20(d)(2), that the TAC for Pacific ocean perch in the Eastern Regulatory Area of the GOA has been reached. Therefore, NMFS is requiring that further catches of Pacific ocean perch in the Eastern Regulatory Area of the GOA be treated as prohibited species in accordance with § 679.21(b).

Classification

This action is taken under 50 CFR 679.20 and is exempt from review under E.O. 12866.

Authority: 16 U.S.C. 1801 *et seq.*

Dated: September 30, 1996.

Gary C. Matlock,

Director, Office of Sustainable Fisheries, National Marine Fisheries Service.

[FR Doc. 96–25464 Filed 10–1–96; 9:05 am]

BILLING CODE 3510–22–F

Proposed Rules

Federal Register
Vol. 61, No. 194
Friday, October 4, 1996

This section of the FEDERAL REGISTER contains notices to the public of the proposed issuance of rules and regulations. The purpose of these notices is to give interested persons an opportunity to participate in the rule making prior to the adoption of the final rules.

DEPARTMENT OF AGRICULTURE

Animal and Plant Health Inspection Service

7 CFR Parts 201 and 361

[Docket No. 93–126–4]

RIN 0579–AA64

Imported Seed and Screenings

AGENCY: Animal and Plant Health Inspection Service, USDA.

ACTION: Proposed rule and notice of public hearing.

SUMMARY: We are proposing to amend the ''Imported Seed'' regulations by moving the regulations to a different chapter in the Code of Federal Regulations; establishing a seed analysis program with Canada; and allowing U.S. companies that import seed for cleaning or screenings for processing to enter into compliance agreements with the Animal and Plant Health Inspection Service. These proposed changes are necessary to reflect recent amendments to the Federal Seed Act and the transfer of responsibility for the import provisions of the act from the Agricultural Marketing Service to the Animal and Plant Health Inspection Service. These proposed changes would bring the imported seed regulations into agreement with the amended Federal Seed Act, eliminate the need for sampling shipments of Canadian-origin seed at the border, and allow certain seed importers to clean seed without the direct supervision of an Animal and Plant Health Inspection Service inspector.

DATES: Consideration will be given only to comments received on or before December 3, 1996. We also will consider comments made at a public hearing to be held on November 21, 1996, from 9:00 a.m. until 12:00 noon.

ADDRESSES: Please send an original and three copies of your comments to Docket No. 93–126–4, Regulatory Analysis and Development, Policy and Program Development, Animal and Plant Health Inspection Service, 4700 River Road Unit 118, Riverdale, MD 20737–1238. Please state that your comments refer to Docket No. 93–126–4. Comments received may be inspected at USDA, room 1141, South Building, 14th Street and Independence Avenue SW., Washington, DC, between 8 a.m. and 4:30 p.m., Monday through Friday, except holidays. Persons wishing to inspect comments are requested to call ahead on (202) 690–2817 to facilitate entry into the comment reading room. The public hearing will be held on November 21, 1996, at the USDA Center at Riverside, 4700 River Road, Riverdale, MD.

FOR FURTHER INFORMATION CONTACT: Ms. Polly Lehtonen, Botanist, Biological Assessment and Taxonomic Support, PPQ, APHIS, 4700 River Road Unit 133, Riverdale, MD 20737–1236, (301) 734–8896.

SUPPLEMENTARY INFORMATION:

Background

Under the authority of the Federal Seed Act of 1939, as amended (FSA), the U.S. Department of Agriculture (USDA) regulates the importation and interstate movement of certain agricultural and vegetable seed and screenings. Title III of the FSA, ''Foreign Commerce,'' requires shipments of imported agricultural and vegetable seed to be labeled correctly and to be tested for the presence of the seeds of certain noxious weeds as a condition of entry into the United States. The USDA's regulations implementing the provisions of the FSA are found at 7 CFR part 201; the regulations implementing the foreign commerce provisions of the FSA are found in §§ 201.101 through 201.230 (referred to below as the regulations).

A final rule published in the Federal Register on September 22, 1982 (47 FR 41725), and effective October 1, 1982, amended the delegations of authority from the Secretary of Agriculture to transfer the responsibility contained in Title III of the FSA for inspection of imported seeds from the Agricultural Marketing Service (AMS) to the Animal and Plant Health Inspection Service (APHIS).

On September 15, 1994, we published an advance notice of proposed rulemaking in the Federal Register (59 FR 47286–47287, Docket No. 93–126–1) announcing our plans to revise the FSA regulations to reflect amendments to the FSA and the transfer of regulatory authority for Title III of the FSA from AMS to APHIS. We also noted our intention to revise the list of noxious weed seeds contained in the regulations promulgated under the FSA to include seeds of all the noxious weeds listed in the regulations promulgated under the Federal Noxious Weed Act (FNWA). We solicited comments on the advance notice of proposed rulemaking for 45 days ending October 31, 1994. By that date we received 13 comments, from seed companies and importers, State agricultural agencies, and universities. The commenters generally supported the issues raised in the advance notice of proposed rulemaking, although some did have specific concerns. Two of those concerns pertained to the testing and cleaning of imported seed and are addressed in this proposed rule. The remaining concerns were addressed in the proposed rule that is discussed in the next paragraph.

Due to concerns regarding the potential presence of noxious weed seeds in lots of imported seed, we decided to begin with an update of the noxious weed seed provisions of the FSA regulations. Therefore, on March 23, 1995, we published in the Federal Register (60 FR 15257–15260, Docket No. 93–126–2) a proposal to amend the FSA regulations by: (1) Expanding the list of noxious weed seeds to include seeds of all of the weeds listed in the FNWA regulations; (2) modifying existing tolerances for certain weed seeds in imported shipments of agricultural and vegetable seed; and (3) updating the taxonomic names of several weeds listed in the FSA regulations. After reviewing the comments submitted, we published a final rule in the Federal Register on July 12, 1995 (60 FR 35829–35831, Docket No. 93–126–3) that adopted the provisions of the proposal as a final rule.

Having completed our update of the noxious weed provisions of the regulations, we are now proposing to revise the FSA regulations to reflect amendments to the FSA and the transfer of regulatory authority for Title III of the FSA from AMS to APHIS. To reflect that change in authority, we are proposing to move the regulations from their current location in 7 CFR chapter I, which is one of the chapters in which AMS

regulations appear, to 7 CFR chapter III, where APHIS' plant-related regulations appear. As part of that proposed move, we would update the regulations to reflect amendments to the FSA and make nonsubstantive editorial changes to the arrangement and wording of the regulatory text to improve its clarity. The proposed disposition of the regulations in §§ 201.101 through 201.230 is shown in the following table:

Current location	Proposed disposition
201.101	Removed.
201.102	Removed.
201.103	Removed.
201.104	Removed.
201.105	361.6.
201.106	Removed.
201.201	361.1.
201.202	361.1.
201.203	361.1.
201.204	Removed.
201.205	Removed.
201.206	Removed.
201.207	Removed.
201.208(a)	Removed.
201.208(b)	361.5.
201.209	Removed.
201.210	361.5.
201.211	361.5.
201.212	361.5.
201.213	361.5.
201.214	Removed.
201.215	Removed.
201.216	Removed.
201.217	361.5.
201.218	361.5.
201.219	361.5.
201.220	Removed.
201.221	361.4.
201.221a	361.5.
201.222	361.3, 361.4.
201.223	361.2.
201.224	361.3.
201.225	361.4, 361.8.
201.226	361.8.
201.227	Removed.
201.228	361.4.
201.228a	Removed.
201.229	361.4.
201.230	361.4.

Sections Removed From the Proposed Regulations

The Federal Seed Act Amendments of 1982 (Pub. L. 97–439) removed the requirement for the testing of imported seed to determine if it meets the pure live seed requirements of the FSA and whether the seed contains more than 2 percent by weight of common weed seeds. Once those amendments became effective, the regulations should have been amended to reflect the removal of those statutory requirements, but that did not occur. Therefore, as part of this proposed rule, we would remove § 201.102, ''Pure live seed;'' § 201.104, ''Weed seeds;'' and 201.206, ''Pure live seed,'' which is a definition of the term. Without a statutory basis for those requirements, we have no reason or authority to retain those provisions of the regulations. Similarly, we are also proposing to remove § 201.106, ''Mixtures not considered adulterations,'' from the regulations because the 1982 amendments to the FSA also removed 7 U.S.C. 1583 (originally designated as § 303 of the FSA), which related to adulterated seed.

The 1994 Uruguay Round Agreements Act (Pub. L. 103–465) further amended the FSA by removing the requirement that alfalfa and red clover seeds imported from certain countries be stained. When APHIS published a final rule on April 4, 1995 (60 FR 16979, Docket No. 95–004–1) to remove the provisions of the regulations regarding staining, we neglected to remove § 201.220, ''Certificate or declaration of origin.'' That section requires that a certificate or declaration accompany shipments of alfalfa or red clover in order to establish the country or region of origin of the seed, which is a consideration that is directly related to the now-eliminated staining requirement. Similarly, § 201.103 of the regulations should also have been removed. That section states that alfalfa seed and red clover seed of foreign origin other than the Dominion of Canada have been determined to be unadapted for general agricultural use in the United States; prior to the effective date of the changes brought about by the 1994 Uruguay Round Agreements Act, the FSA required unadapted alfalfa and red clover seed to be stained. Because the staining requirements of the FSA have been removed, we are proposing to remove §§ 201.103 and 201.220 from the regulations.

Paragraph (a) of § 201.101 of the regulations lists 48 kinds of seeds that are most often imported for purposes other than seeding and have been exempted, on that basis, from the import provisions of the regulations when imported for purposes other than seeding and accompanied by a declaration. Based on our experience with seed importations since 1982, we believe that exemption can be extended to all agricultural and vegetable seed. Therefore, we are proposing to include in the proposed new regulations an exemption for all agricultural seed and vegetable seed imported for purposes other than seeding provided that the seed is accompanied by a declaration that states the purpose for which the seed is being imported. Because all agricultural and vegetable seed would be included in this proposed exemption, there would be no need to maintain a list of exempted seeds such as that found in § 201.101(a). Paragraph (b) of § 201.101 pertains to the pure live seed requirement that was, as discussed in a previous paragraph, removed by the Federal Seed Act Amendments of 1982. Because the list of exempted seeds would no longer be necessary and the pure live seed requirement has been removed, we are proposing to remove § 201.101 from the regulations.

Sections 201.204, 201.205, and 201.207 each contain provisions that would be unnecessary if the regulations are moved out of part 201 as proposed. Specifically, § 201.204 is a definition of *Agricultural Marketing Service* and § 201.205 is a definition of *Collector of Customs*, neither of which would be needed in regulations administered by APHIS. Section 201.207 states that definitions found in §§ 201.1 through 201.159 apply to the imported seed regulations, and such a statement would not be necessary in proposed new 7 CFR part 361, which would have a single section that contained all definitions applicable to the part. Therefore, we are proposing to remove §§ 201.204, 201.205, and 201.207 from the regulations.

Sections 201.214, 201.215, and 201.216 contain instructions for sealing, identifying, and forwarding seed samples from the port of entry to seed laboratories for analysis, test, or examination, and § 201.227 calls for the submission of a report to the collector of customs at the port of entry following the cleaning or processing of certain seed and the destruction of the refuse. Similarly, § 201.209 states that the collector of customs shall, upon request, draw and forward samples of all screenings imported or offered for importation. Because, for the reasons explained below, customs officers would no longer be collecting samples of seed or screenings, those instructions would no longer be necessary. Further, APHIS inspectors already possess the necessary equipment, forms, and knowledge to draw and forward seed samples. Therefore, we are proposing to remove §§ 201.209, 201.214, 201.215, 201.216, and 201.227 from the regulations.

Changes in the Regulations

Section 201.105, ''Noxious weed seeds,'' of the regulations would become § 361.6 in the proposed new regulations. The noxious weeds listed in that section would remain the same, but we are proposing to adjust the format of the list. Currently, seeds with tolerances applicable to their introduction are

identified on the list by a superscript numeral one. In proposed new § 361.6, seeds without tolerances would be listed in paragraph (a)(1), and seeds with tolerances would be listed in paragraph (a)(2). We believe that listing each category of seeds separately would make both lists clearer and easier to use. Proposed new § 361.6 would also include portions of paragraph (b) of § 201.51, ''Inert matter''; that paragraph lists categories of noxious weed seeds that are considered to be inert matter and thus would not be counted as weed seeds. In duplicating that text, however, we would include only those categories that apply directly to the noxious weeds listed in proposed § 361.6(a); those provisions of § 201.51(b) that apply to common weeds or other plants not listed as noxious weeds would not be carried over into proposed new § 361.6(c).

The definitions found in §§ 201.201 through 201.203—*agricultural seeds, vegetable seeds, and screenings*—would be moved intact to proposed new § 361.1, ''Definitions.'' In addition, we would also carry over six other definitions from § 201.2 of the FSA regulations that apply to the regulation of imported seed: *Coated seed, declaration, hybrid, lot of seed, mixture,* and *person.* Seven other terms included in proposed § 361.1—*Administrator, Animal and Plant Health Inspection Service (APHIS), and APHIS inspector, import, port of first arrival, State, and United States*—are terms used by APHIS elsewhere in its regulations in 7 CFR chapter III and 9 CFR chapter I that are applicable to the proposed new regulations. Finally, we would include definitions for five additional terms in proposed § 361.1: *Pelleted seed, kind, variety, registered seed technologist,* and *official seed analyst.*

We would define *pelleted seed* as ''seed coated with a substance to achieve uniformity in its size, shape, or weight in order to improve the plantability or singulation of the seed.'' Seed that is very small or light or that is irregularly shaped is often pelleted in order to make the seed suitable for precision planting by machine. Although pelleted seed is a subset of coated seed, importers, distributors, and other elements of the seed industry draw a distinction between coated seed and pelleted seed. We believe, therefore, that it would serve the interests of clarity to define and refer to both coated and pelleted seed in the proposed new regulations.

We are proposing to include definitions for the terms *kind* and *variety* because those terms are used throughout the proposed regulations. *Kind* would be defined as ''one or more related species or subspecies that singly or collectively is known by one common name, e.g., soybean, flax, or carrot.'' *Variety* would be defined as ''a subdivision of a kind which is characterized by growth, plant, fruit, seed, or other characteristics by which it can be differentiated from other sorts of the same kind.'' These two proposed definitions are drawn directly from the definitions for those terms found in the FSA.

We are proposing to add definitions of *registered seed technologist* and *official seed analyst* to the proposed regulations because under proposed new § 361.8, ''Cleaning of imported seed and processing of certain Canadian-origin screenings,'' registered seed technologists and official seed analysts would be authorized to inspect representative samples of cleaned seed for noxious weed seed content and authorize, as appropriate, the cleaned seed to be released for entry into the United States. We would define *registered seed technologist* as ''a registered member of the Society of Commercial Seed Technologists.'' *Official seed analyst* would be defined as ''a registered member of the Association of Official Seed Analysts.'' These two societies represent seed technologists and seed analysts who serve in academic, private, and governmental capacities, and we are confident that the registered members of these societies possess the skills and knowledge necessary to accurately and reliably inspect cleaned seed for noxious weed seed content.

Paragraph (a) of § 201.208, ''Seed,'' duplicates the list found in § 201.101 of seeds that must be sampled only when imported for seeding purposes. As discussed above, we are proposing to exempt all vegetable seed and agricultural seed imported for purposes other than seeding from the sampling requirement and other import provisions of the regulations. With that proposed exemption in place, there would be no need to maintain the lists found in §§ 201.101 and 201.208(a). Earlier in this document, we proposed to remove § 201.101 from the regulations; we are likewise proposing to remove § 201.208(a) from the regulations. The provisions of § 201.208(b), which relate to the sampling and testing of small lots of imported seed, would be moved to proposed new § 361.5(a)(2).

With the exception of paragraph (e), we are proposing to move the provisions of § 201.210, ''Method of sampling,'' to proposed new § 361.5, ''Sampling of seeds.'' The provisions of §§ 201.211 through 201.213 and §§ 201.217 through 201.219 would be moved to proposed new § 361.5 as well. Paragraph (e) of § 201.210, which would be omitted, states that a quantity of seed designated as one lot shall be regarded as such for sampling purposes only if every portion or bag of seed in the quantity is uniform within permitted tolerances as to percentage of pure seed, percentage of germination and hard seed, percentage of weed seeds, and the rate of occurrence of noxious weed seed. We are proposing to remove that paragraph from the regulations because, as discussed above, purity, germination, and the presence of common weed seeds are no longer considerations that apply to imported seed. With regard to the rate of occurrence of noxious weed seed, that rate cannot be accurately determined until after the seed has been analyzed, so it cannot realistically be a consideration in determining the uniformity of a quantity of seed for sampling purposes.

The provisions of § 201.221, ''Exemptions,'' with the exception of paragraph (d), would be moved to proposed new § 361.4. Paragraph (d) exempts seed for seed production from the prohibition against importing seed that is adulterated or unfit for seeding purposes due to low pure live seed or is required to be stained. As discussed previously, staining and pure live seed content are no longer applicable to the imported seed regulations. Therefore, we are proposing to remove § 201.221(d) from the regulations.

Section 201.221a, ''Table 5,'' would be moved to proposed new § 361.5; the table would be expanded by adding, from table 1 in § 201.46 of the FSA regulations, the minimum weights of working samples for noxious weed seed examinations. The need for noxious weed seed examinations applies to both the importation and interstate movement of seeds, so we are proposing to copy the applicable information in § 201.46 and include it in the proposed new regulations.

Section 201.222, ''Declaration of purpose and labeling as to kind, variety, hybrid, and treatment,'' would, with the exception of paragraphs (a) and (d), be carried over to the proposed new regulations; § 201.222(c) would be moved to proposed § 361.4(b), and § 201.222(e) and (f) would be moved to proposed § 361.3(b). (Paragraph (b) of § 201.222 in the current regulations is reserved, i.e., contains no regulatory text.) Section 201.33, which is among the interstate commerce provisions of the FSA regulations, contains instructions and exceptions for labeling containers of seed. Because those

provisions apply to imported seed as well, we would copy those provisions into paragraphs (c) and (d) of proposed new § 361.3.

We are proposing to remove paragraph (a) of § 201.222 because it contains a list of certain seeds that must be accompanied at the time of importation by a statement setting forth the purpose for which the seeds are being imported, the statement serving to identify whether the seeds are being imported for seeding purposes and are thus subject to the regulations. That list would not be necessary in the proposed new regulations because all imported agricultural and vegetable seed would have to be accompanied by such a statement, and all agricultural and vegetable seed imported for seeding purposes would be subject to the regulations. Paragraph (d) of § 201.222 would be removed because it relates to the collector of customs notifying the USDA when the nature of a declaration is changed; that provision would not be necessary under the proposed new regulations because, as explained below, the collector of customs would no longer be responsible for inspecting or sampling imported seed or screenings.

Because AMS does not routinely assign its personnel to ports of entry, AMS could not have adequately enforced the import provisions of the FSA without the assistance of the Customs Service, which inspected and sampled imported seed and screenings offered for entry into the United States under joint AMS/Customs Service regulations. Since the responsibility for the import provisions of the FSA were transferred to APHIS, which does have personnel assigned to ports of entry, the assistance of Customs officers has been routinely necessary only at the smaller border crossings along the U.S./Canadian border that are staffed only by Customs personnel. If, as proposed in this document, all Canadian-origin seed is required to be accompanied by a certificate of analysis issued in Canada, the role of Customs officers with regard to imported seed would be reduced even further.

Section 201.223 would be moved to proposed § 361.2(d), and § 201.224 would be moved to proposed § 361.4(a)(3). The provisions of §§ 201.225, 201.226, and 201.228 would also be moved to the proposed new regulations, but in each section the provisions relating to reimbursement of Government expenses would be separated from the provisions relating to the supervision of cleaning of seed, destruction of refuse, and correction of labeling. The expense-related provisions would be moved to proposed new § 361.10, ''Costs and charges''; the provisions related to the cleaning of seed and destruction of refuse would be moved to proposed new § 361.8, ''Cleaning of imported seed and processing of certain Canadian-origin screenings,'' and the provisions related to correction of labeling would be moved to proposed § 361.4(b)(3). Proposed §§ 361.8 and 361.10 are explained in greater detail below.

Section 201.228a, ''Declaration of labeling,'' would be removed from the regulations. We are proposing to remove that section because, as discussed previously, the proposed new regulations would contain a declaration requirement in § 361.3. The provisions of § 201.228a regarding seed purity, germination, and hard seeds would be omitted because, as discussed above, those considerations no longer apply to imported seed.

Finally, the provisions of § 201.229 would be moved to proposed § 361.4(b)(2), and the provisions of § 201.230(a) would be moved to proposed § 361.4(b)(1). Paragraph (b) of § 201.230 relates to the drawing of samples by the collector of customs and would, therefore, be removed from the regulations for the reasons discussed above; the reimbursement-related provisions that comprise § 201.230(c) would be moved to proposed § 361.10.

Certificate of Analysis for Canadian Seed

We are proposing to initiate a seed import program with Canada under which all Canadian-grown seed shipments imported into the United States would have to be accompanied by a certificate of analysis issued by Agriculture and Agri-Food Canada. The certificate would confirm that the seed in each lot had been analyzed for noxious weed seed content at the issuing laboratory and, if the seed was being imported for seeding (planting) purposes, the certificate would confirm that the seed met the noxious weed seed tolerances of 7 CFR 361.6 (the section of the amended regulations dealing with noxious weed seeds). If the seed was being imported for cleaning, the certificate would have to name the kinds of noxious weed seeds that were to be removed from the lot of seed.

Under the proposed program, we would also accept certificates that had been issued by an accredited laboratory designated by the Canadian agriculture minister pursuant to Section 14 of the Canadian Agricultural Products Act; such accredited laboratories operate under the authority of an accredited seed analyst.

This proposed certificate requirement would not apply to seed that originated in a country other than Canada that was offered for entry into the United States at a Canadian border port; such seed would still have to be sampled at the port of entry.

One of the commenters responding to our September 1994 advance notice of proposed rulemaking was concerned that the testing in Canada would be conducted on samples drawn from bulk bins prior to the packaging of individual lots of seed; such a process, he feared, would result in samples that were not representative of the seed in each lot. This proposed rule, however, makes it clear that each lot would have to be sampled and analyzed for noxious weed seed content.

Because a noxious weed seed examination would have already been conducted, Canadian-origin seed entering the United States with a certificate of analysis would be exempted from the sampling requirements of the regulations. Because only certificates issued by the Canadian government or an accredited and officially recognized laboratory would be accepted, this proposed change, which has the endorsement of Agriculture and Agri-Food Canada, would facilitate the importation of Canadian-origin seed and reduce the workload on APHIS inspectors at ports of entry along the U.S./Canadian border without increasing the risk of noxious weed seeds entering the United States in shipments of seed.

Cleaning and Processing of Imported Seed and Screenings

As noted above, we are proposing to move the provisions of § 201.225 that allow for the cleaning of imported seed found to contain noxious weed seeds at a level higher than tolerances permit. Under the current regulations, the cleaning of the seeds must be accomplished under the supervision of an employee or authorized agent of the USDA; similarly, under § 201.226, the refuse from that cleaning must be destroyed under the supervision of an employee or authorized agent of the USDA. Although the proposed regulations would continue to provide for USDA supervision of those activities, we are proposing to give companies in the United States the option of entering into a compliance agreement to facilitate the cleaning of imported seed. Persons wishing to enter into a compliance agreement could obtain compliance agreement forms from APHIS without charge.

As presented in our September 1994 advance notice of proposed rulemaking,

this proposed compliance agreement program would have been limited to importers wishing to import seed from Canada for cleaning. One of the commenters responding to that advance notice of proposed rulemaking urged us not to restrict the program to Canadian seed, noting that significant amounts of seed are commonly imported from elsewhere in the world for cleaning and packaging. We agree with that commenter; thus, the program described in this proposed rule would allow a company that imports seed for cleaning from a country other than Canada to enter into a compliance agreement with APHIS.

Compliance agreements would also play a role in another aspect of the proposed regulations. The FSA and the regulations allow the importation of screenings from seeds of wheat, oats, barley, rye, buckwheat, field corn, sorghum, broomcorn, flax, millet, proso, soybeans, cowpeas, field peas, or field beans as long as the screenings are not being imported for seeding (planting) purposes and the declaration accompanying the screenings indicates that the screenings are being imported for processing or manufacturing purposes. In this document, we are proposing to allow the importation from Canada of screenings from other kinds of seeds if the screenings are consigned to a processing facility that is operating under a compliance agreement. Such processing facilities utilize screenings to produce animal feed, and the process used to produce the feed—usually an extrusion process in which the screenings are heated and pelletized—is sufficient to devitalize any live seed that might be present in the screenings, which reduces to an insignificant level any risk that the processed screenings would carry viable noxious weed seeds.

The compliance agreement would be a written agreement between a person engaged in the business of cleaning imported seed or processing screenings, the State in which the business operates, and APHIS. In the compliance agreement, the person would agree to comply with the applicable provisions of the regulations and any additional conditions included in the compliance agrement. With regard to the cleaning of seed, the agreement would eliminate the need for an APHIS inspector to be present to supervise the cleaning of seed and destruction of refuse; rather, an APHIS inspector would make spot checks to ensure that the conditions of the compliance agreement were being observed. With regard to the processing of screenings, the agreement would help ensure that the business uses processing methods that are adequate to devitalize any live seed that may be contained in the screenings.

The compliance agreement would provide that if an APHIS inspector found that the person who entered into the compliance agreement was violating the terms of the agreement, the APHIS inspector could cancel the compliance agreement, either orally or in writing. If the cancellation was oral, it would be confirmed in writing as promptly as possible. Any person whose compliance agreement had been canceled could appeal the decision to the Administrator, who would grant or deny the appeal, in writing, as soon as circumstances permitted. A hearing would be held if there was a conflict as to any material fact concerning the cancellation or the appeal.

While the proposed regulations would allow seed to be cleaned under APHIS supervision or under a compliance agreement, we would continue to require the seed to be retested for noxious weed content before it is allowed entry into the United States. In the proposed regulations, we would allow representative samples of the seed to be examined by a registered seed technologist or an official seed analyst, who would be eligible to issue reports of noxious weed examinations for cleaned seed. Allowing qualified personnel outside of USDA to conduct such examinations would facilitate the release of cleaned seed and reduce the workload on USDA seed analysts while ensuring that a thorough examination of the cleaned seed is conducted.

Coated or Pelleted Seed

We are proposing to prohibit the importation of coated or pelleted seed that does not meet certain conditions. For Canadian-origin coated or pelleted seed, proposed § 361.7(b) would require that the seed be analyzed in Canada prior to being coated or pelleted; the findings of that analysis with regard to the identity and noxious weed content of the seed would have to be recorded on the certificate of analysis required for Canadian-origin seed under proposed § 361.7. For coated or pelleted seed from countries other than Canada, proposed § 361.2(c) would require that the seed be accompanied by an officially drawn and sealed sample of the seed that was drawn before the seed was coated or pelleted.

Without an officially drawn sample or a certificate of analysis, coated or pelleted seed would not be eligible for importation because the coating would render the seed uninspectable, in that the identity of the seed could not be readily confirmed, the accuracy of the labeling could not be evaluated, and the noxious weed seed content of the seed could not be determined.

Recordkeeping

In § 361.9 of the proposed regulations, we would carry over the recordkeeping requirements of § 201.4 of the FSA regulations. Although the FSA regulations apply those requirements only to seeds in interstate commerce, we believe recordkeeping with regard to imported seed would be necessary to allow APHIS to trace the origin of seeds or screenings, if necessary, and to monitor the efficacy of noxious weed examinations and cleaning. We do not believe that the proposed recordkeeping requirements would place a burden on seed companies because such companies already keep such records for internal purposes and to comply with the interstate provisions of FSA regulations administered by the AMS. Therefore, we are proposing to require that each person importing agricultural seed or vegetable seed under this part would have to maintain a record, including copies of the declaration and labeling required under the regulations and a sample of seed, for each lot of seed imported. Except for the seed sample, which could be discarded 1 year after the entire lot represented by the sample had been disposed of by the person who imported the seed, the records would have to be maintained for 3 years following the importation. The required sample of vegetable seed and agricultural seed would have to be at least equal in weight to the sample size prescribed for noxious weed seed examination in table 1 of proposed § 361.4. An APHIS inspector would be allowed to inspect and copy the records during normal business hours. These proposed requirements are equivalent to those found in § 201.4 of the FSA regulations and would serve the same purpose.

Costs and Charges

Proposed § 361.10 relates to costs and charges that would apply in connection with the services of an APHIS inspector. It is the policy of APHIS that the services of an APHIS inspector during regularly assigned hours of duty and at the usual places of duty be furnished without cost to persons requiring inspection, unless a user fee is payable under 7 CFR part 354. Further, under the authority of the FSA, proposed § 361.10 also provides that any costs or charges incurred in connection with the supervision by an APHIS inspector of cleaning, labeling, or destruction of seed, screenings, or refuse under the proposed regulations would have to be

reimbursed by the owner or consignee of the seed or screenings.

Public Hearing

As required by 7 U.S.C. 1592(c), APHIS will host a public hearing to provide interested persons a full opportunity to present their views regarding this proposal. The hearing will be held on November 21, 1996, at the USDA Center at Riverside, 4700 River Road, Riverdale, MD.

A representative of APHIS will preside at the public hearing. Any interested person may appear and be heard in person, by attorney, or by other representative. Persons who wish to speak at the public hearing will be asked to sign in, listing their names and organizations.

The public hearing will begin at 9:00 a.m. local time and is scheduled to end at 12:00 noon local time. However, the hearing may be terminated at any time after it begins if all persons desiring to speak have been heard. We ask that anyone who reads a statement provide two copies to the presiding officer at the hearing. If the number of speakers at the hearing warrants it, the presiding officer may limit the time for each presentation so that everyone wishing to speak has the opportunity.

The purpose of the hearing is to give interested persons an opportunity for oral presentations of data, views, and arguments. Questions about the content of the proposed rule may be part of the commenters' oral presentations. However, neither the presiding officer nor any other representative of APHIS will respond to comments at the hearing, except to clarify or explain provisions of the proposed rule.

Executive Order 12866 and Regulatory Flexibility Act

This proposed rule has been reviewed under Executive Order 12866. The rule has been determined to be not significant for purposes of Executive Order 12866 and, therefore, has not been reviewed by the Office of Management and Budget.

We are proposing to amend the ''Imported Seed'' regulations by moving the regulations to a different chapter in the Code of Federal Regulations, establishing a seed analysis program with Canada, and allowing U.S. companies that import seed for cleaning or screenings for processing to enter into compliance agreements with APHIS. With these proposed changes, the regulations would reflect recent amendments to the FSA and the transfer of responsibility for the import provisions of the act from the AMS to APHIS, eliminate the need for sampling shipments of Canadian-origin seed at the border, and allow certain seed importers to clean seed without the direct supervision of an APHIS inspector.

No economic impact is expected to result from shifting the regulations to a different chapter in the Code of Federal Regulations. However, the elimination of the requirement that shipments of Canadian-origin seed be sampled at the border is expected to result in savings to APHIS. Currently, at the Canadian border, APHIS relies on the U.S. Customs Service to draw samples from shipment of imported seed. Customs Service inspectors mail the seed samples to APHIS' Seed Examination Facility (SEF) in Beltsville, MD, for testing. The proposed rule would require that all shipments of Canadian-origin agricultural or vegetable seed be accompanied by a certificate of analysis issued by Agriculture and Agri-Food Canada or by a private seed laboratory accredited by Agriculture and Agri-Food Canada; the certificate of analysis would preclude the need for sampling and testing those shipments of Canadian-origin seed. The certificate of analysis would confirm the seed shipment meets the noxious weed tolerances and labeling requirements of the FSA and the regulations. Under the provisions of the proposed rule, the cost of the analysis and subsequent certification would be borne by the owner or exporter of the seed, so there would be a reduction in the sampling and testing costs currently borne by APHIS. It is estimated that APHIS would save over $103,000 annually in salary and related expenditures associated with the testing of Canadian-origin seed.

Currently, Canada's agricultural regulations allow seed from the United States to move into the commerce of Canada without testing if a certificate of analysis from an approved American laboratory accompanies the seed. The provisions of this proposed rule would allow for a reciprocal seed import certification program with Canada. This reciprocity is important in facilitating trade, given the volume of seed trade between the two countries. Imports of field and garden seeds from Canada represent 80 percent of total U.S. seed imports; from 1992 to 1994, imports of the regulated agricultural and vegetable seeds from Canada into the United States averaged 107,270 tons per year, with an average value of $63.059 million. From fiscal year 1989 to fiscal year 1993, the number of seed shipments sampled increased from 2,451 to 3,615 shipments per year, an increase of 47.5 percent; over the same period, SEF tested an average of 2,907 seed samples per year. In fiscal years 1994 and 1995, approximately 5,000 Canadian seed samples were tested. Only 3 percent of Canadian seed shipments were refused admission for noxious weed content.

The SEF botanist currently spends approximately 90 percent of his time in testing Canadian-origin seed for noxious weed seeds, while his assistant spends about 50 percent of his time on this task. For both the botanist and his assistant, the time spent testing Canadian seed reduces the amount of time they can devote to seed identification and other responsibilities. In terms of salaries and benefits, the costs associated with the SEF's testing of Canadian seed are estimated to exceed $100,000 annually. Our proposal to require that Canadian-origin seed be certified prior to entry into the United States would eliminate the need for the routine testing of Canadian-origin seed and thus eliminate the costs associated with that testing. The time and costs previously spent on testing Canadian seed would then be shifted into the SEF's other areas of responsibility.

The proposed rule would also realize savings in salary for the time spent by APHIS or State inspectors supervising the cleaning of seed lots refused admission due to noxious weed seed content. In fiscal year 1995, 61 seed shipments were refused entry due to noxious weed seed content above tolerances. An inspector spends an average of about 4 hours in supervising the cleaning of each refused shipment. The savings in the inspector's supervision time in this activity is estimated as $1,262.

This proposed rule would also allow companies that import uncleaned seed for reconditioning and resale to enter into a compliance agreement with APHIS, which would likely yield a savings to APHIS in inspection time since only periodic inspections of these companies would be necessary to ensure compliance with the conditions of the agreement. Currently, APHIS employs a contractor who is responsible for supervising the cleaning of the adulterated seed imported by two companies in Idaho. In fiscal year 1995, 48 lots of seed imported by those two companies required cleaning supervision; a company operating under a compliance agreement would not require supervision for every lot of seed imported for cleaning. Thus, we expect there would be an estimated $1,664 annual savings in salary and benefits as a result of seed-cleaning companies entering into compliance agreements with APHIS.

In total, we expect an estimated annual reduction of approximately $103,000 in the costs associated with the sampling and testing of Canadian origin seed and the supervision of seed cleaning.

The Regulatory Flexibility Act requires that the Agency specifically consider the impact of proposed regulations on small U.S. businesses. The proposed rule is expected to impact exporters of Canadian-origin seed, the majority of which—over 95 percent—are Canadian businesses. The cost of obtaining a certificate of analysis from a Canadian government or private laboratory is estimated to range from $13.00 to $58.00 per lot, depending on the type of seed to be analyzed, or an average of $35 per lot. The cost is the same regardless of the size of the lot, which can range from 50 to 50,000 pounds. Based upon fiscal year 1995 figures, there would be approximately 6,000 seed shipments per year from Canada that would require certification as a condition of importation into the United States. For the majority of shipments, the cost of the certification would not represent an additional expense because much of the seed likely would have been tested anyway to meet the requirements of the exporting company's contracts with its importing customers. Nevertheless, the cost of a certificate is small in comparison to the average value of a seed shipment (which is typically worth thousands of dollars) and should not, therefore, impose a significant economic burden on Canadian seed exporters, large or small. For this reason, any cost that is passed on to U.S. buyers of Canadian seed is likewise estimated to be small.

Less than 2 percent of Canadian seed imports are transacted by individual farms. Individual farms located near the U.S.-Canadian border typically import small amounts of Canadian seed to be used directly on farms. While the exact number of these entities is not known, it is expected that the impact to these individuals would be small because seed sold in such small quantities is, in almost all cases, already analyzed and certified prior to its entry into the United States.

Under these circumstances, the Administrator of the Animal and Plant Health Inspection Service has determined that this action would not have a significant economic impact on a substantial number of small entities.

Executive Order 12988

This proposed rule has been reviewed under Executive Order 12988, Civil Justice Reform. If this proposed rule is adopted: (1) All State and local laws and regulations that are inconsistent with this rule will be preempted; (2) no retroactive effect will be given to this rule; and (3) administrative proceedings will not be required before parties may file suit in court challenging this rule.

Paperwork Reduction Act

In accordance with section 3507(d) of the Paperwork Reduction Act of 1995 (44 U.S.C. 3501 et seq.), the information collection or recordkeeping requirements included in this proposed rule have been submitted for approval to the Office of Management and Budget (OMB). Please send written comments to the Office of Information and Regulatory Affairs, OMB, Attention: Desk Officer for APHIS, Washington, DC 20503. Please state that your comments refer to Docket No. 93–126–4. Please send a copy of your comments to: (1) Docket No. 93–126–4, Regulatory Analysis and Development, PPD, APHIS, suite 3C03, 4700 River Road Unit 118, Riverdale, MD 20737–1238, and (2) Clearance Officer, OIRM, USDA, room 404–W, 14th Street and Independence Avenue SW., Washington, DC 20250. A comment to OMB is best assured of having its full effect if OMB receives it within 30 days of publication of this proposed rule.

In this document, we are proposing to amend the ''Imported Seed'' regulations by moving the regulations to a different chapter in the Code of Federal Regulations; establishing a seed analysis program with Canada; and allowing U.S. companies that import seed for cleaning or screenings for processing to enter into compliance agreements with APHIS. These proposed changes would bring the imported seed regulations into agreement with the amended FSA, eliminate the need for sampling shipments of Canadian-origin seed at the border, and allow certain seed importers to clean seed without the direct supervision of an APHIS inspector.

We are seeking OMB approval to use the following documents in connection with the information collection activities that would occur under the proposed regulations described in this document:

Seed Analysis Certificate (PPQ–925): Canadian-grown seed shipments imported into the United States would have to be accompanied by a certificate of analysis issued by Agriculture and Agri-Food Canada. The certificate would confirm that the seed in each lot had been analyzed for noxious weed seed content at the issuing laboratory and, if the seed was being imported for seeding (planting) purposes, the certificate would confirm that the seed met the noxious weed seed tolerances of proposed § 361.6. If the seed was being imported for cleaning, the certificate would have to name the kinds of noxious weed seeds that were to be removed from the lot of seed. Under the proposed program, we would also accept certificates that had been issued by an accredited laboratory designated by the Canadian agriculture minister pursuant to Section 14 of the Canadian Agricultural Products Act.

Compliance Agreement (PPQ 519): We would allow any person engaged in the business of cleaning imported agricultural or vegetable seed to enter into a compliance agreement with APHIS, which would remove the need for the full-time presence of an APHIS inspector at the cleaning facility. In addition, we would require that any person engaged in the business of or processing certain screenings from Canada enter into a compliance agreement with APHIS. These agreements would be signed by the person engaged in the business, the State in which the business operates, and APHIS. The agreement would specify various safeguards necessary to ensure safe destruction of noxious weed seeds and plant pests; require resampling of cleaned seed to determine enterability; and state that APHIS inspectors must be allowed access to the facility to monitor compliance with our regulations.

Written Appeal of Cancellation or Denial: Any person whose compliance agreement has been canceled or whose request to enter into a compliance agreement has been denied may appeal the decision, in writing, within 10 days after receiving written notification of the cancellation or denial.

Recordkeeping: We believe recordkeeping with regard to imported seed would be necessary to allow APHIS to trace the origin of seeds or screenings, if necessary, and to monitor the efficacy of noxious weed examinations and cleaning. Seed importers already keep such records for internal purposes and to comply with the interstate provisions of FSA regulations administered by AMS. Therefore, we are proposing to require that each person importing agricultural seed or vegetable seed under the proposed regulations would have to maintain a record, including copies of the declaration and labeling required under the regulations and a sample of seed, for each lot of seed imported. Except for the seed sample, which could be discarded 1 year after the entire lot represented by the sample had been disposed of by the person who imported the seed, the records would have to be

maintained for 3 years following the importation.

The purpose of this notice is to solicit comments from the public (as well as affected agencies) concerning our new information collection. We need this outside input to help us accomplish the following:

Evaluate whether the information collection is necessary for the proper performance of our agency's functions, including whether the information will have practical utility;

Evaluate the accuracy of our estimate of the burden of the information collection, including the validity of the methodology and assumptions used;

Enhance the quality, utility, and clarity of the information to be collected; and

Minimize the burden of the information collection on those who are to respond, (such as through the use of appropriate automated, electronic, mechanical, or other technological collection techniques or other forms of information technology, e.g., permitting electronic submission of responses).

Estimate of burden: Public reporting burden for this collection of information is estimated to average .0333 hours per response.

Respondents: Seed importers, seed exporters, operators of facilities for cleaning seed or processing screenings.

Estimated number of respondents: 195.

Estimated number of responses per respondent: 2,094.

Estimated total annual burden on respondents: 6,913.

Copies of this information collection can be obtained from: Clearance Officer, OIRM, USDA, room 404–W, 14th Street and Independence Avenue SW., Washington, DC 20250.

Regulatory Reform

This action is part of the President's Regulatory Reform Initiative, which, among other things, directs agencies to remove obsolete and unnecessary regulations and to find less burdensome ways to achieve regulatory goals.

List of Subjects

7 CFR Part 201

Advertising, Agricultural commodities, Imports, Labeling, Reporting and recordkeeping requirements, Seeds, Vegetables.

7 CFR Part 361

Agricultural commodities, Imports, Labeling, Quarantine, Reporting and recordkeeping requirements, Seeds, Vegetables, Weeds.

Accordingly, title 7, chapters I and III, of the Code of Federal Regulations would be amended as follows:

PART 201—FEDERAL SEED ACT REGULATIONS

1. The authority citation for part 201 would continue to read as follows:

Authority: 7 U.S.C. 1592.

§ 201.38 [Amended]

2. Section 201.38 would be amended by removing the words ''§§ 201.208 and 201.209'' and adding the words ''§ 361.4 of this title'' in their place.

§§ 201.101 through 201.230 [Removed]

3. In 7 CFR part 201, §§ 201.101 through 201.230 would be removed.

4. A new 7 CFR part 361 would be added to read as follows:

PART 361—IMPORTATION OF SEED AND SCREENINGS UNDER THE FEDERAL SEED ACT

Sec.

361.1 Definitions.
361.2 General restrictions on the importation of seed and screenings.
361.3 Declarations and labeling.
361.4 Inspection at the port of first arrival.
361.5 Sampling of seeds.
361.6 Noxious weed seeds.
361.7 Special provisions for Canadian-origin seed and screenings.
361.8 Cleaning of imported seed and processing of certain Canadian-origin screenings.
361.9 Recordkeeping.
361.10 Costs and charges.

Authority: 7 U.S.C. 1581–1610; 7 CFR 2.22, 2.80, and 371.2(c).

§ 361.1 Definitions.

Terms used in the singular form in this part shall be construed as the plural, and vice versa, as the case may demand. The following terms, when used in this part, shall be construed, respectively, to mean:

Administrator. The Administrator of the Animal and Plant Health Inspection Service, U.S. Department of Agriculture, or any other individual to whom the Administrator delegates authority to act in his or her stead.

Agricultural seed. The following kinds and varieties of grass, forage, and field crop seed that are used for seeding purposes in the United States:

Agrotricum—x *Agrotriticum* Ciferri and Giacom.

Alfalfa—*Medicago sativa* L.

Alfilaria—*Erodium cicutarium* (L.) L'Her.

Alyceclover—*Alysicarpus vaginalis* (L.) DC.

Bahiagrass—*Paspalum notatum* Fluegge

Barley—*Hordeum vulgare* L.

Barrelclover—*Medicago truncatula* Gaertn.

Bean, adzuki—*Vigna angularis* (Willd.) Ohwi and Ohashi

Bean, field—*Phaseolus vulgaris* L.

Bean, mung—*Vigna radiata* (L.) Wilczek

Beet, field—*Beta vulgaris* L. subsp. *vulgaris*

Beet, sugar—*Beta vulgaris* L. subsp. *vulgaris*

Beggarweed, Florida—*Desmodium tortuosum* (Sw.) DC.

Bentgrass, colonial—*Agrostis capillaris* L.

Bentgrass, creeping—*Agrostis stolonifera* L. var. *palustris* (Huds.) Farw.

Bentgrass, velvet—*Agrostis canina* L.

Bermudagrass—*Cynodon dactylon* (L.) Pers. var. *dactylon*

Bermudagrass, giant—*Cynodon dactylon* (L.) Pers. var. *aridus* Harlan and de Wet

Bluegrass, annual—*Poa annua* L.

Bluegrass, bulbous—*Poa bulbosa* L.

Bluegrass, Canada—*Poa compressa* L.

Bluegrass, glaucantha—*Poa glauca* Vahl

Bluegrass, Kentucky—*Poa pratensis* L.

Bluegrass, Nevada—*Poa secunda* J.S. Presl

Bluegrass, rough—*Poa trivialis* L.

Bluegrass, Texas—*Poa arachnifera* Torr.

Bluegrass, wood—*Poa nemoralis* L.

Bluejoint—*Calamagrostis canadensis* (Michx.) P. Beauv.

Bluestem, big—*Andropogon gerardii* Vitm. var. gerardii

Bluestem, little—*Schizachyrium scoparium* (Michx.) Nash

Bluestem, sand—*Andropogon hallii* Hack.

Bluestem, yellow—*Bothriochloa ischaemum* (L.) Keng.

Bottlebrush-squirreltail—*Elymus elymoides* (Raf.) Swezey

Brome, field—*Bromus arvensis* L.

Brome, meadow—*Bromus biebersteinii* Roem. and Schult.

Brome, mountain—*Bromus marginatus* Steud.

Brome, smooth—*Bromus inermis* Leyss.

Broomcorn—*Sorghum bicolor* (L.) Moench

Buckwheat—*Fagopyrum esculentum* Moench

Buffalograss—*Buchloe dactyloides* (Nutt.) Engelm.

Buffelgrass—*Cenchrus ciliaris* L.

Burclover, California—*Medicago polymorpha* L.

Burclover, spotted—*Medicago arabica* (L.) Huds.

Burnet, little—*Sanguisorba minor* Scop.

Buttonclover—*Medicago orbicularis* (L.) Bartal.
Canarygrass—*Phalaris canariensis* L.
Canarygrass, reed—*Phalaris arundinacea* L.
Carpetgrass—*Axonopus fissifolius* (Raddi) Kuhlm.
Castorbean—*Ricinus communis* L.
Chess, soft—*Bromus hordeaceus* L.
Chickpea—*Cicer arietinum* L.
Clover, alsike—*Trifolium hybridum* L.
Clover, arrowleaf—*Trifolium vesiculosum* Savi
Clover, berseem—*Trifolium alexandrinum* L.
Clover, cluster—*Trifolium glomeratum* L.
Clover, crimson—*Trifolium incarnatum* L.
Clover, Kenya—*Trifolium semipilosum* Fresen.
Clover, ladino—*Trifolium repens* L.
Clover, lappa—*Trifolium lappaceum* L.
Clover, large hop—*Trifolium campestre* Schreb.
Clover, Persian—*Trifolium resupinatum* L.
Clover, red or
Red clover, mammoth—*Trifolium pratense* L.
Red clover, medium—*Trifolium pratense* L.
Clover, rose—*Trifolium hirtum* All.
Clover, small hop or suckling—*Trifolium dubium* Sibth.
Clover, strawberry—*Trifolium fragiferum* L.
Clover, sub or subterranean—*Trifolium subterraneum* L.
Clover, white—*Trifolium repens* L. (also see Clover, ladino)
Clover—(also see Alyceclover, Burclover, Buttonclover, Sourclover, Sweetclover)
Corn, field—*Zea mays* L.
Corn, pop—*Zea mays* L.
Cotton—*Gossypium* spp.
Cowpea—*Vigna unguiculata* (L.) Walp. subsp. unguiculata
Crambe—*Crambe abyssinica* R.E. Fries
Crested dogtail—*Cynosurus cristatus* L.
Crotalaria, lance—*Crotalaria lanceolata* E. Mey.
Crotalaria, showy—*Crotalaria spectabilis* Roth
Crotalaria, slenderleaf—*Crotalaria brevidens* Benth. var. *intermedia* (Kotschy) Polh.
Crotalaria, striped or smooth—*Crotalaria pallida* Ait.
Crotalaria, sunn—*Crotalaria juncea* L.
Crownvetch—*Coronilla varia* L.
Dallisgrass—*Paspalum dilatatum* Poir.
Dichondra—*Dichondra repens* Forst. and Forst. f.
Dropseed, sand—*Sporobolus cryptandrus* (Torr.) A. Gray
Emmer—*Triticum dicoccon* Schrank
Fescue, chewings—*Festuca rubra* L. subsp. *commutata* Gaud.
Fescue, hair—*Festuca tenuifolia* Sibth.
Fescue, hard—*Festuca brevipila* Tracey
Fescue, meadow—*Festuca pratensis* Huds.
Fescue, red—*Festuca rubra* L. subsp. *rubra*
Fescue, sheep—*Festuca ovina* L. var. *ovina*
Fescue, tall—*Festuca arundinacea* Schreb.
Flax—*Linum usitatissimum* L.
Galletagrass—*Hilaria jamesii* (Torr.) Benth.
Grama, blue—*Bouteloua gracilis* (Kunth) Steud.
Grama, side-oats—*Bouteloua curtipendula* (Michx.) Torr.
Guar—*Cyamopsis tetragonoloba* (L.) Taub.
Guineagrass—*Panicum maximum* Jacq. var. *maximum*
Hardinggrass—*Phalaris stenoptera* Hack.
Hemp—*Cannabis sativa* L.
Indiangrass, yellow—*Sorghastrum nutans* (L.) Nash
Indigo, hairy—*Indigofera hirsuta* L.
Japanese lawngrass—*Zoysia japonica* Steud.
Johnsongrass—*Sorghum halepense* (L.) Pers.
Kenaf—*Hibiscus cannabinus* L.
Kochia, forage—*Kochia prostrata* (L.) Schrad.
Kudzu—*Pueraria montana* (Lour.) Merr. var. *lobata* (Willd.) Maesen and S. Almeida
Lentil—*Lens culinaris* Medik.
Lespedeza, Korean—*Kummerowia stipulacea* (Maxim.) Makino
Lespedeza, sericea or Chinese—*Lespedeza cuneata* (Dum.-Cours.) G. Don
Lespedeza, Siberian—*Lespedeza juncea* (L. f.) Pers.
Lespedeza, striate—*Kummerowia striata* (Thunb.) Schindler
Lovegrass, sand—*Eragrostis trichodes* (Nutt.) Wood
Lovegrass, weeping—*Eragrostis curvula* (Schrad.) Nees
Lupine, blue—*Lupinus angustifolius* L.
Lupine, white—*Lupinus albus* L.
Lupine, yellow—*Lupinus luteus* L.
Manilagrass—*Zoysia matrella* (L.) Merr.
Meadow foxtail—*Alopecurus pratensis* L.
Medic, black—*Medicago lupulina* L.
Milkvetch or cicer milkvetch—*Astragalus cicer* L.
Millet, browntop—*Brachiaria ramosa* (L.) Stapf
Millet, foxtail—*Setaria italica* (L.) Beauv.
Millet, Japanese—*Echinochloa frumentacea* Link
Millet, pearl—*Pennisetum glaucum* (L.) R. Br.
Millet, proso—*Panicum miliaceum* L.
Molassesgrass—*Melinis minutiflora* Beauv.
Mustard, black—*Brassica nigra* (L.) Koch
Mustard, India—*Brassica juncea* (L.) Czernj. and Coss.
Mustard, white—*Sinapis alba* L.
Napiergrass—*Pennisetum purpureum* Schumach.
Needlegrass, green—*Stipa viridula* Trin.
Oat—*Avena byzantina* C. Koch, *A. sativa* L., *A. nuda* L.
Oatgrass, tall—*Arrhenatherum elatius* (L.) J.S. Presl and K.B. Presl
Orchardgrass—*Dactylis glomerata* L.
Panicgrass, blue—*Panicum antidotale* Retz.
Panicgrass, green—*Panicum maximum* Jacq. var. *trichoglume* Robyns
Pea, field—*Pisum sativum* L.
Peanut—*Arachis hypogaea* L.
Poa trivialis—(see Bluegrass, rough)
Rape, annual—*Brassica napus* L. var. *annua* Koch
Rape, bird—*Brassica rapa* L. subsp. *rapa*
Rape, turnip—*Brassica rapa* L. subsp. *silvestris* (Lam.) Janchen
Rape, winter—*Brassica napus* L. var. *biennis* (Schubl. and Mart.) Reichb.
Redtop—*Agrostis gigantea* Roth
Rescuegrass—*Bromus catharticus* Vahl
Rhodesgrass—*Chloris gayana* Kunth
Rice—*Oryza sativa* L.
Ricegrass, Indian—*Oryzopsis hymenoides* (Roem. and Schult.) Ricker
Roughpea—*Lathyrus hirsutus* L.
Rye—*Secale cereale* L.
Rye, mountain—*Secale strictum* (K.B. Presl) K.B. Presl subsp. *strictum*
Ryegrass, annual or Italian—*Lolium multiflorum* Lam.
Ryegrass, intermediate—*Lolium* x *hybridum* Hausskn.
Ryegrass, perennial—*Lolium perenne* L.
Ryegrass, Wimmera—*Lolium rigidum* Gaud.
Safflower—*Carthamus tinctorius* L.
Sagewort, Louisiana—*Artemisia ludoviciana* Nutt.
Sainfoin—*Onobrychis viciifolia* Scop.
Saltbush, fourwing—*Atriplex canescens* (Pursh) Nutt.
Sesame—*Sesamum indicum* L.
Sesbania—*Sesbania exaltata* (Raf.) A.W. Hill
Smilo—*Piptatherum miliaceum* (L.) Coss

Sorghum—*Sorghum bicolor* (L.) Moench

Sorghum almum—*Sorghum* x *almum* L. Parodi

Sorghum-sudangrass—*Sorghum* x *drummondii* (Steud.) Millsp. and Chase

Sorgrass—*Rhizomatous* derivatives of a johnsongrass x sorghum cross or a johnsongrass x sudangrass cross

Southernpea—(See Cowpea)

Sourclover—*Melilotus indicus* (L.) All.

Soybean—*Glycine max* (L.) Merr.

Spelt—*Triticum spelta* L.

Sudangrass—*Sorghum* x *drummondii* (Steud.) Millsp. and Chase

Sunflower—*Helianthus annuus* L.

Sweetclover, white—*Melilotus albus* Medik.

Sweetclover, yellow—*Melilotus officinalis* Lam.

Sweet vernalgrass—*Anthoxanthum odoratum* L.

Sweetvetch, northern—*Hedysarum boreale* Nutt.

Switchgrass—*Panicum virgatum* L.

Timothy—*Phleum pratense* L.

Timothy, turf—*Phleum bertolonii* DC.

Tobacco—*Nicotiana tabacum* L.

Trefoil, big—*Lotus uliginosus* Schk.

Trefoil, birdsfoot—*Lotus corniculatus* L.

Triticale—x *Triticosecale* Wittm. (Secale x Triticum)

Vaseygrass—*Paspalum urvillei* Steud.

Veldtgrass—*Ehrharta calycina* J.E. Smith

Velvetbean—*Mucuna pruriens* (L.) DC. var. *utilis* (Wight) Burck

Velvetgrass—*Holcus lanatus* L.

Vetch, common—*Vicia sativa* L. subsp. *sativa*

Vetch, hairy—*Vicia villosa* Roth subsp. *villosa*

Vetch, Hungarian—*Vicia pannonica* Crantz

Vetch, monantha—*Vicia articulata* Hornem.

Vetch, narrowleaf or blackpod—*Vicia sativa* L. subsp. *nigra* (L.) Ehrh.

Vetch, purple—*Vicia benghalensis* L.

Vetch, woollypod or winter—*Vicia villosa* Roth subsp. *varia* (Host) Corb.

Wheat, common—*Triticum aestivum* L.

Wheat, club—*Triticum compactum* Host

Wheat, durum—*Triticum durum* Desf.

Wheat, Polish—*Triticum polonicum* L.

Wheat, poulard—*Triticum turgidum* L.

Wheat x Agrotricum—*Triticum* x *Agrotriticum*

Wheatgrass, beardless—*Pseudoroegneria spicata* (Pursh) A. Love

Wheatgrass, crested or fairway crested—*Agropyron cristatum* (L.) Gaertn.

Wheatgrass, crested or standard crested—*Agropyron desertorum* (Link) Schult.

Wheatgrass, intermediate—*Elytrigia intermedia* (Host) Nevski subsp. *intermedia*

Wheatgrass, pubescent—*Elytrigia intermedia* (Host) Nevski subsp. *intermedia*

Wheatgrass, Siberian—*Agropyron fragile* (Roth) Candargy subsp. *sibiricum* (Willd.) Meld.

Wheatgrass, slender—*Elymus trachycaulus* (Link) Shinn.

Wheatgrass, streambank—*Elymus lanceolatus* (Scribn. and J.G. Smith) Gould subsp. *lanceolatus*

Wheatgrass, tall—*Elytrigia elongata* (Host) Nevski

Wheatgrass, western—*Pascopyrum smithii* (Rydb.) A. Love

Wildrye, basin—*Leymus cinereus* (Scribn. and Merr.) A. Love

Wildrye, Canada—*Elymus canadensis* L.

Wildrye, Russian—*Psathyrostachys juncea* (Fisch.) Nevski

Zoysia japonica—(see Japanese lawngrass)

Zoysia matrella—(see Manilagrass)

Animal and Plant Health Inspection Service (APHIS). The Animal and Plant Health Inspection Service of the U.S. Department of Agriculture.

APHIS inspector. Any employee of the Animal and Plant Health Inspection Service or any other individual authorized by the Administrator to enforce this part.

Coated Seed. Any seed unit covered with any substance that changes the size, shape, or weight of the original seed. Seeds coated with ingredients such as, but not limited to, rhizobia, dyes, and pesticides are excluded.

Declaration. A written statement of a grower, shipper, processor, dealer, or importer giving for any lot of seed the kind, variety, type, origin, or the use for which the seed is intended.

Hybrid. When applied to kinds or varieties of seed means the first generation seed of a cross produced by controlling the pollination and by combining two or more inbred lines; one inbred or a single cross with an open-pollinated variety; two selected clones, seed lines, varieties, or species. ''Controlling the pollination'' means to use a method of hybridization that will produce pure seed that is at least 75 percent hybrid seed. Hybrid designations shall be treated as variety names.

Import. To bring into the territorial limits of the United States.

Kind. One or more related species or subspecies that singly or collectively is known by one common name, e.g., soybean, flax, or carrot.

Lot of seed. A definite quantity of seed identified by a lot number, every portion or bag of which is uniform, within permitted tolerances, for the factors that appear in the labeling.

Mixture. Seeds consisting of more than one kind or variety, each present in excess of 5 percent of the whole.

Official seed analyst. A registered member of the Association of Official Seed Analysts.

Pelleted seed. Any seed unit covered with a substance that changes the size, shape, or weight of the original seed in order to improve the plantability or singulation of the seed.

Person. Any individual, partnership, corporation, company, society, association, receiver, trustee, or other legal entity or organized group.

Port of first arrival. The land area (such as a seaport, airport, or land border station) where a person, or a land, water, or air vehicle, first arrives after entering the United States, and where inspection of articles is carried out by APHIS inspectors.

Registered seed technologist. A registered member of the Society of Commercial Seed Technologists.

Screenings. Chaff, sterile florets, immature seed, weed seed, inert matter, and any other materials removed in any way from any seeds in any kind of cleaning or processing and which contains less than 25 percent of live agricultural or vegetable seeds.

State. Any State, the District of Columbia, American Samoa, Guam, the Northern Mariana Islands, Puerto Rico, the Virgin Islands of the United States, and any other territory or possession of the United States.

United States. All of the States.

Variety. A subdivision of a kind which is characterized by growth, plant, fruit, seed, or other characteristics by which it can be differentiated from other sorts of the same kind.

Vegetable seed. The seed of the following kinds and varieties that are or may be grown in gardens or on truck farms and are or may be generally known and sold under the name of vegetable seed:

Artichoke—*Cynara cardunculus* L. subsp. *cardunculus*

Asparagus—*Asparagus officinalis* Baker

Asparagusbean or yard-long bean—*Vigna unguiculata* (L.) Walp. subsp. *sesquipedalis* (L.) Verdc.

Bean, garden—*Phaseolus vulgaris* L.

Bean, lima—*Phaseolus lunatus* L.

Bean, runner or scarlet runner—*Phaseolus coccineus* L.

Beet—*Beta vulgaris* L. subsp. *vulgaris*

Broadbean—*Vicia faba* L.

Broccoli—*Brassica oleracea* L. var. *botrytis* L.

Brussels sprouts—*Brassica oleracea* L. var. *gemmifera* DC.
Burdock, great—*Arctium lappa* L.
Cabbage—*Brassica oleracea* L. var. *capitata* L.
Cabbage, Chinese—*Brassica rapa* L. subsp. *pekinensis* (Lour.) Hanelt
Cabbage, tronchuda—*Brassica oleracea* L. var. *costata* DC.
Cantaloupe—(see Melon)
Cardoon—*Cynara cardunculus* L. subsp. *cardunculus*
Carrot—*Daucus carota* L. subsp. *sativus* (Hoffm.) Arcang.
Cauliflower—*Brassica oleracea* L. var. *botrytis* L.
Celeriac—*Apium graveolens* L. var. *rapaceum* (Mill.) Gaud.
Celery—*Apium graveolens* L. var. *dulce* (Mill.) Pers.
Chard, Swiss—*Beta vulgaris* L. subsp. *cicla* (L.) Koch
Chicory—*Cichorium intybus* L.
Chives—*Allium schoenoprasum* L.
Citron—*Citrullus lanatus* (Thunb.) Matsum. and Nakai var. *citroides* (Bailey) Mansf.
Collards—*Brassica oleracea* L. var. *acephala* DC.
Corn, sweet—*Zea mays* L.
Cornsalad—*Valerianella locusta* (L.) Laterrade
Cowpea—*Vigna unguiculata* (L.) Walp. subsp. *unguiculata*
Cress, garden—*Lepidium sativum* L.
Cress, upland—*Barbarea verna* (Mill.) Asch.
Cress, water—*Rorippa nasturtium-aquaticum* (L.) Hayek
Cucumber—*Cucumis sativus* L.
Dandelion—*Taraxacum officinale* Wigg.
Dill—*Anethum graveolens* L.
Eggplant—*Solanum melongena* L.
Endive—*Cichorium endivia* L.
Gherkin, West India—*Cucumis anguria* L.
Kale—*Brassica oleracea* L. var. *acephala* DC.
Kale, Chinese—*Brassica oleracea* L. var. *alboglabra* (Bailey) Musil
Kale, Siberian—*Brassica napus* L. var. *pabularia* (DC.) Reichb.
Kohlrabi—*Brassica oleracea* L. var. *gongylodes* L.
Leek—*Allium porrum* L.
Lettuce—*Lactuca sativa* L.
Melon—*Cucumis melo* L.
Muskmelon—(see Melon).
Mustard, India—*Brassica juncea* (L.) Czernj. and Coss.
Mustard, spinach—*Brassica perviridis* (Bailey) Bailey
Okra—*Abelmoschus esculentus* (L.) Moench
Onion—*Allium cepa* L.
Onion, Welsh—*Allium fistulosum* L.
Pak-choi—*Brassica rapa* L. subsp. *chinensis* (L.) Hanelt
Parsley—*Petroselinum crispum* (Mill.) A.W. Hill
Parsnip—*Pastinaca sativa* L.
Pea—*Pisum sativum* L.
Pepper—*Capsicum* spp.
Pe-tsai—(see Chinese cabbage).
Pumpkin—*Cucurbita pepo* L., *C. moschata* (Duchesne) Poiret, and *C. maxima* Duchesne
Radish—*Raphanus sativus* L.
Rhubarb—*Rheum rhabarbarum* L.
Rutabaga—*Brassica napus* L. var. *napobrassica* (L.) Reichb.
Sage—*Salvia officinalis* L.
Salsify—*Tragopogon porrifolius* L.
Savory, summer—*Satureja hortensis* L.
Sorrel—*Rumex acetosa* L.
Southernpea—(see Cowpea).
Soybean—*Glycine max* (L.) Merr.
Spinach—*Spinacia oleracea* L.
Spinach, New Zealand—*Tetragonia tetragonioides* (Pall.) Ktze.
Squash—*Cucurbita pepo* L., *C. moschata* (Duchesne) Poiret, and *C. maxima* Duchesne
Tomato—*Lycopersicon esculentum* Mill.
Tomato, husk—*Physalis pubescens* L.
Turnip—*Brassica rapa* L. subsp. *rapa*
Watermelon—*Citrullus lanatus* (Thunb.) Matsum. and Nakai var. *lanatus*

§ 361.2 General restrictions on the importation of seed and screenings.

(a) No person shall import any agricultural seed, vegetable seed, or screenings into the United States unless the importation is in compliance with this part.

(b) Any agricultural seed, vegetable seed, or screenings imported into the United States not in compliance with this part shall be subject to exportation, destruction, disposal, or any remedial measures that the Administrator determines are necessary to prevent the dissemination into the United States of noxious weeds.

(c) Except as provided in § 361.7(b), coated or pelleted seed may enter the United States only if each lot of seed is accompanied by an officially drawn and sealed sample of seed drawn from the lot before the seed was coated or pelleted. The sample must be drawn in a manner consistent with that described in § 361.5 of this part.

(d) Except as provided in §§ 361.4(a)(3) and 361.7(c), screenings of all agricultural seed and vegetable seed are prohibited entry into the United States.

§ 361.3 Declarations and labeling.

(a) All lots of agricultural seed, vegetable seed, and screenings offered for entry into the United States must be accompanied by a declaration from the importer of the seed or screenings. The declaration must state the kind, variety, and origin of each lot of seed or screenings and the use for which the seed or screenings are being imported.

(b) Each container of agricultural seed and vegetable seed offered for entry into the United States that is being imported for seeding (planting) purposes must be labeled to indicate the identification code or designation for the lot of seed; the name of each kind or kind and variety of agricultural seed or the name of each kind and variety of vegetable seed present in the lot in excess of 5 percent of the whole; and the designation ''hybrid'' when the lot contains hybrid seed. Kind and variety names used on the label shall conform to the kind and variety names used in the definitions of ''agricultural seed'' and ''vegetable seed'' in § 361.1. If any seed in the lot has been treated, each container must be further labeled, in type no smaller than 8 point, as follows:

(1) The label must indicate that the seed has been treated and provide the name of the substance or process used to treat the seed. Substance names used on the label shall be the commonly accepted coined, chemical (generic), or abbreviated chemical name.

(i) Commonly accepted coined names are not private trademarks and are, thus, free for general public use, and are commonly recognized as names of particular substances, e.g., thiram, captan, lindane, and dichlone.

(ii) Examples of commonly accepted chemical (generic) names are blue-stone, calcium carbonate, cuprous oxide, zinc hydroxide, hexachlorobenzene, and ethyl mercury acetate. The terms ''mercury'' or ''mercurial'' may be used in labeling all types of mercurials.

(iii) Examples of commonly accepted abbreviated chemical names are BHC (1, 2, 3, 4, 5, 6-Hexachlorocyclohexane) and DDT (dichloro diphenyl trichloroethane).

(2) If the seed has been treated with a mercurial or similarly toxic substance harmful to humans and vertebrate animals, the label must include a representation of a skull and crossbones and a statement indicating that the seed has been treated with poison. The skull and crossbones must be at least twice the size of the type used for the information provided on the label, and the poison warning statement must be written in red letters on a background of distinctly contrasting color. Mercurials and similarly toxic substances include the following:

Aldrin, technical
Demeton
Dieldrin

p-Dimethylaminobenzenediazo sodium sulfonate
Endrin
Ethion
Heptachlor
Mercurials, all types
Parathion
Phorate
Toxaphene
O-O-Diethyl-O-(isopropyl-4-methyl-6-pyrimidyl) thiophosphate
O, O-Diethyl-S-2-(ethylthio) ethyl phosphorodithioate

(3) If the seed has been treated with a substance other than one classified as a mercurial or similarly toxic substance under paragraph (b)(2) of this section, and the amount remaining with the seed is harmful to humans or other vertebrate animals, the label must indicate that the seed is not to be used for food, feed, or oil purposes. Any amount of any substance used to treat the seed that remains with the seed will be considered harmful when the seed is in containers of more than 4 ounces, except that the following substances will not be deemed harmful when present at a rate less than the number of parts per million (p/m) indicated:
Allethrin—2 p/m
Malathion—8 p/m
Methoxyclor—2 p/m
Piperonyl butoxide—20 p/m (8 p/m on oat and sorghum)
Pyrethrins—3 p/m (1 p/m on oat and sorghum)

(c) In the case of seed in bulk, the information required under paragraph (b) of this section shall appear in the invoice or other records accompanying and pertaining to such seed. If the seed is in containers and in quantities of 20,000 pounds or more, regardless of the number of lots included, the information required on each container under paragraph (b) of this section need not be shown on each container if each container has stenciled upon it or bears a label containing a lot designation and the invoice or other records accompanying and pertaining to such seed bear the various statements required for the respective seeds.

(d) Each container of agricultural seed and vegetable seed offered for entry into the United States for cleaning need not be labeled to show the information required under paragraph (b) of this section if:

(1) The seed is in bulk;

(2) The seed is in containers and in quantities of 20,000 pounds or more, regardless of the number of lots involved, and the invoice or other records accompanying and pertaining to the seed show that the seed is for cleaning; or

(3) The seed is in containers and in quantities less than 20,000 pounds, and each container carries a label that bears the words ''Seed for cleaning.''

§ 361.4 Inspection at the port of first arrival.

(a) All agricultural seed, vegetable seed, and screenings offered for entry into the United States shall be subject to inspection at the port of first arrival. Lots of agricultural seed, vegetable seed, or screenings may enter the United States without meeting the sampling requirements of paragraph (b) of this section if the lot is:

(1) Seed that is not being imported for seeding (planting) purposes and the declaration required by § 361.3(a) states the purpose for which the seed is being imported;

(2) Seed that is being shipped in bond through the United States;

(3) Screenings from seeds of wheat, oats, barley, rye, buckwheat, field corn, sorghum, broomcorn, flax, millet, proso, soybeans, cowpeas, field peas, or field beans that are not being imported for seeding (planting) purposes and the declaration accompanying the screenings as required under § 361.2(a) indicates that the screenings are being imported for processing or manufacturing purposes;

(4) Seed that is being imported for sowing for experimental or breeding purposes, is not for sale, is limited in quantity to the amount indicated in column 3 of table 1 of § 361.5, and is accompanied by a declaration stating the purpose for which it is being imported (seed imported for increase purposes only will not be considered as being imported for experimental or breeding purposes); or

(5) Seed that was grown in the United States, exported, and is now returning to the United States, provided that the person importing the seed into the United States furnishes APHIS with the following documentation:

(i) Export documents indicating the quantity of seed and number of containers, the date of exportation from the United States, the distinguishing marks on the containers at the time of exportation, and the name and address of the United States exporter;

(ii) A document issued by a Customs or other government official of the country to which the seed was exported indicating that the seed was not admitted into the commerce of that country; and

(iii) A document issued by a Customs or other government official of the country to which the seed was exported indicating that the seed was not commingled with other seed after being exported to that country.

(b) Except as provided in §§ 361.5(a)(2) and 361.7, samples will be taken from all agricultural seed and vegetable seed offered for entry into the United States that is being imported for seeding (planting) purposes prior to being released into the commerce of the United States.

(1) Samples of seed will be taken from each lot of seed in accordance with § 361.5 to determine whether any seeds of noxious weeds listed in § 361.6(a) are present. If seeds of noxious weeds are present at a level higher than the tolerances set forth in § 361.6(b), the lot of seed will be deemed to be adulterated and will be rejected for entry into the United States for seeding (planting) purposes. Once deemed adulterated, the lot of seed must be:

(i) Exported from the United States;

(ii) Destroyed under the supervision of an APHIS inspector;

(iii) Cleaned under APHIS supervision at a seed-cleaning facility that is operated in accordance with § 361.8(a); or

(iv) If the lot of seed is adulterated with the seeds of a noxious weed listed in § 361.6(a)(2), the seed may be allowed entry into the United States for feeding or manufacturing purposes, provided the importer withdraws his or her original declaration and files a new declaration stating that the seed is being imported for feeding or manufacturing purposes and that no part of the seed will be used for seeding (planting) purposes.

(2) Seed deemed adulterated may not be mixed with any other seed unless the Administrator determines that two or more lots of seed deemed adulterated are of substantially the same quality and origin. In such cases, the Administrator may allow the adulterated lots of seed to be mixed for cleaning as provided in paragraph (b)(1)(iii) of this section.

(3) If the labeling of a lot of seed is found to be false or misleading in any respect, a finding of false labeling will be made and the seed will be rejected for entry into the United States. A lot of seed found to be falsely labeled must be:

(i) Exported from the United States;

(ii) Destroyed under the supervision of an APHIS inspector; or

(iii) The seed may be allowed entry into the United States if the labeling is corrected under the supervision of an APHIS inspector to accurately reflect the character of the lot of seed.

§ 361.5 Sampling of seed.

(a) *Sample sizes.* As provided in § 361.4(b), samples of seed will be taken from each lot of seed being imported for seeding purposes to determine whether any seeds of noxious weeds listed in

§ 361.6(a) are present. The samples shall be drawn in the manner described in paragraphs (b) and (c) of this section. Unused portions of samples of rare or expensive seeds will be returned by APHIS upon request of the importer.

(1) A minimum sample of not less than 1 quart shall be drawn from each lot of agricultural seed; a minimum sample of not less than 1 pint shall be drawn from each lot of vegetable seed, except that a sample of ¼ pint will be sufficient for a vegetable seed importation of 5 pounds or less. The minimum sample shall be divided repeatedly until a working sample of proper weight has been obtained. If a mechanical divider cannot be used or is not available, the sample shall be thoroughly mixed, then placed in a pile; the pile shall be divided repeatedly into halves until a working sample of the proper weight remains. The weights of the working samples for noxious weed examination for each lot of seed are shown in column 1 of table 1 of this section. If the lot of seed is a mixture, the following methods shall be used to determine the weight of the working sample:

(i) If the lot of seed is a mixture consisting of one predominant kind of seed or a group of kinds of similar size, the weight of the working sample shall be the weight shown in column 1 of table 1 of this section for the kind or group of kinds that comprises more than 50 percent of the sample.

(ii) If the lot of seed is a mixture consisting of two or more kinds or groups of kinds of different sizes, none of which comprises over 50 percent of the sample, the weight of the working sample shall be the weighted average (to the nearest half gram) of the weight shown in column 1 of table 1 of this section for each of the kinds that comprise the sample, as determined by the following method:

(A) Multiply the percentage of each component of the mixture (rounded off to the nearest whole number) by the sample sizes shown in column 1 of table 1 of this section;

(B) add all these products;

(C) total the percentages of all components of the mixtures; and

(D) divide the sum in paragraph (a)(1)(ii)(B) of this section by the total in paragraph (a)(1)(ii)(C) of this section.

(2) It is not ordinarily practical to sample and test small lots of seed offered for entry. The maximum sizes of lots of each kind of seed not ordinarily sampled are shown in column 2 of table 1 of this section.

(3) The maximum sizes of lots of each kind of seed allowed entry without sampling for sowing for experimental or breeding purposes as provided in § 361.4(a)(4) are shown in column 3 of table 1 of this section.

TABLE 1

Name of seed	Working weight for noxious weed examination (grams) (1)	Maximum weight of seed lot not ordinarily sampled (pounds) (2)	Maximum weight of seed lot permitted entry for experimental or breeding purposes without sampling (pounds) (3)
VEGETABLE SEED			
Artichoke	500	25	50
Asparagus	500	25	50
Asparagusbean	500	25	50
Bean	.....	25	200
garden	500	100	500
lima	500	25	200
runner	500	25	200
Beet	300	25	50
Broadbean	500	25	200
Broccoli	50	5	10
Brussels sprouts	50	5	10
Burdock, great	150	10	50
Cabbage	50	5	10
Cabbage, Chinese	50	5	10
Cabbage, tronchuda	100	5	10
Cantaloupe (see Melon).			
Cardoon	500	25	50
Carrot	50	5	10
Cauliflower	50	5	10
Celeriac	25	5	10
Celery	25	5	10
Chard, Swiss	300	25	50
Chicory	50	5	10
Chives	50	5	10
Citron	500	25	50
Collards	50	5	10
Corn, sweet	500	25	200
Cornsalad	50	5	10
Cowpea	500	25	200
Cress, garden	50	5	10
Cress, upland	35	5	10
Cress, water	25	5	10
Cucumber	500	25	50

TABLE 1—Continued

Name of seed	Working weight for noxious weed examination (grams) (1)	Maximum weight of seed lot not ordinarily sampled (pounds) (2)	Maximum weight of seed lot permitted entry for experimental or breeding purposes without sampling (pounds) (3)
Dandelion	35	5	10
Dill	50	5	10
Eggplant	50	5	10
Endive	50	5	10
Gherkin, West India	160	25	50
Kale	50	5	10
Kale, Chinese	50	5	10
Kale, Siberian	80	5	10
Kohlrabi	50	5	10
Leek	50	5	10
Lettuce	50	5	10
Melon	500	25	50
Mustard, India	50	25	100
Mustard, spinach	50	5	10
Okra	500	25	50
Onion	50	5	10
Onion, Welsh	50	5	10
Pak-choi	50	5	10
Parsley	50	5	10
Parsnip	50	5	10
Pea	500	25	200
Pepper	150	5	10
Pumpkin	500	25	50
Radish	300	25	50
Rhubarb	300	5	10
Rutabaga	50	5	10
Sage	150	25	50
Salsify	300	25	50
Savory, summer	35	5	10
Sorrel	35	5	10
Soybean	500	25	200
Spinach	150	25	50
Spinach, New Zealand	500	25	50
Squash	500	25	50
Tomato	50	5	10
Tomato, husk	35	5	10
Turnip	50	5	10
Watermelon	500	25	50
AGRICULTURAL SEED			
Agrotricum	500	100	500
Alfalfa	50	25	100
Alfilaria	50	25	100
Alyceclover	50	25	100
Bahiagrass	50	25	100
Barrelclover	100	25	100
Barley	500	100	500
Bean, adzuki	500	100	500
Bean, field	500	100	500
Bean, mung	500	100	500
Bean (see Velvetbean).			
Beet, field	500	100	500
Beet, sugar	500	100	1,000
Beggarweed	50	25	100
Bentgrass, colonial	2.5	25	100
Bentgrass, creeping	2.5	25	100
Bentgrass, velvet	2.5	25	100
Bermudagrass	10	25	100
Bermudagrass, giant	10	25	100
Bluegrass, annual	10	25	100
Bluegrass, bulbous	40	25	100
Bluegrass, Canada	5	25	100
Bluegrass, glaucantha	10	25	100

TABLE 1—Continued

Name of seed	Working weight for noxious weed examination (grams) (1)	Maximum weight of seed lot not ordinarily sampled (pounds) (2)	Maximum weight of seed lot permitted entry for experimental or breeding purposes without sampling (pounds) (3)
Bluegrass, Kentucky	10	25	100
Bluegrass, Nevada	10	25	100
Bluegrass, rough	5	25	100
Bluegrass, Texas	10	25	100
Bluegrass, wood	5	25	100
Bluejoint	5	25	100
Bluestem, big	70	25	100
Bluestem, little	50	25	100
Bluestem, sand	100	25	100
Bluestem, yellow	10	25	100
Bottlebrush-squirreltail	90	25	100
Brome, field	50	25	100
Brome, meadow	130	25	100
Brome, mountain	200	25	100
Brome, smooth	70	25	100
Broomcorn	400	100	500
Buckwheat	500	100	500
Buffalograss:			
(burs)	200	25	100
(caryopses)	30	25	100
Buffelgrass:			
(fascicles)	66	25	100
(caryopses)	20	25	100
Burclover, California:			
(in bur)	500	100	500
(out of bur)	70	25	100
Burclover, spotted:			
(in bur)	500	100	500
(out of bur)	50	25	100
Burnet, little	250	25	100
Buttonclover	70	25	100
Canarygrass	200	25	100
Canarygrass, reed	20	25	100
Carpetgrass	10	25	100
Castorbean	500	100	500
Chess, soft	50	25	100
Chickpea	500	100	500
Clover, alsike	20	25	100
Clover, arrowleaf	40	25	100
Clover, berseem	50	25	100
Clover, cluster	10	25	100
Clover, crimson	100	25	100
Clover, Kenya	20	25	100
Clover, Ladino	20	25	100
Clover, Lappa	20	25	100
Clover, large hop	10	25	100
Clover, Persian	20	25	100
Clover, red	50	25	100
Clover, rose	70	25	100
Clover, small hop:			
(suckling)	20	25	100
Clover, strawberry	50	25	100
Clover, sub:			
(subterranean)	250	25	100
Clover, white	20	25	100
Corn, field	500	100	1,000
Corn, pop	500	100	1,000
Cotton	500	100	500
Cowpea	500	100	500
Crambe	250	25	100
Crested dogtail	20	25	100
Crotalaria, lance	70	25	100
Crotalaria, showy	250	25	100

TABLE 1—Continued

Name of seed	Working weight for noxious weed examination (grams) (1)	Maximum weight of seed lot not ordinarily sampled (pounds) (2)	Maximum weight of seed lot permitted entry for experimental or breeding purposes without sampling (pounds) (3)
Crotalaria, slenderleaf	100	25	100
Crotalaria, striped	100	25	100
Crotalaria, Sunn	500	25	100
Crownvetch	100	25	100
Dallisgrass	40	25	100
Dichondra	50	25	100
Dropseed, sand	2.5	25	100
Emmer	500	100	500
Fescue, Chewings	30	25	100
Fescue, hair	10	25	100
Fescue, hard	20	25	100
Fescue, meadow	50	25	100
Fescue, red	30	25	100
Fescue, sheep	20	25	100
Fescue, tall	50	25	100
Flax	150	25	100
Galletagrass:			
(other than caryopses)	100	25	100
(caryopses)	50	25	100
Grama, blue	20	25	100
Grama, side-oats:			
(other than caryopses)	60	25	100
(caryopses)	20	25	100
Guar	500	25	100
Guineagrass	20	25	100
Hardinggrass	30	25	100
Hemp	500	100	500
Indiangrass, yellow	70	25	100
Indigo, hairy	70	25	100
Japanese lawngrass	20	25	100
Johnsongrass	100	25	100
Kenaf	500	100	500
Kochia, forage	20	25	100
Kudzu	250	25	100
Lentil	500	25	100
Lespedeza, Korean	50	25	100
Lespedeza, sericea or Chinese	30	25	100
Lespedeza, Siberian	30	25	100
Lespedeza, striate	50	25	100
Lovegrass, sand	10	25	100
Lovegrass, weeping	10	25	100
Lupine, blue	500	100	500
Lupine, white	500	100	500
Lupine, yellow	500	100	500
Manilagrass	20	25	100
Meadow foxtail	30	25	100
Medick, black	50	25	100
Milkvetch	90	25	100
Millet, browntop	80	25	100
Millet, foxtail	50	25	100
Millet, Japanese	90	25	100
Millet, pearl	150	25	100
Millet, proso	150	25	100
Molassesgrass	5	25	100
Mustard, black	20	25	100
Mustard, India	50	25	100
Mustard, white	150	25	100
Napiergrass	50	25	100
Needlegrass, green	70	25	100
Oat	500	100	500
Oatgrass, tall	60	25	100
Orchardgrass	30	25	100
Panicgrass, blue	20	25	100

TABLE 1—Continued

Name of seed	Working weight for noxious weed examination (grams) (1)	Maximum weight of seed lot not ordinarily sampled (pounds) (2)	Maximum weight of seed lot permitted entry for experimental or breeding purposes without sampling (pounds) (3)
Panicgrass, green	20	25	100
Pea, field	500	100	500
Peanut	500	100	500
Poa trivialis (see bluegrass, rough)			
Rape, annual	70	25	100
Rape, bird	70	25	100
Rape, turnip	50	25	100
Rape, winter	100	25	100
Redtop	2.5	25	100
Rescuegrass	200	25	100
Rhodesgrass	10	25	100
Rice	500	100	500
Ricegrass, Indian	70	25	100
Roughpea	500	100	500
Rye	500	100	500
Rye, mountain	280	25	100
Ryegrass, annual	50	25	100
Ryegrass, intermediate	80	25	100
Ryegrass, perennial	50	25	100
Ryegrass, Wimmera	50	25	100
Safflower	500	100	500
Sagewort, Louisiana	5	25	100
Sainfoin	500	100	500
Saltbush, fourwing	150	25	100
Seasame	70	25	100
Sesbania	250	25	100
Smilo	20	25	100
Sorghum	500	100	1,000
Sorghum almum	150	25	100
Sorghum-sudangrass hybrid	500	100	1,000
Sorgrass	150	25	100
Sourclover	50	25	100
Soybean	500	100	500
Spelt	500	100	500
Sudangrass	250	25	100
Sunflower	500	100	500
Sweetclover, white	50	25	100
Sweetclover, yellow	50	25	100
Sweet vernalgrass	20	25	100
Sweetvetch, northern	190	25	100
Switchgrass	40	25	100
Timothy	10	25	100
Timothy, turf	10	25	100
Tobacco	5	1	1
Trefoil, big	20	25	100
Trefoil, birdsfoot	30	25	100
Triticale	500	100	500
Vaseygrass	30	25	100
Veldtgrass	40	25	100
Velvetbean	500	100	500
Velvetgrass	10	25	100
Vetch, common	500	100	500
Vetch, hairy	500	100	500
Vetch, Hungarian	500	100	500
Vetch, Monantha	500	100	500
Vetch, narrowleaf	500	100	500
Vetch, purple	500	100	500
Vetch, woolypod	500	100	500
Wheat, common	500	100	500
Wheat, club	500	100	500
Wheat, durum	500	100	500
Wheat, Polish	500	100	500
Wheat, poulard	500	100	500

TABLE 1—Continued

Name of seed	Working weight for noxious weed examination (grams) (1)	Maximum weight of seed lot not ordinarily sampled (pounds) (2)	Maximum weight of seed lot permitted entry for experimental or breeding purposes without sampling (pounds) (3)
Wheat x Agrotricum	500	100	500
Wheatgrass, beardless	80	25	100
Wheatgrass, fairway crested	40	25	100
Wheatgrass, standard crested	50	25	100
Wheatgrass, intermediate	150	25	100
Wheatgrass, pubescent	150	25	100
Wheatgrass, Siberian	50	25	100
Wheatgrass, slender	70	25	100
Wheatgrass, streambank	50	25	100
Wheatgrass, tall	150	25	100
Wheatgrass, western	100	25	100
Wildrye, basin	80	25	100
Wild-rye, Canada	110	25	100
Wild-rye, Russian	60	25	100
Zoysia Japonica (see Japanese lawngrass).			
Zoysia matrella (see Manilagrass).			

(b) *Method of sampling.* (1) When an importation consists of more than one lot, each lot shall be sampled separately.

(2) For lots of six or fewer bags, each bag shall be sampled. A total of at least five trierfuls shall be taken from the lot.

(3) For lots of more than six bags, five bags plus at least 10 percent of the number of bags in the lot shall be sampled. (Round off numbers with decimals to the nearest whole number, raising 0.5 to the next whole number.) Regardless of the lot size, it is not necessary to sample more than 30 bags.

(4) When the lot of seed to be sampled is comprised of seed in small containers that cannot practically be sampled as described in paragraph (b)(2) or (b)(3) of this section, entire unopened containers may be taken in sufficient number to supply a sample that meets the minimum size requirements of paragraph (a)(1) of this section.

(c) *Drawing samples.* Samples will not be drawn unless each container is labeled to show the lot designation and the name of the kind and variety of each agricultural seed, or kind and variety of each vegetable seed, appearing on the invoice and other entry papers, and a declaration has been filed by the importer as required under § 361.2(a). In order to secure a representative sample, an APHIS inspector will draw equal portions from evenly distributed parts of the quantity of seed to be sampled; the APHIS inspector, therefore, must be given access to all parts of that quantity.

(1) For free-flowing seed in bags or in bulk, a probe or trier shall be used. For small free-flowing seed in bags, a probe or trier long enough to sample all portions of the bag shall be used. When drawing more than one trierful of seed from a bag, a different path through the seed shall be used when drawing each sample.

(2) For non-free-flowing seed in bags or bulk that may be difficult to sample with a probe or trier, samples shall be obtained by thrusting one's hand into the seed and withdrawing representative portions. The hand shall be inserted in an open position with the fingers held closely together while the hand is being inserted and the portion withdrawn. When more than one handful is taken from a bag, the handfuls shall be taken from well-separated points.

(3) When more than one sample is drawn from a single lot, the samples may be combined into a composite sample unless it appears that the quantity of seed represented as a lot is not of uniform quality, in which case the separate samples shall be forwarded together, but without being combined into a composite sample.

(d) In most cases, samples will be drawn and examined by an APHIS inspector at the port of first arrival. The APHIS inspector may release a shipment if no contaminants are found and the labeling is sufficient. If contaminants are found or the labeling of the seed is insufficient, the APHIS inspector may forward the sample to the USDA Seed Examination Facility (SEF), Beltsville, MD, for analysis, testing, or examination. APHIS will notify the owner or consignee of the seed that samples have been drawn and forwarded to the SEF and that the shipment must be held intact pending a decision by APHIS as to whether the seed is within the noxious weed seed tolerances of § 361.6 and is accurately labeled. If the decision pending is with regard to the noxious weed seed content of the seed and the seed has been determined to be accurately labeled, the seed may be released for delivery to the owner or consignee under the following conditions:

(1) The owner or consignee executes with Customs either a Customs single-entry bond or a Customs term bond, as appropriate, in such amount as is prescribed by applicable Customs regulations;

(2) The bond must contain a condition for the redelivery of the seed or any part thereof upon demand of the Port Director of Customs at any time;

(3) Until the seed is approved for entry upon completion of APHIS' examination, the seed must be kept intact and not tampered with in any way, or removed from the containers except under the supervision of an APHIS inspector; and

(4) The owner or consignee must keep APHIS informed as to the location of the seed until it is finally entered into the commerce of the United States.

§ 361.6 Noxious weed seeds.

(a) Seeds of the plants listed in paragraphs (a)(1) and (a)(2) of this

section shall be considered noxious weed seeds.

(1) Seeds with no tolerances applicable to their introduction:

Aeginetia spp.
Ageratina adenophora (Sprengel) King & Robinson
Alectra spp.
Alternanthera sessilis (L.) R. Brown ex de Candolle
Asphodelus fistulosus L.
Avena sterilis L. (including *Avena ludoviciana* Durieu)
Azolla pinnata R. Brown
Borreria alata (Aublet) de Candolle
Carthamus oxyacantha M. Bieberstein
Chrysopogon aciculatus (Retzius) Trinius
Commelina benghalensis L.
Crupina vulgaris Cassini
Cuscuta spp.
Digitaria abyssinica (=*D. scalarum*)
Digitaria velutina (Forsskal) Palisot de Beauvois
Drymaria arenarioides Humboldt & Bonpland ex Roemer & Schultes
Eichhornia azurea (Swartz) Kunth
Emex australis Steinheil
Emex spinosa (L.) Campdera
Galega officinalis L.
Heracleum mantegazzianum Sommier & Levier
Hydrilla verticillata (Linnaeus f.) Royle
Hygrophila polysperma T. Anderson
Imperata brasiliensis Trinius
Imperata cylindrica (L.) Raeuschel
Ipomoea aquatica Forsskal
Ipomoea triloba L.
Ischaemum rugosum Salisbury
Lagarosiphon major (Ridley) Moss
Leptochloa chinensis (L.) Nees
Limnophila sessiliflora (Vahl) Blume
Lycium ferocissimum Miers
Melaleuca quinquenervia (Cav.) Blake
Melastoma malabathricum L.
Mikania cordata (Burman f.) B. L. Robinson
Mikania micrantha Humboldt, Bonpland, & Kunth
Mimosa invisa Martius
Mimosa pigra L. var. pigra
Monochoria hastata (L.) Solms-Laubach
Monochoria vaginalis (Burman f.) C. Presl
Nassella trichotoma (Nees) Hackel ex Arechavaleta
Opuntia aurantiaca Lindley
Orobanche spp.
Oryza longistaminata A. Chevalier & Roehrich
Oryza punctata Kotschy ex Steudel
Oryza rufipogon Griffith
Ottelia alismoides (L.) Pers.
Paspalum scrobiculatum L.
Pennisetum clandestinum Hochstetter ex Chiovenda
Pennisetum macrourum Trinius
Pennisetum pedicellatum Trinius
Pennisetum polystachion (L.) Schultes
Prosopis alapataco R. A. Philippi
Prosopis argentina Burkart
Prosopis articulata S. Watson
Prosopis burkartii Munoz
Prosopis caldenia Burkart
Prosopis calingastana Burkart
Prosopis campestris Grisebach
Prosopis castellanosii Burkart
Prosopis denudans Bentham
Prosopis elata (Burkart) Burkart
Prosopis farcta (Solander ex Russell) Macbride
Prosopis ferox Grisebach
Prosopis fiebrigii Harms
Prosopis hassleri Harms
Prosopis humilis Gillies ex Hooker & Arnott
Prosopis kuntzei Harms
Prosopis pallida (Humboldt & Bonpland ex Willdenow) Humboldt, Bonpland, & Kunth
Prosopis palmeri S. Watson
Prosopis reptans Bentham var. *reptans*
Prosopis rojasiana Burkart
Prosopis ruizlealii Burkart
Prosopis ruscifolia Grisebach
Prosopis sericantha Gillies ex Hooker & Arnott
Prosopis strombulifera (Lamarck) Bentham
Prosopis torquata (Cavanilles ex Lagasca y Segura) de Candolle
Rottboellia cochinchinensis (Lour.) Clayon (=*R. exaltata* (L.) L. f.)
Rubus fruticosus L. (complex)
Rubus moluccanus L.
Saccharum spontaneum L.
Sagittaria sagittifolia L.
Salsola vermiculata L.
Salvinia auriculata Aublet
Salvinia biloba Raddi
Salvinia herzogii de la Sota
Salvinia molesta D.S. Mitchell
Setaria pallide-fusca (Schumacher) Stapf & Hubbard
Solanum torvum Swartz
Solanum viarum Dunal
Sparganium erectum L.
Striga spp.
Tridax procumbens L.
Urochloa panicoides Beauvois

(2) Seeds with tolerances applicable to their introduction:

Acroptilon repens (L.) DC. (=*Centaurea repens* L.) (=*Centaurea picris*)
Cardaria draba (L.) Desv.
Cardaria pubescens (C. A. Mey.) Jarmol.
Convolvulus arvensis L.
Cirsium arvense (L.) Scop.
Elytrigia repens (L.) Desv. (=*Agropyron repens* (L.) Beauv.)
Euphorbia esula L.
Sonchus arvensis L.
Sorghum halepense (L.) Pers.

(b) The tolerance applicable to the prohibition of the noxious weed seeds listed in paragraph (a)(2) of this section shall be two seeds in the minimum amount required to be examined as shown in column 1 of table 1 of § 361.5. If fewer than two seeds are found in an initial examination, the shipment from which the sample was drawn may be imported. If two seeds are found in an initial examination, a second sample must be examined. If two or fewer seeds are found in the second examination, the shipment from which the samples were drawn may be imported. If three or more seeds are found in the second examination, the shipment from which the samples were drawn may not be imported. If three or more seeds are found in an initial examination, the shipment from which the sample was drawn may not be imported.

(c) Any seed of any noxious weed that can be determined by visual inspection (including the use of transmitted light or dissection) to be within one of the following categories shall be considered inert matter and not counted as a weed seed:

(1) Damaged seed (other than grasses) with over one half of the embryo missing;

(2) Grass florets and caryopses classed as inert:

(i) Glumes and empty florets of weedy grasses;

(ii) Damaged caryopses, including free caryopses, with over one-half the root-shoot axis missing (the scutellum excluded);

(iii) Immature free caryopses devoid of embryo or endosperm;

(iv) Free caryopses of quackgrass (*Elytrigia repens*) that are 2 mm or less in length; or

(v) Immature florets of quackgrass (*Elytrigia repens*) in which the caryopses are less than one-third the length of the palea. The caryopsis is measured from the base of the rachilla.

(3) Seeds of legumes (*Fabaceae*) with the seed coats entirely removed.

(4) Immature seed units, devoid of both embryo and endosperm, such as occur in (but not limited to) the following plant families: buckwheat (*Polygonaceae*), morning glory (*Convolvulaceae*), nightshade (*Solanaceae*), and sunflower (*Asteraceae*).

(5) Dodder (*Cuscuta* spp.) seeds devoid of embryos and seeds that are ashy gray to creamy white in color are inert matter. Dodder seeds should be sectioned when necessary to determine if an embryo is present, as when the seeds have a normal color but are slightly swollen, dimpled, or have minute holes.

§ 361.7 Special provisions for Canadian-origin seed and screenings.

(a) In addition to meeting the declaration and labeling requirements of § 361.2 and all other applicable provisions of this part, all Canadian-origin agricultural seed and Canadian-origin vegetable seed offered for entry into the United States from Canada for seeding (planting) purposes or cleaning must be accompanied by a certificate of analysis issued by Agriculture and Agri-Food Canada or by a private seed laboratory accredited by Agriculture and Agri-Food Canada. Samples of seed shall be drawn using sampling methods comparable to those detailed in § 361.5 of this part. The seed analyst who examines the seed at the laboratory must be accredited to analyze the kind of seed covered by the certificate.

(1) If the seed is being imported for seeding (planting) purposes, the certificate of analysis must verify that the seed meets the noxious weed seed tolerances of § 361.6. Such seed will not be subject to the sampling requirements of § 361.3(b).

(2) If the seed is being imported for cleaning, the certificate of analysis must name the kinds of noxious weed seeds that are to be removed from the lot of seed. Seed being imported for cleaning must be consigned to a facility operated in accordance with § 361.8(a).

(b) Coated or pelleted agricultural seed and coated or pelleted vegetable seed of Canadian origin may be imported into the United States if the seed was analyzed prior to being coated or pelleted and is accompanied by a certificate of analysis issued in accordance with paragraph (a) of this section.

(c) Screenings otherwise prohibited under this part may be imported from Canada if the screenings are imported for processing or manufacture and are consigned to a facility operating under a compliance agreement as provided by § 361.8(b).

§ 361.8 Cleaning of imported seed and processing of certain Canadian-origin screenings.

(a) Imported seed that is found to contain noxious weed seeds at a level higher than the tolerances set forth in § 361.6(b) may be cleaned under the supervision of an APHIS inspector. The cleaning will be at the expense of the owner or consignee.

(1) At the location where the seed is being cleaned, the identity of the seed must be maintained at all times to the satisfaction of the Administrator. The refuse from the cleaning must be placed in containers and securely sealed and identified. Upon completion of the cleaning, a representative sample of the seed will be analyzed by a registered seed technologist, an official seed analyst, or by APHIS; if the seed is found to be within the noxious weed tolerances set forth in § 361.6(b), the seed may be allowed entry into the United States;

(2) The refuse from the cleaning must be destroyed under the supervision of an APHIS inspector at the expense of the owner or consignee of the seed.

(3) Any person engaged in the business of cleaning imported seed may enter into a compliance agreement under paragraph (c) of this section to facilitate the cleaning of seed imported into the United States under this part.

(b) Any person engaged in the business of processing screenings who wishes to process screenings imported from Canada under § 361.7(c) that are otherwise prohibited under this part must enter into a compliance agreement under paragraph (c) of this section.

(c) A compliance agreement for the cleaning of imported seed or processing of otherwise prohibited screenings from Canada shall be a written agreement [1] between a person engaged in such a business, the State in which the business operates, and APHIS, wherein the person agrees to comply with the provisions of this part and any conditions imposed pursuant thereto. Any compliance agreement may be canceled orally or in writing by the APHIS inspector who is supervising its enforcement whenever the inspector finds that the person who entered into the compliance agreement has failed to comply with the provisions of this part or any conditions imposed pursuant thereto. If the cancellation is oral, the decision and the reasons for the decision shall be confirmed in writing, as promptly as circumstances permit. Any person whose compliance agreement has been canceled may appeal the decision to the Administrator, in writing, within 10 days after receiving written notification of the cancellation. The appeal shall state all of the facts and reasons upon which the person relies to show that the compliance agreement was wrongfully canceled. The Administrator shall grant or deny the appeal, in writing, stating the reasons for such decision, as promptly as circumstances permit. If there is a conflict as to any material fact, a hearing shall be held to resolve such conflict. Rules of practice concerning such a hearing will be adopted by the Administrator.

[1] Compliance Agreement forms are available without charge from Permit Unit, PPQ, APHIS, 4700 River Road Unit 136, Riverdale, MD 20737–1236, and from local offices of the Plant Protection and Quarantine. (Local offices are listed in telephone directories).

§ 361.9 Recordkeeping.

(a) Each person importing agricultural seed or vegetable seed under this part must maintain a complete record, including copies of the declaration and labeling required under this part and a sample of seed, for each lot of seed imported. Except for the seed sample, which may be discarded 1 year after the entire lot represented by the sample has been disposed of by the person who imported the seed, the records must be maintained for 3 years following the importation.

(b) Each sample of vegetable seed and each sample of agricultural seed must be at least equal in weight to the sample size prescribed for noxious weed seed examination in table 1 of § 361.4.

(c) An APHIS inspector shall, during normal business hours, be allowed to inspect and copy the records.

§ 361.10 Costs and charges.

Unless a user fee is payable under § 354.3 of this chapter, the services of an APHIS inspector during regularly assigned hours of duty and at the usual places of duty will be furnished without cost. The U.S. Department of Agriculture's provisions relating to overtime charges for an APHIS inspector's services are set forth in part 354 of this chapter. The U.S. Department of Agriculture will not be responsible for any costs or charges incident to inspections or compliance with this part, other than for the services of the APHIS inspector during regularly assigned hours of duty and at the usual places of duty. All expenses incurred by the U.S. Department of Agriculture (including travel, per diem or subsistence, and salaries of officers or employees of the Department) in connection with the supervision of cleaning, labeling, other reconditioning, or destruction of seed, screenings, or refuse under this part shall be reimbursed by the owner or consignee of the seed or screenings.

Done in Washington, DC, this 30th day of September 1996.

A. Strating,

Acting Administrator, Animal and Plant Health Inspection Service.

[FR Doc. 96–25502 Filed 10–3 –96; 8:45 am]

BILLING CODE 3410–34–P

Agricultural Marketing Service

7 CFR Parts 997, 998, and 999

[Docket Nos. FV96–997–1 PR; FV96–998–4 PR and FV96–999–3 PR]

Peanuts Marketed in the United States; Changes in Handling and Disposition Requirements

AGENCY: Agricultural Marketing Service, USDA.

ACTION: Proposed rule.

SUMMARY: This proposal invites comments on relaxing, for 1996 and subsequent crop peanuts, several provisions regulating the handling and disposition of domestically and foreign produced peanuts marketed in the United States. The rule would eliminate several requirements covering the disposition of inedible peanuts. At the same time, it would provide safeguard measures including amendments to the aflatoxin provisions to prevent inedible peanuts from entering human consumption outlets. The proposal would increase opportunities for reconditioning failing peanuts and reduce inspection and handling costs to handlers and importers. The changes were recommended by the Peanut Administrative Committee (Committee), the administrative agency which oversees the quality assurance program under Peanut Marketing Agreement No. 146 (7 CFR Part 998, Agreement). By law, the same or similar regulations issued under the Agreement also must be issued under Part 997 regulating non-signatory peanut handlers, and Part 999.600 regulating peanut importers. This proposal includes changes recommended by the Department to help ensure effective safeguard measures. The recommended changes should enable the industry to be more competitive in the changing international peanut market.

DATES: Comments must be received by October 24, 1996.

ADDRESSES: Interested persons are invited to submit written comments concerning this proposal. Comments must be sent in triplicate to the Docket Clerk, Fruit and Vegetable Division, AMS, USDA, room 2523–S, P.O. Box 96456, Washington, DC 20090–6456; FAX: (202) 720–5698. All comments should reference the docket numbers, the date, and page number of this issue of the Federal Register and will be made available for public inspection in the Office of the Docket Clerk during regular business hours.

FOR FURTHER INFORMATION CONTACT: Jim Wendland, Marketing Specialist, Marketing Order Administration Branch, Fruit and Vegetable Division, AMS, USDA, P.O. Box 96456, room 2523–S, Washington, D.C. 20090–6456; telephone: (202) 720–2170, or fax: (202) 720–5698; or William G. Pimental, Marketing Specialist, Southeast Marketing Field Office, Fruit and Vegetable Division, AMS, USDA, P.O. Box 2276, Winter Haven, Florida 33883–2276; telephone: (941) 299–4770, or fax: (941) 299–5169. Small businesses may request information on compliance with this proposed regulation by contacting: Jay Guerber, Marketing Order Administration Branch, Fruit and Vegetable Division, AMS, USDA, P.O. Box 96456, room 2523–S, Washington, D.C., 20090–6456; telephone: (202) 720–2491, fax: (202) 720–5698.

SUPPLEMENTARY INFORMATION: This proposal is issued under Peanut Marketing Agreement No. 146 (7 CFR Part 998); the non-signatory handler peanut regulation (7 CFR Part 997); and the peanut import regulation published in the June 19, 1996, issue of the Federal Register (61 FR 31306, 7 CFR Part 999.600). These programs regulate the quality of domestically produced peanuts handled by Agreement signers and non-signers as well as imported peanuts. The first two Parts are effective under the Agricultural Marketing Agreement Act of 1937, as amended (7 U.S.C. 601–674), hereinafter referred to as the ''Act.'' Part 999 is effective under section 108B(f)(2) of the Agricultural Act of 1949, as amended (7 U.S.C. 1445c–3).

The U.S. Department of Agriculture (Department) is issuing this rule in conformance with Executive Order 12866.

This proposed rule has been reviewed under Executive Order 12988, Civil Justice Reform. This rule is not intended to have retroactive effect. This rule will not preempt any State or local laws, regulations, or policies, unless they present an irreconcilable conflict with this rule. There are no administrative procedures which must be exhausted prior to any judicial challenge to the provisions of this rule.

Pursuant to the requirements set forth in the Regulatory Flexibility Act (RFA), the Agricultural Marketing Service (AMS) has considered the economic impact of this action on small entities.

The purpose of the RFA is to fit regulatory actions to the scale of business subject to such actions in order that small businesses will not be unduly or disproportionately burdened.

About 80 signatory or non-signatory peanut handlers are subject to regulation under the two domestic programs. There are about 47,000 peanut producers in the 16-state production area. Small agricultural service firms, which include handlers and importers, have been defined by the Small Business Administration (13 CFR 121.601) as those having annual receipts of less than $5,000,000, and small agricultural producers have been defined as those having annual receipts of less than $500,000. Approximately 25 percent of the signatory handlers, virtually all of the non-signers, and most of the producers may be classified as small entities. The import requirements have not been in place long enough to determine the exact number of peanut importers or the percentage which qualify as small businesses. However, it can be assumed that some importers are small entities. Interested persons are invited to submit information on the regulatory impact of this proposed rule on small businesses.

The changes to handling requirements proposed in this rule would enable handlers to more efficiently manage and process their peanut inventories and make better use of their inedible peanuts, without jeopardizing safeguard requirements in the current regulations. The relaxed requirements should reduce handling costs and, thus, increase returns to handlers. The rule would also ensure that all lots of peanuts intended for human consumption are chemically tested and negative to aflatoxin, and that foreign produced peanuts awaiting the start of the new quota period are properly stored. These changes should benefit peanut handlers and peanut importers by ensuring that all peanuts in domestic U.S. human consumption markets are wholesome.

Domestic peanut production in 1995 was 1.76 million tons, with a farm value of slightly over $1 billion.

The objective of the two domestic programs and the import regulation is to ensure that only high quality and wholesome peanuts enter human consumption markets in the United States. About 70 percent of domestic handlers, handling approximately 95 percent of the crop, have signed the Agreement. The remaining 30 percent are non-signatory handlers handling the remaining 5 percent of domestic production. The 1995 duty-free import quota was equal to approximately 2 percent of 1995 domestic production.

Under the three regulations, farmers stock peanuts with visible *Aspergillus flavus* mold (the principal source of aflatoxin) are required to be diverted to inedible uses. Each lot of milled peanuts must be sampled and the samples chemically analyzed for aflatoxin content. Costs to administer the

Agreement and to reimburse the Department for oversight of the non-signatory program are paid by an assessment levied on handlers in the respective programs.

The Committee, which is composed of producers and handlers of peanuts, meets at least annually to review the Agreement's rules and regulations, which are effective on a continuous basis from one year to the next. Committee meetings are open to the public, and interested persons may express their views at these meetings. The Department assesses Committee recommendations as well as information from other sources, prior to making any recommended changes to the regulations under the Agreement.

Public Law 101–220 amended section 608b of the Act in 1989 to require that all peanuts handled by persons who have not entered into the agreement (non-signers) be subject to the same quality and inspection requirements to the same extent and manner as are required under the Agreement. The non-signatory handler regulations have been amended several times thereafter and are published in 7 CFR part 997.

Similarly, recent amendments to the Agricultural Act of 1949 require that all foreign produced peanuts in the domestic market fully comply with all quality standards under the Agreement. Section 999.600—Specialty Crops; Import Regulations was added to 7 CFR part 999 on June 19, 1996 (61 FR 31306), to establish minimum quality, identification, certification and safeguard requirements for foreign-produced farmers' stock, shelled and cleaned-inshell peanuts presented for importation into the United States.

Thus, the Committee's recommended changes to the Agreement's regulations, as proposed in this rule, also are proposed for the peanut non-signer and import regulations. This proposed rule identifies the corresponding changes to the non-signer and import regulations for each proposed change to Agreement requirements.

According to the Committee, the domestic peanut industry is undergoing a period of great change. The Committee bases its view, in part, on findings in a recent study entitled ''United States Peanut Industry Revitalization Project'' developed by the National Peanut Council and the Department's Agricultural Research Service (May, 1996). According to the study, the U.S. peanut industry has been in a period of dramatic economic decline since 1991 because of: (1) Decreasing consumption of peanuts and peanut products; (2) accompanying decreases in U.S. peanut production and increases in production costs; and (3) increasing imports of peanuts and peanut products.

The study shows that peanut consumption has declined. Between 1991 and 1994, per capita peanut consumption steadily declined a total of 11 percent. Peanuts used in primary products declined 12 percent, and peanuts used in peanut butter (the largest product usage) declined 20 percent.

Among other things, the study shows that harvested acreage of peanuts in the U.S. has declined 25 percent between 1991 and 1995. Production has fluctuated downward, with 1995 production 30 percent below that of 1991. Farm value of peanut production has dropped 29 percent (from $1.4 billion to slightly over $1 billion) in the same period.

The study points to recent increases in the duty-free import quota for raw peanuts. The volume of imported peanuts has, indeed, increased due to recent significant relaxations of the duty-free quota enacted through the legislation to implement the North American Free Trade Agreement (NAFTA) and the Uruguay Round Agreements under the General Agreement on Tariffs and Trade (GATT). Prior to 1994, the volume of imported peanuts was limited, in most cases, to 1.71 million pounds annually. However, the Schedule of the United States annexed to NAFTA, implemented on January 1, 1994, provided duty-free entry for up to approximately 7.43 million pounds of qualifying peanuts from Mexico. For 1996, the duty-free access for Mexican peanuts increased to approximately 7.88 million pounds. In calendar year 2008, access for Mexican peanuts will be unlimited. In addition, the United States Schedule to the Uruguay Round Agreements under GATT increased the peanut import quota to 74.5 million pounds in 1995, with additional annual increases of approximately 10 million pounds to reach a ceiling of 125 million pounds by the year 2000 for all imported peanuts.

The study shows that imports of peanut butter from 1991 to 1996 increased 116 percent. More significantly, the study reports that imported peanut butter's share of U.S. peanut butter consumption increased 12 fold between 1988 and 1993.

The study also makes projections for the near future. Farmer production costs and revenue are projected to be equal by the year 2000, as are handler costs and revenue. Total imports of shelled peanuts and paste are expected to increase 50 percent by the year 2000 and the U.S. position in the world market is expected to drop 7 percent between 1995 and 1996.

In addition, the modifications in the Federal government's peanut quota and price support program under the Federal Agriculture Improvement and Reform Act of 1996 will result in the domestic industry undergoing changes over the next few years. The study shows that the quota poundage was reduced over 20 percent between 1991 and 1995, and the support price dropped from $670 per ton in 1995 to $610 in 1996. Further decreases in the support price are scheduled over the next few years.

The Committee agrees that all of these factors combined show that the domestic peanut industry is in decline and that the outlook is not expected to change without some positive intervention by the industry.

In mid-1994, peanut industry members began to discuss needed changes in the handling of peanuts. In mid-1994, the Committee appointed a subcommittee to evaluate the present program and to recommend changes. The Agreement's handling regulations were evaluated with the intent of streamlining procedures and making them consistent with current industry economies and technological developments.

Different recommendations were developed for streamlining both incoming and outgoing handling procedures. The proposed changes focus on handlers' freedom to prepare and dispose of peanut lots according to economic incentives of the marketplace. For instance, current restrictions that prevent certain lots failing quality requirements from being blanched or remilled would be removed so that more peanuts could be reconditioned to meet human consumption requirements. Also, provisions throughout the regulations under the Agreement require that certain lots be kept separate and apart from other, similar peanut lots. For the most part, these provisions tend to limit handlers' flexibility to move and recondition peanuts. Such provisions also may work against optimum utilization of equipment and facilities, and prevent a handler from making the most economic use of their peanut inventories. Peanut processing machinery has been improved through technological advances to the point that virtually any lot of peanuts, regardless of original (incoming) quality, can now be shelled, remilled and/or blanched (processed) to meet outgoing quality requirements of the Agreement and the non-signer program. In the final analysis, it was the opinion of the subcommittee that handlers should have

the option of deciding whether it is more economically advantageous to recondition a lot or send it to an inedible peanut outlet.

Subcommittee members also recommended that many of the requirements controlling disposition of inedible peanuts be removed because those requirements should be placed on buyers rather than handlers. The subcommittee contended that peanuts either pass or fail quality and aflatoxin requirements, and the requirements limiting disposition based on aflatoxin content (restricted and unrestricted dispositions) should be removed.

The subcommittee contended further that these changes, primarily relaxations, could be made without limiting the effectiveness of the Agreement's quality assurance program. As long as all peanut lots intended for human consumption continue to be sampled and tested against current outgoing requirements, the industry's high quality standards would be maintained.

These recommendations represent a fundamental change in the Agreement's handling regulations. The full Committee met three times from March to May, 1996, to review all of the recommendations. At a May 23, 1996, meeting the Committee recommended the following changes to the Agreement's incoming and outgoing regulations for 1996 and subsequent crop peanuts. After review of the recommendations, the Department concurs that the recommended changes would help the industry and be in the public interest. This proposed rule would not increase reporting and recordkeeping burdens under the Paperwork Reduction Act and, thus, would not change the current impact of those burdens on small businesses. Moreover, costs imposed for required testing would not be applied disproportionately to small businesses. Therefore, the AMS has determined that this proposed rule would not have a significant economic impact on a substantial number of small entities.

In accordance with the Paperwork Reduction Act of 1988 (44 U.S.C. Chapter 35), information collection requirements that are contained in this proposal have been previously approved by the Office of Management and Budget (OMB) and have been assigned OMB Nos. 0581–0067 (for signatory handlers), 0581–0163 (for non-signers), and 0581–0176 (for importers).

This proposed rule would not increase the reporting and recordkeeping burden on handlers and importers regulated under the three programs, and may even result in an overall reduction in reporting and recordkeeping requirements.

Following explanation of each recommended change to the Agreement's regulation, the corresponding proposed changes to the non-signatory regulation and to the import regulation are discussed.

Incoming Regulations

Loose Shelled Kernels

The Committee recommended amending *§ 998.100 Incoming quality regulation* by removing paragraph (d) *Loose shelled kernels* which regulates the acquisition of *loose shelled kernels* (LSKs) and other defective kernels. The Committee believes that the regulations should focus more on outgoing quality and less on the shelling and milling processes necessary to meet the outgoing, human consumption requirements. New, high technology milling and blanching equipment enables handlers to recondition failing peanut lots that could not have been reconditioned when the regulations were promulgated. Therefore, it is no longer necessary to impose restrictions that hinder efficiency of handling operations and result in the loss of potentially good quality peanuts. Thus, paragraph (d)(1) restrictions on acquiring farmers stock with more than 14.49 percent LSKs and 5 percent fall-through from specified screen sizes would be removed.

For the non-signer regulation, paragraph (d) *Loose shelled kernels* in § 997.20, corresponds to paragraph (d) of the Agreement's § 998.100. Paragraph (d) of the non-signer regulation would be removed for the reasons cited above and to be consistent with corresponding changes to the Agreement.

For the import regulation, paragraph (b)(1)(iv) *Loose shelled kernels* of § 999.600 also would be removed for the reasons cited above.

The Committee recommended removing paragraph (d)(2) which requires that handlers submit to the Committee diagrams of their handling facilities and procedures. This provision is no longer considered necessary for the Committee's oversight of the signatory handlers. Therefore, it would also be removed.

The non-signer regulation and the import regulation do not have paragraphs corresponding to paragraph (d)(2) of § 998.100.

Seed Peanuts

The Committee recommended removing the requirement in § 998.100, paragraph (e) *Seed peanuts*, that requires handlers who receive or acquire seed residuals to hold and mill such peanuts separate and apart from other edible quality peanuts. The Committee concluded that as long as the peanuts sent to human consumption outlets must ultimately meet outgoing requirements, including certification as negative to aflatoxin, it is not necessary to hold them separate and apart from other lots also destined for edible consumption. Therefore, § 998.100(e) would be amended to remove such requirement.

For the non-signer regulation, paragraph (e) *Seed peanuts* in § 997.20 contains different wording but the same meaning and intent as the Agreement's seed provisions. Changes to the Agreement's paragraph (e) concerning holding and milling seed peanuts separate and apart from other peanuts would be made to § 997.20 paragraph (e) of the non-signer regulation for the reasons cited above and to be consistent with corresponding changes to the Agreement.

For the import regulation, paragraph (b)(2) *Seed peanuts* in § 999.600, also would be changed accordingly. Further, paragraph (b)(2) provides that Segregation 2 and 3 peanuts may be shelled for seed purposes, but must be dyed or chemically treated to indicate the peanuts are unfit for human or animal consumption. This requirement is the same as that in paragraphs (i)(1) and (2) of § 998.200—which are recommended to be removed (discussed below). Corresponding changes would be made to paragraph (b)(2) of § 999.600. Finally, the Department proposes removing the second sentence of the import regulation paragraph (b)(2) on reporting disposition to the Secretary. This information is adequately covered in the last two sentences of the same paragraph.

Oilstock

In paragraph (f) of § 998.100, the Committee recommended removal of the current prohibition on exporting inedible quality peanuts to Canada or Mexico and removal of references to ''fragmented'' peanuts. Committee members expressed the point that other countries ship inedible peanuts and unfragmented peanuts to Canada and Mexico, as well as to other international markets. The Committee believes that domestic handlers should not deny themselves access to the same international markets, thereby optimizing their returns.

Further, the Committee believes that it would be better to remove the term ''fragmented'' from paragraph (f) and allow the term ''peanuts'' to refer to peanuts in any form, including

fragmented kernels, which may be acquired by handlers and disposed of to crushing or exported. The Department concurs with this recommendation. The term ''shelled'' is also removed from paragraph (f) where appropriate for the same reason.

For the non-signer regulation, the prohibition on exports to Canada and Mexico and the requirement of fragmentation would be removed to make paragraph (f) of § 997.20 consistent with the proposed changes to the regulations under the Agreement.

In § 999.600 of the import regulation, paragraph (b)(3) does not restrict exports and so no corresponding change is made.

Finally in § 998.100, the Committee recommended removal of paragraph (j) which covers disposition of shelled peanuts for use as animal feed. This paragraph would be removed, since it contains restrictions which are not necessary to safeguard the quality of peanuts for human consumption. Appropriate safeguard measures are provided in proposed replacement provisions discussed below.

The corresponding paragraph in § 997.20 of the non-signer regulation, is paragraph (h)—which also would be removed for the reason cited. Paragraph (i) of the non-signer regulations would be retained because that paragraph applies to producer/handlers handling peanuts of their own production. This paragraph provides that such farm-stored peanuts must meet the requirements of the non-signer regulation. Paragraph (i) of the non-signer incoming regulation would be retained and redesignated as paragraph (g) in § 997.20.

The import regulation does not have a paragraph corresponding specifically to the Agreement's paragraph (j) on animal feed. The topic is addressed in paragraph (e) of the outgoing regulations, the removal of which is discussed below.

Outgoing Regulations

Paragraph (a) of *§ 998.200 Outgoing quality regulation* provides that peanut lots meeting the Indemnifiable Grade requirements in Table 2 do not have to be tested and certified as negative to aflatoxin. The Committee recommended modification of this requirement to provide that all lots (including Indemnifiable Grade lots) intended for human consumption be chemically tested and certified ''negative'' as to aflatoxin content. This change would make the Agreement regulations consistent with current industry practice. Most, if not all, buyers require that all peanuts for human consumption be certified negative as to aflatoxin. This proposed amendment would, therefore, have a twofold purpose. It would codify a practice which is common in the industry, and would ensure that the regulations effectuate the objectives of the Agreement.

Under the current outgoing regulation, peanut lots meeting the grade requirements of Table 1, Other Edible Quality, must be certified negative to aflatoxin prior to shipment to the buyer. This requirement would not be changed. Under current industry practice, Indemnifiable Grade peanut lots may be chemically tested and certified while the lot is in transit to the buyer. This practice could be continued under the proposed procedures and the actual transfer of lot ownership would not normally occur until certification has been received by the handler. A shorter turn-around time for chemical analysis is now possible with current testing practices and equipment, overnight and express mail services, and fax transmissions.

The Committee recommended that the regulatory language affecting this change should be added to the regulatory text of paragraph (a) after Table 2. However, the Department proposes revising paragraph (a) between Table 1 and Table 2. The proposed, revised text of paragraph (a) more clearly specifies the intent of the Committee's recommendation, and removes current text that some consider misleading of the industry's common practices. Additional conforming changes would be made to the paragraph.

Paragraphs (a)(1) (i) and (ii) in § 997.30 of the non-signer regulation and paragraphs (c)(1) (i) and (ii) in § 999.600 of the import regulation correspond to paragraph (a) in § 998.200 of the signer regulation. Both sets of paragraphs would be revised for the reasons cited above and to correspond with the proposed changes to the Agreement's outgoing regulation.

The Committee recommended changing the title of paragraph (c) *Pretesting shelled peanuts* of § 998.200. The new title is proposed to be *Sampling and testing shelled peanuts* to include the sampling process which comprises a significant part of the current paragraph. As a conforming change, the beginning of the first sentence of revised paragraph (c) would be changed to add the words ''Prior to shipment,* * *.'' Also, the first paragraph is proposed to be numbered (c)(1) because a paragraph (c)(2) is cited in the Code of Federal Regulations. Paragraph (c) is otherwise unchanged.

A conforming change would be made to the title of corresponding paragraph (c) of the non-signer regulation. No conforming change is necessary in the import regulation. A conforming change also would be made to non-signer paragraph (c)(2) which currently specifies that handlers shall cause samples to be ground by the inspection service prior to shipment. The revised paragraph would provide that the non-signer handler shall cause the sample to be ground for testing.

Paragraph (c)(4) of § 998.200 specifies the maximum allowable aflatoxin content for edible peanut lots as 15 parts per billion (ppb). Such lots are certified as ''negative'' to aflatoxin. Paragraph (c)(4) also specifies a ''negative'' content for inedible peanut lots as 25 ppb or less. Under the current regulation, failing lots with aflatoxin content in excess of 15 ppb but 25 ppb or less are considered ''unrestricted,'' which means the peanuts can be used in certain non-human consumption peanut outlets such as animal feed, wildlife feed, etc. ''Unrestricted'' use may provide more of a financial return for handlers while not posing a food safety threat to consumers. Peanut lots with aflatoxin content of more than 25 ppb are certified as ''restricted'' and can only be crushed for oil or exported. Aflatoxin certificates from USDA and private laboratories specify unrestricted lots as ''negative'' and usually do not include the numerical count of the lot's aflatoxin content. Currently, restricted lot certificates must cite the numerical aflatoxin count of the failing lot.

The Committee's recommendations to revise paragraph (h) and remove paragraphs (j) and (l) of § 998.200 would remove, among other things, procedures relevant to ''unrestricted'' and ''restricted'' lots of peanuts. Restrictions on the disposition of failing peanut lots would be relaxed under the proposed rule. Failing lots of peanuts composed on LSKs, fall through and pickouts from initial shelling operations would be limited to crushing or export unless certified as to aflatoxin content. If so certified, the lots could go to other non-edible uses. Other failing lots and residuals from blanching and remilling also could be sold to any buyer provided that the lot is positive lot identified (PLI), certified as to aflatoxin content, and in specified containers. Therefore, there is no reason to retain the phrase in paragraph (c)(4) of § 998.200 that specifies 25 ppb or less as ''negative'' to aflatoxin for inedible peanuts. Such a requirement would only cause confusion under the proposed regulations.

Further, the proposed replacement paragraphs ((f), (g), and (h) of § 998.200) would require that failing lots be ''certified as to aflatoxin content''—which means a numerical count rather than a general term covering a ppb spread from 16 to 26 ppb under current practice. For these reasons, the Department proposes removing reference to 25 ppb or less as ''negative'' for inedible peanuts. For peanut lots testing more than 15 ppb, the aflatoxin certificate would be required to show the lot's numerical aflatoxin count.

Currently, peanut lots meeting human consumption requirements may be certified as ''negative'' to aflatoxin—meaning that the chemical analysis shows the peanuts have 15 ppb or less aflatoxin content. The chemical analysis certificates for such lots usually are certified as ''negative as to aflatoxin for edible peanuts'' (or similar language). The certificates do not have to specify the numerical aflatoxin count of the lot.

If this proposed rule becomes effective, USDA and private aflatoxin laboratories would specify the numerical aflatoxin content on certificates issued on inedible peanut lots testing more than 15 ppb. Aflatoxin certificates on lots which fail grade requirements but are tested at 15 ppb or less, would be certified as ''negative to aflatoxin'' for inedible peanuts. Non-signer and imported peanut lots meeting edible requirements would also be required to be certified as negative to aflatoxin.

In the non-signer regulations, a corresponding change would be made to paragraph (a)(2) of § 997.30. In the import regulation, paragraph (f)(3) establishes the restricted category of inedible peanuts as more than 25 ppb aflatoxin content. That paragraph would be removed for the reasons cited above and to correspond with other recommendations of the Committee.

Paragraph (d) *Identification* of § 998.200 is proposed to be amended by adding a clause in the first sentence establishing the maximum lot size as 200,000 pounds. The maximum limit specification occurs elsewhere in the Agreement's regulatory language and is proposed to be added here for consistency and clarity. The phrase would be removed elsewhere in the Agreement regulations, but would apply to all sampling situations.

In the non-signer regulation, section § 997.50 applies to identification, among other topics. While the maximum lot size is specified elsewhere in the regulations, the same sentence added to paragraph (d) of § 998.200 is added to *§ 997.50 Inspection, chemical analysis, certification and identification.*

In the import regulation, paragraph (d)(3)(ii) in § 999.600 already specifies the 200,000 pound maximum lot size for farmers stock, shelled, and cleaned-inshell peanuts for sampling purposes.

Paragraph (f) *Interplant transfer* of § 998.200 was revised last year and currently provides that peanut lots may be transferred to any handler or storage without PLI and certification, and that, upon disposition for human consumption such transferred peanuts must meet edible requirements. This paragraph is consistent with the Committee's intention to remove provisions which restrict movement and increase costs of handling peanuts. As long as any lot of peanuts intended for human consumption are required to be sampled and meet outgoing quality requirements and are PLI, any additional requirements on the transfer of peanuts between a handler's plants, that do not affect outgoing quality, are irrelevant. Further, handlers would be required to keep records of all such transfers.

In the non-signer regulation, paragraph (f) covers the transfer of non-signer peanuts between plants. This paragraph would be removed (as discussed below).

The import regulation does not have corresponding requirements on the transfer of imported peanuts between plants, and, therefore, no conforming change is necessary for that program.

Disposition of Failing Quality, Inedible Peanuts

Finally, the Committee recommended streamlining § 998.200 by removing 16 paragraphs covering disposition requirements and procedures concerning inedible (failing quality) peanuts used for research projects, wildlife feed, rodent bait, chemically treated seed, fragmented export, meal from crushing, and animal feed. The paragraphs proposed to be removed from § 998.200 are:

(1) Paragraph (g)(1): defining LSKs, fall through, and pickouts and inedible quality peanuts;

(2) paragraph (g)(2): keeping such peanuts separate and apart from other peanuts;

(3) paragraph (g)(3): disposing of such peanuts to research projects, wildlife feed, rodent bait, chemical treatment for seed, and export to countries other than Canada and Mexico, designations of restricted and unrestricted failing lots, and limiting disposition of meal from crushing;

(4) paragraph (g)(4) specifying further requirements on the transfer of inedible peanuts;

(5) paragraph (h)(1) specifying further requirements on identifying and reporting the transfer of inedible peanuts;

(6) paragraph (h)(3) specifying further requirements regarding the disposition of failing quality Segregation 1 peanuts to specified outlets;

(7) paragraph (i)(1) specifying disposition of seed peanuts and seed residuals;

(8) paragraph (i)(2) specifying the chemical treatment of seed peanuts;

(9) paragraph (j)(1) specifying requirements on commingling and disposition of Segregation 2 and 3 peanuts;

(10) paragraph (j)(2) specifying further requirements on commingling and disposition of Segregation 2 and 3 peanuts;

(11) paragraph (k)(1) regulating the exportation of Segregation 1 peanuts;

(12) paragraph (k)(2) specifying further requirements on the disposition of Segregation 1 peanuts to inedible outlets;

(13) paragraph (l)(1) regarding the unrestricted disposition of shelled peanuts;

(14) paragraph (l)(2) regarding the restricted disposition of shelled peanuts;

(15) paragraph (m)(1) specifying requirements for the disposition of shelled peanuts for domestic animal feed; and (16) paragraph (m)(2) specifying coloring or dyeing and other requirements for disposition as domestic animal feed.

The proposed changes include removal of paragraphs (j) and (k) from § 998.200. These paragraphs address disposition requirements for farmers stock peanuts. The Committee believes that these two paragraphs would no longer be needed because current paragraph (f) *Oilstock* of § 998.100 Incoming quality regulations provides that handlers may acquire Segregation 2 and 3 peanuts for crushing or export and that the Area Association supervise such dispositions. Handlers may not acquire Segregation 2 or 3 peanuts for purposes other than crushing or export. Handlers may also acquire for crushing or export peanuts originating from Segregation 1 farmers stock which are milled and fail human consumption quality and are PLI.

Paragraph (j)(3) of the outgoing regulation provides handlers with exemption from assessments for acquisitions of Segregation 2 and 3 peanuts used for crushing or export. The Committee intends that the assessment exemption for such peanuts should remain in effect, but did not specifically discuss retention of the paragraph.

Paragraph (j)(3) was added to the regulatory language last year (60 FR 36208, July 14, 1995) to make clear the provisions of §§ 998.31 and .48 of the Agreement. Because paragraph (j)(3) is relatively new in the regulatory text, and because a corresponding provision in the non-signer regulation is required, the Department proposes that the exemption for Segregation 2 and 3 peanuts acquired for oilstock or export remain in the regulation. The exemption paragraph would be redesignated as paragraph (i) in § 998.100 of the incoming regulation, and revised to remove the references to the removed paragraphs (j)(1) and (j)(2) in § 998.200.

A relaxation also is recommended by the Committee in the current blanching (h)(2) and remilling (h)(4) paragraphs. These provisions prohibit the blanching or remilling of peanut lots which exceed certain defect levels—10 percent total unshelled peanuts and damaged kernels, or 10 percent foreign material, and, for remilling, 10 percent fall through. The restrictions on the amount of damage and foreign material in out-of-grade lots would be removed so that handlers would have more opportunity to recondition failing lots. This would increase handler flexibility, reduce inspection and handling costs, and enable more peanuts to be reconditioned and shipped for human consumption. The Committee recommended that the restriction on 10 percent fall-through for remilling peanuts remain in effect. The non-signer and import regulations do not contain the same limitations on blanching and remilling of defective lots, so the corresponding paragraphs (§ 997.40(a) and § 999.600(f), respectively) in those regulations do not need to reflect this proposed change.

The Committee indicated that the present regulations are too restrictive and limit handlers' ability to recondition potentially edible peanuts. Further, as long as peanuts are required to meet the outgoing requirements, including negative aflatoxin certification, it should not matter from which categories the peanuts originated. The Committee recommended removal of many of the restrictions as proposed in this rule and the addition of appropriate safeguards, as discussed below. The Committee believes these safeguard requirements would help ensure that inedible peanuts do not end up in human consumption outlets.

The provisions covering peanut disposition would be replaced by two new paragraphs and revisions would be made in two existing paragraphs. New paragraphs (f) (1), (2) and (3) of the outgoing regulation would modify § 998.32 of the Agreement and specify disposition requirements for edible and non-edible peanut lots. New paragraph (g) would provide for disposition of inedible milled peanuts (''sheller oilstock residuals''). Proposed paragraph (h)(1) would cover the blanching of inedible peanuts (revised from current paragraph (h)(2)). Proposed paragraph (h)(2) would cover the remilling of inedible peanuts (revised from current paragraph (h)(4)).

The Committee believes that safeguard measures in the current regulations should be maintained in the proposed changes because peanut lots sent to human consumption outlets would still need to meet the quality requirements of paragraph (a) and be certified negative to aflatoxin. Peanuts which cannot be reconditioned (or which a handler chooses not to recondition) to meet outgoing quality requirements would continue to be required to be PLI, red tagged, and maintained in appropriate containers. If disposed of to inedible peanut outlets other than crushing or export, failing peanuts would be required to be certified as to aflatoxin content and that certification would accompany the lot to the inedible peanut outlet. Paragraph (f)(2) also would require that the shipping papers state that the peanuts are not to be used for human consumption. All inedible dispositions would be reported to the Committee.

In proposed paragraph (f)(3), failing quality peanuts not sent to such inedible outlets must be either crushed or exported as prescribed in new paragraph (g) or blanched or remilled pursuant to new paragraphs (h)(1) and (2), respectively. Segregation 2 and 3 farmers stock peanuts would be allowed to be milled for seed. This is a standard procedure for obtaining seed peanuts.

New paragraph (g) of § 998.200 would provide that peanuts and portions of peanuts which result from milling operations are identified as ''sheller oilstock residuals.'' Such peanuts may include loose shelled kernels, fall through, and pick-outs as defined in that paragraph and whole lots of failing peanuts that a handler may choose to crush or export. Under the proposed paragraph (g), sheller oilstock residuals which are certified as to aflatoxin content could be disposed of ''domestically,'' which means that the peanuts could be sent to an inedible peanut outlet pursuant to proposed paragraph (f)(2) or crushed for oil. To be sent to an inedible outlet, sheller oilstock residuals would have to be certified as to aflatoxin content. Such peanuts also could be exported. Seller oilstock residuals not certified as aflatoxin content could only be crushed or exported as specified in proposed paragraph (g). Further, the shipping papers accompanying such lots would specify that disposition limitation. All movement of sheller oilstock residuals would be reported to the Committee—which is consistent with current reporting requirements. However, the Department proposed to establish the following additional safeguard requirement to help ensure that inedible peanut lots are not disposed of to inappropriate inedible peanut outlets.

The Committee's recommended changes in this proposed rule would remove nearly all restrictions on handlers selling peanuts to inedible peanut outlets. To help ensure that peanut lots with excessively high aflatoxin content are not used in inedible outlets where aflatoxin contamination could be transferred to human consumption products, the Department proposes requiring that no peanut lot disposed to an inedible outlet, other than for crushing or export, could exceed 300 ppb aflatoxin content. The 300 ppb content ceiling is the maximum aflatoxin content recommended by the Food and Drug Administration (FDA) for peanuts used in animal (livestock) feed. To make this change, an additional paragraph (2) specifying the restriction would be added to the proposed sheller oilstock residual paragraph (g). Proposed paragraph (g) would be designated as (g)(1). The same provision would be added to the non-signer (§ 997.40(c)(2)) and import regulations (§ 999.600(e)(2)(ii)).

Thus, the affect of this proposed rule is to raise from 25 to 300 ppb aflatoxin content limit for failing peanut lots which can be disposed to inedible outlets. Under the proposed changes to the handling regulations, handlers would be allowed to recondition failing peanut lots, and would have more incentive to do so. Handlers would have the option of crushing a lot for oil or reconditioning the lot. Lots above 300 ppb aflatoxin content which are not economically beneficial to recondition would have to be crushed or exported. With current technologies, reconditioning should be possible for most all failing peanut lots. Whole and residual lots exceeding 300 ppb aflatoxin content could be commingled until sufficient volume is accumulated for crushing disposition.

According to the FDA, residuals from the reconditioning of lots exceeding 300 ppb and the meal from crushed lots exceeding 300 ppb should not be used as animal feed.

To increase peanut handlers and importers awareness of wholesome peanut uses, the Department includes in this preamble discussion a summary of FDA's recommended maximum aflatoxin content for domestic animal feed. This information is summarized from FDA's Compliance Policy Guides (Sec. 683.100) revised March 28, 1994. In that guide, FDA states that ''Action levels for aflatoxin in animal feed now apply also to peanut products (peanuts, peanut meal, peanut hulls, peanut skins and ground peanut hay).'' With regard to animal feeds, the FDA guide provides as follows:

—Peanut products intended for finishing (i.e., feedlot) beef cattle: Action level 300 ppb.
—Peanut products intended for finishing swine of 100 pounds or greater: Action level 200 ppb.
—Peanut products intended for breeding beef cattle, breeding swine, or mature poultry: Action level 100 ppb.
—Peanut products and feed ingredients intended for immature animals: Action level 20 ppb.
—Peanut products and other feed ingredients intended for dairy animals, for animal species or uses not specified above, or when the intended use is not known: Action level 20 ppb.

In the current regulations under the Agreement, inedible peanut lots certified at 26 or more ppb cannot be sent to certain inedible peanut outlets where the peanuts would not be subject to heating in the preparation for inedible use or for uses which would allow the aflatoxin to be passed to another food product entering human consumption channels. This is a food safety measure which helps prevent aflatoxin-contaminated peanut lots from being used in certain inedible outlets—such as dairy cattle feed where the aflatoxin could be passed to human consumption in the milk.

This proposed rule would change the certification protocols for inedible peanut lots. Currently, peanut lots which meet both grade quality (paragraph (a)) and aflatoxin requirements (15 ppb or less) are certified as ''negative as to aflatoxin for edible quality peanuts''—or similar language.

Further, lots failing grade requirements but which are certified as 25 or less ppb are currently certified as ''negative to aflatoxin for inedible peanuts.'' Under the proposal, peanut lots meeting both grade and aflatoxin requirements would continue to be certified as negative to aflatoxin for edible peanuts and the aflatoxin count would not be shown on the aflatoxin certificate.

For peanut lots which fail grade requirements but which meet aflatoxin requirements, the proposed rule would provide that the aflatoxin certificate show the aflatoxin count of the lot and state that the peanuts are inedible grade quality. The Department believes this would assist handlers in marketing inedible quality peanuts. For example, a lot which is inedible grade quality but tests as 5 ppb would be certified as ''inedible quality peanuts with 5 ppb aflatoxin content''—or similar language.

Finally, the proposed rule would provide that the aflatoxin certificate of any peanut lot which exceeds 15 ppb aflatoxin content, regardless of grade certification, would show the numerical count of aflatoxin content and state that the lot is inedible because of excessive aflatoxin content—or similar language. The certification protocols would be implemented by the USDA and PAC-approved laboratories and would be applied to signer, non-signer, and imported peanuts.

The Department also proposes changes to paragraph (h). In the proposed text for the revised blanching and remilling paragraphs, the phrase ''which originated from Segregation 1 peanuts'' was not included. No explanation was provided in the Committee meeting or meeting minutes as to the benefit of removing this important safeguard provision. The phrase, at the very least, serves as a reminder that only Segregation 1 peanuts may be shelled and sent to edible consumption outlets. Thus, the Department proposes re-inserting the phrase ''which originated from Segregation 1 peanuts'' in the blanching (h)(1) and remilling (h)(2) paragraphs proposed by the Committee.

Also, the Committee recommended that the titles of the revised blanching (h)(1) and remilling (h)(2) paragraphs include reference to Committee approved blanchers and remillers, respectively. However, the Department proposes removing the reference in the titles because the reference is not necessary.

In non-signer *§ 997.30 Outgoing regulation*, paragraphs (f) Transfer between plants and (g) Residuals from seed peanuts correspond to the same topics covered in the Agreement's outgoing regulation, and would be removed, accordingly. The subject matter in the two paragraphs would be replaced with a revised *§ 997.40 Reconditioning and disposition of peanuts failing quality requirements.* Current § 997.40 covers certain outgoing requirements corresponding to those in the Agreement's § 998.200. Paragraphs (a)(1) and (2) of § 997.40 covers remilling and blanching of inedible shelled peanuts. These two paragraphs would be revised, and the order reversed, to conform with the Committee's recommended revised blanching and remilling paragraphs (h)(1) and (2). However, the paragraphs are not identical to the Agreement provisions because non-signers are not required to receive Department approval prior to moving a failing shelled lot to a blancher or remiller. Also, the non-signer regulations do not limit remilling and blanching to Committee approved remillers, blanchers or exporters. Therefore, those requirements are not included in the proposed revised non-signer blanching and remilling paragraphs.

The provisions of current non-signer paragraph (a)(3) of § 997.40 covering the ownership of peanuts moved for custom blanching or remilling, and the certification and reporting of such peanuts, are included in the revised § 997.40 blanching and remilling paragraphs (d)(1) and (2), and would be deleted in this proposed rule. Likewise, the contents of current paragraph (a)(4) on the bagging, red tagging and disposition of blanched and remilled peanuts are included in the revised § 997.40(d)(1) and (2). This would make the non-signer blanching and remilling paragraphs conform with the Agreement's revised blanching and remilling paragraphs.

Four paragraphs in § 997.40(b) *Disposition of shelled peanuts failing quality requirements for human consumption* cover the various disposition procedures and outlets for failing quality, inedible peanuts. These requirements would remain the same as, but organized and worded differently from, the Agreement's § 998.200 requirements in paragraphs (g) through (m)—most of which would be removed and replaced as described above. The provisions removed from paragraph (b) of § 997.40 are:

(1) Paragraph (b)(1) regulating the disposition of shelled peanuts to unrestricted crushing, fragmenting or dyeing, export, animal feed, wildlife feed, and rodent bait;

(2) paragraph (b)(2) specifying further requirements for disposition to animal feed (coloring or dyeing, PLI, valid aflatoxin certification, and reporting);

(3) paragraph (b)(3) regulating the disposition of shelled peanuts to restricted crushing, and export;

(4) paragraph (b)(4) regulating the disposition of Segregation 2 and 3 farmers stock peanuts to restricted and

unrestricted meal, crushing and export; and

(5) paragraph (b)(5) specifying reporting requirements for LSKs, fall through, and pickouts.

These paragraphs would be removed for the same reasons and to correspond with the proposed changes to the Agreement's outgoing regulation.

Paragraph (b)(6) of § 997.40 would be retained because it exempts from assessments, Segregation 2 and 3 farmers stock peanuts acquired by non-signatory handlers for crushing or export. The corresponding paragraph in the Agreement is retained and redesignated in this proposed rulemaking. Therefore, such Segregation 2 and 3 peanuts acquired by non-signatory handlers also would continue to be exempt from assessments. Paragraph (b)(6) would be revised and redesignated as paragraph (b) under *§ 997.51 Assessments* and the existing text in § 997.51 would be redesignated as paragraph (1).

There is no authority to assess imported peanuts.

Several changes would be made to the import regulation regarding disposition of inedible peanuts. Paragraph (c)(3) of § 997.40 would be moved and replace current paragraph (e). To make the same changes to the import regulation, the provisions in paragraphs (e) and (f) would be revised and placed under new paragraph (e), and paragraphs (g) and (h) would be redesignated as (f) and (g), respectively.

New paragraph (e)(1) of § 999.600 provides an overview for reconditioning imported lots. New paragraph (e)(2) covers failing lots disposed of to inedible uses such as animal feed, wildlife feed, seed peanuts and meal, which are currently regulated under paragraphs (e) and (f). Dispositions to these inedible outlets would be required to be positive lot identified with red tags, bagged, and the bill of lading would state that the peanuts could not be used for human consumption. This proposal would remove all references to ''restricted'' and ''unrestricted'' failing peanuts and the limitations on the disposition of restricted and unrestricted lots.

Proposed new paragraph (e)(3) of the import regulation would cover disposition of failing quality peanuts (''sheller oilstock residuals'') to crushing or export. Peanuts covered under the new (e)(3) would be primarily loose shelled kernels, fall through and pickouts from milling operations, but may also include any other failing lot that an importer chooses to crush or export. Identification, certification and labeling requirements are the same as those in corresponding paragraphs proposed for the Agreement.

New paragraph (e)(4) would specify reporting requirements for inedible lots pursuant to the reporting requirements in the safeguard procedures.

Finally, a paragraph would be added at the end of the regulations under the Agreement text which would specify that certain records would be required to be maintained pursuant to § 998.43 of the Agreement. These records would pertain to peanuts which are not certified for human consumption. In addition to maintaining certain records, the Agreement provides that all records would be made available to Committee staff and to representatives of the Secretary, as is necessary to document compliance with Agreement regulations. The additional provision does not represent an increase in the number of forms handlers and importers would have to complete, report, or maintain under the program.

No corresponding changes are necessary in the non-signer and import regulations. However, in *§ 997.52 Reports of acquisition and shipments* and elsewhere in the non-signer regulation, references regarding specific Fruit and Vegetable Division form numbers are proposed to be replaced with a more generic statement ''forms provided by the Division.'' This would enable the Department to revise and reduce the number of forms without additional rulemaking expense.

The unchanged portions of the incoming and outgoing regulations currently in effect for 1995 and subsequent crop peanuts would remain in effect for 1996 and subsequent crop peanuts.

Additional Change to § 999.600 Import Regulation

Early Entry and Bonded Storage Pending New Quota

Experience shows that some importers continue to ship peanuts to the U.S. even after the duty-free quota is filled for one year. The peanuts are sampled and inspected when off-loaded at the port and then sent inland to Customs Service bonded warehouses where the peanuts are stored until the opening of the next yearly quota—which could be as long as 11 months. New crop peanuts from Argentina, for instance, may be harvested as early as May or June but may arrive in the U.S. too late to be included in that year's quota. Such peanuts could be placed in bonded storage awaiting the next quota year beginning the following April.

The Department has determined that the grade and aflatoxin certificates issued on such peanuts upon arrival in May, June, or later, of one quota year should continue to be valid until the following quota year. This is consistent with the Agreement which does not place any time limits on the applicability of grade and aflatoxin inspection certificates.

However, paragraph (e) *Reinspection* of § 998.200 provides that if the Committee has reason to believe that peanuts may have been damaged or deteriorated while in storage, it may reject the then effective inspection certificate and require a reinspection. The Department exercises similar oversight of imported peanuts to ensure that only wholesome peanuts enter human consumption channels. Because of the possibility of deterioration while in storage, the Department needs to know which peanut shipments are held in bonded storage for an extended period of time, so that the wholesomeness of such peanuts could be verified when removed from storage. Therefore, the Department proposes that an additional safeguard measure, new paragraph (f)(6) be added to the import regulation.

The proposal would require that importers report to AMS peanut shipments which are sampled, inspected, and held in bonded storage in excess of a stated period of time. Such time would be set at one month in this proposal. AMS seeks comments as to whether or not one month is appropriate. The report would be filed pursuant to paragraphs (f)(2) and (3) of this section at the time of inspection and entry into a bonded warehouse for storage. The report would include copies of Customs Service documentation of the lot, the grade and aflatoxin certificates, and location of the storage warehouse.

To avoid deterioration, peanuts should be stored in clean, dry, odor free, warehouses and under sanitation and cold storage conditions consistent with industry standards. While the Agreement does not require cold storage conditions, the following points should be used as a cold storage guide:

—Temperatures should range from 34 to 41 degrees Fahrenheit with a relative humidity of 55 to 70 percent.

—Daily or weekly recording charts of temperature and humidity should be maintained.

—Interior air circulation should be adequate to maintain uniform temperatures.

—Pans under refrigeration equipment should prevent condensation from dripping onto the peanuts.

—Peanuts should be gradually removed from cold storage over 2 to 3 days.

This and other information on sanitation, facilities, management practices, and dry storage is taken from *Good Management Practices for Shelled Goods Cold Storage and Shelled Goods Dry Storage* distributed by the National Peanut Council. Copies are available for a nominal price to non-members by calling (703)–838–9500.

Imported peanut lots certified as meeting human consumption requirements and subsequently stored under such conditions and in appropriate warehouses, may be entered for consumption when the next quota year begins—without further reporting to AMS. Upon filing for entry, the importer shall certify in writing to the Customs Service that the peanuts covered by the entry documentation have been stored consistent with industry standards for the entire length of the storage period.

Paragraph (b)(4) of the import regulation provides authority for the Secretary to require a reinspection of an imported peanut lot. If the documentation provided to AMS, or if any evidence subsequently received by AMS, indicates that appropriate storage standards have not been met or maintained and the peanuts may have been damaged or deteriorated, the Secretary could demand reinspection of the lot prior to the importer's filing for consumption entry of the lot.

Paragraph (b)(4) of § 999.600 is currently placed in the import rule's Incoming quality regulation. However, reinspections are more likely to be needed when shelled peanuts are placed under bonded storage several months prior to the beginning of the next quota year, as discussed above. Therefore, the Department proposes to redesignate it as paragraph (f)(5) Reinspection in the import regulation. As a safeguard provision, the paragraph will apply to farmers stock, shelled, and inshell imported peanuts. The intent and requirements of the paragraph remain unchanged.

Some paragraphs of the three peanut regulations would not be changed in this proposal. However, for a better understanding of the proposed changes, the three regulations are published in their entirety as proposed, including paragraphs which are not changed.

If adopted, the proposed changes to the signer and non-signer programs should be in effect as soon as possible to cover as much of the crop year as possible. Thus, a 20-day (rather than 30-day) comment period is provided to allow interested persons to respond to this proposal. All written comments timely received will be considered before a final determination is made in this matter.

Because this proposed rule will not be implemented before the beginning of the 1996 domestic crop year, comments are also requested on whether final implementation of this proposal after the beginning of the crop year would have an unequal effect on one or more of the three production areas or unequally affect small or large handlers.

List of Subjects

7 CFR Part 997

Food grades and standards, Peanuts, Reporting and recordkeeping requirements.

7 CFR Part 998

Marketing agreements, Peanuts, Reporting and recordkeeping requirements.

7 CFR Part 999

Dates, Filberts, Food grades and standards, Imports, Nuts, Peanuts, Prunes, Raisins, Reporting and recordkeeping requirements, Walnuts.

For the reasons set forth in the preamble, 7 CFR parts 997, 998 and 999 are proposed to be amended as follows:

PART 997—PROVISIONS REGULATING THE QUALITY OF DOMESTICALLY PRODUCED PEANUTS HANDLED BY PERSONS NOT SUBJECT TO THE PEANUT MARKETING AGREEMENT

1. The authority citation for 7 CFR part 997 continues to read as follows:

Authority: 7 U.S.C. 601–674.

2. Under the center heading ''Quality Regulations,'' §§ 997.20, 997.30, 997.40 and 997.50 are revised to read as follows:

Quality Regulations

§ 997.20 Incoming regulation.

(a) No handler shall receive or acquire peanuts intended for human consumption, either from a producer or other person, unless such peanuts are inspected pursuant to § 997.50 and are determined to be Segregation 1 peanuts at time of receipt from the producer or, if received from another person, had not been mixed with peanuts of a lower quality than Segregation 1 and meet the following additional requirements specified in this section: Provided, That a handler may—

(1) Acquire shelled peanuts from the Commodity Credit Corporation (CCC) or cleaned inshell or shelled peanuts from other handlers, a handler as defined in 7 CFR 998.8, or from buyers who have purchased such peanuts from handlers or from the CCC, if the lot has been certified as meeting the requirements of § 997.30(a) and the identity is maintained; and/or

(2) Perform services for an area association pursuant to a peanut receiving and warehouse contract.

(b) *Moisture and foreign material.* (1) *Moisture.* Except as provided under paragraph (d) of § 997.20, no handler shall receive or acquire peanuts containing more than 10.49 percent moisture: *Provided,* That peanuts of a higher moisture content may be received and dried to not more than 10.49 percent moisture prior to storing or milling. For farmers stock peanuts, moisture determinations shall be rounded to the nearest whole number. Moisture determinations on shelled peanuts shall be carried to the hundredths place.

(2) *Foreign material.* No handler shall receive or acquire farmers stock peanuts containing more than 10.49 percent foreign material, except that peanuts having a higher foreign material content may be received or acquired if they are held separately until milled, or moved over a sand-screen before storage, or shipped directly to a plant for prompt shelling. The term *sand-screen* means any type of farmers stock cleaner which, when in use, removes sand and dirt.

(c) *Damage.* For the purpose of determining damage, other than concealed damage, on farmers stock peanuts, all percentage determinations shall be rounded to the nearest whole number.

(d) *Seed peanuts.* Peanuts which are not Segregation 1 peanuts and therefore cannot be acquired for human consumption may be acquired, shelled and delivered for seed purposes. Peanuts intended for seed use, produced under the auspices of a State agency which regulates or controls the production of seed peanuts, which do not meet Segregation 1 requirements shall be stored and shelled separate from peanuts intended for human consumption. However, Segregation 2 seed peanuts, produced under the auspices of the State agency, which contain up to 3.00 percent damaged kernels and are free from visible *Aspergillus flavus* may be stored and shelled with Segregation 1 peanuts which are also produced under the auspices of the State agency. A handler whose operations include custom seed shelling may receive, custom shell, and deliver for seed purposes farmers stock peanuts, and such peanuts shall be exempt from the requirements of this section and, therefore, shall not be required to be inspected and certified as meeting these requirements, and the

handler shall report to the Division the weight of each lot of farmers stock peanuts received on such basis on a form provided by the Department. However, handlers who acquire seed peanut residuals from their custom shelling of uninspected (farmers stock) seed peanuts or from another person may mill such residuals with other receipts or acquisitions of the handler, and such peanuts which meet the requirements specified in § 997.30(a) may be disposed of by sale to human consumption outlets.

(e) *Oilstock.* Handlers may acquire for disposition to domestic crushing or export farmers stock peanuts of a lower quality than Segregation 1 or grades or sizes of shelled peanuts or cleaned inshell peanuts which fail to meet the requirements for human consumption. Handlers may act as accumulators and acquire, for other handlers; a handler as defined in 7 CFR 998.8 or from other persons, Segregation 2 or 3 farmers stock peanuts. Handlers may also acquire shelled peanuts originating from Segregation 2 or 3 farmers stock or the entire mill production of peanuts from Segregation 1 farmers stock or lots of shelled peanuts originating from Segregation 1 peanuts and which have been positive lot identified as specified in § 997.30(d), which failed to meet the requirements for human consumption pursuant to § 997.30(a): *Provided,* That all such acquisitions are held separate from Segregation 1 peanuts acquired for milling or from edible grades of shelled or milled peanuts. Handlers may commingle the Segregation 2 and 3 peanuts or keep them separate and apart. Handlers who acquire farmers stock peanuts of a lower quality than Segregation 1 or cleaned inshell peanuts which fail to meet the requirements for human consumption shall report such acquisitions to the Division as prescribed on a form prescribed by the Division. Handlers who acquire grades or sizes of shelled peanuts which fail to meet the requirements for human consumption for disposition to domestic crushing and subsequent export to countries shall report such disposition on a form provided by the Division.

(f) *Shelled peanuts.* Handlers may acquire shelled peanuts (which originated from ''Segregation 1 peanuts'') from other handlers or a handler as defined in 7 CFR 998.8, for remilling and subsequent disposition to human consumption outlets. Further disposition of such peanuts shall be regulated by § 997.40.

(g) No producer may handle, process, prepare for sale, or otherwise alter peanuts of his own production from the condition of farmers stock, for disposition in human consumption outlets unless such peanuts are first inspected and certified pursuant to § 997.50 and meet the applicable requirements of this section.

§ 997.30 Outgoing Regulation.

(a) *Shelled peanuts.* (1)(i) No handler shall ship or otherwise dispose of shelled peanuts for human consumption unless such peanuts are positive lot identified, certified ''negative'' as to aflatoxin and certified as meeting the requirements in Table 1:

TABLE 1.—MINIMUM GRADE REQUIREMENTS—PEANUTS FOR HUMAN CONSUMPTION

[Whole Kernels and Splits]

Maximum limitations							
Excluding lots of ''splits''							
Type and grade category	Unshelled peanuts and damaged kernels (percent)	Unshelled peanuts damaged kernels and minor defects (percent)	Fall through		Total	Foreign materials (percent)	Moisture (percent)
			Sound split and broken kernels	Sound whole kernels			
Runner	1.50	2.50	3.00%; 17/64 inch round screen.	3.00%; 16/64 x 3/4 inch; slot screen.	4.00%; both screens.	.20	9.00
Virginia (except No. 2)	1.50	2.50	3.00%; 17/64 inch; round screen.	3.00%; 15/64 x 1 inch; slot screen.	4.00%; both screens.	.20	9.00
Spanish and Valencia	1.50	2.50	3.00%; 16/64 inch; round screen.	3.00%; 15/64 x 3/4 inch; slot screen.	4.00%; both screens.	.20	9.00
No. 2 Virginia	1.50	3.00	6.00%; 17/64 inch; round screen.	6.00%; 15/64 x 1 inch; slot screen.	6.00%; both screens.	.20	9.00
Lots of ''splits''							
Runner (not more than 4% sound whole kernels).	1.50	2.50	3.00%; 17/64 inch; round screen.	3.00%; 14/64 x 3/4 inch; slot screen.	4.00%; both screens.	.20	9.00
Virginia (not less than 90% splits).	1.50	2.50	3.00%; 17/64 inch; round screen.	3.00%; 14/64 x 1 inch; slot screen.	4.00%; both screens.	.20	9.00
Spanish and Valencia (not more than 4% sound whole kernels).	1.50	2.50	3.00%; 16/64 inch; round screen.	3.00%; 13/64 x 3/4 inch; slot screen.	4.00%; both screens.	.20	9.00

(ii) Prior to disposition to human consumption outlets, peanuts must be positive lot identified, be certified ''negative'' as to aflatoxin, and be certified as meeting the following superior quality requirements in Table 2:

TABLE 2.—SUPERIOR QUALITY REQUIREMENTS—PEANUTS FOR HUMAN CONSUMPTION

[Whole Kernels and Splits]

Type and grade category	Maximum limitations						
	Unshelled peanuts and damaged kernels (percent)	Unshelled peanuts, damaged kernels and minor defects (percent)	Sound split and broken kernels (percent)	Sound whole kernels (percent)	Total	Foreign materials (percent)	Moisture (percent)
Runner U.S. No. 1 and better.	1.25	2.00	3.00%; 17/64 inch, round screen.	3.00%; 16/64 x 3/4 inch, slot screen.	4.00%; both screens.	.10	9.00
Virginia U.S. No. 1 and better.	1.25	2.00	3.00%; 17/64 inch, round screen.	3.00%; 15/64 x 1 inch, slot screen.	4.00%; both screens.	.10	9.00
Spanish and Valencia U.S. No. 1 and better.	1.25	2.00	3.00%; 16/64 inch, round screen.	2.00%; 15/64 x 3/4 inch, slot screen.	4.00%; both screens.	.10	9.00
Runner U.S. Splits (not more than 4% sound, whole kernels).	1.25	2.00	2.00%; 17/64 inch, round screen.	3.00%; 14/64 x 3/4 inch, slot screen.	4.00%; both screens.	.20	9.00
Virginia U.S. Splits (not less than 90% splits and not more than 3.00% sound whole kernels and portions passing through 20/64 inch round screen).	1.25	2.00	3.00%; 17/64 inch, round screen.	3.00%; 14/64 x 1 inch, slot screen.	4.00%; both screens.	.20	9.00
Spanish and Valencia U.S. Splits (not more than 4% sound, whole kernels).	1.25	2.00	2.00%; 16/64 inch, round screen.	3.00%; 13/64 x 3/4 inch, slot screen.	4.00%; both screens.	.20	9.00
Runner with splits (not more than 15% sound splits).	1.25	2.00	3.00%; 17/64 inch, round screen.	3.00%; 16/64 x 3/4 inch, slot screen.	4.00%; both screens.	.10	9.00
Virginia with splits (not more than 15% sound splits).	1.25	2.00	3.00%; 17/64 inch, round screen.	3.00%; 15/64 x 1 inch, slot screen.	4.00%; both screens.	.10	9.00
Spanish and Valencia with splits (not more than 15% sound splits).	1.25	2.00	3.00%; 16/64 inch, round screen.	2.00%; 15/64 x 3/4 inch, slot screen.	4.00%; both screens.	.10	9.00

(2) The term ''fall through'', as used herein, shall mean sound split and broken kernels and whole kernels which pass through specified screens. Prior to shipment, appropriate samples for pretesting shall be drawn in accordance with paragraph (c) of this section from each lot of Superior Quality peanuts. For the current crop year, ''negative'' aflatoxin content means 15 parts per billion (ppb) or less for peanuts which have been certified as meeting edible quality grade requirements.

(b) *Cleaned inshell peanuts.* No handler shall ship, sell, or otherwise dispose of cleaned inshell peanuts for human consumption:

(1) With more than 1.00 percent kernels with mold present unless a sample of such peanuts, drawn by an inspector of the Federal or Federal-State Inspection Service, was analyzed chemically by a U.S. Department of Agriculture laboratory (hereinafter referred to as ''USDA laboratory'') or a laboratory listed in paragraph (c) of this section and found to be wholesome relative to aflatoxin;

(2) With more than 2.00 percent peanuts with damaged kernels;

(3) With more than 10.00 percent moisture; or

(4) With more than 0.50 percent foreign material.

(c) *Sampling and testing shelled peanuts.* (1) Each handler shall cause appropriate samples of each lot of edible quality shelled peanuts to be drawn by an inspector of the Federal or Federal-State Inspection Service. The gross amount of peanuts drawn shall be large enough to provide for a grade analysis, for a grading check-sample, and for three 48-pound samples for aflatoxin assay. The three 48-pound samples shall be designated by the Federal or Federal-State Inspection Service as ''Sample #1N'', ''Sample #2N'', and ''Sample #3N'' and each sample shall be placed in a suitable container and ''positive lot identified'' by means acceptable to the Inspection Service. Sample #1N may be prepared for immediate testing or Sample #1N, Sample #2N, and Sample #3N may be returned to the handler for testing at a later date.

(2) The handler shall cause Sample #1 to be ground by the Federal or Federal-State Inspection Service, a USDA laboratory or a laboratory listed herein, in a ''subsampling mill'' approved by the Division. The resultant ground subsample from Sample #1N shall be of a size specified by the Division and shall be designated as ''Subsample 1—ABN'' and at the handler's or buyer's option, a second subsample may also be extracted from Sample #1N. It shall be designated as ''Subsample 1—CDN''. Subsample 1—CDN may be sent as requested by the handler or buyer, for aflatoxin assay, to a USDA laboratory or other laboratory that can provide analyses results on such samples in 36 hours. The cost of sampling and testing Subsample 1—CDN shall be for the account of the requester. Subsample 1—ABN shall be analyzed only in a USDA

laboratory or a laboratory listed herein. Both Subsamples 1—ABN and 1—CDN shall be accompanied by a notice of sampling signed by the inspector containing, at least, identifying information as to the handler (shipper), the buyer (receiver), if known, and the positive lot identification of the shelled peanuts. A copy of such notice covering each lot shall be sent to the Division.

(3) The samples designated as Sample #2N and Sample #3N shall be held as aflatoxin check-samples by the Inspection Service or the handler and shall not be included in the shipment to the buyer until the analyses results from Sample #1N are known.

(4) Upon call from the laboratory, handler shall cause Sample #2N to be ground by the Inspection Service in a ''subsampling mill.'' The resultant ground subsample from Sample #2N shall be of a size specified by the Division and it shall be designated as ''Subsample #2—ABN.'' Upon call from the laboratory, the handler shall cause Sample #3N to be ground by the Inspection Service in a ''subsampling mill.'' The resultant ground subsample from Sample #3N shall be of a size specified by the Division and shall be designated as ''Subsample #3—ABN''. ''Subsamples 2—ABN and 3—ABN'' shall be analyzed only in a USDA laboratory or a laboratory listed herein and each shall be accompanied by a notice of sampling. A copy of each such notice shall be sent to the Division. The results of each assay shall be reported by the laboratory to the handler and to the Division. All costs involved in the sampling and testing of peanuts required by this regulation shall be for the account of the applicant.

(5) Information on making arrangements for the required inspection and certification can be obtained by contacting the Fresh Products Branch, Fruit and Vegetable Division, Agricultural Marketing Service, USDA, P.O. Box 96456, room 2049–S, Washington, DC, 20090–6456, telephone (202) 690–0604 or facsimile (202) 720–0393.

(i) Laboratories at the following locations are approved to perform the chemical analyses required pursuant to this part. The sampling plan and procedures may be obtained from the Science Division.

Science and Technology Division, AMS/USDA, P.O. Box 279, 301 West Pearl St., Aulander, NC 27805, Tel: (919) 345–1661 Ext. 156, Fax: (919) 345–1991

Science and Technology Division, AMS/USDA, 1211 Schley Ave., Albany, GA 31707, Tel: (912) 430–8490 / 8491, Fax: (912) 430–8534

Science and Technology Division, AMS/USDA, P.O. Box 488, Ashburn, GA 31714, Tel: (912) 567–3703

Science and Technology Division, AMS/USDA, 610 North Main St., Blakely, GA 31723, Tel: (912) 723–4570, Fax: (912) 723–3294

Science and Technology Division, AMS/USDA, 1557 Reeves St., Dothan, AL 36303, Tel: (334) 794–5070, Fax: (334) 671–7984

Science and Technology Division, AMS/USDA, 107 South Fourth St., Madill, OK 73446, Tel: (405) 795–5615, Fax: (405) 795–3645

Science and Technology Division, AMS/USDA, P.O. Box 272, 715 N. Main Street, Dawson, GA 31742, Tel: (912) 995–7257, Fax: (912) 995–3268

Science and Technology Division, AMS/USDA, P.O. Box 1130, 308 Culloden St., Suffolk, VA 23434, Tel: (804) 925–2286, Fax: (804) 925–2285

ABC Research, 3437 SW 24th Avenue, Gainesville, FL 32607–4502, Tel: (904) 372–0436, Fax: (904) 378–6483

J. Leek Associates, Inc., P.O. Box 50395, 1200 Wyandotte (31705), Albany, GA 31703–0395, Tel: (912) 889–8293, Fax: (912) 888–1166

J. Leek Associates, Inc., P.O. Box 368, 675 East Pine, Colquitt, GA 31737, Tel: (912) 758–3722, Fax: (912) 758–2538

J. Leek Associates, Inc., P.O. Box 6, 502 West Navarro St., DeLeon, TX 76444, Tel: (817) 893–3653, Fax: (817) 893–3640

Pert Laboratories, P.O. Box 267, Peanut Drive, Edenton, NC 27932, Tel: (919) 482–4456, Fax: (919) 482–5370

Pert Laboratory South, P.O. Box 149, Hwy 82 East, Seabrook Drive, Sylvester, GA 31791, Tel: (912) 776–7676, Fax: (912) 776–1137

Professional Service Industries, Inc., 3 Burwood Lane, San Antonio, TX 78216, Tel: (210) 349–5242, Fax: (210) 342–9401

Southern Cotton Oil Company, 600 E. Nelson Street, P.O. Box 180, Quanah, TX 79252, Tel: (817) 663–5323, Fax: (817) 663–5091

Quanta Lab, 9330 Corporate Drive, Suite 703, Selma, TX 78154–1257, Tel: (210) 651–5799, Fax: (210) 651–9271

(ii) Handlers should contact the nearest laboratory from the list in paragraph (c)(5)(i) of this section to arrange to have samples chemically analyzed for aflatoxin content, or for further information concerning the chemical analyses required pursuant to this part handlers may contact: The Science and Technology Division, Agricultural Marketing Service, USDA, P.O. Box 96456, room 3507–S, Washington, D.C., 20090–6456, telephone (202) 720–5231, facsimile (202) 720–6496.

(d) *Identification*. Each lot of shelled or cleaned inshell peanuts, in lot sizes not exceeding 200,000 pounds, shall be identified by positive lot identification procedures prior to being shipped or otherwise disposed of. For the purpose of this regulation, ''positive lot identification'' of a lot of shelled or inshell peanuts is a means of relating the inspection certificate to the lot which has been inspected so that there can be no doubt that the peanuts are the same ones described on the inspection certificate. The crop year that is shown on the positive lot identification tags, or other means of positive lot identification shall accurately describe the crop year in which the peanuts in the lot were produced. Such procedure on bagged peanuts shall consist of attaching a lot numbered tag bearing the official stamp of the Federal or Federal-State Inspection Service to each filled bag in the lot. The tag shall be sewed (machine sewed if shelled peanuts) into the closure of the bag except that in plastic bags the tag shall be inserted prior to sealing so that the official stamp is visible. Any peanuts moved in bulk or bulk bins shall have their lot identity maintained by sealing the conveyance and if in other containers by other means acceptable to the Federal or Federal-State Inspection Service. All lots of shelled or cleaned inshell peanuts shall be handled, stored, and shipped under positive lot identification procedures, except those lots which have been reconstituted and/or commingled at the request of the receiver. All such reconstituted and/or commingled lots will no longer be considered positive lot identified and, therefore, no longer be eligible for appeal inspection. Handler shall keep and maintain records of the quantities involved in each reconstituting and/or commingling procedure, whether in single or multiple lots, and such records shall be available to the Division on request.

(e) *Reinspection*. Whenever the Division has reason to believe that peanuts may have been damaged or deteriorated while in storage, the Division may reject the then effective inspection certificate and may require the owner of the peanuts to have a reinspection to establish whether or not such peanuts may be disposed of for human consumption.

§ 997.40 Reconditioning and disposition of peanuts failing quality requirements.

(a) Lots of peanuts which have not been certified as meeting the requirements for disposition to human

consumption outlets, may be disposed of for non-human consumption uses which are not regulated or limited by the provisions specified in this section: *Provided,* That each such lot is positive lot identified, using red tags, and certified as to aflatoxin content (actual numerical count). However, on the shipping papers covering the disposition of each such lot of inedible quality peanuts, the handler shall cause the following statement to be shown: ''The peanuts covered by this bill of lading (or invoice, etc.) are not to be used for human consumption.''

(b) Except for inedible quality peanuts disposed of under the provisions of paragraph (f)(2) of this section and peanuts derived from the milling for seed of Segregation 2 and 3 farmers stock peanuts, peanuts which have not been certified as meeting the standards set forth in paragraphs (a) or (b) of § 997.30 shall be disposed of as prescribed hereinafter in this section.

(c) *Sheller Oil Stock Residuals—For Crushing or Export.* Peanuts, or portions of peanuts which are separated from edible quality peanuts by screening or sorting or other means during the milling process, may be segregated into categories or they may be commingled as sheller oil stock residuals. Such sheller oil stock residuals shall be identified pursuant to paragraph (d) of this section, but using a red tag, and such peanuts may be disposed of domestically or to the export market, in bulk or bags or other suitable containers. The movement of such peanuts shall be reported to the Division by the shipping handler and the crusher, as requested by the Division.

(1) If the peanuts have not been tested and certified as to aflatoxin content, as prescribed in paragraph (c) of this section, the handler shall cause the following statement to be shown on the shipping papers: ''The peanuts covered by this bill of lading (or invoice, etc.) are limited to crushing only and may contain aflatoxin.''

(2) If the peanuts are certified as 301 ppb or more aflatoxin content, disposition shall be limited to crushing or export.

(d) *Blanching peanuts failing quality requirements.* Handlers may blanch or cause to have blanched positive lot identified shelled peanuts, which originated from Segregation 1 peanuts, that fail to meet the requirements of paragraph (a) of this section because of excessive damage, minor defects, moisture, or foreign material or are positive as to aflatoxin. Lots of peanuts which are moved under these provisions must be accompanied by a valid grade inspection certificate and the title shall be retained by the handler until the peanuts are blanched and certified by an inspector of the Federal or Federal-State Inspection Service as meeting the requirements for disposal into human consumption outlets. To be eligible for disposal into human consumption outlets, such peanuts after blanching, must meet specifications for unshelled peanuts, damaged kernels, minor defects, moisture, and foreign material as listed in paragraph (a) of this section and be accompanied by a negative aflatoxin certificate. The residual peanuts, excluding skins and hearts, resulting from blanching under these provisions, shall be bagged and red tagged and disposition shall be that such peanuts are returned to the handler for further disposition; or, in the alternative, such residuals shall be positive lot identified by the Federal or Federal-State Inspection Service, and shall be disposed of, by the blancher to crushers who agree to comply with the terms of paragraph (c) of this section.

(e) *Remilling peanuts failing quality requirements.* Handlers may remiller or cause to have remilled shelled peanuts, which originated from Segregation 1 peanuts, that fail to meet the requirements for disposition to human consumption outlets heretofore specified in paragraph (a) of this section: *Provided,* That such lots of peanuts contain not in excess of 10 percent fall through. Lots of peanuts moved under these provisions must be accompanied by a valid grade inspection certificate and must be positive lot identified and the title of such peanuts shall be retained by the handler until the peanuts have been remilled and certified by the Federal or Federal-State Inspection-Service as meeting the requirements for disposition to human consumption outlets specified in paragraph (a) of this section, and be accompanied by a negative aflatoxin certificate. Remilling under these provisions may include composite remilling of more than one such lot of peanuts owned by the same handler. However, such peanuts owned by one handler shall be held and remilled separate and apart from all other peanuts. The residual peanuts resulting from remilling under these provisions, shall be bagged and red tagged and disposition shall be that such peanuts are returned to the handler for further disposition; or, in the alternative, such residuals shall be positive lot identified by the Federal or Federal-State Inspection Service, and shall be disposed of, by the remiller, to crushers who agree to comply with the terms of paragraph (c) of this section.

§ 997.50 Inspection, chemical analysis, certification and identification.

Each handler shall, at the handler's own expense, prior to or upon receiving and before shipping or disposing of peanuts, cause an inspection to be made of any such peanuts not covered by a valid inspection certificate, to determine whether such peanuts meet the applicable grade requirements effective pursuant to this part, and shall comply with such identification requirements prescribed by this part or which the Secretary may prescribe. Each handler shall also cause appropriate samples to be drawn and chemically analyzed by a USDA laboratory, or laboratory listed in § 997.30, for wholesomeness as provided in § 997.30 of this part. Such handler shall obtain grade and aflatoxin certificates stating that such peanuts meet the aforementioned applicable requirements and all such certificates shall be available for examination or use by the Division. Acceptable certificates shall be those issued by Federal or Federal-State inspectors authorized or licensed by the Secretary and USDA laboratories or those listed in § 997.30 of this part.

Each handler shall furnish, or cause the inspection service or the laboratory to furnish, to the Division, a copy of the inspection certificate and a copy of the results of the chemical analyses issued to the handler on each lot of shelled peanuts or cleaned inshell peanuts.

3. Under the center heading ''Assessments,'' section 997.51 is revised to read as follows:

§ 997.51 Assessments.

(a) Each first handler shall pay to the Secretary, with respect to Segregation 1 peanuts received or acquired by the handler, including the handler's own production, an administrative assessment as approved by the Secretary. The rate of assessment shall be the same as the administrative assessment approved by the Secretary and applied to signatory handlers under the Peanut Marketing Agreement No. 146. Such administrative assessment shall be applied during the crop year beginning July 1 and ending June 30 of the following year. Each handler's pro rata share shall be the rate of assessment fixed by the Secretary per net ton of farmers stock peanuts received or acquired, other than those peanuts described in § 997.20(a) (1) and (2). During the crop year, the Secretary may increase the rate of assessment if such an increase is established under the Agreement.

(b) Segregation 2 and Segregation 3 farmers stock peanuts disposed to

crushing or exported are exempt from assessments under this section.

4. Under the center heading ''Reports, Books and Records,'' §§ 997.52, 997.53 and 997.54 are revised to read as follows:

Reports, Books and Records

§ 997.52 Reports of acquisitions and shipments.

Each handler shall report acquisitions of Segregation 1 farmers stock peanuts on a form provided by the Division and file such other reports of acquisitions and shipments of peanuts, as prescribed in this part. Upon the request of the Division, each handler shall furnish such other reports and information as necessary to enable the Division to carry out the provisions of this part. All reports and records furnished or submitted by handlers to the Division which include data or information constituting a trade secret or disclosing the trade position, financial condition, or business operations of the particular handler shall not be disclosed unless such disclosure is determined necessary by the Secretary to enforce the provisions of this part.

§ 997.53 Verification of reports.

For the purpose of checking and verifying reports filed by handlers or the operation of handlers under the provisions of this part, the Secretary, through its duly authorized agents, shall have access to any premises where peanuts may be held by any handler and at any time during reasonable business hours and shall be permitted to inspect any peanuts so held by such handler and any and all records of such handler with respect to the acquisition, movement, holding, processing or disposition of all peanuts which may be held or which may have been disposed of by the handler. Each handler shall maintain such records of peanuts received, held, and disposed of by the handler, that will substantiate any required reports and will show performance under this part. Such records shall be retained for at least two years beyond the crop year of their applicability.

§ 997.54 Agents.

The Secretary may, by a designation in writing, name any person, including any officer or employee of the United States Government, or name any service, division or branch in the United States Department of Agriculture, to act as his agent or representative in connection with any of the provisions of this part.

PART 998—MARKETING AGREEMENT REGULATING THE QUALITY OF DOMESTICALLY PRODUCED PEANUTS

1. The authority citation for 7 CFR part 998 continues to read as follows:

Authority: 7 U.S.C. 601–674.

2. Under the center heading ''Implementing Regulations,'' §§ 998.100 and 998.200 are revised to read as follows:

Implementing Regulations

§ 998.100 Incoming quality regulation for 1996 and subsequent crop peanuts.

The following modify § 998.5 of the peanut marketing agreement and modify or are in addition to the restrictions of section 31 on handler receipts or acquisitions of peanuts:

(a) *Modification of § 998.5, paragraphs (b), (c), and (d).* Paragraphs (b), (c), and (d) of § 998.5 of the peanut marketing agreement are modified for the purposes of this section as to farmers stock peanuts to read respectively as follows:

(1) *Segregation 1. Segregation 1 peanuts* means farmers stock peanuts with not more than 2 percent damaged kernels nor more than 1.00 percent concealed damage caused by rancidity, mold, or decay and which are free from visible *Aspergillus flavus.*

(2) *Segregation 2. Segregation 2 peanuts* means farmers stock peanuts with more than 2 percent damaged kernels or more than 1.00 percent concealed damage caused by rancidity, mold, or decay and which are free from *visible Aspergillus flavus.*

(3) *Segregation 3. Segregation 3 peanuts* means farmers stock peanuts with *visible Aspergillus flavus.*

(b) *Moisture and foreign material.*

(1) *Moisture.* Except as provided under paragraph (d) of § 998.100, no handler shall receive or acquire peanuts containing more than 10.49 percent moisture: *Provided,* That peanuts of a higher moisture content may be received and dried to not more than 10.49 percent moisture prior to storing or milling. On farmer's stock, such moisture determinations shall be rounded to the nearest whole number; on shelled peanuts, the determinations shall be carried to the hundredths place and shall not be rounded to the nearest whole number.

(2) *Foreign material.* No handler shall receive or acquire farmers stock peanuts containing more than 10.49 percent foreign material, except that peanuts having a higher foreign material content may be received or acquired if they are held separately until milled, or moved over a sand-screen before storage, or shipped directly to a plant for prompt shelling. The term ''sand-screen'' means any type of farmers stock cleaner which, when in use, removes sand and dirt.

(c) *Damage.* For the purpose of determining damage, other than concealed damage, on farmers stock peanuts, all percentage determinations shall be rounded to the nearest whole number.

(d) *Seed peanuts.* A handler may acquire and deliver for seed purposes farmers stock peanuts which meet the requirements of Segregation 1 peanuts. If the seed peanuts are produced under the auspices of a State agency which regulates or controls the production of seed peanuts, they may contain up to 3 percent damaged kernels and have visible *Aspergillus flavus,* and, in addition, the following moisture content, as applicable:

(1) Seed peanuts produced in the Southeastern and Virginia-Carolina areas, may contain up to 10.49 percent moisture except Virginia type peanuts which are not stacked at harvest time may contain up to 11.49 percent moisture; and

(2) Seed peanuts produced in the Southwestern area may contain up to 10.49 percent moisture. However, seed peanuts produced under the auspices of the State agency, which contain up to 3 percent damaged kernels and are free from visible *Aspergillus flavus,* shall be stored and shelled from other peanuts; and any residuals not used for seed shall not be used or disposed of for human consumption unless it is determined to be wholesome by chemical assay for aflatoxin. Seed peanuts produced under the auspices of the State agency which contain up to 3 percent damaged kernels and are free from visible *Aspergillus flavus,* may be stored and shelled with Segregation 1 seed peanuts which are also produced under the auspices of the State agency. A handler whose operations include custom shelling may receive, custom shell, and deliver for seed purposes farmers stock peanuts, and such peanuts shall be exempt from the Incoming Quality Regulation requirements, and, therefore, shall not be required to be inspected and certified as meeting the Incoming Quality Regulation requirements, and the handler shall report to the Committee, as requested, the weight of each lot of farmers stock peanuts received on such basis on a form furnished by the Committee. Handlers who acquire seed peanut residuals from their custom shelling of uninspected (farmers stock) seed peanuts or from another producer or sheller may mill such residuals with

other receipts or acquisitions of the handler, and such residuals which meet the Outgoing Quality Regulation requirements, may be disposed of by sale to human consumption outlets.

(e) *Oilstock.* Handlers may acquire for disposition to domestic crushing or export farmers stock peanuts of a lower quality than Segregation 1 or grades or sizes of shelled peanuts or cleaned inshell peanuts which fail to meet the requirements for human consumption. The provision of § 998.31 of the marketing agreement restricting acquisitions of such peanuts to handlers who are crushers is hereby modified pursuant to § 998.34, to authorize all handlers to act as accumulators and acquire, from other handlers or non-handlers, Segregation 2 or 3 farmers stock peanuts. Handlers may also acquire for crushing or export from other handlers peanuts originating from Segregation 2 or 3 farmers stock or the entire mill production of shelled peanuts from Segregation 1 farmers stock or lots of peanuts originating from Segregation 1 peanuts and which have been positive lot identified as specified in paragraph (d) of § 998.200, Outgoing quality regulation, which failed to meet the requirements for human consumption pursuant to paragraph (a) of § 998.200, Outgoing quality regulation: *Provided,* That all such acquisitions are held separate from Segregation 1 peanuts acquired for milling or from edible grades of shelled or milled peanuts. Handlers may commingle the Segregation 2 and 3 peanuts or keep them separate and apart. Handlers who acquire farmers stock peanuts of a lower quality than Segregation 1 or grades or sizes of shelled peanuts or cleaned inshell peanuts which fail to meet the requirements for human consumption shall report such acquisitions as prescribed by the Committee. To be eligible to receive or acquire Segregation 2 or 3 farmers stock peanuts and shelled peanuts originating therefrom, a handler shall pay to the Area Association a fee for the purpose of covering cost of supervision of the disposition of such peanuts.

(f) *Segregation 2 and 3 control.* To assure the removal from edible outlets of any lot of peanuts determined by Federal or Federal-State Inspection Service to be Segregation 2 or Segregation 3, each handler shall inform each employee, country buyer, commission buyer, or like person through whom the handler receives peanuts of the need to receive and withhold all lots of Segregation 2 and Segregation 3 peanuts from milling for edible use. If any lot of Segregation 2 or Segregation 3 farmers stock peanuts is not withheld but returned to the producer, the handler shall cause the Inspection Service to forward immediately a copy of the inspection certificate on the lot to the designated office of the handler and a copy to the Committee which shall be used only for information purposes.

(g) *Farmers stock storage and handling facilities.* Handlers shall report to the Committee, on a form furnished by the Committee, all storage facilities or contract storage facilities which they will use to store acquisitions of current crop Segregation 1 farmers stock peanuts, and all such storage facilities must be reported prior to storing of any such handler acquisitions. Handlers shall also report to the Committee the locations at which they will receive or acquire current crop farmers stock peanuts. All such storage facilities shall have reasonable and safe access to allow for inspection of the facility and its contents. All such storage facilities must be of sound construction, in good repair, and built and equipped so as to provide suitable storage and sufficient safeguards to prevent moisture condensation and provide adequate protection for farmers stock peanuts. All breaks or openings in the walls, floors, or roofs of the facilities shall have been repaired so as to keep out moisture. Elevator pits and wells must be kept dry and free of moisture at all times. Insect control procedures must be carried out in such a manner as to prevent undesirable moisture in the storage facilities. Any conditions in warehouses, elevators, pits, transportation equipment, including trucks and hopper cars, and other farmers stock handling equipment conducive to the growth or spread of Aspergillus flavus mold shall be corrected to the satisfaction of the Committee. The Committee may make periodic inspections of farmers stock storage and handling facilities and farmers stock peanuts stored in such facilities to determine if handlers are adhering to these requirements.

(h) *Shelled peanuts.* Handlers may acquire shelled peanuts, which originated from ''Segregation 1 peanuts,'' from other handlers, for remilling and subsequent disposition to human consumption outlets.

(i) Segregation 2 and Segregation 3 farmers stock peanuts held separate and apart or commingled, and disposed of to crushing or export are exempt from assessments under this section.

§ 998.200 Outgoing quality regulation for 1996 and subsequent crop peanuts.

The following modify or in addition to the peanut marketing agreement restrictions of § 998.32 on handler disposition of peanuts:

(a) *Shelled peanuts.* (1) No handler shall ship or otherwise dispose of shelled peanuts for human consumption unless such peanuts are positive lot identified, certified ''negative'' as to aflatoxin, and certified as meeting the requirements in the following ''Other Edible Quality * * *'' grades:

TABLE 1.—''OTHER EDIBLE QUALITY'' (INDEMNIFIABLE) GRADES—WHOLE KERNELS AND SPLITS

Excluding lots of ''splits''							
Type and grade category	Unshelled peanuts and damaged kernels (percent)	Unshelled peanuts, damaged kernels and minor defects (percent)	Fall through			Foreign materials (percent)	Moisture (percent)
			Sound split and broken kernels	Sound whole kernels	Total		
Runner	1.50	2.50	3.00%; 17/64 inch round screen.	3.00%; 16/64 x 3/4 inch; slot screen.	4.00%; both screens.	.20	9.00
Virginia (except No. 2)	1.50	2.50	3.00%; 17/64 inch; round screen.	3.00%; 15/64 x 1 inch; slot screen.	4.00%; both screens.	.20	9.00

TABLE 1.—''OTHER EDIBLE QUALITY'' (INDEMNIFIABLE) GRADES—WHOLE KERNELS AND SPLITS—Continued

Type and grade category	Unshelled peanuts and damaged kernels (percent)	Unshelled peanuts, damaged kernels and minor defects (percent)	Fall through			Foreign materials (percent)	Moisture (percent)
			Sound split and broken kernels	Sound whole kernels	Total		
Excluding lots of ''splits''							
Spanish and Valencia	1.50	2.50	3.00%; 16/64 inch; round screen.	3.00%; 15/64 x 3/4 inch; slot screen.	4.00%; both screens.	.20	9.00
No. 2 Virginia	1.50	3.00	6.00%; 17/64 inch; round screen.	6.00%; 15/64 x 1 inch; slot screen.	6.00%; both screens.	.20	9.00
Lots of ''splits''							
Runner (not more than 4% sound whole kernels).	1.50	2.50	3.00%; 17/64 inch; round screen.	3.00%; 14/64 x 3/4 inch; slot screen.	4.00%; both screens.	.20	9.00
Virginia (not less than 90% splits).	1.50	2.50	3.00%; 17/64 inch; round screen.	3.00%; 14/64 x 1 inch; slot screen.	4.00%; both screens.	.20	9.00
Spanish and Valencia (not more than 4% sound whole kernels).	1.50	2.50	3.00%; 16/64 inch; round screen.	3.00%; 13/64 x 3/4 inch; slot screen.	4.00%; both screens.	.20	9.00

(2) Prior to disposition to human consumption outlets, peanuts must be positive lot identified, be certified ''negative'' as to aflatoxin, and be certified as meeting the requirements in the following ''Indemnifiable Grades'' grades:

TABLE 2.—INDEMNIFIABLE GRADES

Type and grade category	Unshelled peanuts and damaged kernels (percent)	Unshelled peanuts, damaged kernels and minor defects (percent)	Fall through			Foreign materials (percent)	Moisture (percent)
			Sound split and broken kernels (percent)	Sound whole kernels (percent)	Total		
Maximum limitations							
Runner U.S. No.1 and better.	1.25	2.00	3.00%; 17/64 inch, round screen.	3.00%; 16/64x3/4 inch, slot screen.	4.00%; both screens.	.10	9.00
Virginia U.S. No.1 and better.	1.25	2.00	3.00%; 17/64 inch, round screen.	3.00%; 15/64x1 inch, slot screen.	4.00%; both screens.	.10	9.00
Spanish and Valencia U.S. No. 1 and better.	1.25	2.00	3.00%; 16/64 inch, round screen.	2.00%; 15/64x3/4 inch, slot screen.	4.00%; both screens.	.10	9.00
Runner U.S. Splits (not more than 4% sound, whole kernels).	1.25	2.00	2.00%; 17/64 inch, round screen.	3.00%; 14/64x3/4 inch, slot screen.	4.00%; both screens.	.20	9.00
Virginia U.S. Splits (not less than 90% splits and not more than 3.00% sound whole kernels and portions passing through 20/64 inch round screen).	1.25	2.00	3.00%; 17/64 inch, round screen.	3.00%; 14/64x1 inch, slot screen.	4.00%; both screens.	.20	9.00
Spanish and Valencia U.S. Splits (not more than 4% sound, whole kernels).	1.25	2.00	2.00%; 16/64 inch, round screen.	3.00%; 13/64x3/4 4.00%; inch, slot screen.	4.00%; both screens.	.20	9.00
Runner with splits (not more than 15% sound splits).	1.25	2.00	3.00%; 17/64 inch, round screen.	3.00%; 16/64x3/4 inch, slot screen.	4.00%; both screens.	.10	9.00
Virginia with splits (not more than 15% sound splits).	1.25	2.00	3.00%; 17/64 inch, round screen.	3.00%; 15/64x1 inch, slot screen.	4.00%; both screens.	.10	9.00

TABLE 2.—INDEMNIFIABLE GRADES—Continued

Type and grade category	Maximum limitations						
	Unshelled peanuts and damaged kernels (percent)	Unshelled peanuts, damaged kernels and minor defects (percent)	Fall through			Foreign materials (percent)	Moisture (percent)
			Sound split and broken kernels (percent)	Sound whole kernels (percent)	Total		
Spanish and Valencia with splits (not more than 15% sound splits).	1.25	2.00	3.00%; 16/64 inch, round screen.	2.00%; 15/64x3/4 inch, slot screen.	4.00%; both screens.	.10	9.00

(3) The term ''fall through'', as used herein, shall mean sound split and broken kernels and whole kernels which pass through specified screens.

(b) *Cleaned inshell peanuts.* No handler shall ship or otherwise dispose of cleaned inshell peanuts for human consumption:

(1) With more than 1.00 percent kernels with mold present unless a sample of such peanuts, drawn by an inspector of the Federal or Federal-State Inspection Service, was analyzed chemically by laboratories approved by the Committee or by a U.S. Department of Agriculture laboratory (hereinafter referred to as ''USDA laboratory'') and found to be wholesome relative to aflatoxin;

(2) with more than 2.00 percent peanuts with damaged kernels;

(3) with more than 10.00 percent moisture; or

(4) with more than 0.50 percent foreign material. The lot size of such peanuts in bags or bulk shall not exceed 200,000 pounds.

(c) *Sampling and testing shelled peanuts.* (1) Prior to shipment, each handler shall cause appropriate samples of each lot of edible quality shelled peanuts to be drawn by an inspector of the Federal or Federal-State Inspection Service. The gross amount of peanuts drawn shall be large enough to provide for a grade analysis, for a grading check-sample, and for three 48-pound samples for aflatoxin assay. The three 48-pound samples shall be designated by the Federal or Federal-State Inspection Service as ''Sample #1,'' ''Sample #2,'' and ''Sample #3'' and each sample shall be placed in a suitable container and ''positive lot identified'' by means acceptable to the Inspection Service and the Committee. Sample #1 may be prepared for immediate testing or Sample #1, Sample #2, and Sample #3 may be returned to the handler for testing at a later date. However, before shipment of the lot to the buyer (receiver), the handler shall cause Sample #1 to be ground by the Federal or Federal-State Inspection Service or a USDA or designated laboratory in a ''subsampling mill'' approved by the Committee. The resultant ground subsample from Sample #1 shall be of a size specified by the Committee and be designated as ''Subsample 1–AB'' and at the handler's or buyer's option, a second subsample may also be extracted from Sample #1. It shall be designated as ''Subsample 1–CD.'' Subsample 1–CD may be sent as requested by the handler or buyer, for aflatoxin assay, to a laboratory listed on the most recent Committee list of approved laboratories that can provide analyses results on such samples in 36 hours. Subsample 1–AB shall be analyzed only in USDA or designated laboratories. Both Subsamples 1–AB and 1–CD shall be accompanied by a notice of sampling signed by the inspector containing, at least, identifying information as to the handler (shipper), the buyer (receiver), if known, and the positive lot identification of the shelled peanuts. A copy of such notice covering each lot shall be sent to the Committee office.

(2) The samples designated as Sample #2 and Sample #3 shall be held as aflatoxin check-samples by the Inspection Service or the handler and shall not be included in the shipment to the buyer until the analyses results from Sample #1 are known. Upon call from the USDA or designated laboratory or the Committee, the handler shall cause Sample #2 to be ground by the Inspection Service in a ''subsampling mill.'' The resultant ground subsample from Sample #2 shall be of the size specified by the Committee and it shall be designated as ''Subsample 2–AB.'' Upon call from the USDA or designated laboratory or the Committee, the handler shall cause Sample #3 to be ground by the Inspection Service in a ''subsampling mill.'' The resultant ground subsample from Sample #3 shall be of the size specified by the Committee and it shall be designated as ''Subsample 3–AB.'' Subsamples 2–AB and 3–AB shall be analyzed only in USDA or designated laboratories and each shall be accompanied by a notice of sampling. A copy of each such notice shall be sent to the Committee office and the cost of delivery of Subsamples 2–AB and 3–AB to the laboratory and the cost of assay on them shall be at the Committee's expense.

(3) All costs involved in sampling and testing Subsample 1–CD shall be for the account of the buyer of the lot and at the buyer's expense. However, if the handler elects to pay any portion of these cost the handler shall charge the buyer accordingly. Aflatoxin sampling and testing cost for the AB subsamples shall be included as a separate item in the handler's invoice to the buyer at the rate of $0.0027 per pound or $0.27 per hundredweight of the peanuts covered by the invoice. When any of the samples or subsamples have been lost, misplaced, or spoiled and replacement samples are needed, the entire cost of drawing the replacement samples shall be for the account of the handler. The results of each assay shall be reported to the buyer listed on the notice of sampling and, if the handler desires, to the handler. If a buyer is not listed on the notice of sampling, the results of the assay shall be reported to the handler, who shall promptly cause notice to be given to the buyer of the contents thereof, and such handler shall not be required to furnish additional samples for assay.

(4) For the current crop year, ''negative'' aflatoxin content means 15 parts per billion (ppb) or less for peanuts which have been certified as meeting edible quality grade requirements as determined by the Committee's sampling plan applicable to the respective grade categories.

(d) *Identification.* Each lot of shelled or cleaned inshell peanuts, in lot sizes not exceeding 200,000 pounds, shall be identified by positive lot identification procedures prior to being shipped or otherwise disposed of. For the purpose of this regulation, ''positive lot

identification'' of a lot of shelled or inshell peanuts is a means of relating the inspection certificate to the lot which has been inspected so that there can be no doubt that the peanuts are the same ones described on the inspection certificate. The crop year that is shown on the positive lot identification tags, or other means of positive lot identification shall accurately describe the crop year in which the peanuts in the lot were produced. Such procedure on bagged peanuts shall consist of attaching a lot numbered tag bearing the official stamp of the Federal or Federal-State Inspection Service to each filled bag in the lot. The tag shall be sewed (machine sewed if shelled peanuts) into the closure of the bag except that in plastic bags the tag shall be inserted prior to sealing so that the official stamp is visible. Any peanuts moved in bulk or bulk bins shall have their lot identity maintained by sealing the conveyance and if in other containers by other means acceptable to the Federal or Federal-State Inspection Service and to the Committee. All lots of shelled or cleaned inshell peanuts shall be handled, stored, and shipped under positive lot identification procedures, except that lots which have been reconstituted and/or commingled at the request of the receiver. All such reconstituted and/or commingled lots will no longer be eligible for indemnification or for appeal inspection. Handlers shall keep and maintain records of the quantities involved in each reconstituting and/or commingling procedure, whether in single or multiple lots, and such records shall be available to the Committee on request.

(e) *Reinspection.* Whenever the Committee has reason to believe that peanuts may have been damaged or deteriorated while in storage, the Committee may reject the then effective inspection certificate and may require the owner of the peanuts to have a reinspection to establish whether or not such peanuts may be disposed of for human consumption.

(f) *Further modification of § 998.32.*

(1) The provisions of § 998.32(a) restricting the disposition of peanuts which fail to meet the requirements specified heretofore in this section to the Commodity Credit Corporation or in such manner as may be prescribed by the Committee with the approval of the Secretary, is hereby modified to specify that only peanuts which have been certified as meeting the requirements specified in paragraphs (a) or (b) of this section, which have been sampled pursuant to paragraph (c) of this section, and which have been identified pursuant to paragraph (d) of this section are eligible for disposition to human consumption outlets.

(2) Lots of peanuts which have not been certified as meeting the requirements for disposition to human consumption outlets, may be disposed for non-human consumption uses which are not regulated or limited by the provisions specified hereinafter in this section: *Provided,* That each such lot is positive lot identified, using red tags, and certified as to aflatoxin content (actual numerical count). However, on the shipping papers covering the disposition of each such lot of inedible quality peanuts, the handler shall cause the following statement to be shown: ''The peanuts covered by this bill of lading (or invoice, etc.) are not to be used for human consumption.''

(3) Except for inedible quality peanuts disposed of under the provisions of paragraph (f)(2) of this section and peanuts derived from the milling for seed of Segregation 2 and 3 farmers stock peanuts, peanuts which have not been certified as meeting the standards set forth in paragraphs (a) or (b) of this section shall be disposed of as prescribed hereinafter in this section.

(g) *Sheller oil stock residuals—for crushing or export.* Peanuts and portions of peanuts which are separated from edible quality peanuts by screening or sorting or other means during the milling process, may be segregated into categories or commingled as sheller oil stock residuals. Such sheller oil stock residuals shall be identified pursuant to paragraph (d) of this section, but using a red tag, and such peanuts may be disposed of domestically or to the export market in bulk or bags or other suitable containers. Disposition to crushing may be to handlers who are crushers or to domestic crushers who are not handlers under the Agreement only on the condition that they agree to comply with the terms of this paragraph and all other applicable requirements of the Agreement. The movement of such peanuts shall be reported to the Committee by the shipping handler and the crusher, as requested by the Committee.

(1) If the peanuts have not been tested and certified as to aflatoxin content, as prescribed in paragraph (c) of this section, the handler shall cause the following statement to be shown on the shipping papers: ''The peanuts covered by this bill of lading (or invoice, etc.) are limited to crushing only and may contain aflatoxin.''

(2) If the peanuts are certified as 301 ppb or more aflatoxin content, disposition shall be limited to crushing or export.

(h) *Blanching and remilling peanuts failing quality requirements.* (1) Handlers may blanch or cause to have blanched positive lot identified shelled peanuts, which originated from Segregation 1 peanuts, that fail to meet the requirements of paragraph (a) of this section because of excessive damage, minor defects, moisture, or foreign material or are positive as to aflatoxin. Prior to movement of such peanuts to a blancher, handlers shall report to the Committee, on a form furnished by the Committee, and receive authorization from the Committee for movement and blanching of each such lot. Lots of peanuts which are moved under these provisions must be accompanied by a valid grade inspection certificate and the title shall be retained by the handler until the peanuts are blanched and certified by an inspector of the Federal or Federal-State Inspection Service as meeting the requirements for disposal into human consumption outlets. To be eligible for disposal into human consumption outlets, such peanuts after blanching, must meet specifications for unshelled peanuts, damaged kernels, minor defects, moisture, and foreign material as listed in paragraph (a) of this section and be accompanied by an aflatoxin certificate determined to be negative by the Committee. The residual peanuts, excluding skins and hearts, resulting from blanching under these provisions, shall be bagged and red tagged and disposition shall be that such peanuts are returned to the handler for further disposition; or, in the alternative, such residuals shall be positive lot identified by the Federal or Federal-State Inspection Service, and shall be disposed of, by the blancher, to handlers who are crushers, or to domestic crushers who are not handlers under the Agreement only on the condition that they agree to comply with the terms of paragraph (g) of this section and all other applicable requirements of the Agreement. Blanching under the provisions of this paragraph shall be performed only by those firms who agree to procedures acceptable to the Committee and who are approved by the Committee to do such blanching.

(2) Handlers may contract with Committee approved remillers for remilling shelled peanuts, which originated from Segregation 1 peanuts, that fail to meet the requirements for disposition to human consumption outlets heretofore specified in paragraph (a) of this section: *Provided,* That such lots of peanuts contain not in excess of 10 percent fall through. Prior to

movement of such peanuts under these provisions to a Committee approved remiller, handlers shall report to the Committee, on a form furnished by the Committee, and receive authorization from the Committee for movement and remilling of each such lot. Lots of peanuts moved under these provisions must be accompanied by a valid grade inspection certificate and must be positive lot identified and the title of such peanuts shall be retained by the handler until the peanuts have been remilled and certified by the Federal or Federal-State Inspection-Service as meeting the requirements for disposition to human consumption outlets specified in paragraph (a) of this section, and be accompanied by an aflatoxin certificate determined to be negative by the Committee. Remilling under these provisions may include composite remilling of more than one such lot of peanuts owned by the same handler. However, such peanuts owned by one handler shall be held and remilled separate and apart from all other peanuts. The residual peanuts resulting from remilling under these provisions, shall be bagged and red tagged and disposition shall be that such peanuts are returned to the handler for further disposition; or, in the alternative, such residuals shall be positive lot identified by the Federal or Federal-State Inspection Service, and shall be disposed of, by the remiller, to handlers who are crushers, or to domestic crushers who are not handlers under the Agreement only on the condition that they agree to comply with the terms of paragraph (g) of this section and all other applicable requirements of the Agreement. Remilling under the provisions of this paragraph shall be performed only by those firms who agree to procedures acceptable to the Committee and who are approved by the Committee to do such remilling.

(i) *Documentation of compliance.* Each handler shall keep and maintain records of all receipts and acquisitions and all milling, remilling, blanching, use and disposition of peanuts which have not been certified as meeting the requirements for disposition to human consumption, pursuant to paragraph (a) or (b) of this section, as will document and substantiate compliance and performance under this agreement.

PART 999—SPECIALTY CROPS; IMPORT REGULATIONS

1. The authority citation for 7 CFR part 999 continues to read as follows:

Authority: 7 U.S.C. 601–674; and 7 U.S.C. 1445c–3.

2. Section 999.600 is revised to read as follows:

§ 999.600 Regulation governing imports of peanuts.

(a) *Definitions.* (1) *Peanuts* means the seeds of the legume *Arachis hypogaea* and includes both inshell and shelled peanuts produced in countries other than the United States, other than those marketed in green form for consumption as boiled peanuts.

(2) *Farmers stock peanuts* means picked and threshed raw peanuts which have not been shelled, crushed, cleaned or otherwise changed (except for removal of foreign material, loose shelled kernels, and excess moisture) from the form in which customarily marketed by producers.

(3) *Inshell peanuts* means peanuts, the kernels or edible portions of which are contained in the shell.

(4) *Incoming inspection* means the sampling and inspection of farmers stock peanuts to determine Segregation quality.

(5) *Segregation 1 peanuts,* unless otherwise specified, means farmers stock peanuts with not more than 2.00 percent damaged kernels nor more than 1.00 percent concealed damage caused by rancidity, mold, or decay and which are free from visible *Aspergillus flavus* mold.

(6) *Segregation 2 peanuts,* unless otherwise specified, means farmers stock peanuts with more than 2.00 percent damaged kernels or more than 1.00 percent concealed damage caused by rancidity, mold, or decay and which are free from visible *Aspergillus flavus* mold.

(7) *Segregation 3 peanuts,* unless otherwise specified, means farmers stock peanuts with visible *Aspergillus flavus* mold.

(8) *Shelled peanuts* means the kernels of peanuts after the shells are removed.

(9) *Outgoing inspection* means the sampling and inspection of either: shelled peanuts which have been cleaned, sorted, sized and otherwise prepared for human consumption markets; or inshell peanuts which have been cleaned, sorted and otherwise prepared for inshell human consumption markets.

(10) *Negative aflatoxin content* means 15 parts-per-billion (ppb) or less for peanuts which have been certified as meeting edible quality grade requirements, and 25 ppb or less for inedible quality peanuts.

(11) *Person* means an individual, partnership, corporation, association, or any other business unit.

(12) *Secretary* means the Secretary of Agriculture of the United States or any officer or employee of the United States Department of Agriculture (Department or USDA) who is, or who may hereafter be, authorized to act on behalf of the Secretary.

(13) *Inspection service* means the Federal or Federal-State Inspection Service, Fruit and Vegetable Division, Agricultural Marketing Service, USDA.

(14) *USDA laboratory* means laboratories of the Science and Technology Division, Agricultural Marketing Service, USDA, that chemically analyze peanuts for aflatoxin content.

(15) *PAC approved laboratories* means laboratories approved by the Peanut Administrative Committee, pursuant to Peanut Marketing Agreement No. 146 (7 CFR Part 998), that chemically analyze peanuts for aflatoxin content.

(16) *Conditionally released* means released from Customs Service custody for further handling (sampling, inspection, chemical analysis, or storage) before final release.

(17) *Importation* means the arrival of a peanut shipment at a port-of-entry with the intent to enter the peanuts into channels of commerce of the United States.

(b) *Incoming regulation:* (1) Farmers stock peanuts presented for consumption must undergo incoming inspection. Only Segregation 1 peanuts may be used for human consumption. All foreign produced farmers stock peanuts for human consumption must be sampled and inspected at a buying point or other handling facility capable of performing incoming sampling and inspection. Sampling and inspection shall be conducted by the inspection service. Only Segregation 1 peanuts certified as meeting the following requirements may be used in human consumption markets:

(i) *Moisture.* Except as provided under paragraph (b)(2) *Seed peanuts,* of this section, peanuts may not contain more than 10.49 percent moisture: *Provided,* That peanuts of a higher moisture content may be received and dried to not more than 10.49 percent moisture prior to storage or milling.

(ii) *Foreign material.* Peanuts may not contain more than 10.49 percent foreign material, except that peanuts having a higher foreign material content may be held separately until milled, or moved over a sand-screen before storage, or shipped directly to a plant for prompt shelling. The term ''sand-screen'' means any type of farmers stock cleaner which, when in use, removes sand and dirt.

(iii) *Damage.* For the purpose of determining damage, other than concealed damage, on farmers stock peanuts, all percentage determinations

shall be rounded to the nearest whole number.

(2) *Seed peanuts.* Farmers stock peanuts determined to be Segregation 1 quality, and shelled peanuts certified negative to aflatoxin (15 ppb or less), may be imported for seed purposes. Residuals from the shelling of Segregation 1 seed peanuts may be milled with other imported peanuts of the importer, and such residuals meeting quality requirements specified in paragraph (c)(1) of this section may be disposed to human consumption channels. Any portion not meeting such quality requirements shall be disposed to inedible peanut channels pursuant to paragraphs (f) and (g) of this section. All disposition of seed peanuts and residuals from seed peanuts, whether commingled or kept separate and apart, shall be reported to the Secretary pursuant to paragraphs (f)(2) and (f)(3) of this section. The receiving seed outlet must retain records of the transaction, pursuant to paragraph (g)(7) of this section.

(3) *Oilstock and exportation.* Farmers stock peanuts of lower quality than Segregation 1 (Segregation 2 and 3 peanuts) shall be used only in inedible outlets. Segregation 2 and 3 peanuts may be commingled but shall be kept separate and apart from edible quality peanut lots. Commingled Segregation 2 and 3 peanuts and Segregation 3 peanuts shall be disposed only to oilstock or exported. Shelled peanuts and cleaned-inshell peanuts which fail to meet the requirements for human consumption in paragraphs (c)(1) or (c)(2), respectively, of § 997.600, may be crushed for oil or exported.

(c) *Outgoing regulation.* No person shall import peanuts for human consumption into the United States unless such peanuts are lot identified and certified by the inspection service as meeting one of the following requirements:

(1) *Shelled peanuts.* (i) No importer shall ship or otherwise dispose of shelled peanuts to human consumption markets unless such peanuts are lot identified, certified as ''negative'' to aflatoxin, and meet the requirements specified in Table 1.

TABLE 1.—MINIMUM GRADE REQUIREMENTS—PEANUTS FOR HUMAN CONSUMPTION

[Whole Kernels and Splits]

Maximum limitations							
Excluding lots of ''splits''							
Type and grade category	Unshelled peanuts and damaged kernels (percent)	Unshelled peanuts damaged kernels and minor defects (percent)	Fall through			Foreign materials (percent)	Moisture (percent)
			Sound split and broken kernels	Sound whole kernels	Total		
Runner	1.50	2.50	3.00%; 17/64 inch round screen.	3.00%; 16/64 x 3/4 inch; slot screen.	4.00%; both screens.	.20	9.00
Virginia (except No. 2)	1.50	2.50	3.00%; 17/64 inch; round screen.	3.00%; 15/64 x 1 inch; slot screen.	4.00%; both screens.	.20	9.00
Spanish and Valencia	1.50	2.50	3.00%; 16/64 inch; round screen.	3.00%; 15/64 x 3/4 inch; slot screen.	4.00%; both screens.	.20	9.00
No. 2 Virginia	1.50	3.00	6.00%; 17/64 inch; round screen.	6.00%; 15/64 x 1 inch; slot screen.	6.00%; both screens.	.20	9.00
Lots of ''splits''							
Runner (not more than 4% sound whole kernels).	1.50	2.50	3.00%; 17/64 inch; round screen.	3.00%; 14/64 x 3/4 inch; slot screen.	4.00%; both screens.	.20	9.00
Virginia (not less than 90% splits).	1.50	2.50	3.00%; 17/64 inch; round screen.	3.00%; 14/64 x 1 inch; slot screen.	4.00%; both screens.	.20	9.00
Spanish and Valencia (not more than 4% sound whole kernels).	1.50	2.50	3.00%; 16/64 inch; round screen.	3.00%; 13/64 x 3/4 inch; slot screen.	4.00%; both screens.	.20	9.00

(ii) Shelled peanuts which are lot identified, certified as ''negative'' to aflatoxin pursuant to paragraph (d)(4)(v) of this section, and meet requirements specified in the Table 2, may be shipped to human consumption markets prior to the importer receiving such aflatoxin certification.

TABLE 2.—SUPERIOR QUALITY REQUIREMENTS—PEANUTS FOR HUMAN CONSUMPTION

[Whole Kernels and Splits]

Type and grade category	Maximum limitations						
	Unshelled peanuts and damaged kernels (percent)	Unshelled peanuts damaged kernels and minor defects (percent)	Fall through			Foreign material (percent)	Moisture (percent)
			Sound split and broken kernels (percent)	Sound whole kernels (percent)	Total		
Runner U.S. No.1 and better.	1.25	2.00	3.00%; 17/64 inch, round screen.	3.00%; 16/64 x 3/4 inch, slot screen.	4%; both screens	.10	9.00.
Virginia U.S. No.1 and better.	1.25	2.00	3.00%; 17/64 inch, round screen.	3.00%; 15/64 x 1 inch, slot screen.	4.00%; both screens.	.10	9.00
Spanish and Valencia U.S. No.1 and better.	1.25	2.00	3.00%; 16/64 inch, round screen.	2.00%; 15/64 x 3/4 inch, slot screen.	4.00%; both screens.	.10	9.00
Runner U.S. Splits (not more than 4% sound, whole kernels).	1.25	2.00	2.00%; 17/64 inch, round screen.	3.00%; 14/64 x 3/4 inch, slot screen.	4.00%; both screens.	20	9.00
Virginia U.S. Splits (not less than 90% splits and not more than 3.00% sound whole kernels and portions passing through 20/64 inch round screen).	1.25	2.00	3.00%; 17/64 inch, round screen.	3.00%; 14/64 x 1 inch, slot screen.	4.00%; both screens.	.20	9.00
Spanish and Valencia U.S. Splits (not more than 4% sound, whole kernels).	1.25	2.00	2.00%; 16/64 inch, round screen.	3.00%; 13/64 x 3/4 inch, slot screen.	4.00%; both screens.	.20	9.00
Runner with splits (not more than 15% sound splits).	1.25	2.00	3.00%; 17/64 inch, round screen.	3.00%; 16/64 x 3/4 inch, slot screen.	4.00%; both screens.	.10	9.00
Virginia with splits (not more than 15% sound splits).	1.25	2.00	3.00%; 17/64 inch, round screen.	3.00%; 15/64 x 1 inch, slot screen.	4.00%; both screens.	.10	9.00
Spanish and Valencia with splits (not more than 15% sound splits).	1.25	2.00	3.00%; 16/64 inch, round screen.	2.00%; 15/64 x 3/4 inch, slot screen.	4.00%; both screens.	.10	9.00

(iii) The term ''fall through'', as used herein, shall mean sound split and broken kernels and whole kernels which pass through specified screens. Prior to shipment, appropriate samples for pretesting shall be drawn in accordance with paragraph (d) of this section from each lot of Superior Quality peanuts.

(2) *Cleaned-inshell peanuts.* Peanuts declared as cleaned-inshell peanuts may be presented for sampling and outgoing inspection in bags at the port-of-entry. Alternatively, peanuts may be conditionally released as cleaned-inshell peanuts but shall not subsequently undergo any cleaning, sorting, sizing or drying process prior to presentation for outgoing inspection as cleaned-inshell peanuts. Cleaned-inshell peanuts which fail outgoing inspection may be reconditioned or redelivered to the port-of-entry, at the option of the importer. Cleaned-inshell peanuts determined to be unprepared farmers stock peanuts must be inspected against incoming quality requirements and determined to be Segregation 1 peanuts prior to outgoing inspection for cleaned-inshell peanuts. Cleaned-inshell peanuts intended for human consumption may not contain more than:

(i) 1.00 percent kernels with mold present, unless a sample of such peanuts is drawn by the inspection service and analyzed chemically by a USDA or PAC approved laboratory and certified ''negative'' as to aflatoxin.

(ii) 2.00 percent peanuts with damaged kernels;

(iii) 10.00 percent moisture (carried to the hundredths place); and

(iv) 0.50 percent foreign material.

(d) *Sampling and inspection.* (1) All sampling and inspection, quality certification, chemical analysis, and lot identification, required under this section, shall be done by the inspection service, a USDA laboratory, or a PAC-approved laboratory, as applicable, in accordance with the procedures specified herein. The importer shall make arrangements with the inspection service for sampling, inspection, lot identification and certification of all peanuts accumulated by the importer. The importer also shall make arrangements for the appropriate disposition of peanuts failing edible quality requirements of this section. All costs of sampling, inspection, certification, identification, and disposition incurred in meeting the requirements of this section shall be paid by the importer. Whenever peanuts are offered for inspection, the importer shall furnish any labor and pay any costs incurred in moving and opening containers as may be necessary for proper sampling and inspection.

(2) For farmers stock inspection, the importer shall cause the inspection service to perform an incoming inspection and to issue an CFSA–1007, ''Inspection Certificate and Sales Memorandum'' form designating the lot as Segregation 1, 2, or 3 quality peanuts. For shelled and cleaned-inshell peanuts,

the importer shall cause the inspection service to perform an outgoing inspection and issue an FV–184–9A, ''Milled Peanut Inspection Certificate'' reporting quality and size of the shelled or cleaned-inshell peanuts, whether the lot meets or fails to meet quality requirements for human consumption of this section, and that the lot originated in a country other than the United States. The importer shall provide to the Secretary copies of all CFSA 1007 and FV–184–9A applicable to each peanut lot conditionally released to the importer. Such reports shall be submitted as provided in paragraphs (f)(2) and (f)(3) of this section.

(3) *Procedures for sampling and testing peanuts.* Sampling and testing of peanuts for incoming and outgoing inspections of peanuts presented for consumption into the United States will be conducted as follows:

(i) *Application for sampling.* The importer shall request inspection and certification services from one of the following inspection service offices convenient to the location where the peanuts are presented for incoming and/or outgoing inspection. To avoid possible delays, the importer should make arrangements with the inspection service in advance of the inspection date. A copy of the Customs Service entry document specific to the peanuts to be inspected shall be presented to the inspection official prior to sampling of the lot.

(A) The following offices provide incoming farmers stock inspection:

Dothan, AL, tel: (334) 792–5185,
Graceville, FL, tel: (904) 263–3204,
Winter Haven, FL, tel: (813) 291–5820, ext 260,
Albany, GA, tel: (912) 432–7505,
Williamston, NC, tel: (919) 792–1672,
Columbia, SC, tel: (803) 253–4597,
Suffolk, VA, tel: (804) 925–2286,
Portales, NM, tel: (505) 356–8393,
Oklahoma City, OK, tel: (405) 521–3864,
Gorman, TX, tel: (817) 734–3006,
Yuma, AZ, tel: (602) 344–3869.

(B) The following offices, in addition to the offices listed in paragraph (d)(3)(i)(A) of this section, provide outgoing sampling and/or inspection services, and certify shelled and cleaned-inshell peanuts as meeting or failing the quality requirements of this section:

Eastern U.S.

Mobile, AL, tel: (205) 690–6154,
Jacksonville, FL, tel: (904) 359–6430,
Miami, FL, tel: (305) 592–1375,
Tampa, FL, tel: (813) 272–2470,
Presque Isle, ME, tel: (207) 764–2100,
Baltimore/Washington, tel: (301) 344–1860,
Boston, MA, tel: (617) 389–2480,
Newark, NJ, tel: (201) 645–2670,
New York, NY, tel: (212) 718–7665,
Buffalo, NY, tel: (716) 824–1585,
Philadelphia, PA, tel: (215) 336–0845,
Norfolk, VA, tel: (804) 441–6218,

Central U.S.

New Orleans, LA, tel: (504) 589–6741,
Detroit, MI, tel: (313) 226–6059,
St. Paul, MN, tel: (612) 296–8557,
Las Cruces, NM, tel: (505) 646–4929,
Alamo, TX, tel: (210) 787–4091,
El Paso, TX, tel: (915) 540–7723,
Houston, TX, tel: (713) 923–2557,

Western U.S.

Nogales, AZ, tel: (602) 281–0783,
Los Angeles, CA, tel: (213) 894–2489,
San Francisco, CA, tel: (415) 876–9313,
Honolulu, HI, tel: (808) 973–9566,
Salem, OR, tel: (503) 986–4620,
Seattle, WA, tel: (206) 859–9801.

(C) Questions regarding inspection services or requests for further assistance may be obtained from: Fresh Products Branch, P.O. Box 96456, room 2049–S, Fruit and Vegetable Division, AMS, USDA, Washington, D.C. 20090–6456, telephone (202) 690–0604, fax (202) 720–0393.

(ii) *Sampling.* Sampling of bulk farmers stock lots shall be performed at a facility that utilizes a pneumatic sampler or approved automatic sampling device. The size of farmers stock lots, shelled lots, and cleaned-inshell lots, in bulk or bags, shall not exceed 200,000 pounds. For farmers stock, shelled and cleaned-inshell lots not completely accessible for sampling, the applicant shall be required to have lots made accessible for sampling pursuant to inspection service requirements. The importer shall cause appropriate samples of each lot of edible quality shelled peanuts to be drawn by the inspection service. The amount of such peanuts drawn shall be large enough to provide for a grade and size analysis, for a grading check-sample, and for three 48-pound samples for aflatoxin assay. Because there is no acceptable method of drawing official samples from bulk conveyances of shelled peanuts, the importer shall arrange to have bulk conveyances of shelled peanuts sampled during the unloading process. A bulk lot sampled in this manner must be positive lot identified by the inspection service and held in a sealed bin until the associated inspection and aflatoxin test results have been reported.

(4) *Aflatoxin assay.* (i) The importer shall cause appropriate samples of each lot of shelled peanuts intended for edible consumption to be drawn by the inspection service. The three 48-pound samples shall be designated by the inspection service as ''Sample 1IMP,'' ''Sample 2IMP,'' and ''Sample 3IMP'' and each sample shall be placed in a suitable container and lot identified by the inspection service. Sample 1IMP may be prepared for immediate testing or Samples 1IMP, 2IMP and 3IMP may be returned to the importer for testing at a later date, under lot identification procedures.

(ii) The importer shall cause Sample 1IMP to be ground by the inspection service or a USDA or PAC-approved laboratory in a subsampling mill. The resultant ground subsample shall be of a size specified by the inspection service and shall be designated as ''Subsample 1–ABIMP.'' At the importer's option, a second subsample may also be extracted from Sample 1IMP and designated ''Subsample 1–CDIMP'' which may be sent for aflatoxin assay to a USDA or PAC-approved laboratory. Both subsamples shall be accompanied by a notice of sampling signed by the inspector containing identifying information as to the importer, the lot identification of the shelled peanut lot, and other information deemed necessary by the inspection service. Subsamples 1–ABIMP and 1–CDIMP shall be analyzed only in a USDA or PAC-approved laboratory. The methods prescribed by the Instruction Manual for Aflatoxin Testing, SD Instruction-1, August 1994, shall be used to assay the aflatoxin level. The cost of testing and notification of Subsamples 1–ABIMP and 1–CDIMP shall be borne by the importer.

(iii) The samples designated as Sample 2IMP and Sample 3IMP shall be held as aflatoxin check-samples by the inspection service or the importer until the analyses results from Sample 1IMP are known. Upon call from the USDA or PAC-approved laboratory, the importer shall cause Sample 2IMP to be ground by the inspection service in a subsampling mill. The resultant ground subsample from Sample 2IMP shall be designated as ''Subsample 2–ABIMP.'' Upon further call from the laboratory, the importer shall cause Sample 3IMP to be ground by the inspection service in a subsampling mill. The resultant ground subsample shall be designated as ''Subsample 3–ABIMP.'' The importer shall cause Subsamples 2–ABIMP and 3–ABIMP to be sent to and analyzed only in a USDA or PAC-approved laboratory. Each subsample shall be accompanied by a notice of sampling. The results of each assay shall be reported by the laboratory to the importer. All costs involved in the sampling, shipment and assay analysis

of subsamples required by this section shall be borne by the importer.

(iv)(A) Importers should contact one of the following USDA or PAC-approved laboratories to arrange for chemical analysis.

Science and Technology Division, AMS/USDA, P.O. Box 279, 301 West Pearl St., Aulander, NC 27805, Tel: (919) 345–1661 Ext. 156, Fax: (919) 345–1991

Science and Technology Division, AMS/USDA, 1211 Schley Ave., Albany, GA 31707, Tel: (912) 430–8490 / 8491, Fax: (912) 430–8534

Science and Technology Division, AMS/USDA, P.O. Box 488, Ashburn, GA 31714, Tel: (912) 567–3703

Science and Technology Division, AMS/USDA, 610 North Main St., Blakely, GA 31723, Tel: (912) 723–4570, Fax: (912) 723–3294

Science and Technology Division, AMS/USDA, 1557 Reeves St., Dothan, AL 36303, Tel: (334) 794–5070, Fax: (334) 671–7984

Science and Technology Division, AMS/USDA, 107 South Fourth St., Madill, OK 73446, Tel: (405) 795–5615, Fax: (405) 795–3645

Science and Technology Division, AMS/USDA, P.O. Box 272, 715 N. Main Street, Dawson, GA 31742, Tel: (912) 995–7257, Fax: (912) 995–3268

Science and Technology Division, AMS/USDA, P.O. Box 1130, 308 Culloden St., Suffolk, VA 23434, Tel: (804) 925–2286, Fax: (804) 925–2285

ABC Research, 3437 SW 24th Avenue, Gainesville, FL 32607–4502, Tel: (904) 372–0436, Fax: (904) 378–6483

J. Leek Associates, Inc., P.O. Box 50395, 1200 Wyandotte (31705), Albany, GA 31703–0395, Tel: (912) 889–8293, Fax: (912) 888–1166

J. Leek Associates, Inc., P.O. Box 368, 675 East Pine, Colquitt, GA 31737, Tel: (912) 758–3722, Fax: (912) 758–2538

J. Leek Associates, Inc., P.O. Box 6, 502 West Navarro St., DeLeon, TX 76444, Tel: (817) 893–3653, Fax: (817) 893–3640

Pert Laboratories, P.O. Box 267, Peanut Drive, Edenton, NC 27932, Tel: (919) 482–4456, Fax: (919) 482–5370

Pert Laboratory South, P.O. Box 149, Hwy 82 East, Seabrook Drive, Sylvester, GA 31791, Tel: (912) 776–7676, Fax: (912) 776–1137

Professional Service Industries, Inc., 3 Burwood Lane, San Antonio, TX 78216, Tel: (210) 349–5242, Fax: (210) 342–9401

Southern Cotton Oil Company, 600 E. Nelson Street, P.O. Box 180, Quanah, TX 79252, Tel: (817) 663–5323, Fax: (817) 663–5091

Quanta Lab, 9330 Corporate Drive, Suite 703, Selma, TX 78154–1257, Tel: (210) 651–5799, Fax: (210) 651–9271

(B) Further information concerning the chemical analyses required pursuant to this section may be obtained from: Science and Technology Division, USDA/AMS, P.O. Box 96456, room 3507–S, Washington, DC 20090–6456, telephone (202) 720–5231, or facsimile (202) 720–6496.

(v) *Reporting aflatoxin assays.* A separate aflatoxin assay certificate, Form CSSD–3 ''Certificate of Analysis for Official Samples'' or equivalent PAC approved laboratory form, shall be issued by the laboratory performing the analysis for each lot. The assay certificate shall identify the importer, the volume of the peanut lot assayed, date of the assay, and numerical test result of the assay. The results of the assay shall be reported as follows.

(A) For the current peanut quota year, ''negative'' aflatoxin content means 15 parts per billion (ppb) or less aflatoxin content for peanuts which have been certified as meeting edible quality grade requirements. Such lots shall be certified as ''Meets U.S. import requirements for edible peanuts under § 999.600 with regard to aflatoxin.''

(B) Lots containing more than 15 ppb aflatoxin content shall be certified as ''Fails to meet U.S. import requirements for edible peanuts under § 999.600 with regard to aflatoxin.'' The certificate of any inedible peanut lot also shall specify the aflatoxin count in ppb. The importer shall file USDA Form CSSD–3, or equivalent form, with the Secretary, regardless of the test result.

(5) *Appeal inspection.* In the event an importer questions the results of a quality and size inspection, an appeal inspection may be requested by the importer and performed by the inspection service. A second sample will be drawn from each container and shall be double the size of the original sample. The results of the appeal sample shall be final and the fee for sampling, grading and aflatoxin analysis shall be charged to the importer.

(e) *Disposition of peanuts failing edible quality requirements.* Peanuts shelled, sized and sorted in another country prior to arrival in the U.S. and shelled peanuts which originated from imported Segregation 1 peanuts that fail quality requirements of Table 1 (excessive damage, minor defects, moisture, or foreign material) or are positive to aflatoxin may be reconditioned by remilling and/or blanching. After such reconditioning, peanuts meeting the quality requirements of Table 1 and which are negative to aflatoxin (15 ppb or less) may be disposed for edible peanut use. Residual peanut lots resulting from milling or reconditioning of such lots shall be disposed of as prescribed below:

(1) Failing peanut lots may be disposed for non-human consumption uses (such as livestock feed, wild animal feed, rodent bait, seed, etc.) which are not otherwise regulated by this section; *Provided,* that each such lot is lot identified and certified as to aflatoxin content (actual numerical count). On the shipping papers covering the disposition of each such lot, the importer shall cause the following statement to be shown: ''The peanuts covered by this bill of lading (or invoice) are not to be used for human consumption.''

(2) Peanuts, and portions of peanuts which are separated from edible quality peanuts by screening or sorting or other means during the milling process (''sheller oilstock residuals''), may be sent to inedible peanut markets pursuant to paragraph (e)(1) of this section, crushed or exported. Such peanut may be commingled with other milled residuals. Such peanuts shall be positive lot identified, red tagged in bulk or bags or other suitable containers.

(i) If such peanuts have not been certified as to aflatoxin content, as prescribed in paragraph (d) of this section, disposition is limited to crushing and the importer shall cause the following statement to be shown on the shipping papers: ''The peanuts covered by this bill of lading (or invoice, etc.) are limited to crushing only and may contain aflatoxin.''

(ii) If the peanuts are certified as 301 ppb or more aflatoxin content, disposition shall be limited to crushing or export.

(3) Shelled peanuts which originated from Segregation 1 peanuts that fail quality requirements of Table 1, peanuts derived from the milling for seed of Segregation 2 and 3 farmers stock peanuts, and peanuts which are positive to aflatoxin may be remilled or blanched. Residuals of remilled and/or blanched peanuts which continue to fail quality requirements of Table 1 shall be disposed of pursuant to paragraphs (e)(1) or (2) of this section.

(4) All certifications, lot identifications, and movement to inedible dispositions, sufficient to account for all peanuts in each consumption entry, shall be reported to the Secretary by the importer pursuant to paragraphs (f)(2) and (f)(3) of this section.

(f) *Safeguard procedures.* (1) Prior to arrival of a foreign produced peanut lot

at a port-of-entry, the importer, or customs broker acting on behalf of the importer, shall mail or send by facsimile transmission (fax) a copy of the Customs Service entry documentation for the peanut lot or lots to the inspection service office that will perform sampling of the peanut shipment. More than one lot may be entered on one entry document. The documentation shall include identifying lot(s) or container number(s) and volume of the peanuts in each lot being entered, and the location (including city and street address), date and time for inspection sampling. The inspection office shall sign, stamp, and return the entry document to the importer. The importer shall present the stamped document to the Customs Service at the port-of-entry and send a copy of the document to the Secretary. The importer also shall cause a copy of the entry document to accompany the peanut lot and be presented to the inspection service at the inland destination of the lot.

(2) The importer shall file with the Secretary copies of the entry document and grade, aflatoxin, and lot identification certifications sufficient to account for all peanuts in each lot listed on the entry document filed by the importer. Positive lot identification of residual lots, transfer certificates, and other documentation showing inedible disposition or export, such as bills of lading and sales receipts, export declarations, or certificates of burying, which report the weight of peanuts being disposed and the name, address and telephone number of the inedible peanut receiver, must be sent to the Marketing Order Administration Branch, Attn: Report of Imported Peanuts. Facsimile transmissions and overnight mail may be used to ensure timely receipt of inspection certificates and other documentation. Fax reports should be sent to (202) 720–5698. Overnight and express mail deliveries should be addressed to USDA, AMS, Marketing Order Administration Branch, 14th and Independence Avenue, SW, Room: 2525–S, Washington, D.C., 20250, Attn: Report of Imported Peanuts. Regular mail should be sent to AMS, USDA, P.O. Box 96456, room 2526–S, Washington, DC 20090–6456, Attn: Report of Imported Peanuts. Telephone inquiries should be made to (202) 720–6862.

(3) Certificates and other documentation for each peanut lot must be filed within 23 days of the date of filing for consumption entry, or, if a redelivery notice is issued on the peanut lot, subsequently filed prior to conclusion of the redelivery period which will be 60 days, unless otherwise specified by the Customs Service.

(4) The Secretary shall ask the Customs Service to issue a redelivery demand for foreign produced peanut lots failing to meet requirements of this section. Extensions in a redelivery period granted by the Customs Service will be correspondingly extended by the Secretary, upon request of the importer. Importers unable to account for the disposition of all peanuts covered in a redelivery order, or redeliver such peanuts, shall be liable for liquidated damages. Failure to fully comply with quality and handling requirements or failure to notify the Secretary of disposition of all foreign produced peanuts, as required under this section, may result in a compliance investigation by the Secretary. Falsification of reports submitted to the Secretary is a violation of Federal law punishable by fine or imprisonment, or both.

(5) *Reinspection.* Whenever the Secretary has reason to believe that peanuts may have been damaged or deteriorated while in storage, the Secretary may reject the then effective inspection certificate and may require the importer to have the peanuts reinspected to establish whether or not such peanuts may be disposed of for human consumption.

(6) *Early arrival and storage.* Peanut lots sampled and inspected upon arrival in the United States, but placed in storage for more than one month prior to beginning of the quota year for which the peanuts will be entered, must be reported to AMS at the time of inspection. The importer shall file copies of the Customs Service documentation, copies of the lot's grade and aflatoxin certificates, and the city, street address and any identifying number of the storage warehouse. Such peanuts should be stored in clean, dry warehouses and under cold storage conditions consistent with industry standards. Pursuant to paragraph (f)(5) of this section, the Secretary may require reinspection of the lot at the time the lot is declared for entry with the Customs Service.

(g) *Additional requirements.* (1) Nothing contained in this section shall preclude any importer from milling or reconditioning, prior to importation, any shipment of peanuts for the purpose of making such lot eligible for importation into the United States. However, all peanuts presented for entry for human consumption use must be certified as meeting the quality requirements specified in paragraph (c) of this section.

(2) Conditionally released peanut lots of like quality and belonging to the same importer may be commingled. Defects in an inspected lot may not be blended out by commingling with other lots of higher quality. Commingling also must be consistent with applicable Customs Service regulations. Commingled lots must be reported and disposed of pursuant to paragraphs (f)(2) and (f)(3) of this section.

(3) Inspection by the Federal or Federal-State Inspection Service shall be available and performed in accordance with the rules and regulations governing certification of fresh fruits, vegetables and other products (7 CFR part 51). The importer shall make each conditionally released lot available and accessible for inspection as provided herein. Because inspectors may not be stationed in the immediate vicinity of some ports-of-entry, importers must make arrangements for sampling, inspection, and certification through one of the offices and laboratories listed in paragraphs (d)(3) and (d)(4) of this section, respectively.

(4) Imported peanut lots sampled and inspected at the port-of-entry, or at other locations, shall meet the quality requirements of this section in effect on the date of inspection.

(5) A foreign-produced peanut lot entered for consumption or for warehouse may be transferred or sold to another person: *Provided,* That the original importer shall be the importer of record unless the new owner applies for bond and files Customs Service documents pursuant to 19 CFR §§ 141.113 and 141.20; and *Provided further,* That such peanuts must be certified and reported to the Secretary pursuant to paragraphs (f)(2) and (f)(3) of this section.

(6) The cost of transportation, sampling, inspection, certification, chemical analysis, and identification, as well as remilling and blanching, and further inspection of remilled and blanched lots, and disposition of failing peanuts, shall be borne by the importer. Whenever peanuts are presented for inspection, the importer shall furnish any labor and pay any costs incurred in moving, opening containers, and shipment of samples as may be necessary for proper sampling and inspection. The inspection service shall bill the importer for fees covering quality and size inspections; time for sampling; packaging and delivering aflatoxin samples to laboratories; certifications of lot identification and lot transfer to other locations, and other inspection certifications as may be necessary to verify edible quality or inedible disposition, as specified herein. The USDA and PAC-approved laboratories shall bill the importer

separately for fees for aflatoxin assay. The importer also shall pay all required Customs Service costs as required by that agency.

(7) Each person subject to this section shall maintain true and complete records of activities and transactions specified in these regulations. Such records and documentation accumulated during entry shall be retained for not less than two years after the calendar year of acquisition, except that Customs Service documents shall be retained as required by that agency. The Secretary, through duly authorized representatives, shall have access to any such person's premises during regular business hours and shall be permitted, at any such time, to inspect such records and any peanuts held by such person.

(8) The provisions of this section do not supersede any restrictions or prohibitions on peanuts under the Federal Plant Quarantine Act of 1912, the Federal Food, Drug and Cosmetic Act, any other applicable laws, or regulations of other Federal agencies, including import regulations and procedures of the Customs Service.

Dated: October 1, 1996.

Sharon Bomer Lauritsen,

Acting Director, Fruit and Vegetable Division.

[FR Doc. 96–25519 Filed 10–3–96; 8:45 am]

BILLING CODE 3410–02–P

NUCLEAR REGULATORY COMMISSION

10 CFR Parts 30, 32, 40, 50, 52, 60, 61, 70, 71, 72, 110, and 150

RIN 3150–AF35

Deliberate Misconduct by Unlicensed Persons

AGENCY: Nuclear Regulatory Commission.

ACTION: Proposed rule.

SUMMARY: The Nuclear Regulatory Commission (NRC) is proposing to revise its regulations to extend the Deliberate Misconduct Rule to six categories of persons: applicants for NRC licenses; applicants for, or holders of, certificates of compliance; applicants for, or holders of, early site permits, standard design certifications, or combined licenses for nuclear power plants; applicants for, or holders of, certificates of registration; applicants for, or holders of, quality assurance program approvals; and the employees, contractors, subcontractors and consultants of the first five categories of persons, so that they may be subject to enforcement action for deliberate misconduct. Deliberate misconduct may involve providing information that is known to be incomplete or inaccurate and in some respect material to the NRC, or it may involve conduct that causes or would have caused, if not detected, a licensee, certificate holder, or applicant to be in violation of any of the Commission's requirements.

DATES: The comment period expires December 18, 1996. Comments received after this date will be considered if it is practical to do so, but the Commission is able to assure consideration only for comments received on or/ before this date.

ADDRESSES: Comments may be sent to: Secretary, U.S. Nuclear Regulatory Commission, Washington, DC 20555–0001. Attn: Docketing and Service Branch. Hand deliver comments to 11555 Rockville Pike, Maryland, between 7:45 am and 4:15 pm on Federal workdays.

FOR FURTHER INFORMATION CONTACT: Tony DiPalo, Office of Nuclear Regulatory Research, U.S. Nuclear Regulatory Commission, Washington, DC 20555–0001, telephone (301) 415–6191, e-mail, ajd@nrc.gov.

SUPPLEMENTARY INFORMATION:

Background

On August 15, 1991 (56 FR 40664), the Commission adopted changes to NRC regulations that established the Deliberate Misconduct Rule found at 10 CFR 30.10, 40.10, 50.5, 60.11, 61.9b, 70.10, 72.12, and 110.7b, which applies to any licensee or any employee of a licensee; and any contractor (including a supplier or consultant), subcontractor, or any employee of a contractor or subcontractor, of any licensee. In addition, 10 CFR 150.2 makes the rule applicable to persons conducting activities under reciprocity in areas of NRC jurisdiction, (see 10 CFR 150.20). The Deliberate Misconduct Rule placed licensed and unlicensed persons on notice that they may be subject to enforcement action for deliberate misconduct that causes or would have caused, if not detected, a licensee to be in violation of any of the Commission's requirements, or for deliberately providing to the NRC, a licensee, or contractor, information that is incomplete or inaccurate in some respect material to the NRC. The rule also revised the NRC's procedures for issuing orders to include persons not licensed by the Commission, but who are otherwise subject to the Commission's statutory authority.

Currently, the Deliberate Misconduct Rule does not apply to:

(1) Applicants for NRC licenses;

(2) Applicants for, or holders of, certificates of compliance issued under 10 CFR Parts 71 and 72, including those for dry cask storage;

(3) Applicants for, or holders of, early site permits, standard design certifications, or combined licenses for nuclear power plants issued under 10 CFR Part 52;

(4) Applicants for, or holders of, certificates of registration issued under 10 CFR Parts 30 and 32;

(5) Applicants for, or holders of, quality assurance program approvals issued under 10 CFR Part 71; and

(6) The employees, contractors, subcontractors, and consultants of the first five categories of persons.

To ensure that these persons are subject to enforcement action for wrongdoing under the Deliberate Misconduct Rule, the NRC is proposing to extend the rule to them. The Commission's proposed rule would also add the Deliberate Misconduct Rule to 10 CFR Parts 52 and 71 where it currently does not appear.

The Commission does not believe that it is necessary to add the Deliberate Misconduct Rule to 10 CFR Part 54 because licensees applying to renew their operating licenses for nuclear power plants are already subject to this rule as licensees under 10 CFR Part 50. Similarly, the Commission does not believe that it is necessary to add the Deliberate Misconduct Rule to 10 CFR Part 55 because applicants for, and holders of, reactor operators licenses are already subject to this rule as employees of 10 CFR Part 50 licensees. Moreover, licensed operators are subject to all applicable Commission requirements (see 10 CFR 55.53(d)) and thus a finding of deliberate misconduct is not required to take enforcement action against a licensed reactor operator.

Discussion

It is important that all information provided to the NRC be complete and accurate in all material respects. Section 186 of the Atomic Energy Act of 1954, as amended (AEA), underscores this need by providing that ''[a] license may be revoked for any material false statement in the application or any statement of fact required [by statute or regulation]. * * *'' The Commission has promulgated rules concerning completeness and accuracy of information that specifically apply to information provided to the Commission by a licensee or an applicant for a license (see 10 CFR 30.9(a), 40.9(a), 50.9(a), 60.10(a), 61.9a(a), 70.9(a), 71.7a, 72.11(a), 76.9(a) and 110.7a(a)). Similarly, paragraph (b)

of each of these sections, which deals with notification to the Commission of significant safety information, refers to applicants as well as licensees. Violation of these provisions can result in denial of the license application, civil enforcement action against a licensee, or, if appropriate, referral to the Department of Justice for consideration for criminal prosecution.

The Deliberate Misconduct Rule permits the NRC to take individual action, such as issuing an order, against an individual who deliberately provides information that the individual knows to be incomplete or inaccurate. However, when the Deliberate Misconduct Rule was promulgated, it did not address applicants for licenses, applicants for, and holders of, certificates of compliance or certificates of registration, applicants for, and holders of, early site permits, certified designs and combined licenses, and applicants for, and holders of, quality assurance program approvals.

Incomplete or inaccurate information has potential safety significance, whether submitted before or after a license, certificate, permit, or approval has been issued. The Commission has clearly emphasized the importance of applications containing accurate information; e.g., ''[The Commission] cannot overstate the importance of a licensee's or an applicant's duty to provide the Commission with accurate information.'' *Randall C. Orem. D.O.*, CLI–93–14, 37 NRC 423 (1993). The *Orem* case involved a consultant to an applicant for a license who provided inaccurate information that was included in the license application and the Commission found that information as to the status of the facility was material to the licensing decision. *Id.* at 428.

The Commission believes that there may be significant safety consequences from the deliberate submission of false or incomplete information or other deliberate wrongdoing by an applicant for a license or other unlicensed persons proposed to be covered by this modification to the Deliberate Misconduct Rule. For example, a spent fuel cask that is certified by the NRC on the basis of falsified test data could represent a threat to public health and safety. Similarly, a quality assurance program that is submitted to the NRC for approval but is supported by deliberately falsified data that mask a significant defect could also be a public health and safety threat. Under the present Deliberate Misconduct Rule, a certificate holder who obtained a certificate by deliberate submittal of false information could escape individual NRC enforcement action because the deliberate misconduct may not have put an ''NRC licensee'' in violation. To effectively exercise its authority under the AEA, the Commission needs to prevent or otherwise deter the deliberate submittal of materially false or inaccurate information by those entities not currently covered by the rule. The NRC knows of no reason why the rule should not apply to persons who deliberately submit materially incomplete or inaccurate information, whether such submittal is by or on behalf of an applicant, or by or on behalf of a holder of a license, certificate, permit, or approval.

The Commission proposes to modify the Deliberate Misconduct Rule each place it appears in 10 CFR Chapter I to make the rule apply to applicants for NRC licenses; to applicants for, and holders of, certificates of compliance issued under 10 CFR Parts 71 and 72; to applicants for, and holders of, early site permits, certified designs, and combined licenses for nuclear power plants issued under 10 CFR Part 52; to applicants for, and holders of, certificates of registration issued under Parts 30 and 32; and to applicants for, and holders of, quality assurance program approvals issued under Part 71; and to the employees, contractors, subcontractors and consultants of all the above categories of persons. This would include, for example, a consultant engaged by an applicant to prepare a license application for such activities as radiography, well logging, irradiation, and teletherapy. It would also apply to a consultant preparing an application for a certificate for a spent fuel cask, or individuals conducting performance tests to support such an application.

The proposed revisions to the Deliberate Misconduct Rule would appear in 10 CFR 30.10, 40.10, 50.5, 60.11, 61.9b, 70.10, 72.12, and 110.7b. Section 71.11 would be added to incorporate the rule in Part 71 and § 52.10 would be added to incorporate the rule in 10 CFR Part 52. In addition, 10 CFR 150.2 and 10 CFR 32.1(b) would be revised to incorporate the proposed changes. The scope provisions found in 10 CFR 30.1, 40.2, 50.1, 52.1, 60.1, 61.1(c), 70.2, 71.0, 72.2, and 110.1(a) would also be modified to reflect these revisions to the rule. The Commission would make a minor language change by altering the phrase ''but for detection'' to ''if not detected'' where the phrase appears in each rule, but intends no substantive change by this revision. Having this enforcement authority available will help the NRC pursue redress in cases of deliberate misconduct by unlicensed persons acting within the scope of the Commission's jurisdiction and may deter such behavior as well.

This rulemaking extending the Deliberate Misconduct Rule to applicants for NRC licenses; applicants for, and holders of, certificates of compliance issued under 10 CFR Parts 71 and 72; applicants for, and holders of, early site permits, standard design certifications, or combined licenses for nuclear power plants issued under 10 CFR Part 52; applicants for, and holders of, certificates of registration issued under 10 CFR Parts 30 and 32; and applicants for, and holders of, quality assurance program approvals issued under 10 CFR Part 71; and to the employees, contractors, subcontractors and consultants of all the above categories of persons, implements the Commission's authority under the AEA to issue regulations and orders to any person (defined in section 11s of the AEA to include, e.g., an individual, corporation, firm, or a Federal, State, or local agency) who engages in conduct affecting activities within the Commission's subject matter jurisdiction.

In brief, section 161i of the AEA provides broad authority to issue regulations and orders as the Commission deems necessary to govern any activity authorized pursuant to the AEA in order to protect public health and safety. Section 161b of the AEA similarly authorizes the Commission to issue regulations and orders to impose ''standards and instructions'' on persons to govern the possession and use of special nuclear material, source material, and byproduct material, as may be necessary or desirable to provide for the common defense and security and protect public health and safety. Section 234 of the AEA authorizes the NRC to impose civil penalties on certain unlicensed persons for violating the NRC's substantive requirements. Section 234a of the AEA (as amended by section 3116, Title III of the Omnibus Appropriations Act of 1996, April 28, 1996) reads as follows:

> Any person who (1) violates any licensing or certification provision of sections 53, 57, 62, 63, 81, 82, 101, 103, 104, 107, 109, or 1701 of any rule, regulation, or order issued thereunder, or any term, condition, or limitation of any license or certification issued thereunder, or (2) commits any violation for which a license may be revoked under section 186, shall be subject to a civil penalty, to be imposed by the Commission, of not to exceed $100,000 for each such violation.

The licensing provisions listed in section 234a generally prohibit the

possession, use, receipt, or transfer of nuclear materials or facilities unless authorized by and in accordance with a license.

The proposed changes are made under the authority of sections 161b and i and the above-identified licensing and certification provisions in section 234. The changes apply to any person who engages in deliberate misconduct, or who deliberately submits materially incomplete or inaccurate information, as provided in the rule. By imposing a direct prohibition on unlicensed persons, the Commission may be able to exercise its section 234 authority to impose civil penalties on unlicensed persons who deliberately cause a licensee, applicant, or permit or certificate holder to be in violation of requirements because they are persons who violate the licensing provisions enumerated in section 234. In cases when the Commission issues an order (other than an order imposing a civil penalty) to a person based on deliberate misconduct that causes a licensee, applicant, or permit or certificate holder to be in violation of a Commission requirement, the order would be issued in part pursuant to a regulation (e.g., § 30.10) that was promulgated under a licensing provision of the AEA. A civil penalty could be available for violations of such an order. In addition, criminal sanctions under section 223 of the AEA are available for willful violations of orders and regulations issued under sections 161b and i. Injunctions are also available under section 232 of the AEA for violations of Commission orders.

Electronic Access

Comments may be submitted electronically, in either ASCII text or WordPerfect format (version 5.1 or later), by calling the NRC Electronic Bulletin Board (BBS) on FedWorld. The bulletin board may be accessed using a personal computer, a modem, and one of the commonly available communications software packages, or directly via Internet. Background documents on the rulemaking are also available, as practical, for downloading and viewing on the bulletin board.

If using a personal computer and modem, the NRC rulemaking subsystem on FedWorld can be accessed directly by dialing the toll-free number (800) 303–9672. Communication software parameters should be set as follows: parity to none, data bits to 8, and stop bits to 1 (N,8,1). Using ANSI or VT–100 terminal emulation, the NRC rulemaking subsystem can then be accessed by selecting the ''Rules Menu'' option from the ''NRC Main Menu.'' Users will find the ''FedWorld Online User's Guides'' particularly helpful. Many NRC subsystems and data bases also have a ''Help/Information Center'' option that is tailored to the particular subsystem.

The NRC subsystem on FedWorld can also be accessed by a directly dialed phone number for the main FedWorld BBS, (703) 321–3339, or by using Telnet via Internet: fedworld.gov. If using (703) 321–3339 to contact FedWorld, the NRC subsystem will be accessed from the main FedWorld menu by selecting the ''Regulatory, Government Administration and State Systems,'' then selecting ''Regulatory Information Mall.'' At that point, a menu will be displayed that has an option ''U.S. Nuclear Regulatory Commission'' that will take you to the NRC Online main menu. The NRC Online area also can be accessed directly by typing ''/go nrc'' at a FedWorld command line. If you access NRC from FedWorld's main menu, you may return to FedWorld by selecting the ''Return to FedWorld'' option from the NRC Online Main Menu. However, if you access NRC at FedWorld by using NRC's toll-free number, you will have full access to all NRC systems, but you will not have access to the main FedWorld system.

If you contact FedWorld using Telnet, you will see the NRC area and menus, including the Rules Menu. Although you will be able to download documents and leave messages, you will not be able to write comments or upload files (comments). If you contact FedWorld using FTP, all files can be accessed and downloaded but uploads are not allowed; all you will see is a list of files without descriptions (normal Gopher look). An index file listing all files within a subdirectory, with descriptions, is available. There is a 15-minute time limit for FTP access.

Although FedWorld also can be accessed through the World Wide Web, like FTP, that mode only provides access for downloading files and does not display the NRC Rules Menu.

For more information on NRC bulletin boards call Mr. Arthur Davis, Systems Integration and Development Branch, NRC, Washington, DC 20555–0001, telephone (301) 415–5780; e-mail AXD3@nrc.gov.

Certain documents related to this rulemaking, including comments received, may be examined at the NRC Public Document Room, 2120 L Street NW. (Lower Level), Washington, DC. These same documents may also be viewed and downloaded electronically via the Electronic Bulletin Board established by NRC for this rulemaking as indicated in the Supplementary Information section.

Compatibility of Agreement State Regulations

This rule is designated a Division-3 matter of compatibility with respect to Agreement State regulations because it deals with enforcement actions such as the issuance of orders and civil penalties to unlicensed persons for deliberate misconduct. In addition to license applicants, these changes expand applicability of the rule to include persons such as certificate holders and quality assurance program approval holders. Such actions are addressed individually by States through each State's administrative code. Division-3 regulations are appropriate for Agreement States to adopt, but do not require any degree of uniformity between the NRC and Agreement State rules. Agreement States are not required to adopt the regulatory approach identified in Division-3 regulations.

Environmental Impact: Categorical Exclusion

The NRC has determined that this proposed rule relates to enforcement matters and, therefore, falls within the scope of 10 CFR 51.10(d). Therefore, neither an environmental impact statement nor an environmental assessment has been prepared for this proposed rule.

Paperwork Reduction Act Statement

This proposed rule does not contain a new or amended information collection requirement subject to the Paperwork Reduction Act of 1995 (44 U.S.C. 3501, et seq.). Existing requirements were approved by the Office of Management and Budget, approval numbers 3150–0017, 3150–0151, 3150–0127, 3150–0135, 3150–0009, 3150–0132, 3150–0036, and 3150–0032.

Public Protection Notification

The NRC may not conduct or sponsor, and a person is not required to respond to, a collection of information unless it displays a currently valid OMB control number.

Regulatory Analysis

The NRC has statutory authority to issue enforcement actions against unlicensed persons whose deliberate misconduct causes a licensee or a certificate holder or an applicant for a license or certificate to be in violation of the Commission's requirements. On August 15, 1991 (56 FR 40664) the NRC promulgated the Deliberate Misconduct Rule which put licensed and unlicensed persons on notice that they may be subject to enforcement action for

deliberate misconduct that causes or, if not detected, would cause a licensee to be in violation of any of the Commission's requirements or for deliberately providing to the NRC, a licensee, or a contractor information that is incomplete or inaccurate in some respect material to the NRC. However, the Deliberate Misconduct Rule does not specifically apply to:

(1) Applicants for NRC licenses;

(2) Applicants for, and holders of, certificates of compliance issued under 10 CFR Parts 71 and 72;

(3) Applicants for, and holders of, early site permits, standard design certifications, or combined licenses for nuclear power plants issued under 10 CFR Part 52;

(4) Applicants for, and holders of, certificates of registration issued under 10 CFR Parts 30 and 32;

(5) Applicants for, and holders of, quality assurance program approvals issued under 10 CFR Part 71; and

(6) The employees, contractors, subcontractors and consultants of the first five categories of persons.

On November 29, 1991, the NRC staff issued an Order Revoking License to Dr. Randall C. Orem after the NRC staff learned that information in his license application was false and that the application had been prepared by a consultant who had provided the false information. *See Randall C. Orem, D.O.,* CLI–93–14, 37 NRC 423 (1993). In this case, the NRC staff realized that under the provisions of the existing Deliberate Misconduct Rule, it was unable to take additional enforcement action against Dr. Orem and was precluded from taking enforcement action against the consultant because the consultant was working for an applicant rather than for a licensee. Subsequently, the Commission realized that other categories of persons within NRC jurisdiction had not been explicitly included within the Deliberate Misconduct Rule; e.g., certificate holders under 10 CFR Parts 71 and 72 and holders of early site permits, certified design certifications and combined licenses under 10 CFR Part 52.

The Commission believes that there may be significant safety consequences from the deliberate submission of false or incomplete information or other deliberate wrongdoing by an applicant for a license or other unlicensed persons proposed to be covered by this modification to the Deliberate Misconduct Rule. For example, a spent fuel cask that is certified by the NRC on the basis of falsified test data could represent a threat to public health and safety. Similarly, a quality assurance program that is submitted to the NRC for approval but is supported by deliberately falsified data that mask a significant defect could also be a public health and safety threat. The potential for injury is serious. The NRC knows of no reason why the Deliberate Misconduct Rule should not apply to persons who deliberately submit materially incomplete or inaccurate information, whether that submittal is by or on behalf of an applicant, or by or on behalf of a holder of a license, certificate, permit, or approval.

The objective of the rule is to explicitly put those persons encompassed by this modification of the Deliberate Misconduct Rule on notice that enforcement action may be taken against them for deliberate misconduct or deliberate submission of incomplete or inaccurate information, in relation to NRC licensed activities. Under section 234 of the Atomic Energy Act, the Commission may impose civil penalties on any person who violates any rule, regulation, or order issued under any one of the enumerated provisions of the Act, or who commits a violation for which a license may be revoked. The enforcement actions that may be taken, including orders limiting activities of wrongdoers in the future and civil penalties, will serve as a deterrent to others throughout the industry.

The NRC's available alternatives are to promulgate a modification of the Deliberate Misconduct Rule, as is proposed herein, or do nothing. Because a case has already occurred where the NRC was precluded from taking appropriate enforcement action against a consultant to an applicant and there was potential harm to the public, the alternative of doing nothing was rejected. The benefits of taking enforcement action are similar to those of taking action against licensed entities in that a civil penalty and attendant adverse publicity encourage future compliance. The Notice of Violation calls for a precise response regarding the corrective action taken. An enforcement order, if obeyed, will directly control the involvement of an individual in a licensed activity. The effect of having these options available in the enforcement program should reduce the probability of repetitive violations by wrongdoers.

The NRC does not anticipate that additional investigations will be necessary to implement the rule because it focuses on the results of investigations. Based on experience, the NRC expects fewer than 10 additional cases per year to result in enforcement action being taken against unlicensed individuals. The cost of preparing and publishing the additional actions beyond the current workload is not significant.

The proposed amendments to the Deliberate Misconduct Rule constitute the preferred course of action. The cost involved in its promulgation and application is necessary and appropriate. The foregoing discussion constitutes the regulatory analysis for this rule.

Regulatory Flexibility Certification

In accordance with the Regulatory Flexibility Act of 1980, 5 U.S.C. 605(b), the Commission certifies that this proposed rule, if adopted, will not have a significant economic impact on a substantial number of small entities. The proposed rule would put: (1) applicants for NRC licenses; (2) applicants for, and holders of, certificates of compliance issued under 10 CFR Parts 71 and 72, including those for dry cask storage; (3) applicants for, and holders of, early site permits, standard design certifications, or combined licenses issued under 10 CFR Part 52; (4) applicants for, and holders of, certificates of registration issued under 10 CFR Parts 30 and 32; (5) applicants for, and holders of, quality assurance program approvals issued under 10 CFR Part 71; and (6) the employees, contractors, subcontractors and consultants of the first five categories of persons on notice that they are subject to the Deliberate Misconduct Rule and, therefore, are subject to civil enforcement action if they deliberately cause a licensee, certificate holder, or an applicant for a license or certificate to be in violation of NRC requirements. The proposed rule, by itself, would not impose any additional obligations on entities that may fall within the definition of ''small entities'' as set forth in Section 601(3) of the Regulatory Flexibility Act; or within the definition of ''small business'' as found in Section 3 of the Small Business Act, 15 U.S.C. 632; or within the size standards adopted by the NRC on April 11, 1995 (60 FR 18344).

Backfit Analysis

The NRC has determined that the backfit rule, 10 CFR 50.109, does not apply to this proposed rule and, therefore, a backfit analysis is not required for this proposed rule because these amendments do not involve any provisions that would impose backfits as defined in 10 CFR 50.109(a)(1).

List of Subjects

10 CFR Part 30

Byproduct material, Criminal penalties, Government contracts, Intergovernmental relations, Isotopes, Nuclear materials, Radiation protection, Reporting and recordkeeping requirements.

10 CFR Part 32

Byproduct material, Criminal penalties, Labeling, Nuclear materials, Radiation protection, Reporting and recordkeeping requirements.

10 CFR Part 40

Criminal penalties, Government contracts, Hazardous materials transportation, Nuclear materials, Reporting and recordkeeping requirements, Source material, Uranium.

10 CFR Part 50

Antitrust, Classified information, Criminal penalties, Fire protection, Intergovernmental relations, Nuclear power plants and reactors, Radiation protection, Reactor siting criteria, Reporting and recordkeeping requirements.

10 CFR Part 52

Administrative practice and procedure, Antitrust, Backfitting, Combined license, Early site permit, Emergency planning, Fees, Inspection, Limited work authorization, Nuclear power plants and reactors, Probabilistic risk assessment, Prototype, Reactor siting criteria, Redress of site, Reporting and recordkeeping requirements, Standard design, Standard design certification.

10 CFR Part 60

Criminal penalties, High-level waste, Nuclear power plants and reactors, Nuclear materials, Reporting and recordkeeping requirements, Waste treatment and disposal.

10 CFR Part 61

Criminal penalties, Low-level waste, Nuclear materials, Reporting and recordkeeping requirements, Waste treatment and disposal.

10 CFR Part 70

Criminal penalties, Hazardous materials transportation, Material control and accounting, Nuclear materials, Packaging and containers, Radiation protection, Reporting and recordkeeping requirements, Scientific equipment, Security measures, Special nuclear material.

10 CFR Part 71

Criminal penalties, Hazardous materials transportation, Nuclear materials, Packaging and containers, Reporting and recordkeeping requirements.

10 CFR Part 72

Manpower training programs, Nuclear materials, Occupational safety and health, Reporting and recordkeeping requirements, Security measures, Spent fuel.

10 CFR Part 110

Administrative practice and procedure, Classified information, Criminal penalties, Export, Import, Intergovernmental relations, Nuclear materials, Nuclear power plants and reactors, Reporting and recordkeeping requirements, Scientific equipment.

10 CFR Part 150

Criminal penalties, Hazardous materials transportation, Intergovernmental relations, Nuclear materials, Reporting and recordkeeping requirements, Security measures, Source material, Special nuclear material.

For the reasons stated in the preamble and under the authority of the Atomic Energy Act of 1954, as amended; the Energy Reorganization Act of 1974, as amended; and 5 U.S.C. 553; the NRC is proposing to adopt the following amendments to 10 CFR Parts 30, 32, 40, 50, 52, 60, 61, 70, 71, 72, 110, and 150.

PART 30—RULES OF GENERAL APPLICABILITY TO DOMESTIC LICENSING OF BYPRODUCT MATERIAL

1. The authority citation for Part 30 continues to read as follows:

Authority: Secs. 81, 82, 161, 182, 183, 186, 68 Stat. 935, 948, 953, 954, 955, as amended, sec. 234, 83 Stat. 444, as amended (42 U.S.C. 2111, 2112, 2201, 2232, 2233, 2236, 2282); secs. 201, as amended, 202, 206, 88 Stat. 1242, as amended, 1244, 1246 (42 U.S.C. 5841, 5842, 5846).

Section 30.7 also issued under Pub. L. 95–601, sec. 10, 92 Stat. 2951 as amended by Pub. L. 102–486, sec. 2902, 106 Stat. 3123, (42 U.S.C. 5851). Section 30.34(b) also issued under sec. 184, 68 Stat. 954, as amended (42 U.S.C. 2234). Section 30.61 also issued under sec. 187, 68 Stat. 955 (42 U.S.C. 2237).

2. Section 30.1 is revised to read as follows:

§ 30.1 Scope.

This part prescribes rules applicable to all persons in the United States governing domestic licensing of byproduct material under the Atomic Energy Act of 1954, as amended (68 Stat. 919), and under title II of the Energy Reorganization Act of 1974 (88 Stat. 1242), and exemptions from the domestic licensing requirements permitted by section 81 of the Act. This part also gives notice to all persons who knowingly provide to any licensee, applicant, certificate of registration holder, contractor, or subcontractor, components, equipment, materials, or other goods or services, that relate to a licensee's, applicant's or certificate of registration holder's activities subject to this part, that they may be individually subject to NRC enforcement action for violation of § 30.10.

3. Section 30.10 is revised to read as follows:

§ 30.10 Deliberate misconduct.

(a) Any licensee, certificate of registration holder, applicant for a license or certificate of registration, employee of a licensee, certificate of registration holder or applicant; or any contractor (including a supplier or consultant), subcontractor, employee of a contractor or subcontractor of any licensee or applicant for a license or certificate of registration, who knowingly provides to any licensee, applicant, certificate holder, contractor, or subcontractor, any components, equipment, materials, or other goods or services that relate to a licensee's, certificate holder's or applicant's activities in this part, may not:

(1) Engage in deliberate misconduct that causes or would have caused, if not detected, a licensee, certificate of registration holder, or applicant to be in violation of any rule, regulation, or order; or any term, condition, or limitation of any license issued by the Commission; or

(2) Deliberately submit to the NRC, a licensee, certificate of registration holder, an applicant, or a licensee's, certificate holder's or applicant's, contractor or subcontractor, information that the person submitting the information knows to be incomplete or inaccurate in some respect material to the NRC.

(b) A person who violates paragraph (a)(1) or (a)(2) of this section may be subject to enforcement action in accordance with the procedures in 10 CFR Part 2, subpart B.

(c) For the purposes of paragraph (a)(1) of this section, deliberate misconduct by a person means an intentional act or omission that the person knows:

(1) Would cause a licensee, certificate of registration holder or applicant to be in violation of any rule, regulation, or order; or any term, condition, or

limitation, of any license issued by the Commission; or

(2) Constitutes a violation of a requirement, procedure, instruction, contract, purchase order, or policy of a licensee, certificate of registration holder, applicant, contractor, or subcontractor.

PART 32—SPECIFIC DOMESTIC LICENSES TO MANUFACTURE OR TRANSFER CERTAIN ITEMS CONTAINING BYPRODUCT MATERIAL

4. The authority citation for Part 32 continues to read as follows:

Authority: Secs. 81, 161, 182, 183, 68 Stat. 935, 948, 953, 954, as amended (42 U.S.C. 2111, 2201, 2232, 2233); sec. 201, 88 Stat. 1242, as amended (42 U.S.C. 5841).

5. Section 32.1(b) is revised to read as follows:

§ 32.1 Purpose and scope.

* * * * *

(b) The provisions and requirements of this part are in addition to, and not in substitution for, other requirements of this chapter. In particular, the provisions of Part 30 of this chapter apply to applications, licenses, and certificates of registration subject to this part.

PART 40—DOMESTIC LICENSING OF SOURCE MATERIAL

6. The authority citation for Part 40 continues to read as follows:

Authority: Secs. 62, 63, 64, 65, 81, 161, 182, 183, 186, 68 Stat. 932, 933, 935, 948, 953, 954, 955, as amended, secs. 11e(2), 83, 84, Pub. L. 95 604, 92 Stat. 3033, as amended, 3039, sec. 234, 83 Stat. 444, as amended (42 U.S.C. 2014(e)(2), 2092, 2093, 2094, 2095, 2111, 2113, 2114, 2201, 2232, 2233, 2236, 2282); sec. 274, Pub. L. 86–373, 73 Stat. 688 (42 U.S.C. 2021); secs. 201, as amended, 202, 206, 88 Stat. 1242, as amended, 1244, 1246 (42 U.S.C. 5841, 5842, 5846); sec. 275, 92 Stat. 3021, as amended by Pub. L. 97–415, 96 Stat. 2067 (42 U.S.C. 2022).

Section 40.7 also issued under Pub. L. 95–601, sec. 10, 92 Stat. 2951 as amended by Pub. L. 102–486, sec 2902, 106 Stat. 3123, (42 U.S.C. 5851). Section 40.31(g) also issued under sec. 122, 68 Stat. 939 (42 U.S.C. 2152). Section 40.46 also issued under sec. 184, 68 Stat. 954, as amended (42 U.S.C. 2234). Section 40.71 also issued under sec. 187, 68 Stat. 955 (42 U.S.C. 2237).

7. Section 40.2 is revised to read as follows:

§ 40.2 Scope.

Except as provided in §§ 40.11 to 40.14, inclusive, the regulations in this part apply to all persons in the United States. This part also gives notice to all persons who knowingly provide to any licensee, applicant, contractor, or subcontractor, components, equipment, materials, or other goods or services, that relate to a licensee's or applicant's activities subject to this part, that they may be individually subject to NRC enforcement action for violation of § 40.10.

8. Section 40.10 is revised to read as follows:

§ 40.10 Deliberate misconduct.

(a) Any licensee, applicant for a license, employee of a licensee or applicant; or any contractor (including a supplier or consultant), subcontractor, employee of a contractor or subcontractor of any licensee or applicant for a license, who knowingly provides to any licensee, applicant, contractor, or subcontractor, any components, equipment, materials, or other goods or services that relate to a licensee's or applicant's activities in this part, may not:

(1) Engage in deliberate misconduct that causes or would have caused, if not detected, a licensee or applicant to be in violation of any rule, regulation, or order; or any term, condition, or limitation of any license issued by the Commission; or

(2) Deliberately submit to the NRC, a licensee, an applicant, or a licensee's or applicant's contractor or subcontractor, information that the person submitting the information knows to be incomplete or inaccurate in some respect material to the NRC.

(b) A person who violates paragraph (a)(1) or (a)(2) of this section may be subject to enforcement action in accordance with the procedures in 10 CFR Part 2, subpart B.

(c) For the purposes of paragraph (a)(1) of this section, deliberate misconduct by a person means an intentional act or omission that the person knows:

(1) Would cause a licensee or applicant to be in violation of any rule, regulation, or order; or any term, condition, or limitation, of any license issued by the Commission; or

(2) Constitutes a violation of a requirement, procedure, instruction, contract, purchase order, or policy of a licensee, applicant, contractor, or subcontractor.

PART 50—DOMESTIC LICENSING OF PRODUCTION AND UTILIZATION FACILITIES

9. The authority citation for Part 50 continues to read as follows:

Authority: Secs. 102, 103, 104, 105, 161, 182, 183, 186, 189, 68 Stat. 936, 937, 938, 948, 953, 954, 955, 956, as amended, sec. 234, 83 Stat. 1244, as amended (42 U.S.C. 2132, 2133, 2134, 2135, 2201, 2232, 2233, 2236, 2239, 2282); secs. 201, as amended, 202, 206, 88 Stat. 1242, as amended, 1244, 1246 (42 U.S.C. 5841, 5842, 5846).

Section 50.7 also issued under Pub. L. 95–601, sec. 10, 92 Stat. 2951 as amended by Pub. L. 102–486, sec. 2902, 106 Stat 3123, (42 U.S.C. 5851). Section 50.10 also issued under secs. 101, 185, 68 Stat. 936, 955, as amended (42 U.S.C. 2131, 2235); sec. 102, Pub. L. 91–190, 83 Stat. 853 (42 U.S.C. 4332). Sections 50.13, 50.54(dd), and 50.103 also issued under sec. 108, 68 Stat. 939, as amended (42 U.S.C. 2138). Sections 50.23, 50.35, 50.55, and 50.56 also issued under sec. 185, 68 Stat. 955 (42 U.S.C. 2235). Sections 50.33a, 50.55a and Appendix Q also issued under sec. 102, Pub. L. 91–190, 83 Stat. 853 (42 U.S.C. 4332). Sections 50.34 and 50.54 also issued under sec. 204, 88 Stat. 1245 (42 U.S.C. 5844). Sections 50.58, 50.91, and 50.92 also issued under Pub. L. 97–415, 96 Stat. 2073 (42 U.S.C. 2239). Section 50.78 also issued under sec. 122, 68 Stat. 939 (42 U.S.C. 2152). Sections 50.80–50.81 also issued under sec. 184, 68 Stat. 954, as amended (42 U.S.C. 2234). Appendix F also issued under sec. 187, 68 Stat. 955 (42 U.S.C 2237).

10. Section 50.1 is revised to read as follows:

§ 50.1 Basis, purpose, and procedures applicable.

The regulations in this part are promulgated by the Nuclear Regulatory Commission pursuant to the Atomic Energy Act of 1954, as amended (68 Stat. 919), and Title II of the Energy Reorganization Act of 1974 (88 Stat. 1242), to provide for the licensing of production and utilization facilities. This part also gives notice to all persons who knowingly provide to any licensee, applicant, contractor, or subcontractor, components, equipment, materials, or other goods or services, that relate to a licensee's or applicant's activities subject to this part, that they may be individually subject to NRC enforcement action for violation of § 50.5.

11. Section 50.5 is revised to read as follows:

§ 50.5 Deliberate misconduct.

(a) Any licensee, applicant for a license, employee of a licensee or applicant; or any contractor (including a supplier or consultant), subcontractor, employee of a contractor or subcontractor of any licensee or applicant for a license, who knowingly provides to any licensee, applicant, contractor, or subcontractor, any components, equipment, materials, or other goods or services that relate to a licensee's or applicant's activities in this part, may not:

(1) Engage in deliberate misconduct that causes or would have caused, if not detected, a licensee or applicant to be in violation of any rule, regulation, or

order; or any term, condition, or limitation of any license issued by the Commission; or

(2) Deliberately submit to the NRC, a licensee, an applicant, or a licensee's or applicant's contractor or subcontractor, information that the person submitting the information knows to be incomplete or inaccurate in some respect material to the NRC.

(b) A person who violates paragraph (a)(1) or (a)(2) of this section may be subject to enforcement action in accordance with the procedures in 10 CFR Part 2, subpart B.

(c) For the purposes of paragraph (a)(1) of this section, deliberate misconduct by a person means an intentional act or omission that the person knows:

(1) Would cause a licensee or applicant to be in violation of any rule, regulation, or order; or any term, condition, or limitation, of any license issued by the Commission; or

(2) Constitutes a violation of a requirement, procedure, instruction, contract, purchase order, or policy of a licensee, applicant, contractor, or subcontractor.

PART 52—EARLY SITE PERMITS; STANDARD DESIGN CERTIFICATIONS; AND COMBINED LICENSES FOR NUCLEAR POWER PLANTS

12. The authority citation for Part 52 continues to read as follows:

Authority: Secs. 103, 104, 161, 182, 183, 186, 189, 68 Stat. 936, 948, 953, 954, 955, 956, as amended, sec. 234, 83 Stat. 1244, as amended (42 U.S.C. 2133, 2201, 2232, 2233, 2236, 2239, 2282); secs. 201, 202, 206, 88 Stat. 1242, 1244, 1246, as amended (42 U.S.C. 5841, 5842, 5846).

13. Section 52.1 is revised to read as follows:

§ 52.1 Scope.

This part governs the issuance of early site permits, standard design certifications, and combined licenses for nuclear power facilities licensed under section 103 or 104b of the Atomic Energy Act of 1954, as amended (68 Stat. 919), and Title II of the Energy Reorganization Act of 1974 (88 Stat. 1242). This part also gives notice to all persons who knowingly provide to any holder of or applicant for an early site permit, standard design certification, or combined license, or to a contractor, subcontractor, or consultant of any of them, components, equipment, materials, or other goods or services, that relate to the activities of a holder of or applicant for an early site permit, standard design certification, or combined license, subject to this part, that they may be individually subject to NRC enforcement action for violation of § 52.10.

14. Section 52.9 is added following § 52.8 and reads as follows:

§ 52.9 Deliberate misconduct.

(a) Any holder of, or applicant for, an early site permit, standard design certification, or combined license, including its employees, contractors, subcontractors, or consultants and their employees, who knowingly provides to any holder of, or applicant for, an early site permit, standard design certification, or combined license, or to a contractor, subcontractor or consultant of any of them, equipment, materials, or other goods or services that relate to the activities of a holder of, or applicant for, an early site permit, standard design certification or combined license in this part, may not:

(1) Engage in deliberate misconduct that causes or would have caused, if not detected, a holder of, or applicant for, an early site permit, standard design certification, or combined license, to be in violation of any rule, regulation, or order; or any term, condition, or limitation of any permit, certification or license issued by the Commission; or

(2) Deliberately submit to the NRC, a holder of, or applicant for, an early site permit, standard design certification, or combined license, or a contractor, subcontractor, or consultant of any of them information that the person submitting the information knows to be incomplete or inaccurate in some respect material to the NRC.

(b) A person who violates paragraph (a)(1) or (a)(2) of this section may be subject to enforcement action in accordance with the procedures in 10 CFR part 2, subpart B.

(c) For the purposes of paragraph (a)(1) of this section, deliberate misconduct by a person means an intentional act or omission that the person knows:

(1) Would cause a holder of, or applicant for, an early site permit, standard design certification, or combined license, to be in violation of any rule, regulation, or order; or any term, condition, or limitation, of any license issued by the Commission; or

(2) Constitutes a violation of a requirement, procedure, instruction, contract, purchase order, or policy of a holder of, or applicant for, an early site permit, certified design or combined license, or a contractor or subcontractor of any of them.

PART 60—DISPOSAL OF HIGH-LEVEL RADIOACTIVE WASTES IN GEOLOGIC REPOSITORIES

15. The authority citation for Part 60 continues to read as follows:

Authority: Secs. 51, 53, 62, 63, 65, 81, 161, 182, 183, 68 Stat. 929, 930, 932, 933, 935, 948, 953, 954, as amended (42 U.S.C. 2071, 2073, 2092, 2093, 2095, 2111, 2201, 2232, 2233); secs. 202, 206, 88 Stat. 1244, 1246 (42 U.S.C. 5842, 5846); secs. 10 and 14, Pub. L. 95–601, 92 Stat. 2951 (42 U.S.C. 2021a and 5851); sec. 102, Pub. L. 91–190, 83 Stat. 853 (42 U.S.C. 4332); secs. 114, 121, Pub. L. 97–425, 96 Stat. 2213g, 2228, as amended (42 U.S.C. 10134, 10141) and Pub. L. 102–486, sec. 2902, 106 Stat. 3123 (42 U.S.C. 5851).

16. Section 60.1 is revised to read as follows:

§ 60.1 Purpose and scope.

This part prescribes rules governing the licensing of the U.S. Department of Energy to receive and possess source, special nuclear, and byproduct material at a geologic repository operations area sited, constructed, or operated in accordance with the Nuclear Waste Policy Act of 1982. This part does not apply to any activity licensed under another part of this chapter. This part also gives notice to all persons who knowingly provide to any licensee, applicant, contractor, or subcontractor, components, equipment, materials, or other goods or services, that relate to a licensee's or applicant's activities subject to this part, that they may be individually subject to NRC enforcement action for violation of § 60.11.

17. Section 60.11 is revised to read as follows:

§ 60.11 Deliberate misconduct.

(a) Any licensee, applicant for a license, employee of a licensee or applicant; or any contractor (including a supplier or consultant), subcontractor, employee of a contractor or subcontractor of any licensee or applicant for a license, who knowingly provides to any licensee, applicant, contractor, or subcontractor, any components, equipment, materials, or other goods or services that relate to a licensee's or applicant's activities in this part, may not:

(1) Engage in deliberate misconduct that causes or would have caused, if not detected, a licensee or applicant to be in violation of any rule, regulation, or order; or any term, condition, or limitation of any license issued by the Commission; or

(2) Deliberately submit to the NRC, a licensee, an applicant, or a licensee's or applicant's contractor or subcontractor, information that the person submitting

the information knows to be incomplete or inaccurate in some respect material to the NRC.

(b) A person who violates paragraph (a)(1) or (a)(2) of this section may be subject to enforcement action in accordance with the procedures in 10 CFR part 2, subpart B.

(c) For the purposes of paragraph (a)(1) of this section, deliberate misconduct by a person means an intentional act or omission that the person knows:

(1) Would cause a licensee or applicant to be in violation of any rule, regulation, or order; or any term, condition, or limitation, of any license issued by the Commission; or

(2) Constitutes a violation of a requirement, procedure, instruction, contract, purchase order, or policy of a licensee, applicant, contractor, or subcontractor.

PART 61—LICENSING REQUIREMENTS FOR LAND DISPOSAL OF RADIOACTIVE WASTE

18. The authority citation for Part 61 continues to read as follows:

Authority: Secs. 53, 57, 62, 63, 65, 81, 161, 182, 183, 68 Stat. 930, 932, 933, 935, 948, 953, 954, as amended (42 U.S.C. 2073, 2077, 2092, 2093, 2095, 2111, 2201, 2232, 2233); secs. 202, 206, 88 Stat. 1244, 1246 (42 U.S.C. 5842, 5846); secs. 10 and 14, Pub. L. 95–601, 92 Stat. 2951 (42 U.S.C. 2021a and 5851) and Pub. L. 102–486, sec 2902, 106 Stat. 3123, (42 U.S.C. 5851).

19. In § 61.1, paragraph (c) is revised to read as follows:

§ 61.1 Purpose and scope.

* * * * *

(c) This part also gives notice to all persons who knowingly provide to any licensee, applicant, contractor, or subcontractor, components, equipment, materials, or other goods or services, that relate to a licensee's or applicant's activities subject to this part, that they may be individually subject to NRC enforcement action for violation of § 61.9b.

20. Section 61.9b is revised to read as follows:

§ 61.9b Deliberate misconduct.

(a) Any licensee, applicant for a license, employee of a licensee or applicant; or any contractor (including a supplier or consultant), subcontractor, employee of a contractor or subcontractor of any licensee or applicant for a license, who knowingly provides to any licensee, applicant, contractor, or subcontractor, any components, equipment, materials, or other goods or services that relate to a licensee's or applicant's activities in this part, may not:

(1) Engage in deliberate misconduct that causes or would have caused, if not detected, a licensee or applicant to be in violation of any rule, regulation, or order; or any term, condition, or limitation of any license issued by the Commission; or

(2) Deliberately submit to the NRC, a licensee, an applicant, or a licensee's or applicant's contractor or subcontractor, information that the person submitting the information knows to be incomplete or inaccurate in some respect material to the NRC.

(b) A person who violates paragraph (a)(1) or (a)(2) of this section may be subject to enforcement action in accordance with the procedures in 10 CFR part 2, subpart B.

(c) For the purposes of paragraph (a)(1) of this section, deliberate misconduct by a person means an intentional act or omission that the person knows:

(1) Would cause a licensee or applicant to be in violation of any rule, regulation, or order; or any term, condition, or limitation, of any license issued by the Commission; or

(2) Constitutes a violation of a requirement, procedure, instruction, contract, purchase order, or policy of a licensee, applicant, contractor, or subcontractor.

PART 70—DOMESTIC LICENSING OF SPECIAL NUCLEAR MATERIAL

21. The authority citation for Part 70 continues to read as follows:

Authority: Secs. 51, 53, 161, 182, 183, 68 Stat. 929, 930, 948, 953, 954, as amended, sec. 234, 83 Stat. 444, as amended, sec. 1701, 106 Stat. 2951, 2952, 2953 (42 U.S.C. 2071, 2073, 2201, 2232, 2233, 2282, 2297f); secs. 201, as amended, 202, 204, 206, 88 Stat. 1242, as amended, 1244, 1245, 1246 (42 U.S.C. 5841, 5842, 5845, 5846).

Sections 70.1(c) and 70.20a(b) also issued under secs. 135, 141, Pub. L. 97–425, 96 Stat. 2232, 2241 (42 U.S.C. 10155, 10161). Section 70.7 also issued under Pub. L. 95–601, sec. 10, 92 Stat. 2951 (42 U.S.C. 5851). Section 70.21(g) also issued under sec. 122, 68 Stat. 939 (42 U.S.C. 2152). Section 70.31 also issued under sec. 57d, Pub. L. 93–377, 88 Stat. 475 (42 U.S.C. 2077). Sections 70.36 and 70.44 also issued under sec. 184, 68 Stat. 954, as amended (42 U.S.C. 2234). Section 70.61 also issued under secs. 186, 187, 68 Stat. 955 (42 U.S.C. 2236, 2237). Section 70.62 also issued under sec. 108, 68 Stat. 939, as amended (42 U.S.C. 2138).

22. Section 70.2 is revised to read as follows:

§ 70.2 Scope.

Except as provided in §§ 70.11 to 70.13, inclusive, the regulations in this part apply to all persons in the United States. This part also gives notice to all persons who knowingly provide to any licensee, applicant, contractor, or subcontractor, components, equipment, materials, or other goods or services, that relate to a licensee's or applicant's activities subject to this part, that they may be individually subject to NRC enforcement action for violation of § 70.10.

23. Section 70.10 is revised to read as follows:

§ 70.10 Deliberate misconduct.

(a) Any licensee, applicant for a license, employee of a licensee or applicant; or any contractor (including a supplier or consultant), subcontractor, employee of a contractor or subcontractor of any licensee or applicant for a license, who knowingly provides to any licensee, applicant, contractor, or subcontractor, any components, equipment, materials, or other goods or services that relate to a licensee's or applicant's activities in this part, may not:

(1) Engage in deliberate misconduct that causes or would have caused, if not detected, a licensee or applicant to be in violation of any rule, regulation, or order; or any term, condition, or limitation of any license issued by the Commission; or

(2) Deliberately submit to the NRC, a licensee, an applicant, or a licensee's or applicant's contractor or subcontractor, information that the person submitting the information knows to be incomplete or inaccurate in some respect material to the NRC.

(b) A person who violates paragraph (a)(1) or (a)(2) of this section may be subject to enforcement action in accordance with the procedures in 10 CFR part 2, subpart B.

(c) For the purposes of paragraph (a)(1) of this section, deliberate misconduct by a person means an intentional act or omission that the person knows:

(1) Would cause a licensee or applicant to be in violation of any rule, regulation, or order; or any term, condition, or limitation, of any license issued by the Commission; or

(2) Constitutes a violation of a requirement, procedure, instruction, contract, purchase order, or policy of a licensee, applicant, contractor, or subcontractor.

PART 71—PACKAGING AND TRANSPORTATION OF RADIOACTIVE MATERIAL

24. The authority citation for Part 71 continues to read as follows:

Authority: Secs. 53, 57, 62, 63, 81, 161, 182, 183, 68 Stat. 930, 932, 933, 935, 948,

953, 954, as amended, sec. 1701, 106 Stat. 2951, 2952, 2953 (42 U.S.C. 2073, 2077, 2092, 2093, 2111, 2201, 2232, 2233, 2297f); secs. 201, as amended, 202, 206, 88 Stat. 1242, as amended, 1244, 1246 (42 U.S.C. 5841, 5842, 5846).

Section 71.97 also issued under sec. 301, Pub. L. 96–295, 94 Stat. 789–790.

25. Section 71.0 is amended by adding a new paragraph (f) to read as follows:

§ 71.0 Purpose and scope.

* * * * *

(f) This part also gives notice to all persons who knowingly provide to any licensee, certificate holder, quality assurance program approval holder, applicant for a license, certificate, or quality assurance program approval or to a contractor, or subcontractor of any of them, components, equipment, materials, or other goods or services, that relate to a licensee's, certificate holder's, or applicant's activities subject to this part, that they may be individually subject to NRC enforcement action for violation of § 71.11.

26. Section 71.11 is added to read as follows:

§ 71.11 Deliberate misconduct.

(a) This section applies to any—

(1) Licensee;

(2) Certificate holder;

(3) Quality assurance program approval holder;

(4) Applicant for a license, certificate, or quality assurance program approval;

(5) Contractor (including a supplier or consultant) or subcontractor, to any person identified in paragraphs (a)(1) through (a)(4) of this section; or

(6) Employee of any person identified in paragraphs (a)(1) through (a)(5) of this section.

(b) A person identified in paragraph (a) of this section who knowingly provides to any entity, listed in paragraphs (a)(1) through (a)(5) of this section, any components, materials, or other goods or services that relate to a licensee's, certificate holder's, quality assurance program approval holder's or applicant's activities subject to this part may not:

(1) Engage in deliberate misconduct that causes or would have caused, if not detected, a licensee, certificate holder, quality assurance program approval holder, or any applicant to be in violation of any rule, regulation, or order; or any term, condition, or limitation of any license, certificate or approval issued by the Commission; or

(2) Deliberately submit to the NRC, a licensee, a certificate holder, quality assurance program approval holder, an applicant for a license certificate or quality assurance program approval, or a licensee's, applicant's, certificate holder's or quality assurance program approval holder's contractor or subcontractor, information that the person submitting the information knows to be incomplete or inaccurate in some respect material to the NRC.

(c) A person who violates paragraph (b)(1) or (b)(2) of this section may be subject to enforcement action in accordance with the procedures in 10 CFR part 2, subpart B.

(d) For the purposes of paragraph (b)(1) of this section, deliberate misconduct by a person means an intentional act or omission that the person knows:

(1) Would cause a licensee, certificate holder, quality assurance program approval holder or applicant for a license, certificate, or quality assurance program approval to be in violation of any rule, regulation, or order; or any term, condition, or limitation, of any license or certificate issued by the Commission; or

(2) Constitutes a violation of a requirement, procedure, instruction, contract, purchase order, or policy of a licensee, applicant, contractor, or subcontractor.

PART 72—LICENSING REQUIREMENTS FOR THE INDEPENDENT STORAGE OF SPENT NUCLEAR FUEL AND HIGH-LEVEL RADIOACTIVE WASTE

27. The authority citation for Part 72 continues to read as follows:

Authority: Secs. 51, 53, 57, 62, 63, 65, 69, 81, 161, 182, 183, 184, 186, 187, 189, 68 Stat. 929, 930, 932, 933, 934, 935, 948, 953, 954, 955, as amended, sec. 234, 83 Stat. 444, as amended (42 U.S.C. 2071, 2073, 2077, 2092, 2093, 2095, 2099, 2111, 2201, 2232, 2233, 2234, 2236, 2237, 2238, 2282); sec. 274, Pub. L. 86–373, 73 Stat. 688, as amended (42 U.S.C. 2021); sec. 201, as amended, 202, 206, 88 Stat. 1242, as amended, 1244, 1246 (42 U.S.C. 5841, 5842, 5846); Pub. L. 95–601, sec. 10, 92 Stat. 2951 (42 U.S.C. 5851); sec. 102, Pub. L. 91–190, 83 Stat. 853 (42 U.S.C. 4332); Secs. 131, 132, 133, 135, 137, 141, Pub. L. 97–425, 96 Stat. 2229, 2230, 2232, 2241, sec. 148, Pub. L. 100–203, 101 Stat. 1330–235 (42 U.S.C. 10151, 10152, 10153, 10155, 10157, 10161, 10168).

Section 72.44(g) also issued under secs. 142(b) and 148(c), (d), Pub. L. 100–203, 101 Stat. 1330–232, 1330–236 (42 U.S.C. 10162(b), 10168(c), (d)). Section 72.46 also issued under sec. 189, 68 Stat. 955 (42 U.S.C. 2239); sec. 134, Pub. L. 97–425, 96 Stat. 2230 (42 U.S.C. 10154). Section 72.96(d) also issued under sec. 145(g), Pub. L. 100–203, 101 Stat. 1330–235 (42 U.S.C. 10165(g)). Subpart J also issued under secs. 2(2), 2(15), 2(19), 117(a), 141(h), Pub. L. 97–425, 96 Stat. 2202, 2203, 2204, 2222, 2224 (42 U.S.C. 10101, 10137(a), 10161(h)). Subparts K and L are also issued under sec. 133, 98 Stat. 2230 (42 U.S.C. 10153) and sec. 218(a), 96 Stat. 2252 (42 U.S.C. 10198).

28. Section 72.2 is amended by adding a new paragraph (f) to read as follows:

§ 72.2 Scope.

* * * * *

(f) This part also gives notice to all persons who knowingly provide to any licensee, certificate holder, applicant for a license or certificate, contractor, or subcontractor, components, equipment, materials, or other goods or services, that relate to a licensee's, certificate holder's, or applicant's activities subject to this part, that they may be individually subject to NRC enforcement action for violation of § 72.12.

29. Section 72.12 is revised to read as follows:

§ 72.12 Deliberate misconduct.

(a) Any licensee, certificate holder, applicant for a license or certificate, employee of a licensee, certificate holder, or applicant for a license or certificate; or any contractor (including a supplier or consultant) or subcontractor, employee of a contractor or subcontractor of any licensee, certificate holder, or applicant for a license or certificate who knowingly provides to any licensee, certificate holder, applicant for a license or certificate, contractor, or subcontractor, any components, materials, or other goods or services that relate to a licensee's, certificate holder's, or applicant's activities subject to this part, may not:

(1) Engage in deliberate misconduct that causes or would have caused, if not detected, a licensee, certificate holder or applicant to be in violation of any rule, regulation, or order; or any term, condition, or limitation of any license or certificate issued by the Commission; or

(2) Deliberately submit to the NRC, a licensee, a certificate holder, an applicant for a license or certificate, or a licensee's, applicant's, or certificate holder's contractor or subcontractor, information that the person submitting the information knows to be incomplete or inaccurate in some respect material to the NRC.

(b) A person who violates paragraph (a)(1) or (a)(2) of this section may be subject to enforcement action in accordance with the procedures in 10 CFR part 2, subpart B.

(c) For the purposes of paragraph (a)(1) of this section, deliberate misconduct by a person means an

intentional act or omission that the person knows:

(1) Would cause a licensee, certificate holder or applicant for a license or certificate to be in violation of any rule, regulation, or order; or any term, condition, or limitation, of any license or certificate issued by the Commission; or

(2) Constitutes a violation of a requirement, procedure, instruction, contract, purchase order, or policy of a licensee, applicant, contractor, or subcontractor.

PART 110—EXPORT AND IMPORT OF NUCLEAR EQUIPMENT AND MATERIAL

30. The authority citation for Part 110 continues to read as follows:

Authority: Secs. 51, 53, 54, 57, 63, 64, 65, 81, 82, 103, 104, 109, 111, 126, 127, 128, 129, 161, 181, 182, 183, 187, 189, 68 Stat. 929, 930, 931, 932, 933, 936, 937, 948, 953, 954, 955, 956, as amended (42 U.S.C. 2071, 2073, 2074, 2077, 2092–2095, 2111, 2112, 2133, 2134, 2139, 2139a, 2141, 2154–2158, 2201, 2231–2233, 2237, 2239); sec. 201, 88 Stat. 1242, as amended (42 U.S.C. 5841; sec 5, Pub. L. 101–575, 104 Stat 2835 (42 U.S.C. 2243).

Sections 110.1(b)(2) and 110.1(b)(3) also issued under Pub. L. 96–92, 93 Stat. 710 (22 U.S.C. 2403). Section 110.11 also issued under sec. 122, 68 Stat. 939 (42 U.S.C. 2152) and secs. 54c and 57d., 88 Stat. 473, 475 (42 U.S.C. 2074). Section 110.27 also issued under sec. 309(a), Pub. L. 99–440. Section 110.50(b)(3) also issued under sec. 123, 92 Stat. 142 (42 U.S.C. 2153). Section 110.51 also issued under sec. 184, 68 Stat. 954, as amended (42 U.S.C. 2234). Section 110.52 also issued under sec. 186, 68 Stat. 955 (42 U.S.C. 2236). Sections 110.80–110.113 also issued under 5 U.S.C. 552, 554. Sections 110.130–110.135 also issued under 5 U.S.C. 553. Sections 110.2 and 110.42 (a)(9) also issued under sec. 903, Pub. L. 102–496 (42 U.S.C. 2151 et seq.).

31. Section 110.1 is revised to read as follows:

§ 110.1 Purpose and scope.

(a) The regulations in this part prescribe licensing, enforcement, and rulemaking procedures and criteria, under the Atomic Energy Act, for the export of nuclear equipment and material, as set out in §§ 110.8 and 110.9, and the import of nuclear equipment and material, as set out in § 110.9a. This part also gives notice to all persons who knowingly provide to any licensee, applicant, contractor, or subcontractor, components, equipment, materials, or other goods or services, that relate to a licensee's or applicant's activities subject to this part, that they may be individually subject to NRC enforcement action for violation of § 110.7b.

32. Section 110.7b is revised to read as follows:

§ 110.7b Deliberate misconduct.

(a) Any licensee, applicant for a license, employee of a licensee or applicant; or any contractor (including a supplier or consultant), subcontractor, employee of a contractor or subcontractor of any licensee or applicant for a license, who knowingly provides to any licensee, applicant, contractor, or subcontractor, any components, equipment, materials, or other goods or services that relate to a licensee's or applicant's activities in this part, may not:

(1) Engage in deliberate misconduct that causes or would have caused, if not detected, a licensee or applicant to be in violation of any rule, regulation, or order; or any term, condition, or limitation of any license issued by the Commission; or

(2) Deliberately submit to the NRC, a licensee, an applicant, or a licensee's or applicant's contractor or subcontractor, information that the person submitting the information knows to be incomplete or inaccurate in some respect material to the NRC.

(b) A person who violates paragraph (a)(1) or (a)(2) of this section may be subject to enforcement action in accordance with the procedures in 10 CFR part 2, subpart B.

(c) For the purposes of paragraph (a)(1) of this section, deliberate misconduct by a person means an intentional act or omission that the person knows:

(1) Would cause a licensee or applicant to be in violation of any rule, regulation, or order; or any term, condition, or limitation, of any license issued by the Commission; or

(2) Constitutes a violation of a requirement, procedure, instruction, contract, purchase order, or policy of a licensee, applicant, contractor, or subcontractor.

PART 150—EXEMPTIONS AND CONTINUED REGULATORY AUTHORITY IN AGREEMENT STATES AND IN OFFSHORE WATERS UNDER SECTION 274

33. The authority citation for Part 150 continues to read as follows:

Authority: Sec. 161, 68 Stat. 948, as amended, sec. 274, 73 Stat. 688 (42 U.S.C. 2201, 2021); sec. 201, 88 Stat. 1242, as amended (42 U.S.C. 5841).

Sections 150.3, 150.15, 150.15a, 150.31, 150.32 also issued under secs. 11e(2), 81, 68 Stat. 923, 935, as amended, secs. 83, 84, 92 Stat. 3033, 3039 (42 U.S.C. 2014e(2), 2111, 2113, 2114). Section 150.14 also issued under sec. 53, 68 Stat. 930, as amended (42 U.S.C. 2073). Section 150.15 also issued under secs. 135, 141, Pub.L. 97–425, 96 Stat. 2232, 2241 (42 U.S.C. 10155, 10161). Section 150.17a also issued under sec. 122, 68 Stat. 939 (42 U.S.C. 2152). Section 150.30 also issued under sec. 234, 83 Stat. 444 (42 U.S.C. 2282).

34. Section 150.2 is revised to read as follows:

§ 150.2 Scope.

The regulations in this part apply to all States that have entered into agreements with the Commission or the Atomic Energy Commission pursuant to subsection 274b of the Act. This part also gives notice to all persons who knowingly provide to any licensee, applicant for a license or certificate or quality assurance program approval, holder of a certificate or quality assurance program approval, contractor, or subcontractor, any components, equipment, materials, or other goods or services that relate to a licensee's, certificate holder's, quality assurance program approval holder's or applicant's activities subject to this part, that they may be individually subject to NRC enforcement action for violation of §§ 30.10, 40.10, 70.10 and 71.11.

Dated at Rockville, Maryland, this 30th day of September, 1996.

For the Nuclear Regulatory Commission.

William M. Hill,

Acting Secretary of the Commission.

[FR Doc. 96–25494 Filed 10–3–96; 8:45 am]

BILLING CODE 7590–01–P

DEPARTMENT OF TRANSPORTATION

Federal Aviation Administration

14 CFR Chapter I

[Summary Notice No. PR–96–5]

Petition for Rulemaking; Summary of Petitions Received; Dispositions of Petitions Issued

AGENCY: Federal Aviation Administration (FAA), DOT.

ACTION: Notice of petitions for rulemaking received and of dispositions of prior petitions.

SUMMARY: Pursuant to FAA's rulemaking provisions governing the application, processing, and disposition of petitions for rulemaking (14 CFR Part 11), this notice contains a summary of certain petitions requesting the initiation of rulemaking procedures for the amendment of specified provisions of the Federal Aviation Regulations and of denials or withdrawals of certain petitions previously received. The purpose of this notice is to improve the public's awareness of, and participation

in, this aspect of FAA's regulatory activities. Neither publication of this notice nor the inclusion or omission of information in the summary is intended to affect the legal status of any petition or its final disposition.

DATES: Comments on petitions received must identify the petition docket number involved and must be received by December 2, 1996.

ADDRESSES: Send comments on any petition in triplicate to: Federal Aviation Administration, Office of the Chief Counsel, Attn: Rules Docket No. 28641, Washington, D.C. 20591.

The petition, any comments received, and a copy of any final disposition are filed in the assigned regulatory docket and are available for examination in the Rules Docket (AGC–200), Room 915G, FAA Headquarters Building (FOB 10A), 800 Independence Ave., SW., Washington, D.C. 20591; telephone (202) 267–3132. Comments may also be sent electronically to the following internet address: nprmcmts@mail.hq.faa.gov.

FOR FURTHER INFORMATION CONTACT: Fred Haynes, (202) 267–3939, or Marisa Mullen, (202) 267–9681, Office of Rulemaking (ARM–1), Federal Aviation Administration, 800 Independence Avenue, SW, Washington, DC 20591.

This notice is published pursuant to paragraphs (b) and (f) of § 11.27 of part 11 of the Federal Aviation Regulations (14 CFR Part 11).

Issued in Washington, D.C. on September 30, 1996.

Joseph A. Conte,

Acting Assistant Chief Counsel for Regulations.

Petitions for Rulemaking

Docket No.: 28641.

Petitioner: Air Transportation Association of America (ATA).

Regulations Affected: 14 CFR 121.417.

Description of Rulechange Sought: To revise initial and recurrent emergency training requirements of flightcrew members and flight attendants and separate flightcrew member and flight attendant emergency training regulations into two distinct regulations.:

The petitioner feels that such change would promote safety by increasing flight attendant emergency preparedness through increased current hands-on emergency equipment training and by making more training time available for pilots in areas deemed important by FAA, NTSB, and airlines.

[FR Doc. 96–25416 Filed 10–3–96; 8:45 am]

BILLING CODE 4910–13–M

14 CFR Chapter I

[Summary Notice No. PR–96–6]

Petition for Rulemaking; Summary of Petitions Received; Dispositions of Petitions Issued

AGENCY: Federal Aviation Administration (FAA), DOT.

ACTION: Notice of petitions for rulemaking received and of dispositions of prior petitions.

SUMMARY: Pursuant to FAA's rulemaking provisions governing the application, processing, and disposition of petitions for rulemaking (14 CFR Part 11), this notice contains a summary of certain petitions requesting the initiation of rulemaking procedures for the amendment of specified provisions of the Federal Aviation Regulations and of denials or withdrawals of certain petitions previously received. The purpose of this notice is to improve the public's awareness of, and participation in, this aspect of FAA's regulatory activities. Neither publication of this notice nor the inclusion or omission of information in the summary is intended to affect the legal status of any petition or its final disposition.

DATES: Comments on petitions received must identify the petition docket number involved and must be received by December 3, 1996.

ADDRESSES: Send comments on any petition in triplicate to: Federal Aviation Administration, Office of the Chief Counsel, Attn: Rules Docket No. 28631, 800 Independence Avenue, SW., Washington, DC 20591.

The petition, any comments received, and a copy of any final disposition are filed in the assigned regulatory docket and are available for examination in the Rules Docket (AGC–200), Room 915G, FAA Headquarters Building (FOB 10A), 800 Independence Ave., SW., Washington, DC 20591; telephone (202) 267–3132. Comments may also be sent electronically to the following internet address: nprmcmts@mail.hq.faa.gov.

FOR FURTHER INFORMATION CONTACT:

Fred Haynes, (202) 267–3939, or Marisa Mullen, (202) 267–9681, Office of Rulemaking (ARM–1), Federal Aviation Administration, 800 Independence Avenue, SW., Washington, DC 20591.

This notice is published pursuant to paragraphs (b) and (f) of § 11.27 of Part 11 of the Federal Aviation Regulations (14 CFR Part 11).

Issued in Washington, DC, on October 3, 1996.

Donald P. Byrne,

Assistant Chief Counsel for Regulations.

Petitions for Rulemaking

Docket No.: 28631.

Petitioner: Samuel J. Burris.

Regulations Affected: 14 CFR 121.575.

Description of Rulechange Sought: To prohibit U.S. air carriers from serving, and passengers from consuming, alcoholic beverages on all foreign and domestic flights.

The petitioner feels that such change would enhance safety for passengers in the plane and people on the ground because the prohibition would reduce the number of incidents of offensive and criminal acts associated with the consumption of alcohol during flights.

[FR Doc. 96–25544 Filed 10–3–96; 8:45 am]

BILLING CODE 4910–13–M

14 CFR Part 39

[Docket No. 95–NM–199–AD]

RIN 2120–AA64

Airworthiness Directives; McDonnell Douglas Model DC–10 Series Airplanes and KC–10A (Military) Airplanes

AGENCY: Federal Aviation Administration, DOT.

ACTION: Supplemental notice of proposed rulemaking; reopening of comment period.

SUMMARY: This document revises an earlier proposed airworthiness directive (AD), applicable to certain McDonnell Douglas Model DC–10 series airplanes, and KC–10A (military) airplanes, that would have required high frequency eddy current inspection(s) to detect cracks in the secondary pivot support of the horizontal stabilizer, and various follow-on actions, if necessary. That proposal was prompted by reports of crack development in the secondary pivot support of the horizontal stabilizer due to fatigue. This action revises the proposed rule by adding repetitive visual inspections. The actions specified by this proposed AD are intended to prevent such fatigue cracking, which could result in reduced structural integrity of the horizontal stabilizer and, subsequently, lead to reduced controllability of the airplane.

DATES: Comments must be received by October 30, 1996.

ADDRESSES: Submit comments in triplicate to the Federal Aviation Administration (FAA), Transport Airplane Directorate, ANM–103,

Attention: Rules Docket No. 95–NM–199–AD, 1601 Lind Avenue, SW., Renton, Washington 98055–4056. Comments may be inspected at this location between 9:00 a.m. and 3:00 p.m., Monday through Friday, except Federal holidays.

The service information referenced in the proposed rule may be obtained from McDonnell Douglas Corporation, 3855 Lakewood Boulevard, Long Beach, California 90846, Attention: Technical Publications Business Administration, Department C1–L51 (2–60). This information may be examined at the FAA, Transport Airplane Directorate, 1601 Lind Avenue, SW., Renton, Washington; or at the FAA, Los Angeles Aircraft Certification Office, Transport Airplane Directorate, 3960 Paramount Boulevard, Lakewood, California.

FOR FURTHER INFORMATION CONTACT: Ron Atmur, Aerospace Engineer, Airframe Branch, ANM–120L, FAA, Los Angeles Aircraft Certification Office, 3960 Paramount Boulevard, Lakewood, California 90712; telephone (310) 627–5224; fax (310) 627–5210.

SUPPLEMENTARY INFORMATION:

Comments Invited

Interested persons are invited to participate in the making of the proposed rule by submitting such written data, views, or arguments as they may desire. Communications shall identify the Rules Docket number and be submitted in triplicate to the address specified above. All communications received on or before the closing date for comments, specified above, will be considered before taking action on the proposed rule. The proposals contained in this notice may be changed in light of the comments received.

Comments are specifically invited on the overall regulatory, economic, environmental, and energy aspects of the proposed rule. All comments submitted will be available, both before and after the closing date for comments, in the Rules Docket for examination by interested persons. A report summarizing each FAA-public contact concerned with the substance of this proposal will be filed in the Rules Docket.

Commenters wishing the FAA to acknowledge receipt of their comments submitted in response to this notice must submit a self-addressed, stamped postcard on which the following statement is made: ''Comments to Docket Number 95–NM–199–AD.'' The postcard will be date stamped and returned to the commenter.

Availability of NPRMs

Any person may obtain a copy of this NPRM by submitting a request to the FAA, Transport Airplane Directorate, ANM–103, Attention: Rules Docket No. 95–NM–199–AD, 1601 Lind Avenue, SW., Renton, Washington 98055–4056.

Discussion

A proposal to amend part 39 of the Federal Aviation Regulations (14 CFR part 39) to add an airworthiness directive (AD), applicable to certain McDonnell Douglas Model DC–10 series airplanes, and KC–10A (military) airplanes, was published as a notice of proposed rulemaking (NPRM) in the Federal Register on March 22, 1996 (61 FR 11789). That NPRM would have required high frequency eddy current (HFEC) inspections to detect cracks in the secondary pivot support of the horizontal stabilizer. The proposed AD also would have required repair of the cracked area and follow-on actions, or replacement of the cracked secondary pivot support of the horizontal stabilizer with a new secondary pivot support. Such replacement would have constituted terminating action for the repetitive inspections. That NPRM was prompted by crack development in the secondary pivot support of the horizontal stabilizer due to fatigue. That condition, if not corrected, could result in reduced structural integrity of the horizontal stabilizer; this situation subsequently could lead to reduced controllability of the airplane.

Actions Since Issuance of Previous Proposal

Since the issuance of that NPRM, the FAA has recognized that the repetitive intervals for accomplishing the visual inspections that would be required by paragraph (c)(1) of the NPRM were inadvertently omitted. These visual inspections are an optional procedure that is to be accomplished if any crack is detected during an HFEC inspection, and the cracking is repaired in accordance with the ''temporary repair'' procedures described in Paragraph (1) of Condition II (cracks), Option 1 (temporary repair), of McDonnell Douglas DC–10 Service Bulletin 53–167, Revision 1. The FAA has determined that the proposed rule must be revised to require visual inspections of the subject area at intervals of 300 landings in order to ensure that fatigue cracking is addressed in an adequate and timely manner.

Conclusion

Since this change expands the scope of the originally proposed rule, the FAA has determined that it is necessary to reopen the comment period to provide additional opportunity for public comment.

Cost Impact

There are approximately 376 McDonnell Douglas Model DC–10 series airplanes and KC–10A (military) airplanes of the affected design in the worldwide fleet. The FAA estimates that 230 airplanes of U.S. registry would be affected by this proposed AD, that it would take approximately 5 work hours per airplane to accomplish the proposed actions, and that the average labor rate is $60 per work hour. Based on these figures, the cost impact of the proposed AD on U.S. operators is estimated to be $69,000, or $300 per airplane, per inspection cycle.

The cost impact figure discussed above is based on assumptions that no operator has yet accomplished any of the proposed requirements of this AD action, and that no operator would accomplish those actions in the future if this AD were not adopted.

Regulatory Impact

The regulations proposed herein would not have substantial direct effects on the States, on the relationship between the national government and the States, or on the distribution of power and responsibilities among the various levels of government. Therefore, in accordance with Executive Order 12612, it is determined that this proposal would not have sufficient federalism implications to warrant the preparation of a Federalism Assessment.

For the reasons discussed above, I certify that this proposed regulation (1) is not a ''significant regulatory action'' under Executive Order 12866; (2) is not a ''significant rule'' under the DOT Regulatory Policies and Procedures (44 FR 11034, February 26, 1979); and (3) if promulgated, will not have a significant economic impact, positive or negative, on a substantial number of small entities under the criteria of the Regulatory Flexibility Act. A copy of the draft regulatory evaluation prepared for this action is contained in the Rules Docket. A copy of it may be obtained by contacting the Rules Docket at the location provided under the caption ''ADDRESSES.''

List of Subjects in 14 CFR Part 39

Air transportation, Aircraft, Aviation safety, Safety.

The Proposed Amendment

Accordingly, pursuant to the authority delegated to me by the Administrator, the Federal Aviation Administration proposes to amend part

39 of the Federal Aviation Regulations (14 CFR part 39) as follows:

PART 39—AIRWORTHINESS DIRECTIVES

1. The authority citation for part 39 continues to read as follows:

Authority: 49 U.S.C. 106(g), 40113, 44701.

§ 39.13 [Amended]

2. Section 39.13 is amended by adding the following new airworthiness directive:

McDonnell Douglas: Docket 95–NM–199–AD.

Applicability: Model DC–10–10, -15, -30, and -40 series airplanes, and KC–10A (military) airplanes; as listed in McDonnell Douglas DC–10 Service Bulletin 53–167, Revision 1, dated February 15, 1995; certificated in any category.

Note 1: This AD applies to each airplane identified in the preceding applicability provision, regardless of whether it has been otherwise modified, altered, or repaired in the area subject to the requirements of this AD. For airplanes that have been modified, altered, or repaired so that the performance of the requirements of this AD is affected, the owner/operator must request approval for an alternative method of compliance in accordance with paragraph (d) of this AD. The request should include an assessment of the effect of the modification, alteration, or repair on the unsafe condition addressed by this AD; and, if the unsafe condition has not been eliminated, the request should include specific proposed actions to address it.

Compliance: Required as indicated, unless accomplished previously.

To prevent fatigue cracking in the secondary pivot support of the horizontal stabilizer, which could result in reduced structural integrity of the horizontal stabilizer and, subsequently, lead to reduced controllability of the airplane, accomplish the following:

(a) Prior to the accumulation of 10,000 total landings, or within 3,000 landings after the effective date of this AD, whichever occurs later, perform a high frequency eddy current (HFEC) inspection to detect cracks in the secondary pivot support of the horizontal stabilizer, in accordance with McDonnell Douglas DC–10 Service Bulletin 53–167, Revision 1, dated February 15, 1995.

(b) If no cracks are detected during the HFEC inspection required by paragraph (a) of this AD, perform the actions specified in paragraph (b)(1) of this AD until the actions specified in paragraph (b)(2) of this AD are accomplished. These actions shall be accomplished in accordance with McDonnell Douglas DC–10 Service Bulletin 53–167, Revision 1, dated February 15, 1995.

(1) Repeat the HFEC inspection thereafter at intervals not to exceed 10,000 landings.

(2) Accomplishment of the preventative modification in accordance with Condition I (no cracks), Option 2, of the service bulletin constitutes terminating action for the repetitive inspection requirements of paragraph (b)(1) of this AD.

(c) If any crack is detected during the HFEC inspection required by paragraph (a) or (b) of this AD, prior to further flight, accomplish either paragraph (c)(1) or (c)(2) of this AD in accordance with McDonnell Douglas DC–10 Service Bulletin 53–167, Revision 1, dated February 15, 1995.

(1) Repair the crack in accordance with Paragraph (1) of Condition II (cracks), Option 1 (temporary repair), of the Accomplishment Instructions of the service bulletin. Within 300 landings after accomplishing that repair, perform a visual inspection to detect cracks at the area of the repair, in accordance with the service bulletin. Repeat the visual inspection thereafter at intervals not to exceed 300 landings.

(i) If any crack is detected during the visual inspection required by paragraph (c)(1) of this AD, prior to further flight, repair it in accordance with a method approved by the Manager, Los Angeles Aircraft Certification Office (ACO), FAA, Transport Airplane Directorate.

(ii) Prior to 2,800 landings after accomplishing the HFEC inspection required by paragraph (a) of this AD, replace the secondary pivot support of the horizontal stabilizer with a new secondary pivot support, in accordance with Condition II (cracks), Option 2, of the service bulletin. Accomplishment of this replacement constitutes terminating action for the repetitive HFEC and visual inspection requirements of this AD.

(2) Replace the secondary pivot support of the horizontal stabilizer with a new secondary pivot support, in accordance with Condition II (cracks), Option 2 (permanent repair), of the service bulletin. Accomplishment of this replacement constitutes terminating action for the repetitive HFEC and visual inspection requirements of this AD.

(d) An alternative method of compliance or adjustment of the compliance time that provides an acceptable level of safety may be used if approved by the Manager, Los Angeles Aircraft Certification Office (ACO), FAA, Transport Airplane Directorate. Operators shall submit their requests through an appropriate FAA Principal Maintenance Inspector, who may add comments and then send it to the Manager, Los Angeles ACO.

Note 2: Information concerning the existence of approved alternative methods of compliance with this AD, if any, may be obtained from the Los Angeles ACO.

(e) Special flight permits may be issued in accordance with sections 21.197 and 21.199 of the Federal Aviation Regulations (14 CFR 21.197 and 21.199) to operate the airplane to a location where the requirements of this AD can be accomplished.

Issued in Renton, Washington, on September 27, 1996.

James V. Devany,

Acting Manager, Transport Airplane Directorate, Aircraft Certification Service.

[FR Doc. 96–25460 Filed 10–3–96; 8:45 am]

BILLING CODE 4910–13–U

14 CFR Part 39

[Docket No. 96–ANE–33]

RIN 2120–AA64

Airworthiness Directives; Pratt & Whitney JT8D–200 Series Turbofan Engines

AGENCY: Federal Aviation Administration, DOT.

ACTION: Notice of proposed rulemaking (NPRM).

SUMMARY: This document proposes the adoption of a new airworthiness directive (AD) that is applicable to Pratt & Whitney JT8D–200 series turbofan engines. This proposal would require, for front compressor front hubs (fan hubs), cleaning; initial and repetitive eddy current (ECI) and fluorescent penetrant inspections (FPI) of tierod and counterweight holes for cracks; removal of bushings; the cleaning and ECI and FPI of bushed holes for cracks; and, if necessary, replacement with serviceable parts. In addition, this proposal would require reporting findings of cracked fan hubs. This proposal is prompted by a report of an uncontained failure of a fan hub. The actions specified by the proposed AD are intended to prevent fan hub failure due to tierod, counterweight, or bushed hole cracking, which could result in an uncontained engine failure and damage to the aircraft.

DATES: Comments must be received by November 4, 1996.

ADDRESSES: Submit comments in triplicate to the Federal Aviation Administration (FAA), New England Region, Office of the Assistant Chief Counsel, Attention: Rules Docket No. 96–ANE–33, 12 New England Executive Park, Burlington, MA 01803–5299. Comments may be inspected at this location between 8:00 a.m. and 4:30 p.m., Monday through Friday, except Federal holidays.

The service information referenced in the proposed rule may be obtained from Pratt & Whitney, 400 Main St., East Hartford, CT 06108; telephone (860) 565–6600, fax (860) 565–4503. This information may be examined at the FAA, New England Region, Office of the Assistant Chief Counsel, 12 New England Executive Park, Burlington, MA.

FOR FURTHER INFORMATION CONTACT: Robert E. Guyotte, Manager, Engine Certification Branch, Engine Certification Office, FAA, Engine and Propeller Directorate, 12 New England Executive Park, Burlington, MA 01803–5299; telephone (617) 238–7142, fax (617) 238–7199.

SUPPLEMENTARY INFORMATION:

Comments Invited

Interested persons are invited to participate in the making of the proposed rule by submitting such written data, views, or arguments as they may desire. Communications should identify the Rules Docket number and be submitted in triplicate to the address specified above. All communications received on or before the closing date for comments, specified above, will be considered before taking action on the proposed rule. The proposals contained in this notice may be changed in light of the comments received.

Comments are specifically invited on the overall regulatory, economic, environmental, and energy aspects of the proposed rule. All comments submitted will be available, both before and after the closing date for comments, in the Rules Docket for examination by interested persons. A report summarizing each FAA-public contact concerned with the substance of this proposal will be filed in the Rules Docket.

Commenters wishing the FAA to acknowledge receipt of their comments submitted in response to this notice must submit a self-addressed, stamped postcard on which the following statement is made: ''Comments to Docket Number 96–ANE–33.'' The postcard will be date stamped and returned to the commenter.

Availability of NPRMs

Any person may obtain a copy of this NPRM by submitting a request to the FAA, New England Region, Office of the Assistant Chief Counsel, Attention: Rules Docket No. 96–ANE–33, 12 New England Executive Park, Burlington, MA 01803–5299.

Discussion

The Federal Aviation Administration (FAA) received a report of an uncontained failure of a front compressor front hub (fan hub), Part Number 5000501–01, installed on a Pratt & Whitney (PW) JT8D–200 series turbofan engine. The investigation revealed a localized work hardened layer found in the tierod hole of the fan hub from which a crack initiated and propagated to failure in low cycle fatigue. The FAA has determined that the work hardened layer was the result of a coolant channel drill using a single plunge drilling procedure during manufacture. This condition, if not corrected, could result in fan hub failure due to tierod or counterweight hole cracking, which could result in an uncontained engine failure and damage to the aircraft.

The FAA has reviewed and approved the technical contents of PW Alert Service Bulletin (ASB) No. A6272, dated September 24, 1996, that describes procedures for cleaning and eddy current (ECI) and fluorescent penetrant (FPI) inspection of tierod and counterweight holes for cracks; removal of bushings; and the cleaning, FPI, and ECI of bushed holes for cracks. Even though the ASB contains three of the serial numbers (S/Ns) of the fan hubs that were removed from service in accordance with AD 96–15–06, the manufacturer has informed the FAA that these fan hubs have been destroyed during the investigation to confirm the failure mode.

Since an unsafe condition has been identified that is likely to exist or develop on other products of this same type design, the proposed AD would require cleaning, initial and repetitive ECI and FPI for cracks of tierod and counterweight holes; removing bushings; initial and repetitive ECI and FPI of bushed holes for cracks; and, if necessary, replacing with serviceable parts. The compliance requirements allow selection of inspection schedules depending on fan hub S/Ns listed in the ASB, and includes an inspection schedule for those fan hubs whose S/Ns are not listed in the ASB. In addition, this AD would require reporting findings of cracked fan hubs. The actions would be required to be accomplished in accordance with the ASB described previously.

There are approximately 2,624 engines of the affected design in the worldwide fleet. The FAA estimates that 1,279 engines installed on aircraft of U.S. registry would be affected by this proposed AD, that it would take approximately 20 work hours per engine for 360 engines to disassemble, remove, inspect, and reassemble engines, and 4 work hours per engine for 919 engines to inspect at piece- part exposure. The average labor rate is $60 per work hour. Based on these figures, the total cost impact of the proposed AD on U.S. operators is estimated to be $862,560.

The regulations proposed herein would not have substantial direct effects on the States, on the relationship between the national government and the States, or on the distribution of power and responsibilities among the various levels of government. Therefore, in accordance with Executive Order 12612, it is determined that this proposal would not have sufficient federalism implications to warrant the preparation of a Federalism Assessment.

For the reasons discussed above, I certify that this proposed regulation (1) is not a ''significant regulatory action'' under Executive Order 12866; (2) is not a ''significant rule'' under the DOT Regulatory Policies and Procedures (44 FR 11034, February 26, 1979); and (3) if promulgated, will not have a significant economic impact, positive or negative, on a substantial number of small entities under the criteria of the Regulatory Flexibility Act. A copy of the draft regulatory evaluation prepared for this action is contained in the Rules Docket. A copy of it may be obtained by contacting the Rules Docket at the location provided under the caption **ADDRESSES**.

List of Subjects in 14 CFR Part 39

Air transportation, Aircraft, Aviation safety, Safety.

The Proposed Amendment

Accordingly, pursuant to the authority delegated to me by the Administrator, the Federal Aviation Administration proposes to amend part 39 of the Federal Aviation Regulations (14 CFR part 39) as follows:

PART 39—AIRWORTHINESS DIRECTIVES

1. The authority citation for part 39 continues to read as follows:

Authority: 49 USC 106(g), 40113, 44701.

§ 39.13 [Amended]

2. Section 39.13 is amended by adding the following new airworthiness directive:

Pratt & Whitney: Docket No. 96–ANE–33.

Applicability: Pratt & Whitney (PW) JT8D–209, –217, –217C, and –219 series turbofan engines, installed on but not limited to McDonnell Douglas MD–80 series aircraft.

Note: This airworthiness directive (AD) applies to each engine identified in the preceding applicability provision, regardless of whether it has been modified, altered, or repaired in the area subject to the requirements of this AD. For engines that have been modified, altered, or repaired so that the performance of the requirements of this AD is affected, the owner/operator must request approval for an alternative method of compliance in accordance with paragraph (d) of this AD. The request should include an assessment of the effect of the modification, alteration, or repair on the unsafe condition addressed by this AD; and, if the unsafe condition has not been eliminated, the request should include specific proposed actions to address it.

Compliance: Required as indicated, unless accomplished previously.

To prevent front compressor front hub (fan hub), Part Number 5000501–01, failure due to tierod, counterweight, or bushed hole cracking, which could result in an

uncontained engine failure and damage to the aircraft, accomplish the following:

(a) Fan hubs with fewer than 4,000 cycles since new (CSN) on the effective date of this AD need not be inspected until accumulating 4,000 CSN. After the effective date of this AD, upon accumulating 4,000 CSN, perform the requirements of paragraph (b) of this AD.

(b) For fan hubs with 4,000 CSN, accomplish the following:

(1) For fan hubs identified by serial numbers (S/Ns) in Appendix A of PW Alert Service Bulletin (ASB) No. A6272, dated September 24, 1996, inspect for cracks in accordance with the initial inspection intervals of Table 1 of this AD, in accordance with the Accomplishment Instructions, Paragraph A, Part 1, and, if applicable, Paragraph B, of PW ASB No. A6272, dated September 24, 1996.

(i) Fan hubs that have been initially inspected in accordance with paragraph (b)(1) of this AD must be reinspected in accordance with the reinspection requirements of the schedule selected for initial inspection.

(ii) Reinspect for cracks in accordance with the reinspection intervals of Table 1 of this AD in accordance with the Accomplishment Instructions, Paragraph A, Part 1, and, if applicable, Paragraph B, of PW ASB No. A6272, dated September 24, 1996.

TABLE 1

Initial Inspection	Reinspection
1. Within 1,050 cycles in service (CIS) after the effective date of this AD, or prior to accumulating 5,050 CSN, whichever occurs later.	After accumulating 2,500 CIS since last inspection, but not to exceed 6,000 CIS since last inspection.
2. Within 990 CIS after the effective date of this AD, or prior to accumulating 4,990 CSN, whichever occurs later.	After accumulating 2,500 CIS since last inspection, but not to exceed 8,000 CIS since last inspection.
3. Within 965 CIS after the effective date of this AD, or prior to accumulating 4,965 CSN, whichever occurs later.	After accumulating 2,500 CIS since last inspection, but not to exceed 10,000 CIS since last inspection.

(2) For fan hubs with S/Ns not listed in Appendix A of PW ASB No. A6272, dated September 24, 1996, inspect at the next time the fan hub is in the shop at piece-part level, but not to exceed 10,000 CIS after effective date of this AD in accordance with the Accomplishment Instructions, Paragraph A, Part 2, and, if applicable, Paragraph B, of PW ASB No. A6272, dated September 24, 1996.

(3) Remove from service fan hubs found cracked or exceed the bushed hole acceptance criteria in accordance with PW ASB No. A6272, dated September 24, 1996, and replace with serviceable parts.

(c) Report findings of cracked fan hubs within 48 hours after inspection to Robert Guyotte, Manager, Engine Certification Branch, Engine Certification Office, FAA, Engine and Propeller Directorate, 12 New England Executive Park, Burlington, MA 01803–5299; telephone (617) 238–7142, fax (617) 238–7199; Internet: Robert.Guyotte@faa.dot.gov. Reporting requirements have been approved by the Office of Management and Budget and assigned OMB control number 2120-0056.

(d) An alternative method of compliance or adjustment of the compliance time that provides an acceptable level of safety may be used if approved by the Manager, Engine Certification Office. The request should be forwarded through an appropriate FAA Principal Maintenance Inspector, who may add comments and then send it to the Manager, Engine Certification Office.

Note: Information concerning the existence of approved alternative methods of compliance with this airworthiness directive, if any, may be obtained from the Engine Certification Office.

(e) Special flight permits may be issued in accordance with sections 21.197 and 21.199 of the Federal Aviation Regulations (14 CFR 21.197 and 21.199) to operate the aircraft to a location where the requirements of this AD can be accomplished.

Issued in Burlington, Massachusetts, on September 27, 1996.

James C. Jones,

Acting Manager, Engine and Propeller Directorate, Aircraft Certification Service.

[FR Doc. 96–25596 Filed 10–3–96; 8:45 am]

BILLING CODE 4910–13–U

DEPARTMENT OF THE TREASURY

Customs Service

19 CFR Part 10

RIN 1515–AB79

Use of Containers Designated as Instruments of International Traffic in Point-to-Point Local Traffic

AGENCY: U.S. Customs Service, Department of the Treasury.

ACTION: Proposed rule.

SUMMARY: This document proposes to amend the Customs Regulations to provide that certain containers which are designated as instruments of international traffic are deemed to remain in international traffic provided they exit the United States within 365 days of the date on which they are admitted to the U.S. For the importing community as well as Customs, this proposal would greatly simplify the treatment of containers for Customs purposes regardless of their use in domestic commerce.

DATES: Comments must be received on or before December 3, 1996.

ADDRESSES: Written comments (preferably in triplicate) must be submitted to the U.S. Customs Service, ATTN: Regulations Branch, Franklin Court, 1301 Constitution Avenue, NW., Washington, D.C. 20229, and may be inspected at the Regulations Branch, 1099 14th Street, NW., Suite 4000, Washington, DC.

FOR FURTHER INFORMATION CONTACT:

Legal aspects: Glen E. Vereb, Entry and Carrier Rulings Branch, (202–482–6940).

Operational aspects: Eileen A. Kastava, Cargo Control, (202–927–0983).

SUPPLEMENTARY INFORMATION:

Background

Section 141.4, Customs Regulations (19 CFR 141.4), provides that all merchandise imported into the United States is required to be entered, unless specifically exempted. Section 141.4(b)(3) provides an exception for instruments of international traffic as described, and under the conditions provided for, in § 10.41a, Customs Regulations (19 CFR 10.41a).

Pursuant to 19 U.S.C. 1322, vehicles and other instruments of international traffic shall be excepted from the application of the Customs laws to such extent and subject to such terms and conditions as may be prescribed in regulations or instructions of the Secretary of the Treasury.

The Customs Regulations issued under the authority of 19 U.S.C. 1322 are contained in § 10.41a. Section 10.41a(a)(1) designates as instruments of international traffic lift vans, cargo vans, shipping tanks, skids, pallets, caul boards, and cores for textile fabrics in use or to be used in the shipment of merchandise in international traffic.

Section 10.41a(a)(1) also authorizes the Commissioner of Customs to designate as instruments of international traffic such additional articles or classes of articles as he shall find should be so designated. Instruments so designated may be released without entry or the payment of duty, subject to the provisions of § 10.41a. Instruments so designated are also stated to be duty-free in subheading 9803.00.50, Harmonized Tariff Schedule of the United States.

Section 10.41a(d) provides that if an instrument of foreign origin which has been increased in value or improved in condition by a process of manufacture or other means while abroad is released under § 10.41a and is subsequently diverted to point-to-point local traffic within the United States, or is otherwise withdrawn from its use as an instrument of international traffic, it becomes subject to entry and the payment of any applicable duties.

Nevertheless, § 10.41a(f) states in effect that, except for the application of the coastwise trade laws (see § 4.93, Customs Regulations (19 CFR 4.93)), no part of § 10.41a precludes (1) the use of an instrument in picking up and delivering loads at intervening points in the United States while en route between the port of arrival and the port of destination of its imported cargo, (2) the use of an instrument while en route from such point of destination of imported cargo to a point where export cargo is to be loaded or to an exterior port of departure by a reasonably direct route to, or nearer to, the place of such loading or departure, or (3) the use of a ''container'' as defined in the Customs Convention on Containers (together with its normal accessories and equipment if imported therewith), when such container arrives empty while en route between the port of arrival and a point where export cargo is to be loaded or from that point to an exterior port of departure by a reasonably direct route to, or nearer to, the place of such loading or departure, provided that such point-to-point traffic is incidental to the efficient and economical utilization of the instrument in the course of its use in international traffic.

Section 10.41a(f) also makes clear that none of the uses enumerated above constitutes a diversion to unpermitted point-to-point local traffic within the United States or a withdrawal of an instrument from its use as an instrument of international traffic.

It is proposed to amend § 10.41a(f) so as to apply only to instruments of international traffic other than containers as defined in the Customs Convention on Containers. Permitted domestic traffic in containers which are instruments of international traffic would be addressed in a proposed new § 10.41a(g). Current paragraphs (g), (h) and (i) of § 10.41a would be redesignated as paragraphs (h), (i) and (j), respectively.

The proposed new paragraph (g) of § 10.41a would provide that containers, as defined in Article 1 of the Customs Convention on Containers (1972), are deemed to remain in international traffic provided they exit the U.S. within 365 days of the date on which they are admitted to the U.S. This would be so regardless of the fact that the containers may engage in point-to-point local traffic within the United States. An exit from the U.S., for purposes of this provision, would be defined as a movement across the border of the United States into a foreign country where either:

(1) All merchandise is unladen from the instrument of international traffic; or

(2) Merchandise is laden aboard the instrument of international traffic (if the instrument of international traffic is empty).

Furthermore, the person who filed the application for release under § 10.41a(a)(1) would be responsible for keeping and maintaining such records as would be necessary to establish the international movements of the instruments of international traffic. Such records would be required to be made available for inspection by Customs officials.

Should the container not exit the U.S. within 365 days of the date on which it was admitted under § 10.41a, it would be considered to have been removed from international traffic and entry for consumption would have to be made within 10 business days after the end of the month in which the container was deemed removed from international traffic.

Should entry be required under § 10.41a, all containers removed from international traffic in the same month could be listed on one entry. The entry could be made at any port of entry. Customs may waive the invoice requirement at the time of entry and may use the value of the instrument as carried on the books of the person making entry.

Thus, in brief, the key change contained in this proposal is to allow a container (as defined in Article 1 of the Customs Convention on Containers) to engage in point-to-point domestic traffic provided that such container exits the U.S. within 365 days of the date on which it was admitted to the United States under § 10.41a. This proposal would simplify the Customs treatment of containers for both the public and Customs in that the more difficult-to-apply requirements set forth in § 10.41a(f) would no longer apply to containers.

Containers specially designed and equipped for carriage by one or more modes of transport are duty-free under subheading 8609.00.00, Harmonized Tariff Schedule of the United States. Therefore, Customs expects little or no loss of revenue to the Government under this proposal.

It is noted that the amendments proposed herein are principally the result of written requests submitted by counsel on behalf of certain carrier, leasing, shipping and container companies, and a meeting occurring between the companies' representatives, their counsel and Customs officials.

Comments

Before adopting the proposed amendments, consideration will be given to any written comments that are timely submitted to Customs. Comments submitted will be available for public inspection in accordance with the Freedom of Information Act (5 U.S.C. 552), § 1.4, Treasury Department Regulations (31 CFR 1.4), and § 103.11(b), Customs Regulations (19 CFR 103.11(b)), on regular business days between the hours of 9:00 a.m. and 4:30 p.m. at the Regulations Branch, Franklin Court, 1099 14th Street, NW., Suite 4000, Washington, D.C.

Regulatory Flexibility Act and Executive Order 12866

As explained in the preamble, the proposed amendments would simplify the Customs treatment of containers for the importing public in that the more difficult-to-apply requirements set forth in § 10.41a(f) would no longer apply to containers. As such, pursuant to the provisions of the Regulatory Flexibility Act (5 U.S.C. 601 *et seq.*), it is certified that, if adopted, the proposed amendments will not have a significant economic impact on a substantial number of small entities. Accordingly, the proposed amendments are not subject to the regulatory analysis or other requirements of 5 U.S.C. 603 or 604, nor would they result in a ''significant regulatory action'' under E.O. 12866.

List of Subjects in 19 CFR Part 10

Alterations, Bonds, Customs duties and inspection, Exports, Imports, Preference programs, Repairs, Reporting and recordkeeping requirements, Trade agreements.

Proposed Amendments

It is proposed to amend part 10, Customs Regulations (19 CFR part 10), as set forth below.

PART 10—ARTICLES CONDITIONALLY FREE, SUBJECT TO A REDUCED RATE, ETC.

1. The general authority for part 10 would be revised, and the specific authority for § 10.41a would continue, to read as follows:

Authority: 19 U.S.C. 66, 1202 (General Note 20, Harmonized Tariff Schedule of the United States (HTSUS)), 1321, 1481, 1484, 1498, 1508, 1623, 1624, 3314;

* * * * *

Sections 10.41, 10.41a, 10.107 also issued under 19 U.S.C. 1322;

* * * * *

2. It is proposed to amend § 10.41a by revising paragraph (f) to read as follows; by redesignating paragraphs (g), (h) and (i), as (h), (i) and (j), respectively; and adding a new paragraph (g) to read as follows:

§ 10.41a Lift vans, cargo vans, shipping tanks, skids, pallets, and similar instruments of international traffic; repair components.

* * * * *

(f)(1) Except as provided in paragraph (j) of this section, an instrument of international traffic may be used as follows in point-to-point traffic, provided such traffic is incidental to the efficient and economical utilization of the instrument in the course of its use in international traffic:

(i) Picking up and delivering loads at intervening points in the United States while en route between the port of arrival and the point of destination of its imported cargo; or

(ii) Picking up and delivering loads at intervening points in the United States while en route from the point of destination of imported cargo to a point where export cargo is to be loaded or to an exterior port of departure by a reasonably direct route to, or nearer to, the place of such loading or departure.

(2) Neither use as enumerated in paragraph (f)(1)(i) or (ii) of this section constitutes a diversion to unpermitted point-to-point local traffic within the United States or a withdrawal of an instrument in the United States from its use as an instrument of international traffic under this section.

(g)(1) Except as provided in paragraph (j) of this section, a container (as defined in Article 1 of the Customs Convention on Containers) which is designated as an instrument of international traffic is deemed to remain in international traffic provided that the container exits the U.S. within 365 days of the date on which it was admitted under this section. An exit from the U.S. in this context means a movement across the border of the United States into a foreign country where either:

(i) All merchandise is unladen from the container; or

(ii) Merchandise is laden aboard the container (if the container is empty).

(2) The person who filed the application for release under paragraph (a)(1) of this section is responsible for keeping and maintaining such records as may be necessary to establish the international movements of the containers. Such records shall be made available for inspection by Customs officials upon reasonable notice.

(3) If the container does not exit the U.S. within 365 days of the date on which it is admitted under this section, such container shall be considered to have been removed from international traffic, and entry for consumption must be made within 10 business days after the end of the month in which the container is deemed removed from international traffic. When entry is required under this section, any containers considered removed from international traffic in the same month may be listed on one entry. Such entry may be made at any port of entry. Customs may waive the invoice requirement at the time of entry and may use the value of the container as carried on the books of the person making entry.

* * * * *

Dated: February 29, 1996.

George J. Weise,

Commissioner of Customs.

Dennis M. O'Connell,

Acting Deputy Assistant Secretary of the Treasury.

[FR Doc. 96–25463 Filed 10–3–96; 8:45 am]

BILLING CODE 4820–02–P

Fiscal Service

31 CFR Part 356

Sale and Issue of Marketable Book-Entry Treasury Bills, Notes, and Bonds (Department of the Treasury Circular, Public Debt Series No. 1–93); Correction

AGENCY: Bureau of the Public Debt, Fiscal Service, Department of the Treasury.

ACTION: Proposed rule; correction.

SUMMARY: This document corrects typographical and technical errors in Appendix B of the proposed rule, published on Friday, September 27, 1996, FR Document Number 96–24860 (61 FR 50923). The proposed amendment to 31 CFR Part 356 makes changes necessary to accommodate the public offering of new Treasury inflation-protection securities by the Department of the Treasury.

FOR FURTHER INFORMATION CONTACT: Ken Papaj (Director), Lee Grandy, Chuck Andreatta or Kurt Eidemiller (Government Securities Specialists), Bureau of the Public Debt, Government Securities Regulations Staff, (202) 219–3632.

SUPPLEMENTARY INFORMATION: The following corrections are made to Appendix B of the proposed amendment to 31 CFR Part 356.

Appendix B to Part 356—[Corrected]

(1) On page 50933 in the first column, in the fourth sentence in paragraph A.1. of Section I, the expression ''/2 ='' was omitted from the end of the sentence. The sentence should read as follows: ''Calculation of an interest payment for a fixed-principal security with a par amount of $1,000 and an interest rate of 8% is made in this manner: ($1,000 × .08)/2 = $40.''

(2) On page 50933 in the third column, in the first sentence of paragraph B.2. of Section I, the subscript in a term appears as ''Ref CPIDate.'' This term should note the subscript as follows, ''Ref CPI_{Date}.'' Also, in the same paragraph, the term ''Index Ratio'' is stated with a lower case ''r'' throughout as ''Index ratio.'' The ''r'' should be capitalized to read ''Index Ratio.'' With these two changes the first sentence should read as follows: ''The numerator of the Index Ratio, the Ref CPI_{Date}, is the index number applicable for a specific day, and the denominator of the Index Ratio is the Ref CPI applicable for the original issue date.''

(3) On page 50933 in the second column, in paragraph B.3. of Section I, immediately under the formula, the subscript in a term appears as ''Ref CPIM.'' This term should note the subscript as follows, ''Ref $CPI_{M.}$'' This statement should read as follows: ''RefCPI_M = Ref CPI for the first day of the calendar month in which Date falls.''

(4) On page 50935 in the third column, in the Definitions of Section III, the expression:

$$a_{n\rceil} = \left(1 - v^n\right) / (i/2) = v + v^n + v^2 + v^3 + \cdots + v^n$$

is incorrect. The first instance of ''+ v^n'' should not have appeared. The expression should read as follows:

$$a_{n\rceil} = \left(1 - v^n\right) / (i/2) = v + v^2 + v^3 + \cdots + v^n$$

(5) On page 50935 at the bottom of the second column, in Section III, paragraph A, the resolution of $a_{n\rceil}$ is incorrectly stated as 16.34912050. This number should be 16.34912065.

(6) On page 50935 in the third column, in Section III, paragraph A, the first numerical expression for P is missing a fractional expression. Also, other intermediate equations prior to the final resolution of P have been added. The rounding of some calculations has been changed to conform with Treasury's current conventions. For a clearer understanding of the resolution, the entire resolution of paragraph A is provided in the attachment.

(7) On page 50936 in the first column, in Section III, paragraph B, the equation ''$v^n = 1/(1 + i/2)^a$'' is incorrect.

It should read as follows: ''$v^n = 1/(1 + i/2)^n$.'' In addition, three intermediate equations prior to the final resolution of P have been added. Further, another intermediate equation has been added prior to the resolution of A_{adj}. The equation solving for A_{adj} has also been modified. The entire resolution for paragraph B is provided in the attachment below.

Dated: October 2, 1996.

Richard L. Gregg,

Commissioner of the Public Debt.

BILLING CODE 4810–39–W

ATTACHMENT

A. For inflation-protection securities with a regular first interest payment period:

Resolution:

Index $\text{Ratio}_{\text{Date}}$ = Ref CPI_{Date}/Ref $\text{CPI}_{\text{Issue Date}}$ = 120/120 = 1

A = [(184-184)/184] x 3/2 = 0

A_{adj} = 0 x 1 = 0

$v^n = 1/(1 + i/2)^n = 1/(1 + .031/2)^{19} = 0.74658863$

$a_{n\neg} = (1 - v^n)/(i/2) = (1 - 0.74658863)/(.031/2) = 16.34912065$

$$P = \frac{(C/2) + (C/2)a_{n\neg} + 100v^n}{1+(r/s)(i/2)} - [(s - r)/s](C/2)$$

$$P = \frac{(3/2)+(3/2)(16.34912065)+100(0.74658863)}{1+(184/184)(0.031/2)} - [(184 - 184)/184](3/2)$$

$$P = \frac{1.5 + 24.52368098 + 74.658863}{1.01550000} - 0$$

$$P = \frac{100.68254398}{1.01550000}$$

P = 99.145784

P = 99.146

P_{adj} = P x Index $\text{Ratio}_{\text{Date}}$

P_{adj} = 99.146 x 1 = 99.146

SA = P_{adj} + A_{adj}

SA = 99.146 + 0 = 99.146

B. For inflation-protection securities reopened during a regular interest period where the purchase price includes predetermined accrued interest:

Resolution:

$\text{Index Ratio}_{\text{Date}} = \text{Ref CPI}_{\text{Date}}/\text{Ref CPI}_{\text{Issue Date}} = 132/120 = 1.100$

$v^n = 1/(1 + i/2)^n = 1/(1 + .0340/2)^{18} = 0.73828296$

$a_{n\neg} = (1 - v^n)/(i/2) = (1 - 0.73828296)/(.0340/2)$

$= 15.39512000$

$$P = \frac{(C/2) + (C/2)a_{n\neg} + 100v^n}{1+(r/s)(i/2)} - [(s - r)/s](C/2)$$

$$P = \frac{(3/2)+(3/2)(15.39512000)+100(0.73828296)}{1+(91/181)(0.0340/2)} - [(181 - 91)/181](3/2)$$

$$P = \frac{1.5 + 23.09268 + 73.828296}{1.00854696} - (90/181)(1.5)$$

$$P = \frac{98.420976}{1.00854696} - 0.745856$$

$P = 97.586905 - 0.745856$

$P = 96.841049$

$P = 96.841$

$P_{adj} = P \times \text{Index Ratio}_{\text{Date}}$

$P_{adj} = 96.841 \times 1.100 = 106.5251$

$P_{adj} = 106.525$

$A = [(181-91)/181] \times 3/2 = 0.745856$

$A_{adj} = A \times \text{Index Ratio}_{\text{Date}}$

$A_{adj} = 0.745856 \times 1.100 = 0.820442$

$SA = P_{adj} + A_{adj} = 106.525 + 0.820442$

$SA = 107.345442$

[FR Doc. 96–25636 Filed 10–2–96; 1:52 pm]
BILLING CODE 4810–39–C

DEPARTMENT OF COMMERCE

Patent and Trademark Office

37 CFR Part 1

[Docket No: 960828235–6235–01]

RIN 0651–AA88

Changes Implementing Nucleotide and/or Amino Acid Sequence Listings

AGENCY: Patent and Trademark Office, Commerce.

ACTION: Notice of proposed rulemaking and request for comments.

SUMMARY: The Patent and Trademark Office (PTO) is proposing to amend the rules for submitting nucleic acid or amino acid sequences in computer readable form (CRF) for patent applications to simplify the requirements of the rules, to rearrange portions of the rules for better understanding and to establish consistent rules to permit a single internationally acceptable computer readable form. The Sequence Listing will be presented in an international, language neutral format using numeric identifiers rather than the current subject headings and the paper Sequence Listing will be a separately numbered section of the patent application. Sequences which contain fewer than four (4) specifically identified nucleotides or amino acids will no longer be required to be submitted in computer readable form.

DATE: Written comments must be received by December 3, 1996.

ADDRESSES: Address written comments to: Box Comments—Patents, Assistant Commissioner for Patents, Washington, DC 20231, Attention: Esther M. Kepplinger or by Fax to (703) 305–3601 to her attention. Comments may be sent by mail message over the Internet addressed to seqrule@uspto.gov. The written comments will be available for public inspection in Suite 520, Crystal Park One, 2011 Crystal Drive, Arlington, Virginia.

FOR FURTHER INFORMATION CONTACT: Esther M. Kepplinger, by telephone at (703) 308–2339 or by mail addressed to: Box Comments—Patents, Assistant Commissioner for Patents, Washington, DC 20231 marked to her attention or by Fax to (703) 305–3601 or by electronic mail at ekepplin@uspto.gov.

SUPPLEMENTARY INFORMATION: The existing sequence rules (37 CFR 1.821–1.825) provide a standardized format for the description of nucleotide and amino acid sequence data in patent applications and require the submission of such sequences in computer readable form (CRF). The existing sequence rules have provided the following benefits to the PTO: (1) Improved search capabilities; (2) improved interference detection; (3) more efficient examination; (4) cost savings for the input of the sequence data; (5) more efficient and accurate printing of sequences in patents; (6) exchange of the sequence data with other patent offices electronically and (7) improved public access to the sequences electronically.

In an effort to streamline and reduce the procedural requirements of the existing rules and to respond to the needs of our customers while establishing an internationally acceptable standard, the PTO proposes to modify the current rules requiring the submission of computer readable forms for nucleotide and amino acid sequences.

To decrease the burden on applicants who file applications containing nucleotide and amino acid sequence information under the Patent Cooperation Treaty (PCT), the PTO entered into discussions at the PCT Meeting of International Authorities (MIA) in November 1994 on changing the applicable rules for submission and transfer of Sequence Listings. Under the current PCT rules, each International Searching Authority and national Office may set the standard for submission of the paper and electronic Sequence Listing information. This may impose a burden on applicants of providing several different formats of Sequence Listings in different languages during the international and national phases of the PCT procedure.

Under the current PCT practice, the applicant serves as the data repository for requests during each stage of the PCT practice for new electronic copies of the Sequence Listings.

Under national practice, a Sequence Listing may be required to be translated into the national language at considerable cost and posing the danger that the data could be inadvertently altered.

At the November 1994 MIA to address these problems, rule changes were proposed to require a language neutral Sequence Listing submission which would suffice for PCT and national stage sequence information processing. Initial Trilateral meetings and correspondence suggest that such a sequence submission would be acceptable under European Patent Office (EPO) and Japanese Patent Office (JPO) procedures, thus further lessening the burden on applicants.

These sequence rules are proposed to be revised in concert with World Intellectual Property Organization (WIPO) International Standards ST.23 and ST.24 for the paper and electronic submission of sequence information in patent applications, as well as PCT requirements. This should result in an applicant having to produce a single Sequence Listing that would satisfy the filing requirements in all countries, as well as permitting an applicant to submit only a single electronic Sequence Listing in PCT applications.

In an effort to profit from the experiences of the nucleotide database information providers which pioneered the electronic submission of sequence information, the PTO discussed with them the possible simplification of the PTO sequence submission rules. In response to their advice (which confirmed the PTO experience), the number of mandatory data elements is proposed to be reduced.

Thus, the proposed rule changes include:

(1) Use of numeric identifiers to replace the language subject headings within the submission;

(2) Elimination of unnecessary and confusing data elements;

(3) Movement of the paper Sequence Listing to the end of the application as a section with separately numbered pages;

(4) Modification of 37 CFR § 1.77 to include the paper Sequence Listing as a part of the specification and to provide a place for the paper Sequence Listing in the printed patent;

(5) Elimination of the requirement to provide a submission for sequences with fewer than four specifically defined nucleotides or amino acids;

(6) Use of lower-case one-letter codes for nucleotide bases;

(7) Rearrangement of portions of the rules to improve their context; and

(8) Clarification and simplification of the rules to aid in understanding of the requirements that they set forth.

Request for Comments

The PTO is particularly interested in receiving comments on three queries. Currently sequences containing D-amino acids need not be provided in the ''Sequence Listing'', but the PTO has accepted voluntary submissions of sequences containing D-amino acids.

The commercially available sequence searching software used to search prior art databases is not capable of discerning D-amino acids since they do not have distinct designators. It is for this reason that the rules do not require a computer readable form for the disclosure of sequences which contain D-amino acids.

Those seeking to volunteer the information in accordance with these

rules might be seeking assurance that a machine search of the closest prior art will be conducted by the PTO or they consider the information useful and wish it to be in the database. If the PTO does not accept voluntary submissions, that would exclude information from the databases that at least some applicants believe to be valuable information.

The potential conflict created by accepting these D-amino acid-containing sequences is that the published database will contain sequences with D-amino acids and those using the published database may be operating on the assumption that it does not, given the indication in § 1.821(a)(2) that D-amino acid-containing sequences are not intended to be included. For this reason, there may be an advantage to having the D-amino acids indicated by Xaa to alert the user that the Feature section must be consulted. A disadvantage of voluntary submissions is that they will result in the generation of a database which is incomplete and cannot be relied upon to provide a complete search of the U.S. patent literature including sequences containing D-amino acids.

The PTO seeks comments on the following query:

(1) Should the PTO accept voluntary submissions of computer readable forms and Sequence Listings where a D-amino acid is contained in the sequence? If such voluntary submissions are accepted, should there be a restriction on the choice of identifying a D-amino acid by an Xaa or by its L-amino acid counterpart abbreviation?

Section 1.821(c) will continue to require that all sequence information contained in a disclosure, including in the specification, drawings or claims, be presented in the Sequence Listing in accordance with §§ 1.821—1.825. This provision does not discriminate between prior art sequences and ''new'' sequences. The PTO has received comments in the past and is seeking additional comments on this issue. The suggestion has been made that sequences which are prior art, and/or are contained in a database at the time of filing, need not be provided to the PTO in computer readable form since the sequence information is obtainable by other means. Responsive to these public comments, the PTO is considering amending the rules to permit omission of some sequences from the Sequence Listing if these sequences are admitted prior art to applicant and are in a publicly available, electronic, sequence database and the database accession number is supplied.

The suggestion to exclude prior art sequences was made when §§ 1.821–1.825 were originally adopted. 55 FR 18230, 18237 (1990). The final rules, however, required the submission of all sequence information in computer readable form. The reasons for that decision include: (1) The assessment of whether a particular sequence falls within the requirements of the current rules is simple; (2) the general public is assured that all patents which contain any sequence information contain all of the sequence information in the Sequence Listing and all sequences are available in a computer accessible form; (3) as a publication, the contextual association of new and old information is potentially unique to the patent and very valuable to anyone assessing the state of the art at the time of a patented invention, and thus are desirable to be present in electronic form in association with that patent; and (4) these rules do not require any information to be disclosed in the form of a sequence, but rather require a particular format whenever information is presented in the form of a sequence. These reasons continue to be relevant.

The PTO is concerned about how such a provision would be drafted without creating difficult questions. A provision which excludes sequences whenever a sequence is prior art and has previously been included in a publicly available, electronic, sequence database appears to be straightforward; however, many technical and legal issues would result. What constitutes a publicly available, electronic, sequence database? Would the USPTO and the other patent offices which have similar rules be required to produce a list of internationally accepted databases? What would be the criteria for such acceptance? An additional issue would exist involving electronic records maintenance: is there any assurance that once information is contained in a database that it will be retained and available indefinitely without alteration? Changes to the information in nucleic acid sequence databases resulting from the discovery of sequencing errors are well-known. Does the mere existence of the sequence information in such a record constitute reasonable means of retrieval? Would not one need some text basis or other identifier to retrieve the information?

Concerns have been voiced that the redundancy of including old sequences in the PTO database creates electronic searching problems, such as increased cost and reduced speed. Upon investigation, it has been found that requiring all disclosed sequences to be included in the Sequence Listing does not cause search processing problems at the PTO or incur increased costs. The PTO seeks comments on the following query:

(2) Should the provisions of 37 CFR 1.821(c) be altered to exclude some prior art sequences from inclusion in the Sequence Listing even though they are presented in a patent application disclosure as sequences? Should the reference to an accession number of an admitted prior art sequence in a publicly available, electronic, sequence database suffice and exclude that sequence from the requirements of the sequence rules?

At the November 1994 MIA, it was proposed that the Sequence Listings submitted in an international application filed under the PCT would no longer be published on paper. It was suggested that the Sequence Listings be published electronically and be available in the electronic form from several sequence repositories throughout the world. These repositories would have the Sequence Listings available in electronic form at the time of publication of the PCT pamphlet.

The PTO seeks comments on the following query:

(3) Should Sequence Listings filed in an international application filed under the PCT be published only electronically and made available for retrieval electronically by an accession number from several sequence repositories?

Written comments will be available for public inspection and will be available on the Internet (address: www.uspto.gov). Commentators should note that since their comments will be made publicly available, information that is not desired to be made public, such as the address and phone number of the commentator, should not be included in the comments. A public hearing will not be conducted.

Discussion of Specific Rules

Section 1.77 is proposed to be amended by revising paragraph (g), which would provide for a reference to a Sequence Listing Annex, if any exists. In the application as filed, on a separate page immediately before the claims, reference would be made to a Sequence Listing Annex and the Sequence Listing would be provided as a separately numbered section or Annex to the application. In a printed patent the Sequence Listing would appear immediately before the claims.

Section 1.77 is proposed to be amended to redesignate existing paragraphs (g)–(j) as paragraphs (h)–(k) and add an additional paragraph (l) Sequence Listing Annex. In the application as filed, the Sequence Listing would be provided by applicants as a separately numbered section or

Annex of the application. The pages of the Sequence Listing Annex should be numbered independently from the specification using sequential integers preceded by ''A'' to identify them as a part of the Annex and to prevent any confusion which might arise from using numbers already used in the specification. In a printed patent the Sequence Listing would be printed immediately before the claims. In cases where the Sequence Listing is voluminous, the files are difficult to handle. This change would permit easier storage of very large Sequence Listings apart from the main part of the application during pendency. The presentation of the Sequence Listing as a separate Annex would also facilitate compliance with PCT requirements and other national patent office rules.

Sections 1.821(a)(1) and (2) are proposed to be amended by referring to sections in World Intellectual Property Organization (WIPO) Handbook on Industrial Property Information and Documentation, Standard ST.23, paragraphs 8 through 12, April 1994, herein incorporated by reference, rather than to paragraphs in § 1.822. The WIPO Standard ST. 23 (April 1994) is consistent with § 1.822 except for certain corrections which are noted herein and the requirement of the use of the lower case for the one-letter code for nucleotide bases. The proposed rule states that the incorporation has been approved. This language is required by the Federal Register. This incorporation by reference will be reviewed by the Director of the Federal Register in accordance with 5 U.S.C. 552(a) and 1 CFR part 51 before any Final Rule is adopted. Copies may be obtained from the World Intellectual Property Organization; 34 chemin des Colombettes; 1211 Geneva 20 Switzerland. Copies may be inspected at the Patent Search Room; Crystal Plaza 3, Lobby Level; 2021 South Clark Place; Arlington, VA 22202; or at the Office of the Federal Register, 800 North Capitol Street, NW, Suite 700, Washington, DC 20408.

Section 1.821(a) is proposed to be amended so that sequences with fewer than four specifically defined amino acids or nucleotides would be expressly excluded from this rule. ''Specifically defined'' means those amino acids other than ''Xaa'' and those nucleotide bases other than ''N'' defined in accordance with WIPO Standard ST.23.

This change is being proposed to reduce the burden on applicants for those sequences that contain only a minimal amount of sequence information. For example, if an amino acid sequence is disclosed as being entirely ''Xaa'' residues, the 1990 version of the sequence rules would require this sequence to be submitted in computer readable form. However, this sequence has no value as sequence information because each of the positions is represented as a ''wild card.'' Such low-information sequences are not very useful in any sequence matching and alignment algorithm. In order to minimize the inclusion of such low-information-value sequence data in the database and to relieve the burden on applicants to submit low-information-value sequences, the Office proposes this change to the sequence rules. If applicants should wish to voluntarily submit a CRF for such sequences, they would be accepted and entered in the PTO's database.

It is not necessary that any of the non-N or non-Xaa residues be adjacent to any other non-N or non-Xaa residue in order for a sequence to be subject to § 1.821(a).

Sections 1.821(a)(2) and 1.822(b) are proposed to be amended by changing ''elsewhere in the 'Sequence Listing' '' to ''in the Feature section.'' The purpose of this change is to enhance clarity of the rule. The only place in the ''Sequence Listing'' where additional information is permitted is in the Feature section. The current language implies that there are other acceptable portions of the ''Sequence Listing'' appropriate for additional information and thus is ambiguous and misleading.

Section 1.821(a)(2) will continue to indicate that sequences containing D-amino acids need not comply with the provisions of §§ 1.822–1.825. To date, the PTO has accepted voluntary submissions of sequences which contain D-amino acids. The sequence information has either indicated an Xaa at each occurrence of a D-amino acid or has indicated the amino acid (or imino acid) by abbreviation as if it were an L-amino acid (or imino acid) and explained the existence of the D-amino acid in the Feature section associated with that sequence.

Section 1.821(c) is proposed to be amended by clarifying and establishing a language neutral format sequence listing. Specifically, the use of integer identifiers is proposed for identifying sequences. Where a sequence integer identifier is intentionally omitted, it must be noted by applicant to avoid confusion in the published document.

Section 1.821(d) is proposed to be amended by changing ''assigned identifier'' to ''integer identifier'' to be consistent with the term used in § 1.821(c).

Section 1.821(d) is proposed to be amended by adding the phrase, ''preceded by 'SEQ ID NO:' ''. This change is necessitated by the change to § 1.821(c). Since the integer identifier in the ''Sequence Listing'' would be defined now as a numeral only, it is necessary that any reference to a particular sequence in the specification and claims be preceded by ''SEQ ID NO:''. It is not acceptable to use only a numeric identifier, such as ''<200>'' or ''<400>''—see infra Sequence Listing table, in the description or the claims because one reading a patent may not reasonably be presumed to be familiar with the meanings of numeric identifiers.

Section 1.821(e) is proposed to be amended by setting forth the procedure for transferring an accepted computer readable Sequence Listing from one application to a subsequently filed application. The existing rules did not adequately describe the process of transferring a computer readable Sequence Listing into a new application if an identical CRF was previously accepted by the PTO for another application. A further description of the intended procedures has been added for purposes of clarity. This section is intended to describe that if a computer readable Sequence Listing is identical to one that is error-free and already on file at the PTO, an applicant has two options. A new diskette may be submitted, or an applicant may submit a statement clearly directing the PTO to use the previously submitted CRF since they are identical, and that the paper copy of the Sequence Listing in the new application is identical to the disk in the previous application.

Section 1.821(g) is proposed to be amended by correcting the reference to 35 U.S.C. 111(a) applications. Section 1.821(h) is proposed to be amended by clarifying that this rule applies to all international applications searched and examined by the PTO. In addition to international applications filed in the United States Receiving Office, the United States is a competent International Searching Authority (ISA) for applications filed in receiving Offices of, or acting for, Brazil, Israel, Mexico, and Trinidad and Tobago. The United States is also a competent ISA for applications filed in the International Bureau where at least one of the applicants is a resident or national of the United States or a resident or national of Barbados. In addition, the United States acts as an International Preliminary Examining Authority for certain applications searched in the EPO. The language change regarding the time limit for compliance and statement accompanying the submission are

necessary to conform with the language found in PCT Rule 13ter.1.

Section 1.822 is proposed to be revised for clarity and better organization and to accommodate an international request for the use of *lower case* one-letter codes for nucleotide bases.

Section 1.822 (b) is proposed to be amended to refer to WIPO Standard ST.23 (April 1994) and incorporate the information therein. The reorganization groups all nucleotide and all amino acid formats together.

Section 1.822 (c)(1) is proposed to be amended by requiring the use of lower case one-letter code for the nucleotide bases. This change would put the PTO requirements in conformance with most large databases. Additionally, the use of lower case letters in a sequence makes the confusion of ''g'' for ''c'' and vice versa less likely.

Current paragraph (d) is proposed to be redesignated as a part of subparagraph (c)(3) and current paragraph (e) is proposed to be deleted with the substance of the paragraph being incorporated into (d)(1). Current paragraph (f) is proposed to be redesignated as subparagraph (c)(2); current paragraph (g) is proposed to be redesignated as subparagraph (c)(3) and amended to incorporate current paragraph (d). Current paragraph (h) is proposed to be redesignated as subparagraph (d)(2). Current paragraphs (i) and (j) are proposed to be redesignated as (c)(4) and (c)(5). Current paragraph (k) is proposed to be redesignated as (d)(3). Current paragraph (l) is proposed to be redesignated as (c)(6) and current paragraph (m) is proposed to be redesignated as (d)(4). Current paragraph (n) is proposed to be redesignated as (c)(7) and amended to delete a sentence, the substance of which is incorporated into (d)(4).

Paragraph (d)(1) is proposed to be added to include a reference to WIPO Standard ST.23 (April 1994). Paragraphs (d)(2–4) incorporate the material from current paragraphs (h), (k), (m) and a sentence of (n). Paragraph (d)(5) is proposed to be added to clarify that the use of terminator symbols is not acceptable in amino acid sequences either as ''internal'' terminator symbols or following the carboxy terminal amino acid of a peptide or polypeptide.

Current paragraph (o) is proposed to be redesignated as paragraph (e) and amended to recite integer identifier to be consistent with § 1.821 (c) and to permit the language neutral submission.

Current paragraph (p) is proposed to be deleted.

The lists of nucleic acid and amino acid abbreviations and the lists of modified base controlled vocabulary and the modified and unusual amino acids would be replaced by reference to WIPO Standard ST.23 RECOMMENDATION FOR THE PRESENTATION OF NUCLEOTIDE AND AMINO ACID SEQUENCE LISTINGS IN PATENT APPLICATIONS AND IN PUBLISHED PATENT DOCUMENTS (April 1994) to simplify and shorten the rules. This information will also appear in an appropriate section of the Manual of Patent Examining Procedure to assist applicants in preparing Sequence Listings. For purposes of facilitating review of these proposed rule changes, appropriate corrected excerpts of paragraphs 8, 9, 11 and 12 of WIPO Standard ST.23 are provided below.

WIPO Standard ST.23, paragraph 8, provides that the bases of a nucleotide sequence should be represented using the following one-letter code for nucleotide sequence characters.

Symbol	Meaning	Origin of designation
A	A	Adenine
G	G	Guanine.
C	C	Cytosine.
T	T	Thymine.
U	U	Uracil.
R	G or A	puRine.
Y	T/U or C	pYrimidine.
M	A or C	aMino.
K	G or T/U	Keto.
S	G or C	Strong interactions 3H-bonds.
W	A or T/U	Weak interactions 2H-bonds.
B	G or C or T/U	not A.
D	A or G or T/U	not C.
H	A or C or T/U	not G.
V	A or G or C	not T, not U.
N	(A or G or C or T/U) or (unknown or other).	aNy.

WIPO Standard ST.23, paragraph 9, provides: Modified bases may be represented as the corresponding unmodified bases in the sequence itself if the modified base is one of those listed below and the modification is further described elsewhere in the Sequence Listing. The codes from the list below may be used in the description or the Sequence Listing but not in the sequence itself.

Symbol	Meaning
ac4c	4-acetylcytidine.
chm5u	5-(carboxyhydroxylmethyl)uridine.
cm	2'-O-methylcytidine.
cmnm5s2u	5-carboxymethylaminomethyl-2-thiouridine.
cmnm5u	5-carboxymethylaminomethyluridine.
d	dihydrouridine.
fm	2'-O-methylpseudouridine.
gal q	*beta, D-galactosylqueosine.
gm	2'-O-methylguanosine.
i	inosine.
i6a	N6-isopentenyladenosine.
m1a	1-methyladenosine.
m1f	1-methylpseudouridine.
m1g	1-methylguanosine.
m1i	1-methylinosine.
m22g	2,2-dimethylguanosine.
m2a	2-methyladenosine.
m2g	2-methylguanosine.
m3c	3-methylcytidine.
m5c	5-methylcytidine.
m6a	N6-methyladenosine.
m7g	7-methylguanosine.
mam5u	5-methylaminomethyluridine.
mam5s2u	5-methoxyaminomethyl-2-thiouridine.

Symbol	Meaning
man q	*beta, D-mannosylqueosine.
mcm5s2u	5-methoxycarbonylmethyl-2-thiouridine.
mcm5u	5-methoxycarbonylmethyluridine.
mo5u	5-methoxyuridine.
ms2i6a	2-methylthio-N6-isopentenyladenosine.
ms2t6a	N-((9-beta-D-ribofuranosyl-2-methylthiopurine-6-yl) carbamoyl) threonine.
mt6a	N-((9-beta-D-ribofuranosylpurine-6-yl)N- methylcarbamoyl) threonine.
mv	uridine-5-oxyacetic acid-methylester.
o5u	uridine-5-oxyacetic acid (v).
osyw	wybutoxosine.
p	pseudouridine.
q	*queosine.
s2c	2-thiocytidine.
s2t	5-methyl-2-thiouridine.
s2u	2-thiouridine.
s4u	4-thiouridine.
t	5-methyluridine.
t6a	N-((9-beta-D-ribofuranosylpurine-6-yl)- carbamoyl)threonine.
tm	2'-O-methyl-5-methyluridine.
um	2'-O-methyluridine.
yw	wybutosine.
x	3-(3-amino-3-carboxy-propyl)uridine, (acp3)u.

*Indicates a correction of minor typographical errors.

WIPO Standard ST.23, paragraph 11, provides that the amino acids should be represented using the following three-letter code with the first letter as a capital.

Symbol	Meaning
Ala	Alanine.
Cys	Cysteine.
Asp	Aspartic Acid.
Glu	Glutamic Acid.
Phe	Phenylalanine.
Gly	Glycine.
His	Histidine.
Ile	Isoleucine.
Lys	Lysine.
Leu	Leucine.
Met	Methionine.
Asn	Asparagine.
Pro	Proline.
Gln	Glutamine.
Arg	Arginine.
Ser	Serine.
Thr	Threonine.
Val	Valine.
Trp	Tryptophan.
Tyr	Tyrosine.
Asx	Asp or Asn.
Glx	Glu or Gln.
Xaa	unknown or other.

WIPO Standard ST.23, paragraph 12, provides: Modified and unusual amino acids may be represented as the corresponding unmodified amino acids in the sequence itself if the modified amino acid is one of those listed below and the modification is further described elsewhere in the Sequence Listing. The codes from the list below may be used in the description or the Sequence Listing but not in the sequence itself.

Symbol	Meaning
Aad	2-Aminoadipic acid.
bAad	3-aminoadipic acid.
bAla	beta-Alanine, beta-Aminopropionic acid.
Abu	2-Aminobutyric acid.
4Abu	4-Aminobutyric acid, piperidinic acid.
Acp	6-Aminocaproic acid.
Ahe	2-Aminoheptanoic acid.
Aib	2-Aminoisobutyric acid.
bAib	3-Aminoisobutyric acid.
Apm	2-Aminopimelic acid.
Dbu	*2,4-Diaminobutyric acid.
Des	Desmosine.
Dpm	2,2'-Diaminopimelic acid
Dpr	2,3-Diaminopropionic acid.
EtGly	N-Ethylglycine.
EtAsn	N-Ethylasparagine.
Hyl	Hydroxylysine.
aHyl	allo-Hydroxylysine.
3Hyp	3-Hydroxyproline.
4Hyp	4-Hydroxyproline.
Ide	Isodesmosine.
*aIle	allo-Isoleucine.
MeGly	N-Methylglycine, sarcosine.
*MeIle	N-Methylisoleucine.
MeLys	6-N-Methyllysine.
MeVal	N-Methylvaline.
Nva	Norvaline.
Nle	Norleucine.
Orn	Ornithine.

* Indicates a correction of a minor typographical error.

Section 1.823(a) is proposed to be amended to provide for a reference to a Sequence Listing Annex in the application immediately before the claims and to provide the paper Sequence Listing as an Annex, which is a separately numbered section of the application. This is an internationally desired change and also would facilitate easier storage of very large Sequence Listings separate from the main part of the file during pendency of the application.

Section 1.823(b) is proposed to be amended to insert a table to depict items of information (data elements) which are to be included in the Sequence Listing and to indicate whether they are mandatory or optional. The proposed revisions reflect the change to a language neutral submission. The English language data elements headings would be replaced by numeric identifiers. The numeric identifiers are similar to INID codes (''Internationally agreed Numbers for the Identification of Data'' as per WIPO Standard ST.9, December 1990) already utilized internationally in patent documents. This change would facilitate a single international standard which would eliminate the need for translations into non-English languages.

Large portions of Section 1.823(b) are proposed to be deleted to lessen the burden on applicants and to eliminate collections of material which is of limited use to the Office. The following items are typical of material which would be deleted:

(1)(vi)(C) CLASSIFICATION;

(2)(i)(C) STRANDEDNESS;

(2)(ii) MOLECULE TYPE through (2)(vii)(C) UNITS; and

(2)(ix)(C) IDENTIFICATION METHOD.

In order to clarify the rule, the proposed change would identify specifically those items which can be enumerated once in a Sequence Listing. It is proposed that the recommended designation be eliminated, leaving only mandatory and optional elements. Accordingly, it is proposed to change element <140> Correspondence Address

and elements <150> through <154> from mandatory to optional. Elements <100> General Information, <200> Information for SEQ ID NO, and <400> Sequence Description: SEQ ID NO have been clarified as mandatory. In element <193>, it is proposed to change TELEX to Electronic mail address to be current with technology.

It is proposed to eliminate Strandedness because the information is of limited use to the Office. It is proposed to limit the response for Topology to linear or circular because any other response does not permit an adequate search. Because it is essential to the search to know whether the sequence is circular, providing one of these two responses to this data element is mandatory in the Sequence Listing. Consistent with the international desire for eliminating language in the Sequence Listing, Topology would be identified as L (linear) or C (circular), and sequence Type would be N (nucleotide) or A (amino acid).

It is proposed to change Feature from a recommended to a mandatory element if the sequence contains ''N'', ''Xaa'', a modified or unusual L-amino acid or a modified base. This change would highlight the presence of an unusual residue in the sequence which is important to anyone using Sequence Listing information.

Section 1.824 is proposed to be amended by revising the current paragraphs (a) through (h) into paragraphs (a) through (c).

Specifically, the following changes are proposed for § 1.824:

Current § 1.824, paragraph (a), is proposed to be redesignated as paragraph (a)(1). In addition, the term ''series of diskettes'' would be added to indicate the acceptability of receiving numerous disks for large submissions. Current paragraph (b) is proposed to be redesignated as paragraph (a)(2). Current paragraph (c) is proposed to be redesignated as paragraph (a)(3). Current paragraph (d) is proposed to be deleted because it is incorporated into subparagraph (a)(1). Current paragraph (e) is proposed to be deleted since the PTO has not found it to be necessary and feels it should not be a requirement placed on the applicant, although the applicant may optionally continue the practice of using write-protection if desired. In proposed paragraph (a)(4), a ''compressed file'' format would be introduced as an acceptable means to submit a large sequence listing, and in proposed paragraph (a)(5), directions on suppressing page numbering on the computer readable form version would be added for clarity.

The text of current paragraph (f) is proposed to be deleted, but the list of computer readable files is proposed to be redesignated as subparagraphs under new (b) and (c). In proposed paragraph (b), the explanation for ''pagination'' is proposed to be revised to reflect the correct format required. Proposed paragraph (b)(1) is proposed to be revised by deleting diskettes from PS/2 operating system as an accepted format. In proposed paragraph (c), the diskette requirements are proposed to be rearranged so that the most common diskette size used for submissions is at the top of the list. Also in proposed paragraph (c)(2), ''format'' is proposed to be amended to accommodate the current PTO equipment, and in proposed new paragraphs (c)(3), (4), and (5), additional items would be added to the list of acceptable media types due to the changes in available equipment at the PTO.

Current paragraph (g) is proposed to be redesignated as paragraph (d).

Current paragraph (h) is proposed to be deleted because the text is proposed to be incorporated into paragraph (a)(6). The label requirements would be rewritten more concisely than with the previous rules. In addition, fewer items would be required to be placed on the label under this proposed paragraph because the other items are no longer deemed necessary by the PTO.

Current Appendix A is proposed to be rewritten to reflect the correct format of a Sequence Listing. The proposed Appendix A is presented to provide a sample listing in the correct format as described in the Table of amended § 1.823(b). This sample includes the use of numeric identifiers which reflect the change to a language neutral submission. Current Appendix B is proposed to be deleted as the information it presents is no longer valid under changes in this proposed rule.

Review Under the Paperwork Reduction Act of 1995

This proposed rule change contains information collection requirements which are subject to review by the Office of Management and Budget (OMB) under the Paperwork Reduction Act of 1995, 44 U.S.C. 3501, *et seq.* The title, description and respondent description of the information collection is shown below with an estimate of the annual reporting burdens. Included in the estimate is the time for reviewing instructions, gathering and maintaining the data needed, and completing and reviewing the collection of information. With respect to the following collection of information, the PTO invites comments on: (1) Whether the proposed collection of information is necessary for the proper performance of the PTO's functions, including whether the information will have practical utility; (2) the accuracy of the PTO's estimate of the burden of the proposed collection of information, including the validity of the methodology and assumptions used; (3) ways to enhance the quality, utility, and clarity of the information to be collected; and (4) ways to minimize the burden of the collection of information on respondents, including through the use of automated collection techniques, when appropriate, and other forms of information technology.

Notwithstanding any other provision of law, no person is required to respond to nor shall a person be subject to a penalty for failure to comply with a collection of information subject to the requirements of the Paperwork Reduction Act unless that collection of information displays a currently valid OMB control number.

OMB Number: 0651–0024.

Title: Requirements for Patent Applications Containing Nucleotide Sequence and/or Amino Acid Sequence Disclosures.

Form Numbers: None.

Type of Review: Revision of currently approved collection.

Affected Public: Individuals or households, business or other for-profit institutions, not-for-profit institutions, and Federal Government.

Estimated Number of Respondents: 4,600.

Estimated Time Per Response: 80 minutes.

Estimated Total Annual Burden Hours: 6,133.

Needs and Uses: The PTO requires biotechnology patent applicants to submit sequence information to enable the PTO to properly examine and process their applications.

As required by the Paperwork Reduction Act of 1995, 44 U.S.C. 3507(d), the PTO has submitted a copy of this proposed rulemaking to OMB for its review of this information collection. Interested persons are requested to send comments regarding this information collections, including suggestions for reducing this burden, to the Office of Information and Regulatory Affairs of OMB, New Executive Office Bldg., 725 17th Street, NW., Room 10235, Washington, D.C. 20503, Attn: Desk Officer for the Patent and Trademark Office.

OMB is required to make a decision concerning the collection of information in these proposed regulations between 30 and 60 days after the publication of this document in the Federal Register.

Therefore, a comment to OMB is best assured of having its full effect if OMB receives it within 30 days of publication. This does not affect the deadline for the public to comment to the PTO on the proposed regulations.

Other Considerations

This proposed rule change is in conformity with the requirements of the Regulatory Flexibility Act (5 U.S.C. 601 *et seq.*), Executive Order 12612, and the Paperwork Reduction Act of 1995, 44 U.S.C. 3501 *et seq.* It has been determined that this proposed rule is not significant for the purposes of Executive Order 12866.

The Assistant General Counsel for Legislation and Regulation of the Department of Commerce has certified to the Chief Counsel for Advocacy, Small Business Administration, that this proposed rule change would not have a significant economic impact on a substantial number of small entities (Regulatory Flexibility Act, 5 U.S.C. 601 *et seq.*). The principal effect of this rule change is to simplify and clarify the rules governing the submission of Sequence Listings for patent applications containing nucleic acid and/or amino acid sequences.

The PTO has also determined that this proposed rule change has no Federalism implications affecting the relationship between the National Government and the States as outlined in Executive Order 12612.

List of Subjects in 37 CFR Part 1

Administrative practice and procedure, Courts, Freedom of Information, Inventions and patents, Reporting and record-keeping requirements, Small businesses.

For the reasons set forth in the preamble and under the authority granted to the Commissioner of Patents and Trademarks by 35 U.S.C. 6, the PTO proposes to amend 37 CFR part 1 as set forth below. Removals are indicated by brackets ([]) and additions indicated by arrows (> <).

PART 1—RULES OF PRACTICE IN PATENT CASES

1. The authority citation for 37 CFR part 1 would continue to read as follows:

Authority: 35 U.S.C. 6 unless otherwise noted.

2. Section 1.77 is proposed to be amended by redesignating current paragraphs (g) through (j) as paragraphs (h) through (k) and by adding new paragraphs (g) and (l) to read as follows:

§ 1.77 Arrangement of application elements.

* * * * *

>(g) Reference to Sequence Listing Annex.<

[(g)]>(h)< Claim or claims.

[(h)]>(i)< Abstract of the disclosure.

[(i)]>(j)< Signed oath or declaration.

[(j)]>(k)< Drawings.

>(l) Sequence Listing Annex.<

3. Section 1.821 is proposed to be amended by revising paragraphs (a) and (c) through (h) to read as follows:

§ 1.821 Nucleotide and/or amino acid sequence disclosures in patent applications.

(a) Nucleotide and/or amino acid sequences as used in §§ 1.821 through 1.825 are interpreted to mean an unbranched sequence of four or more amino acids or an unbranched sequence of ten or more nucleotides. Branched sequences are specifically excluded from this definition. >Sequences with fewer than four specifically defined nucleotides or amino acids are specifically excluded from this rule. ''Specifically defined'' means those amino acids other than ''Xaa'' and those nucleotide bases other than ''N'' defined in accordance with the World Intellectual Property Organization (WIPO) Handbook on Industrial Property Information and Documentation, Standard ST.23: Recommendation for the Presentation of Nucleotide and Amino Acid Sequence Listings in Patent Applications and in Published Patent Documents, paragraphs 8 through 12, April 1994, herein incorporated by reference. (Hereinafter ''WIPO Standard ST.23 (April, 1994)''). This incorporation by reference was approved by the Director of the Federal Register in accordance with 5 U.S.C. 552(a) and 1 CFR part 51. Copies of ST.23 may be obtained from the World Intellectual Property Organization; 34 chemin des Colombettes; 1211 Geneva 20 Switzerland. Copies of ST.23 may be inspected at the Patent Search Room; Crystal Plaza 3, Lobby Level; 2021 South Clark Place; Arlington, VA 22202; or at the Office of the Federal Register, 800 North Capitol Street, NW, Suite 700, Washington, DC. < Nucleotides and amino acids are further defined as follows:

(1) *Nucleotides* are intended to embrace only those nucleotides that can be represented using the symbols set forth in [§ 1.822(b)(1)] >WIPO Standard ST.23 (April 1994), paragraph 8<. Modifications, *e.g.*, methylated bases, may be described as set forth in [§ 1.822(b)] >WIPO Standard ST.23 (April 1994), paragraph 9< , but shall not be shown explicitly in the nucleotide sequence.

(2) *Amino acids* are those L-amino acids commonly found in naturally occurring proteins and are listed in [§ 1.822(b)(2)] >WIPO Standard ST.23 (April 1994), paragraph 11<. Those amino acid sequences containing D-amino acids are not intended to be embraced by this definition. Any amino acid sequence that contains post-translationally modified amino acids may be described as the amino acid sequence that is initially translated using the symbols shown in [§ 1.822(b)(2)] >WIPO Standard ST.23 (April 1994), paragraph 11< with the modified positions; *e.g.*, hydroxylations or glycosylations, being described as set forth in [§ 1.822(b)] >WIPO Standard ST.23 (April 1994), paragraph 12<, but these modifications shall not be shown explicitly in the amino acid sequence. Any peptide or protein that can be expressed as a sequence using the symbols in [§ 1.822(b)(2)] >WIPO Standard ST.23 (April 1994), paragraph 11< in conjunction with a description [elsewhere in the ''Sequence Listing''] >in the Feature section< to describe, for example, modified linkages, cross links and end caps, non-peptidyl bonds, etc., is embraced by this definition.

(b) * * *

(c) Patent applications which contain disclosures of nucleotide and/or amino acid sequences must contain, as a separate part of the disclosure on paper copy, hereinafter referred to as the ''Sequence Listing,'' a disclosure of the nucleotide and/or amino acid sequences and associated information using the symbols and format in accordance with the requirements of §§ 1.822 and 1.823. Each sequence disclosed must appear separately in the ''Sequence Listing.'' Each sequence set forth in the ''Sequence Listing'' shall be assigned a separate >integer< identifier [written as SEQ ID NO:1, SEQ ID NO:2, SEQ ID NO:3, etc]. >The integer identifiers shall begin with 1 and increase sequentially by integers. If no sequence is present for an integer identifier, the words ''This sequence omitted'' shall appear following the integer identifier.<

(d) Where the description or claims of a patent application discuss a sequence listing that is set forth in the ''Sequence Listing'' in accordance with paragraph (c) of this section, reference must be made to the sequence by use of the [assigned] >integer< identifier, >preceded by ''SEQ ID NO:''< in the text of the description or claims, even if the sequence is also embedded in the text of the description or claims of the patent application.

(e) A copy of the ''Sequence Listing'' referred to in paragraph (c) of this section must also be submitted in computer readable form in accordance with the requirements of § 1.824. The computer readable form is a copy of the ''Sequence Listing'' and will not necessarily be retained as a part of the patent application file. If the computer readable form of a new application is to be identical with the computer readable form of another application of the applicant on file in the Office, reference may be made to the other application and computer readable form in lieu of filing a duplicate computer readable form in the new application >if the computer readable form in the other application was compliant with all of the requirements of these rules<. The new application shall be accompanied by a letter making such reference to the other application and computer readable form, both of which shall be completely identified. >In the new application, applicant must also request the use of the compliant computer readable ''Sequence Listing'' that is already on file for the other application and must state that the paper copy of the ''Sequence Listing'' in the new application is identical to the computer readable copy filed for the other application.<

(f) In addition to the paper copy required by paragraph (c) of this section and the computer readable form required by paragraph (e) of this section, a statement that the content of the paper and computer readable copies are the same must be submitted with the computer readable form. Such a statement must be a verified statement if made by a person not registered to practice before the Office.

(g) If any of the requirements of paragraphs (b) through (f) of this section are not satisfied at the time of filing under 35 U.S.C. 111 >(a)<or at the time of entering the national stage under 35 U.S.C. 371, applicant has one month from the date of a notice which will be sent requiring compliance with the requirements in order to prevent abandonment of the application. Any submission in response to a requirement under this paragraph must be accompanied by a statement that the submission includes no new matter. Such a statement must be a verified statement if made by a person not registered to practice before the Office.

(h) If any of the requirements of paragraphs (b) through (f) of this section are not satisfied at the time of filing [,in the United States Receiving Office,] an international application under the Patent Cooperation Treaty (PCT) [applicant has one month from the date of a notice which] >, which application is to be searched by the United States International Searching Authority or examined by the United States International Preliminary Examining Authority, applicant< will be sent >a notice< requiring compliance with the requirements [,or such other time as may be set by the Commissioner, in which to comply] >within a prescribed time period<. Any submission in response to a requirement under this paragraph must be accompanied by a statement that the submission does not include [new] matter [or go] >which goes< beyond the disclosure in the international application as filed. Such a statement must be a verified statement if made by a person not registered to practice before the Office. If applicant fails to timely provide the required computer readable form, the United States International Searching Authority shall search only to the extent that a meaningful search can be performed >and the United States International Preliminary Examining Authority shall examine only to the extent that a meaningful examination can be performed<.

* * * * *

4. Section 1.822 is proposed to be revised to read as follows:

§ 1.822 Symbols and format to be used for nucleotide and/or amino acid sequence data.

(a) The symbols and format to be used for nucleotide and/or amino acid sequence data shall conform to the requirements of paragraphs (b) through [(p)] >(e)< of this section.

(b) The code for representing the nucleotide and/or amino acid sequence characters shall conform to the code set forth in the tables in [paragraphs (b)(1) and (b)(2) of this section] >WIPO Standard ST.23 (April 1994), paragraphs 8 and 11. This incorporation by reference was approved by the Director of the Federal Register in accordance with 5 U.S.C. 552(a) and 1 CFR part 51. Copies of ST.23 may be obtained from the World Intellectual Property Organization; 34 chemin des Colombettes; 1211 Geneva 20 Switzerland. Copies of ST.23 may be inspected at the Patent Search Room; Crystal Plaza 3, Lobby Level; 2021 South Clark Place; Arlington, VA 22202; or at the Office of the Federal Register, 800 North Capitol Street, NW, Suite 700, Washington, DC<. No code other than that specified in [this section] >these sections< shall be used in nucleotide and amino acid sequences. A modified base or >modified or unusual< amino acid may be presented in a given sequence as the corresponding unmodified base or amino acid if the modified base or >modified or unusual< amino acid is one of those listed in [paragraphs (p)(1) or (p)(2) of this section] >WIPO Standard ST.23 (April 1994), paragraphs 9 and 12< and the modification is also set forth [elsewhere in the Sequence Listing (for example, FEATURES § 1.823(b)(2)(ix))] >in the Feature section<. Otherwise, all bases or amino acids not appearing in paragraphs [(b)(1) or (b)(2) of this section] >8 and 11 of the WIPO Standard ST.23 (April 1994)< shall be listed in a given sequence as ''N'' or ''Xaa,'' respectively, with further information, as appropriate, given [elsewhere in the Sequence Listing] >in the Feature section<.

[(1) Base codes:

Symbol	Meaning
A	A; adenine.
C	C; cytosine.
G	G; guanine.
T	T; thymine.
U	U; uracil.
M	A or C.
R	A or G.
W	A or T/U.
S	C or G.
Y	C or T/U.
K	G or T/U.
V	A or C or G; not T/U.
H	A or C or T/U; not G.
D	A or G or T/U; not C.
B	C or G or T/U; not A.
N	(A or C or G or T/U) or (unknown or other).

(2) Amino acid three-letter abbreviations:

Abbreviation	Amino acid name
Ala	Alanine.
Arg	Arginine.
Asn	Asparagine.
Asp	Aspartic Acid.
Asx	Aspartic Acid or Asparagine.
Cys	Cysteine.
Glu	Glutamic Acid.
Gln	Glutamine.
Glx	Glutamine or Glutamic Acid.
Gly	Glycine.
His	Histidine.
Ile	Isoleucine.
Leu	Leucine.
Lys	Lysine.
Met	Methionine.
Phe	Phenylalanine.
Pro	Proline.
Ser	Serine.
Thr	Threonine.
Trp	Tryptophan.
Tyr	Tyrosine.
Val	Valine.
Xaa	Unknown or other].

(c) >Format representation of nucleotides:

(1)< A nucleotide sequence shall be listed using the >lower-case letter for

representing the< one-letter code for the nucleotide bases[, as] >set forth< in [paragraph (b)(1) of this section] >WIPO Standard ST.23 (April 1994), paragraph 8<.

[(d) The amino acids corresponding to the codons in the coding parts of a nucleotide sequence shall be typed immediately below the corresponding codons. Where a codon spans an intron, the amino acid symbol shall be typed below the portion of the codon containing two nucleotides.

(e) The amino acids in a protein or peptide sequence shall be listed using the three-letter abbreviation with the first letter as an upper case character, as in paragraph (b)(2) of this section.]

[(f)] >(2)< The bases in a nucleotide sequence (including introns) shall be listed in groups of 10 bases except in the coding parts of the sequence. Leftover bases, fewer than 10 in number, at the end of noncoding parts of a sequence shall be grouped together and separated from adjacent groups of 10 or 3 bases by a space.

[(g)] >(3)< The bases in the coding parts of a nucleotide sequence shall be listed as triplets (codons). >The amino acids corresponding to the codons in the coding parts of a nucleotide sequence shall be typed immediately below the corresponding codons. Where a codon spans an intron, the amino acid symbol shall be typed below the portion of the codon containing two nucleotides.<

[(h) A protein or peptide sequence shall be listed with a maximum of 16 amino acids per line, with a space provided between each amino acid.]

[(i)] >(4)< A nucleotide sequence shall be listed with a maximum of 16 codons or 60 bases per line, with a space provided between each codon or group of 10 bases.

[(j)] >(5)< A nucleotide sequence shall be presented, only by a single strand, in the 5′ to 3′ direction, from left to right.

[(k) An amino acid sequence shall be presented in the amino to carboxy direction, from left to right, and the amino and carboxy groups shall not be presented in the sequence.]

[(l)] >(6)< The enumeration of nucleotide bases shall start at the first base of the sequence with number 1. The enumeration shall be continuous through the whole sequence in the direction 5′ to 3′. The enumeration shall be marked in the right margin, next to the line containing the one-letter codes for the bases, and giving the number of the last base of that line.

[(m) The enumeration of amino acids may start at the first amino acid of the first mature protein, with the number 1. The amino acids preceding the mature protein, e.g., pre-sequences, pro-sequences, pre-pro-sequences and signal sequences, when presented, shall have negative numbers, counting backwards starting with the amino acid next to number 1. Otherwise, the enumeration of amino acids shall start at the first amino acid at the amino terminal as number 1. It shall be marked below the sequence every 5 amino acids.]

[(n)] >(7)< For those nucleotide sequences that are circular in configuration, the enumeration method set forth in paragraph [(l)] >(c)(6)< of this section remains applicable with the exception that the designation of the first base of the nucleotide sequence may be made at the option of the applicant. [The enumeration method for amino acid sequences that is set forth in paragraph (m) of this section remains applicable for amino acid sequences that are circular in configuration.]

>(d) Representation of amino acids:

(1) The amino acids in a protein or peptide sequence shall be listed using the three-letter abbreviation with the first letter as an upper case character, as in WIPO Standard ST.23 (April 1994), paragraph 11.

(2) A protein or peptide sequence shall be listed with a maximum of 16 amino acids per line, with a space provided between each amino acid.

(3) An amino acid sequence shall be presented in the amino to carboxy direction, from left to right, and the amino and carboxy groups shall not be presented in the sequence.

(4) The enumeration of amino acids may start at the first amino acid of the first mature protein, with the number 1. The amino acids preceding the mature protein, *e.g.*, pre-sequences, pro-sequences, pre-pro-sequences and signal sequences, when presented, shall have negative numbers, counting backwards starting with the amino acid next to number 1. Otherwise, the enumeration of amino acids shall start at the first amino acid at the amino terminal as number 1. It shall be marked below the sequence every 5 amino acids. The enumeration method for amino acid sequences that is set forth in this section remains applicable for amino acid sequences that are circular in configuration.

(5) An amino acid sequence that contains internal terminator symbols, *e.g.*, ‘‘Ter’’, ‘‘*’’, or ‘‘.’’, etc., may not be represented as a single amino acid sequence, but shall be presented as separate amino acid sequences.

(e)< [(o)] A sequence with a gap or gaps shall be presented as a plurality of separate sequences, with separate [sequence] >integer< identifiers, with the number of separate sequences being equal in number to the number of continuous strings of sequence data. A sequence that is made up of one or more noncontiguous segments of a larger sequence or segments from different sequences shall be presented as a separate sequence.

[(p) The code for representing modified nucleotide bases and modified or unusual amino acids shall conform to the code set forth in the tables in paragraphs (p)(1) and (p)(2) of this section. The modified base controlled vocabulary in paragraph (p)(1) of this section and the modified and unusual amino acids in paragraph (p)(2) of this section shall not be used in the nucleotide and/or amino acid sequences; but may be used in the description and/or the ‘‘Sequence Listing’’ corresponding to, but not including, the nucleotide and/or amino acid sequence.

(1) Modified base controlled vocabulary:

Abbreviation	Modified base description
ac4c	4-acetylcytidine.
chm5u	5-(carboxyhydroxylmethyl)uridine.
cm	2′-O-methylcytidine.
cmnm5s2u	5-carboxymethylaminomethyl-2-thioridine.
cmnm5u	5-carboxymethylaminomethyluridine.
d	dihydrouridine.
fm	2′-O-methylpseudouridine.
galq	beta,D-galactosylqueosine.
gm	2′-O-methylguanosine.
i	inosine.
i6a	N6-isopentenyladenosine.
m1a	1-methyladenosine.
m1f	1-methylpseudouridine.

Abbreviation	Modified base description
m1g	1-methylguanosine.
m1I	1-methylinosine.
m22g	2,2-dimethylguanosine.
m2a	2-methyladenosine.
m2g	2-methylguanosine.
m3c	3-methylcytidine.
m5c	5-methylcytidine.
m6a	N6-methyladenosine.
m7g	7-methylguanosine.
mam5u	5-methylaminomethyluridine.
mam5s2u	5-methoxyaminomethyl-2-thiouridine.
manq	beta,D-mannosylqueosine.
mcm5s2u	5-methoxycarbonylmethyluridine.
mo5u	5-methoxyuridine.
ms2i6a	2-methylthio-N6-isopentenyladenosine.
ms2t6a	N-((9-beta-D-ribofuranosyl-2-methylthiopurine-6-yl) carbamoyl)threonine.
mt6a	N-((9-beta-D-ribofuranosylpurine-6-yl)N-methyl-carbamoyl)threonine.
mv	uridine-5-oxyacetic acid methylester.
o5u	uridine-5-oxyacetic acid (v).
osyw	wybutoxosine.
p	pseudouridine.
q	queosine.
s2c	2-thiocytidine.
s2t	5-methyl-2-thiouridine.
s2u	2-thiouridine
s4u	4-thiouridine.
t	5-methyluridine.
t6a	N-((9-beta-D-ribofuranosylpurine-6-yl)carbamoyl) threonine.
tm	2′-O-methyl-5-methyluridine.
um	2′-O-methyluridine.
yw	wybutosine.
x	3-(3-amino-3-carboxypropyl)uridine, (acp3)u.

(2) Modified and unusual amino acids:

Abbreviation	Modified and unusual amino acid
Aad	2-Aminoadipic acid.
bAad	3-aminoadipic acid.
bAla	beta-Alanine, beta-Aminopropionic acid.
Abu	2-Aminobutyric acid.
4Abu	4-Aminobutyric acid, piperidinic acid.
Acp	6-Aminocaproic acid.
Ahe	2-Aminoheptanoic acid.
Aib	2-Aminoisobutyric acid.
bAib	3-Aminoisobutyric acid.
Apm	2-Aminopimelic acid.
Dbu	2,4-Diaminobutyric acid.
Des	Desmosine.
Dpm	2,2′-Diaminopimelic acid.
Dpr	2,3-Diaminopropionic acid.
EtGly	N-Ethylglycine.
EtAsn	N-Ethylasparagine.
Hyl	Hydroxylysine.
aHyl	allo-Hydroxylysine.
3Hyp	3-Hydroxyproline.
4Hyp	4-Hydroxyproline.
Ide	Isodesmosine.
aIle	allo-Isoleucine.
MeGly	N-Methylglycine, sarcosine.
MeIle	N-Methylisoleucine.
MeLys	N-Methylvaline.
Nva	Norvaline.
Nle	Norleucine.
Orn	Ornithine.]

5. Section 1.823 is proposed to be revised to read as follows:

§ 1.823 Requirements for nucleotide and/or amino acid sequences as part of the application papers.

(a) The ''Sequence Listing'' required by § 1.821(c), setting forth the nucleotide and/or amino acid sequences, and associated information in accordance with paragraph (b) of this section, must begin on a new page and be titled ''Sequence Listing'' [and appear] >. On a separate page of the application specification,< immediately prior to the claims [.]>, there shall be a reference to the presence of the ''Sequence Listing'' in a ''Sequence Listing Annex.'' The ''Sequence Listing'' shall appear in the ''Sequence Listing Annex,'' which is numbered independently of the numbering of the remainder of the application and shall be placed in the application file. Upon printing the application as a patent, the ''Sequence Listing Annex'' containing the paper ''Sequence Listing'' shall be printed immediately before the patented claims.< Each page of the ''Sequence Listing'' shall contain no more than 66 lines and each line shall contain no more than 72 characters. A fixed-width font shall be used exclusively throughout the ''Sequence Listing.''

(b) The ''Sequence Listing'' shall, except as otherwise indicated, include, in addition to and immediately preceding the actual nucleotide and/or amino acid sequence, the [following items of information.] > numeric identifiers and their accompanying information as shown in the following table. The numeric identifier shall be used only in the ''Sequence Listing.''< The order and presentation of the items of information in the ''Sequence Listing'' shall conform to the arrangement given below [,except that parenthetical explanatory information following the headings (identifiers) is to be omitted]. Each item of information shall begin on a new line [, enumerated with the number/numeral/letter in parentheses as shown below, with the heading (identifier) in upper case characters, followed by a colon, and then followed by the information provided] > beginning with the numeric identifier enclosed in angle brackets as shown<. Except as allowed below, no item of information shall occupy more than one line. [Those items of information that are applicable for all sequences shall only be set forth once in the ''Sequence Listing.''] The submission of those items of information designated with an ''M'' is mandatory. [The submission of those items of information designated with an ''R'' is recommended, but not required.] The submission of those items of information designated with an ''O'' is optional. >Numeric identifiers <100>

through <193> shall only be set forth at the beginning of the ''Sequence Listing.''< Those items designated with ''rep'' may have multiple responses and, as such, the item may be repeated in the ''Sequence Listing.

[(1) GENERAL INFORMATION (Application, diskette/tape and publication information):

(i) APPLICANT (maximum of first ten named applicants; specify one name per line: SURNAME comma OTHER NAMES and/or INITIALS—M/rep):

(ii) TITLE OF INVENTION (title of the invention, as elsewhere in application, four lines maximum—M):

(iii) NUMBER OF SEQUENCES (number of sequences in the ''Sequence Listing'' (M):

(iv) CORRESPONDENCE ADDRESS (M):

(A) ADDRESSEE (name of applicant, firm, company or institution, as may be appropriate):

(B) STREET (correspondence street address, as elsewhere in application, four lines maximum):

(C) CITY (correspondence city address, as elsewhere in application):

(D) STATE (correspondence state, as elsewhere in application):

(E) COUNTRY (correspondence country, as elsewhere in application):

(F) ZIP (correspondence ZIP or postal code, as elsewhere in application):

(v) COMPUTER READABLE FORM (M):

(A) MEDIUM TYPE (type of diskette/tape submitted):

(B) COMPUTER (type of computer used with diskette/tape submitted):

(C) OPERATING SYSTEM (type of operating system used):

(D) SOFTWARE (type of software used to create computer readable form):

(vi) CURRENT APPLICATION DATA (M, if available):

(A) APPLICATION NUMBER (U.S application number, including a series code, a slash and a serial number, or U.S. PCT application number, including the letters PCT, a slash, a two-letter code indicating the U.S. as the Receiving Office, a two-digit indication of the year, a slash and a five-digit number, if available):

(B) FILING DATE (U.S. or PCT application filing date, if available; specify as dd-MMM-yyyy):

(C) CLASSIFICATION (IPC/US classification or F-term designation, where F-terms have been developed, if assigned, specify each designation, left justified, within an eighteen-position alpha numeric field—rep, to a maximum of ten classification designations):

(vii) PRIOR APPLICATION DATA (prior domestic, foreign priority or international application data, if applicable—M/rep):

(A) APPLICATION NUMBER (application number; specify as two-letter country code and an eight-digit application number; or if a PCT application, specify as the letters PCT, a slash, a two-letter code indicating the Receiving Office, a two-digit indication of the year, a slash and a five-digit number):

(B) FILING DATE (document filing date, specify as dd-MMM-yyyy):

(viii) ATTORNEY/AGENT INFORMATION (O):

(A) NAME (attorney/agent name; SURNAME comma OTHER NAMES and/or INITIALS):

(B) REGISTRATION NUMBER (attorney/agent registration number):

(C) REFERENCE/DOCKET NUMBER (attorney/agent reference or docket number):

(ix) TELECOMMUNICATION INFORMATION (O):

(A) TELEPHONE (telephone number of applicant or attorney/agent):

(B) TELEFAX (telefax number of applicant or attorney/agent):

(C) TELEX (telex number of applicant or attorney/agent):

(2) INFORMATION FOR SEQ ID NO: X (rep):

(i) SEQUENCE CHARACTERISTICS (M):

(A) LENGTH (sequence length, expressed as number of base pairs or amino acid residues):

(B) TYPE (sequence type, i.e., whether nucleic acid or amino acid):

(C) STRANDEDNESS (if nucleic acid, number of strands of source organism molecule, i.e., whether single-stranded, double-stranded, both or unknown to applicant):

(D) TOPOLOGY (whether source organism molecule is circular, linear, both or unknown to applicant):

(ii) MOLECULE TYPE (type of molecule sequenced in SEQ ID NO:X (at least one of the following should be included with subheadings, if any, in Sequence Listing—R)):

—Genomic RNA;
—Genomic DNA;
—mRNA
—tRNA;
—rRNA;
—snRNA;
—scRNA;
—preRNA;
—cDNA to genomic RNA;
—cDNA to mRNA;
—cDNA to tRNA;
—cDNA to rRNA;
—cDNA to snRNA;
—cDNA to scRNA;
—Other nucleic acid;

(A) DESCRIPTION (four lines maximum):

—protein and
—peptide.

(iii) HYPOTHETICAL (yes/no—R):

(iv) ANTI-SENSE (yes/no—R):

(v) FRAGMENT TYPE (for proteins and peptides only, at least one of the following should be included in the Sequence Listing—R):

—N-terminal fragment;
—C-terminal fragment and
—internal fragment.

(vi) ORIGINAL SOURCE (original source of molecule sequenced in SEQ ID NO:X—R):

(A) ORGANISM (scientific name of source organism):

(B) STRAIN:

(C) INDIVIDUAL ISOLATE (name/number of individual/isolate):

(D) DEVELOPMENTAL STAGE (give developmental stage of source organism and indicate whether derived from germ-line or rearranged developmental pattern):

(E) HAPLOTYPE:

(F) TISSUE TYPE:

(G) CELL TYPE:

(H) CELL LINE:

(I) ORGANELLE:

(vii) IMMEDIATE SOURCE (immediate experimental source of the sequence in SEQ ID NO:X—R):

(A) LIBRARY (library -type, name):

(B) CLONE (clone(s)):

(viii) POSITION IN GENOME (position of sequence in SEQ ID NO:X in genome—R):

(A) CHROMOSOME/SEGMENT (chromosome/segment—name/number):

(B) MAP POSITION:

(C) UNITS (units for map position, i.e., whether units are genome percent, nucleotide number or other/specify):

(ix) FEATURE (description of points of biological significance in the sequence in SEQ ID NO:X -R/rep):

A) NAME/KEY (provide appropriate identifier for feature—four lines maximum):

(B) LOCATION (specify location according to syntax of DDBJ/EMBL/GenBank Feature Tables Definition, including whether feature is on complement of presented sequence; where appropriate state number of first and last bases/amino acids in feature—four lines maximum):

(C) IDENTIFICATION METHOD (method by which the feature was identified, i.e., by experiment, by similarity with known sequence or to an established consensus sequence, or by similarity to some other pattern—four lines maximum):

(D) OTHER INFORMATION (include information on phenotype conferred,

biological activity of sequence or its product, macromolecules which bind to sequence or its product, or other relevant information—four lines maximum):

(x) PUBLICATION INFORMATION (Repeat section for each relevant publication—O/rep):

(A) AUTHORS (maximum of first ten named authors of publication; specify one name per line: SURNAME comma OTHER NAMES and/or INITIALS—rep):

(B) TITLE (title of publication):

(C) JOURNAL (journal name in which data published):

(D) VOLUME (journal volume in which data published):

(E) ISSUE (journal issue number in which data published):

(F) PAGES (journal page numbers in which data published):

(G) DATE (journal date in which data published; specify as dd-MMM-yyyy, MMM-yyyy or Season-yyyy):

(H) DOCUMENT NUMBER (document number, for patent type citations only; specify as two-letter country code, eight-digit document number (right justified), one letter and as appropriate, one number or a space as a document type code; or if a PCT application specify as the letters PCT, a slash, a two-letter code indicating the Receiving Office, a two-digit indication of the year, a slash and a five-digit number; or if a PCT publication, specify as the two letters WO, a two-digit indication of the year, a slash and a five-digit publication number):

(I) FILING DATE (document filing date, for patent-type citations only; specify as dd-MMM-yyyy):

(J) PUBLICATION DATE (document publication date; for patent-type citations only, specify as dd-MMM-yyyy):

(K) RELEVANT RESIDUES In SEQ ID NO:X (rep): FROM position) TO position)

(xi) SEQUENCE DESCRIPTION: SEQ ID NO:X:]

Numeric identifier	Definition	Comments and format	Mandatory (M) or Optional (O)
<100>	General Information	Leave blank after <100>	M
<110>	Applicant	Max. of 10 names; one name per line; use format: Surname, Other Names and/or Initials; rep.	M
<120>	Title of Invention	Four lines maximum	M
<130>	Number of Sequences	Use an integer as a response	M
<140>	Correspondence Address	140> must be present if subheadings <141>-<146> are used.	O
<141>	Addressee		O
<142>	Street	Four lines maximum	O
<143>	City		O
<144>	State or Province		O
<145>	Country		O
<146>	Zip or Postal Code		O
<150>	Computer Readable Form	Leave blank after <150>	O
<151>	Medium Type	Type of diskette/tape submitted	O
<152>	Computer	Type of computer used to create diskette/tape	O
<153>	Operating System	Type of operating system on computer	O
<154>	Software	Type of software used to create computer readable form.	O
<160>	Current Application Data	Leave blank after <160>; <160> must be present if subheadings <161> & <162> are used.	M, if available.
<161>	Application Number	Specify as: US 07/999,999 or PCT/US96/99999	M, if available.
<162>	Filing Date	Specify as: dd-MMM-yyyy	M, if available
<170>	Prior Application Data	Insert heading/subheadings only if applicable; leave blank after <170>; <170> must be present if subheadings <171> & <172> are used; rep.	M, if applicable
<171>	Application Number	Specify as: US 07/999,999 or PCT/US96/99999	M, if applicable.
<172>	Filing Date	Specify as: dd-MMM-yyyy	M, if applicable.
<180>	Attorney/Agent Information	Leave blank after <180>	O
<181>	Name	Use format: Surname, Other Names and/or Initials	O
<182>	Registration Number		O
<183>	File Reference/Docket Number		O
<190>	Telecommunication Information	Leave blank after <190>	O
<191>	Telephone		O
<192>	Telefax		O
<193>	Electronic mail address		O
<200>	Information for SEQ ID NO:#:	Response shall be an integer representing the SEQ ID NO shown; rep.	M
<210>	Sequence Characteristics	Leave blank after <210>	M
<211>	Length	Respond with an integer expressing the number of bases or amino acid residues.	M
<212>	Type	Whether presented sequence molecule is nucleotide or amino acid, indicated by N or A.	M
<214>	Topology	Whether presented sequence molecule is linear or circular, indicated as L or C.	M
<290>	Feature	Description of points of biological significance in the sequence; leave blank after <290>; rep.	M, if ''N'', ''Xaa'', or a modified or unusual L-amino acid or modified base was used in the sequence.

Numeric identifier	Definition	Comments and format	Mandatory (M) or Optional (O)
<291>	Name/Key	Provide appropriate identifier for feature; four lines maximum.	M, if ''N'', ''Xaa'', or a modified or unusual L-amino acid or modified base was used in the sequence.
<292>	Location	Specify location within sequence; where appropriate state number of first and last bases/amino acids in feature; four lines maximum.	M, if ''N'', ''Xaa'', or a modified or unusual L-amino acid or modified base was used in the sequence.
<294>	Other Information	Other relevant information; four lines maximum	M, if ''N'', ''Xaa'', or a modified or unusual L-amino acid or modified base was used in the sequence.
<300>	Publication Information	Leave blank after <300>; rep	O
<301>	Authors	Maximum of ten named authors of publication; specify one name per line; use format: Surname, Other Names and/or Initials.	O
<302>	Title		O
<303>	Journal		O
<304>	Volume		O
<305>	Issue		O
<306>	Pages		O
<307>	Date	Journal date in which data published; specify as dd-MMM-yyyy, MMM-yyyy or Season-yyyy.	O
<308>	Patent Document Number	Document number; for patent-type citations only	O
<309>	Filing Date	Document filing date, for patent-type citations only; specify as dd-MMM-yyyy.	O
<310>	Publication Date	Document publication date, for patent-type citations only; specify as dd-MMM-yyyy.	O
<311>	Relevant Residues	FROM (position) TO (position)	O
<400>	Sequence Description: SEQ ID NO:#:	Response shall be an integer representing the SEQ ID NO shown; rep.	M

6. Section 1.824 is proposed to be revised to read as follows:

§ 1.824 Form and format for nucleotide and/or amino acid sequence submissions in computer readable form.

(a) The computer readable form required by § 1.821(e) shall [contain a printable copy of the ''Sequence Listing,'' as defined in §§ 1.821(c), 1.822 and 1.823, recorded as] >meet the following specifications:

(1) The computer readable form shall contain< a single [file on] >''Sequence Listing'' as< either a diskette, [or a magnetic tape] >series of diskettes, or other permissible media outlined in § 1.824(c)<. [The computer readable form shall be encoded and formatted such that a printed copy of the ''Sequence Listing'' may be recreated using the print commands of the computer/operating-system configurations specified in paragraph (f) of this section.]

[(b)] >(2)< The [file] >''Sequence Listing''< in paragraph (a) >(l)< of this section shall be [encoded in a subset of the] >submitted in< American Standard Code for Information Interchange (ASCII) >text<. [This subset shall consist of all printable ASCII characters including the ASCII space character plus line-termination, pagination and end-of-file characters associated with the computer/operating-system configurations specified in paragraph (f) of this section.] No other [characters] >formats< shall be allowed.

[(c)] >(3)< The computer readable form may be created by any means, such as word processors, nucleotide/amino acid sequence editors or other custom computer programs; however, it shall [be readable by one of the computer/operating-system configurations specified in paragraph (f) of this section, and shall] conform to [the] >all< specifications [in paragraphs (a) and (b) of] >detailed in< this section.

[(d) The entire printable copy of the ''Sequence Listing shall be contained within one file on a single diskette or magnetic tape unless it is shown to the satisfaction of the Commissioner that it is not practical or possible to submit the entire printable copy of the ''Sequence Listing'' within one file on a single diskette or magnetic tape.

(e) The submitted diskette or tape shall be write-protected such as by covering or uncovering diskette holes, removing diskette write tabs or removing tape write rings.

(f) As set forth in paragraph (c), above, any means may be used to create the computer readable form, as long as the following conditions are satisfied. A submitted diskette shall be readable on one of the computer/operating-system configurations described in paragraphs (1) through (3), below. A submitted tape shall satisfy the format specifications described in paragraph (4), below.]

>(4) File compression is acceptable when using diskette media, so long as the compressed file is in a self-extracting format that will decompress on one of the systems described in paragraph (b) of this section.

(5) Page numbering shall not appear within the computer readable form version of the ''Sequence Listing'' file.

(6) All computer readable forms shall have a label permanently affixed thereto on which has been hand-printed or typed: the name of the applicant, the title of the invention, the name and type of computer and operating system used, and application serial number and filing date, if known.

(b) Computer readable form files submitted must meet these format requirements:<

(1) Computer: IBM PC/XT/AT, >or compatibles< [IBM PS/2 or compatibles]>, or Apple Macintosh<;

[(i)]>(2)< Operating System: [PC–DOS or] MS–DOS [(Versions 2.1 or above)] >, Unix or Macintosh<;

[(ii)]>(3)< Line Terminator: ASCII Carriage Return plus ASCII Line Feed;

[(iii)]>(4)< Pagination: [ASCII Form Feed or Series of Line Terminators] >Continuous file (no ''hard page break'' codes permitted)<;

[(iv) End-of-File: ASCII SUB (Ctrl–Z);

(v) Media:]

>(c) Computer readable form files submitted may be in any of the following media:<

[(A) Diskette—5.25 inch, 360 Kb storage;

(B) Diskette—5.25 inch, 1.2 Mb storage;

(C) Diskette—3.50 inch, 720 Kb storage;

(D) Diskette—3.5 inch, 1.44 Mb storage;]

>(1) Diskette : 3.50 inch, 1.44 Mb storage;

3.50 inch, 720 Kb storage;

5.25 inch, 1.2 Mb storage;

5.25 inch, 360 Kb storage;<

[(vi) Print Command: PRINT filename.extension;

(2) Computer: IBM PC/XT/AT, IBM PS/2 or compatibles;

(i) Operating system: Xenix;

(ii) Line Terminator: ASCII Carriage Return;

(iii) Pagination: ASCII Form Feed or Series of Line Terminators;

(iv) End-of-File: None;

(v) Media:

(A) Diskette—5.25 inch, 360 Kb storage;

(B) Diskette—5.25 inch, 1.2 Mb storage;

(C) Diskette—3.50 inch, 720 Kb storage;

(D) Diskette—3.5 inch, 1.44 Mb storage;

(vi) Print Command: Ipr filename;

(3) Computer: Apple Macintosh;

(i) Operating System: Macintosh;

(ii) Macintosh File Type: text with line termination

(iii) Line Terminator: Pre-defined by text type file;

(iv) Pagination: Pre-defined by text type file;

(v) End-of-File: Pre-defined by text type file;

(vi) Media:

(A) Diskette—3.50 inch, 400 Kb storage;

(B) Diskette—3.50 inch, 800 Kb storage;

(C) Diskette—3.50 inch, 1.4 Mb storage;

(vii) Print Command: Use PRINT command from any Macintosh Application that processes text files, such as Mac-Write or TeachText;

(4) Magnetic tape: 0.5 inch, up to 2400 feet;

(i) Density: 1600 or 6250 bits per inch, 9 track;

(ii) Format: raw, unblocked;

(iii) Line Terminator: ASCII Carriage Return plus optional ASCII Line Feed;

(iv) Pagination: ASCII Form Feed or Series of Line Terminators;

(v) Print Command (Unix shell version given here as sample response—mt/dev/rmt0; 1pr/dev/rmt0):]

>(2) Magnetic tape: 0.5 inch, up to 24000 feet;

Density: 1600 or 6250 bits per inch, 9 track;

Format: Unix tar command; specify blocking factor (not ''block size'')

Line Terminator: ASCII Carriage Return plus ASCII Line Feed;

(3) 8mm Data Cartridge:

Format: Unix tar command; specify blocking factor (not ''block size'')

Line Terminator: ASCII Carriage Return plus ASCII Line Feed;

(4) CD-ROM:

Format: ISO 9660 or High Sierra Format

(5) Magneto Optical Disk:

Size/Storage Specifications: 5.25 inch, 640 Mb<

[(g)]>(d)< Computer readable forms that are submitted to the Office will not be returned to the applicant.

[(h) All computer readable forms shall have a label permanently affixed thereto on which has been hand-printed or typed, a description of the format of the computer readable form as well as the name of the applicant, the title of the invention, the date on which the data were recorded on the computer readable form and the name and type of computer and operating system which generated the files on the computer readable form. If all this information cannot be printed on a label affixed to the computer readable form, by reason of size or otherwise, the label shall include the name of the applicant and the title of the invention and a reference number, and the additional information may be provided on a container for the computer readable form with the name of the applicant, the title of the invention, the reference number and the additional information affixed to the container. If the computer readable form is submitted after the date of filing under 35 U.S.C. 111, after the date of entry in the national stage under 35 U.S.C. 371 or after the time of filing, in the United States Receiving Office, an international application under the PCT, the labels mentioned herein must also include the date of the application number, including series code and serial number.]

7. Section 1.825 is proposed to be amended by revising paragraphs (a), (b) and (d) to read as follows:

§ 1.825 Amendments to or replacement of sequence listing and computer readable copy thereof.

(a) Any amendment to the paper copy of the ''Sequence Listing'' (§ 1.821(c)) must be made by the submission of substitute sheets. Amendments must be accompanied by a statement that indicates support for the amendment in the application, as filed, and a statement that the substitute sheets include no new matter. Such a statement must be a verified statement if made by a person not registered to practice before the Office.

(b) Any amendment to the paper copy of the ''Sequence Listing,'' in accordance with paragraph (a) of this section, must be accompanied by a substitute copy of the computer readable form (§ 1.821(e)) including all previously submitted data with the amendment incorporated therein, accompanied by a statement that the copy in computer readable form is the same as the substitute copy of the ''Sequence Listing.'' Such a statement must be a verified statement if made by a person not registered to practice before the Office.

(c) * * *

(d) If, upon receipt, the computer readable form is found to be damaged or unreadable, applicant must provide, within such time as set by the Commissioner, a substitute copy of the data in computer readable form accompanied by a statement that the substitute data is identical to that originally filed. Such a statement must be a verified statement if made by a person not registered to practice before the Office.

8. Appendix A to subpart G is proposed to be revised to read as follows:

Appendix A To Subpart G Of Part 1—Sample Sequence Listing

[(1) GENERAL INFORMATION:
(i) APPLICANT: Doe, Joan X, Doe, John Q
(ii) TITLE OF INVENTION: Isolation and Characterization of a Gene Encoding a Protease from Paramecium sp.
(iii) NUMBER OF SEQUENCES: 2
(iv) CORRESPONDENCE ADDRESSES:
(A) ADDRESSEE: Smith and Jones
(B) STREET: 123 Main Street
(C) CITY: Smalltown
(D) STATE: Anystate
(E) COUNTRY: USA
(F) ZIP: 12345
(v) COMPUTER READABLE FORM:
(A) MEDIUM TYPE: Diskette, 3.50 inch, 800 Kb storage
(B) COMPUTER: Apple Macintosh
(C) OPERATING SYSTEM: Macintosh 5.0
(D) SOFTWARE: MacWrite
(vi) CURRENT APPLICATION DATA:
(A) APPLICATION NUMBER: 09/999,999
(B) FILING DATE: 28–FEB–1989
(C) CLASSIFICATION: 999/99
(vii) PRIOR APPLICATION DATA:
(A) APPLICATION NUMBER: PCT/US88/99999
(B) FILING DATE: 01–MAR–1988
(viii) ATTORNEY/AGENT INFORMATION:
(A) NAME: Smith, John A
(B) REGISTRATION NUMBER: 00001
(C) REFERENCE/DOCKET NUMBER: 01–0001
(ix) TELECOMMUNICATIONS INFORMATION:
(A) TELEPHONE: (909) 999–001
(B) TELEFAX: (909) 999–0002
(2) INFORMATION FOR SEQ ID NO: 1:
(i) SEQUENCE CHARACTERISTICS:
(A) LENGTH: 954 base pairs
(B) TYPE: nucleic acid
(C) STRANDEDNESS: single
(D) TOPOLOGY: linear
(ii) MOLECULE TYPE: genomic DNA
(iii) HYPOTHETICAL: yes
(iv) ANTI-SENSE: no
(vi) ORIGINAL SOURCE:
(A) ORGANISM: Paramecium sp
(C) INDIVIDUAL/ISOLATE: XYZ2
(G) CELL TYPE: unicellular organism
(vii) IMMEDIATE SOURCE:
(A) LIBRARY: genomic
(B) CLONE: Para-XYZ2/36
(x) PUBLICATION INFORMATION:
(A) AUTHORS: Doe, Joan X, Doe, John Q
(B) TITLE: Isolation and Characterization of a Gene Encoding a Protease from Paramecium sp.
(C) JOURNAL: Fictional Genes
(D) VOLUME: I
(E) ISSUE: 1
(F) PAGES: 1–20
(G) DATE: 02–MAR–1988
(K) RELEVANT RESIDUES IN SEQ ID NO: 1: FROM 1 TO 954

BILLING CODE 3510–16–P

(xi) SEQUENCE DESCRIPTION: SEQ ID NO: 1:

```
ATCGGGATAG  TACTGGTCAA  GACCGGTGGA  CACCGGTTAA  CCCCGGTTAA  GTACCGGTTA    60

TAGGCCATTT  CAGGCCAAAT  GTGCCCAACT  ACGCCAATTG  TTTTGCCAAC  GGCCAACGTT   120

ACGTTCGTAC  GCACGTATGT  ACCTAGGTAC  TTACGGACGT  GACTACGGAC  ACTTCCGTAC   180

GTACGTACGT  TTACGTACCC  ATCCCAACGT  AACCACAGTG  TGGTCGCAGT  GTCCCAGTGT   240

ACACAGACTG  CCAGACATTC  TTCACAGACA  CCCC ATG  ACA CCA CCT GAA CGT  CTC   295
                                         Met  Thr Pro Pro Glu Arg  Leu
                                                                  -30

TTC CTC CCA AGG GTG TGT GGC ACC ACC CTA CAC CTC  CTC  CTT  CTG  GGG     343
Phe Leu Pro Arg Val Cys Gly Thr Thr Leu His Leu  Leu  Leu  Leu  Gly
        -25                 -20                  -15

CTG CTG CTG GTT CTG CTG  CCT  GGG  GCC  CAT  GTGAGGCAGC AGGAGAATGG      393
Leu Leu Leu Val Leu Leu  Pro  Gly  Ala  His
    -10                  -5


GGTGGCTCAG  CCAAACCTTG  AGCCCTAGAG  CCCCCCTCAA  CTCTGTTCTC   CTAG GGG   450
                                                                 Gly

CTC ATG CAT CTT GCC CAC AGC AAC CTC  AAA CCT  GCT  GCT  CAC  CTC  ATT   498
Leu Met His Leu Ala His Ser Asn Leu  Lys Pro  Ala  Ala  His  Leu  Ile
  1             5                    10                      15

GTAAACATCC  ACCTGACCTC  CCAGACATGT  CCCCACCAGC  TCTCCTCCTA  CCCCTGCCTC   558

AGGAACCCAA  GCATCCACCC  CTCTCCCCCA  ACTTCCCCCA  CGCTAAAAAA  AACAGAGGGA   618

GCCCACTCCT  ATGCCTCCCC  CTGCCATCCC  CCAGGAACTC  AGTTGTTCAG  TGCCCACTTC   678

TAC CCC AGC AAG CAG AAC TCA CTG CTC TGG AGA GCA  AAC  ACG  GAC  CGT     726
Tyr Pro Ser Lys Gln Asn Ser Leu Leu Trp Arg Ala  Asn  Thr  Asp  Arg
            20                  25                      30

GCC TTC CTC CAG GAT GGT TTC TCC TTG AGC AAC AAT TCT CTC CTG  GTC        774
Ala Phe Leu Gln Asp Gly Phe Ser Leu Ser Asn Asn Ser Leu Leu  Val
        35                  40                  45

TAGAAAAAAT  AATTGATTTC  AAGACCTTCT  CCCCATTCTG  CCTCCATTCT  GACCATTTCA   834

GGGGTCGTCA  CCACCTCTCC  TTTGGCCATT  CCAACAGCTC  AAGTCTTCCC  TGATCAAGTC   894

ACCGGAGCTT  TCAAAGAAGG  AATTCTAGGC  ATCCCAGGGG  ACCCACACCT  CCCTGAACCA   954
```

BILLING CODE 3510–16–C

(2) INFORMATION FOR SEQ ID NO: 2:
(i) SEQUENCE CHARACTERISTICS:
(A) LENGTH: 82 amino acids
(B) TYPE: amino acid
(C) TOPOLOGY: linear
(ii) MOLECULE TYPE: protein
(ix) FEATURE:
(A) NAME/KEY: signal sequence
(B) LOCATION: −34 to −1
(C) IDENTIFICATION METHOD: similarity to other signal sequences, hydrophobic
(D) OTHER INFORMATION: expresses protease
(x) PUBLICATION INFORMATION:
(A) AUTHORS: Doe, Joan X, Doe, John Q
(B) TITLE: Isolation and Characterization of a Gene Encoding a Protease from *Paramecium* sp.
(C) JOURNAL: Fictional Genes
(D) VOLUME: I
(E) ISSUE: 1
(F) PAGES: 1–20
(G) DATE: 02–MAR–1988
(H) RELEVANT RESIDUES IN SEQ ID NO:2: FROM -34 TO 48

BILLING CODE 3510–16–P

(xi) SEQUENCE DESCRIPTION: SEQ ID NO: 2:

```
Met Thr Pro Pro Glu Arg Leu Phe Leu Pro Arg Val Cys Gly Thr Thr
                -30                 -25                     -20

Leu His Leu Leu Leu Leu Gly Leu Leu Leu Val Leu Leu Pro Gly Ala
            -15                     -10                     -5

His Gly Leu Met His Leu Ala His Ser Asn Leu Lys Pro Ala Ala His
        1               5                   10

Leu Ile Tyr Pro Ser Lys Gln Asn Ser Leu Leu Trp Arg Ala Asn Thr
15                  20                  25                      30

Asp Arg Ala Phe Leu Gln Asp Gly Phe Ser Leu Ser Asn Asn Ser Leu
                35                  40                      45

Leu Val ]
```

BILLING CODE 3510–16–C

>
<100>
<110> Doe, Joan X, Doe, John Q
<120> Isolation and Characterization of a Gene Encoding a Protease from Paramecium sp.
<130> 2
<140>
<141> Smith and Jones
<142> 123 Main Street
<143> Smalltown
<144> Anystate
<145> USA
<146> 12345
<150>
<151> Floppy disk
<152> IBM PC compatible
<153> PC-DOS/MS-DOS
<154> PatentIn Release #2.00
<160>
<161> 09/999,999
<162> 28–FEB–1989
<170>
<171> PCT/US/88/99999
<172> 01–MAR–1988
<180>
<181> Smith, John A
<182> REGISTRATION NUMBER: 00001
<183> 01–0001
<190>
<191> (909) 999–0001
<192> (909) 999–0002
<200> 1
<210>
<211> 954 base pairs
<212> N
<214> L
<290>
<291> CDS
<292> join(275..373, 448..498, 679..774)
<290>
<291> mat__peptide
<292> join(451..498, 679..774)
<300>
<301> Doe, Joan X, Doe, John Q
<302> Isolation and Characterization of a Gene Encoding a Protease from Paramecium sp.
<303> Fictional Genes
<304> 1
<305> 1
<306> 1–20
<307> 02–MAR–1988
<308> FROM 1 TO 957
<400> 1

BILLING CODE 3510–16–P

atcgggatag tactggtcaa gaccggtgga
caccggttaa ccccggttaa gtaccggtta 60
taggccattt caggccaaat gtgcccaact
acgccaattg ttttgccaac ggccaacgtt 120
acgttcgtac gcacgtatgt acctaggtac
ttacggacgt gactacggac acttccgtac 180
gtacgtacgt ttacgtaccc atcccaacgt
aaccacagtg tggtcgcagt gtcccagtgt 240
acacagactg ccagacattc ttcacagaca cccc atg
aca cca cct gaa cgt 292
Met Thr Pro Pro Glu Arg
-30
ctc ttc ctc cca agg gtg tgt ggc acc acc cta
cac ctc ctc ctt ctg 340
Leu Phe Leu Pro Arg Val Cys Gly Thr
Thr Leu His Leu Leu Leu Leu
-25 -20 -15
ggg ctg ctg ctg gtt ctg ctg cct ggg gcc cat
gtgaggcagc aggagaatgg 393
Gly Leu Leu Leu Val Leu Leu Pro Gly
Ala His
-10 -5
ggtggctcag ccaaaccttg agccctagag
ccccccctcaa ctctgttctc ctag ggg 450
Gly
ctc atg cat ctt gcc cac agc aac ctc aaa cct
gct gct cac ctc att 498
Leu Met His Leu Ala His Ser Asn Leu
Lys Pro Ala Ala His Leu Ile
1 5 10 15
gtaaacatcc acctgacctc ccagacatgt
ccccaccagc tctcctccta cccctgcctc 558
aggaacccaa gcatccaccc ctctccccca
acttccccca cgctaaaaaa aacagaggga 618
gcccactcct atgcctcccc ctgccatccc
ccaggaactc agttgttcag tgcccacttc 678
tac ccc agc aag cag aac tca ctg ctc tgg aga
gca aac acg gac cgt 726
Tyr Pro Ser Lys Gln Asn Ser Leu Leu
Trp Arg Ala Asn Thr Asp Arg

20 25 30

gcc ttc ctc cag gat ggt ttc tcc ttg agc aac
aat tct ctc ctg gtc 774

Ala Phe Leu Gln Asp Gly Phe Ser Leu
Ser Asn Asn Ser Leu Leu Val

35 40 45

tagaaaaaat aattgatttc aagaccttct ccccattctg
cctccattct gaccatttca 834

ggggtcgtca ccacctctcc tttggccatt
ccaacagctc aagtcttccc tgatcaagtc 894

accggagctt tcaaagaagg aattctaggc
atcccagggg acccacacct ccctgaacca 954

BILLING CODE 3510–16–P

```
atcgggatag tactggtcaa gaccggtgga caccggttaa ccccggttaa gtaccggtta      60

taggccattt caggccaaat gtgcccaact acgccaattg ttttgccaac ggccaacgtt     120

acgttcgtac gcacgtatgt acctaggtac ttacggacgt gactacggac acttccgtac     180

gtacgtacgt ttacgtaccc atcccaacgt aaccacagtg tggtcgcagt gtcccagtgt     240

acacagactg ccagacattc ttcacagaca cccc atg aca cca cct gaa cgt         292
                                      Met Thr Pro Pro Glu Arg
                                                      -30

ctc ttc ctc cca agg gtg tgt ggc acc acc cta cac ctc ctc ctt ctg       340
Leu Phe Leu Pro Arg Val Cys Gly Thr Thr Leu His Leu Leu Leu Leu
            -25                 -20                 -15

ggg ctg ctg ctg gtt ctg ctg cct ggg gcc cat gtgaggcagc aggagaatgg     393
Gly Leu Leu Leu Val Leu Leu Pro Gly Ala His
        -10                 -5

ggtggctcag ccaaaccttg agccctagag ccccccctcaa ctctgttctc ctag ggg      450
                                                             Gly

ctc atg cat ctt gcc cac agc aac ctc aaa cct gct gct cac ctc att       498
Leu Met His Leu Ala His Ser Asn Leu Lys Pro Ala Ala His Leu Ile
  1               5                  10                  15

gtaaacatcc acctgacctc ccagacatgt ccccaccagc tctcctccta cccctgcctc     558

aggaacccaa gcatccaccc ctctccccca acttccccca cgctaaaaaa aacagaggga     618

gcccactcct atgcctcccc ctgccatccc ccaggaactc agttgttcag tgcccacttc     678

tac ccc agc aag cag aac tca ctg ctc tgg aga gca aac acg gac cgt       726
Tyr Pro Ser Lys Gln Asn Ser Leu Leu Trp Arg Ala Asn Thr Asp Arg
            20                  25                  30

gcc ttc ctc cag gat ggt ttc tcc ttg agc aac aat tct ctc ctg gtc       774
Ala Phe Leu Gln Asp Gly Phe Ser Leu Ser Asn Asn Ser Leu Leu Val
        35                  40                  45

tagaaaaaat aattgatttc aagaccttct ccccattctg cctccattct gaccatttca     834

ggggtcgtca ccacctctcc tttggccatt ccaacagctc aagtcttccc tgatcaagtc     894
```

BILLING CODE 3510–16–C

<200> 2

<210>

<211> 82 amino acids

<212> A

<214> L

<400> 2
Met Thr Pro Pro Glu Arg Leu Phe Leu
Pro Arg Val Cys Gly Thr Thr
-30 -25 -20
Leu His Leu Leu Leu Leu Gly Leu Leu
Leu Val Leu Leu Pro Gly Ala
-15 -10 -5
His Gly Leu Met His Leu Ala His Ser
Asn Leu Lys Pro Ala Ala His
1 5 10
Leu Ile Tyr Pro Ser Lys Gln Asn Ser Leu
Leu Trp Arg Ala Asn Thr
15 20 25 30
Asp Arg Ala Phe Leu Gln Asp Gly Phe
Ser Leu Ser Asn Asn Ser Leu
35 40 45
Leu Val <

BILLING CODE 3510–16–P

<200> 2

<210>

<211> 82 amino acids

<212> A

<214> L

<400> 2

Met Thr Pro Pro Glu Arg Leu Phe Leu Pro Arg Val Cys Gly Thr Thr
-30 -25 -20

Leu His Leu Leu Leu Leu Gly Leu Leu Leu Val Leu Leu Pro Gly Ala
-15 -10 -5

His Gly Leu Met His Leu Ala His Ser Asn Leu Lys Pro Ala Ala His
1 5 10

Leu Ile Tyr Pro Ser Lys Gln Asn Ser Leu Leu Trp Arg Ala Asn Thr
15 20 25 30

Asp Arg Ala Phe Leu Gln Asp Gly Phe Ser Leu Ser Asn Asn Ser Leu
35 40 45

Leu Val <

BILLING CODE 3510–16–C

9. Appendix B to Subpart G is proposed to be removed.

[Appendix B To Subpart G of Part 1—Headings For Information Items In § 1.823

(1) GENERAL INFORMATION:
(i) APPLICANT:
(ii) TITLE OF INVENTION:
(iii) NUMBER OF SEQUENCES:
(iv) CORRESPONDENCE ADDRESS:
(A) ADDRESSEE:
(B) STREET:
(C) CITY:
(D) STATE:
(E) COUNTRY:
(F) ZIP:
(v) COMPUTER READABLE FORM:
(A) MEDIUM TYPE:
(B) COMPUTER:
(C) OPERATING SYSTEM:

(D) SOFTWARE
(vi) CURRENT APPLICATION DATA:
(A) APPLICATION NUMBER:
(B) FILING DATE:
(C) CLASSIFICATION:
(vii) PRIOR APPLICATION DATA:
(A) APPLICATION NUMBER:
(B) FILING DATE:
(viii) ATTORNEY/AGENT INFORMATION:
(A) NAME:
(B) REGISTRATION NUMBER:
(C) REFERENCE/DOCKET NUMBER:
(ix) TELECOMMUNICATIONS INFORMATION:
(A) TELEPHONE:
(B) TELEFAX:
(C) TELEX:
(2) INFORMATION FOR SEQ ID NO: X:
(i) SEQUENCE CHARACTERISTICS:
(A) LENGTH:
(B) TYPE:
(C) STRANDEDNESS:
(D) TOPOLOGY:
(ii) MOLECULE TYPE:
—Genomic RNA;
—Genomic DNA;
—mRNA;
—tRNA;
—rRNA;
—snRNA;
—scRNA;
—preRNA;
—cDNA to genomic RNA;
—cDNA to mRNA;
—cDNA to tRNA;
—cDNA to rRNA;
—cDNA to snRNA;
—cDNA to scRNA;
—Other nucleic acid;
(A) DESCRIPTION:
—protein and
—peptide.
(iii) HYPOTHETICAL:
(iv) ANTI-SENSE:
(v) FRAGMENT TYPE:
(vi) ORIGINAL SOURCE:
(A) ORGANISM:
(B) STRAIN:
(C) INDIVIDUAL ISOLATE:
(D) DEVELOPMENTAL STAGE:
(E) HAPLOTYPE:
(F) TISSUE TYPE:
(G) CELL TYPE:
(H) CELL LINE:
(I) ORGANELLE:
(vii) IMMEDIATE SOURCE:
(A) LIBRARY:
(B) CLONE:
(viii) POSITION IN GENOME:
(A) CHROMOSOME/SEGMENT:
(B) MAP POSITION:
(C) UNITS:
(ix) FEATURE:
(A) NAME/KEY:
(B) LOCATION:
(C) IDENTIFICATION METHOD:
(D) OTHER INFORMATION:
(x) PUBLICATION INFORMATION:
(A) AUTHORS:
(B) TITLE:
(C) JOURNAL:
(D) VOLUME:
(E) ISSUE:
(F) PAGES:
(G) DATE:
(H) DOCUMENT NUMBER:
(I) FILING DATES:
(J) PUBLICATION DATE:
(K) RELEVANT RESIDUES:
(xi) SEQUENCE DESCRIPTION: SEQ ID NO:X:]

Dated: September 23, 1996.

Bruce A. Lehman,

Assistant Secretary of Commerce and Commissioner of Patents and Trademarks.

[FR Doc. 96–25074 Filed 10–3–96; 8:45 am]

BILLING CODE 3510–16–P

ENVIRONMENTAL PROTECTION AGENCY

40 CFR Part 281

[FRL–5620–3]

Alabama; Approval of State Underground Storage Tank Program

AGENCY: Environmental Protection Agency.

ACTION: Notice of tentative determination on application of State of Alabama for final approval, public hearing and public comment period.

SUMMARY: The State of Alabama has applied for approval of its underground storage tank program for petroleum and hazardous substances under Subtitle I of the Resource Conservation and Recovery Act (RCRA). The Environmental Protection Agency (EPA) has reviewed Alabama's application and has made the tentative decision that Alabama's underground storage tank program for petroleum and hazardous substances satisfies all of the requirements necessary to qualify for approval. Alabama's application for approval is available for public review and comment. A public hearing will be held to solicit comments on the application, unless insufficient public interest is expressed.

DATES: A public hearing is scheduled for November 14, 1996, unless insufficient public interest is expressed in holding a hearing. EPA reserves the right to cancel the public hearing if sufficient public interest is not communicated to EPA in writing by November 4, 1996. EPA will determine by November 8, 1996, whether there is significant interest to hold the public hearing. The State of Alabama will participate in the public hearing held by EPA on this subject. Written comments on Alabama's approval application, as well as requests to present oral testimony, must be received by the close of business on November 4, 1996.

ADDRESSES: Copies of Alabama's approval application are available during the hours of 9:00 am to 5:00 pm at the following addresses for inspection and copying:

Alabama Department of Environmental Management, Ground Water Branch, 1751 W. L. Dickinson Drive, Montgomery, AL 36130, phone: (334) 270–5655.

U.S. EPA Docket Clerk, Office of Underground Storage Tanks, 1235 Jefferson Davis Highway, Arlington, VA 22202, phone: (703) 603–9231; and,

U.S. EPA Region 4, Underground Storage Tank Section, Atlanta Federal Center, 15th Floor, 100 Alabama Street SW., Atlanta, GA 30303, phone: (404) 562–9438.

Written comments should be sent to Mr. John K. Mason, Chief of Underground Storage Tank Section, U.S. EPA Region 4, 100 Alabama Street S.W., Atlanta, Georgia 30303, telephone (404) 562–9438.

Unless insufficient public interest is expressed, EPA will hold a public hearing on the State of Alabama's application for program approval on November 14, 1996, at 7:00 pm at the Alabama Department of Environmental Management Hearing Room, 1751 W.L. Dickinson Drive, Montgomery, Alabama 36109–2608. Anyone who wishes to learn whether or not the public hearing on the State's application has been cancelled should telephone the following contacts after November 8, 1996:

Mr. John K. Mason, Chief, Underground Storage Tank Section, U.S. EPA Region 4, 100 Alabama Street SW., Atlanta, GA 30303, phone: (404) 562–9438, or

Ms. Sonja Massey, Chief, Ground Water Branch, Alabama Department of Environmental Management, 1751 Congressman W.L. Dickinson Drive, Montgomery, AL 36130, phone: (334) 270–5655.

FOR FURTHER INFORMATION CONTACT: Mr. John K. Mason, Chief, Underground Storage Tank Section, U.S. EPA Region 4, 100 Alabama Street SW., Atlanta, GA 30303, phone: (404) 562–9438.

SUPPLEMENTARY INFORMATION:

A. Background

Section 9004 of the Resource Conservation and Recovery Act (RCRA) authorizes EPA to approve State underground storage tank programs to operate in the State in lieu of the Federal underground storage tank (UST) program. Program approval may be granted by EPA pursuant to RCRA Section 9004(b), if the Agency finds that the State program is ''no less stringent'' than the Federal program for the seven elements set forth at RCRA Section

9004(a)(1) through (7); includes the notification requirements of RCRA Section 9004(a)(8); and provides for adequate enforcement of compliance with UST standards of RCRA Section 9004(a).

B. Alabama

The State of Alabama submitted their draft state program approval application to EPA by letter dated April 29, 1992. After reviewing the package, EPA submitted comments to the state for review. Alabama submitted their complete state program approval application for EPA's tentative approval on July 26, 1994.

On April 5, 1989, Alabama adopted UST program regulations. Prior to the adoption of the regulations, Alabama solicited public comment and held a public hearing on the draft UST program regulations. EPA has reviewed Alabama's application, and has tentatively determined that the State's UST program for petroleum and hazardous substances meets all of the requirements necessary to qualify for final approval.

EPA will hold a public hearing on its tentative decision on November 14, 1996, unless insufficient public interest is expressed. The public may also submit written comments on EPA's tentative determination until November 4, 1996. Copies of Alabama's application are available for inspection and copying at the location indicated in the **ADDRESSES** section of this notice.

EPA will consider all public comments on its tentative determination received at the hearing, or received in writing during the public comment period. Issues raised by those comments may be the basis for a decision to deny final approval to Alabama. EPA expects to make a final decision on whether or not to approve Alabama's program by January 14, 1996, and will give notice of it in the Federal Register. The notice will include a *summary* of the reasons for the final determination and a response to all major comments.

Compliance With Executive Order 12866

The Office of Management and Budget has exempted this rule from the requirements of section 6 of Executive Order 12866.

Unfunded Mandates Reform Act

Title II of the Unfunded Mandates Reform Act of 1995 (UMRA), Pub. L. 104–4, establishes requirements for Federal agencies to assess the effects of their regulatory actions on State, local, and tribal governments and the private sector. Under section 202 of the UMRA, EPA generally must prepare a written statement, including a cost-benefit analysis, for proposed and final rules with ''Federal mandates'' that may result in expenditures to State, local, and tribal governments, in the aggregate, or to the private sector, of $100 million or more in any one year. Before promulgating an EPA rule for which a written statement is needed, section 205 of the UMRA generally requires EPA to identify and consider a reasonable number of regulatory alternatives and adopt the least costly, most cost-effective or least burdensome alternative that achieves the objectives of the rule. The provisions of section 205 do not apply when they are inconsistent with applicable law. Moreover, section 205 allows EPA to adopt an alternative other than the least costly, most cost-effective or least burdensome alternative if the Administrator publishes with the final rule an explanation why that alternative was not adopted. Before EPA establishes any regulatory requirements that may significantly or uniquely affect small governments, including tribal governments, it must have developed under section 203 of the UMRA a small government agency plan. The plan must provide for notifying potentially affected small governments, enabling officials of affected small governments to have meaningful and timely input in the development of EPA regulatory proposals with significant Federal intergovernmental mandates, and informing, educating, and advising small governments on compliance with the regulatory requirements.

Todays's rule contains no Federal mandates for State, local or tribal governments or the private sector. The Act excludes from the definition of a ''Federal mandate'' duties that arise from participation in a voluntary Federal program, except in certain cases where a ''federal intergovernmental mandate'' affects an annual federal entitlement program of $500 million or more that are not applicable here. Alabama's request for approval of an underground storage tank (UST) program is voluntary and imposes no Federal mandate within the meaning of the Act. Rather, by having its UST program approved, the State will gain the authority to implement the federally approved program within its jurisdiction, in lieu of EPA, thereby eliminating duplicative State and Federal requirements. If a State chooses not to seek authorization for administration of an UST program under RCRA Subtitle I, RCRA underground storage tank regulation is left to EPA.

In any event, EPA has determined that this rule does not contain a Federal mandate that may result in expenditures of $100 million or more for State, local, and tribal governments in the aggregate, or the private sector in any one year. EPA does not anticipate that the approval of Alabama's UST program referenced in today's notice will result in annual costs of $100 million or more. EPA's approval of state programs generally may reduce, not increase, compliance costs for the private sector since the State, by virtue of the approval, may now administer the program in lieu of EPA and exercise primary enforcement responsibility. Hence, owners and operators of underground storage tanks (USTs) generally no longer face dual Federal and State compliance requirements, thereby reducing overall compliance costs. Thus, today's rule is not subject to the requirements of sections 202 and 205 of the UMRA.

EPA has determined that this rule contains no regulatory requirements that might significantly or uniquely affect small governments. The Agency recognizes that small governments may own and/or operate USTs that will become subject to the requirements of an approved State UST tank program. However, such small governments which own and/or operate USTs are already subject to the requirements in 40 CFR part 280 and are not subject to any additional significant or unique requirements by virtue of this program approval. Once EPA authorizes a State to administer its own UST program and any revisions to that program, these same small governments will be able to own and operate their USTs under the approved State program, in lieu of the Federal program.

Certification Under the Regulatory Flexibility Act

EPA has determined that this authorization will not have a significant economic impact on a substantial number of small entities. EPA recognizes that small entities may own and/or operate USTs that will become subject to the requirements of an approved state UST program. However, since such small entities which own and/or operate USTs are already subject to the requirements in 40 CFR Part 280, this authorization does not impose any additional burdens on these small entities. This is because EPA's authorization would result in an administrative change (i.e., whether EPA or the state administers the UST program in that state, rather than result in a change in the substantive requirements imposed on small

entities). Once EPA authorizes a state to administer its own UST program and any revisions to that program, these same small entities will be able to own and operate their USTs under the approved state program, in lieu of the federal program. Moreover, this authorization, in approving a state program to operate in lieu of the federal program, eliminates duplicative requirements for owners and operators of USTs in that particular state.

Therefore, EPA provides the following certification under the Regulatory Flexibility Act, as amended by the Small Business Regulatory Enforcement Fairness Act. Pursuant to the provision at 5 U.S.C. 605(b), I hereby certify that this authorization will not have a significant economic impact on a substantial number of small entities. This authorization effectively approves the Alabama program to operate in lieu of the federal program, thereby eliminating duplicative requirements for owners and operators of USTs in the state. It does not impose any new burdens on small entities. This rule, therefore, does not require a regulatory flexibility analysis.

List of Subjects in 40 CFR Part 281

Environmental protection, administrative practice and procedure, Hazardous materials, State program approval, and Underground storage tanks.

Authority: This notice is issued under the authority of Section 9004 of the Solid Waste Disposal Act as amended 42 U.S.C. 6912(a), 6926, 6974(b).

Dated: September 23, 1996.

A. Stanley Meiburg,

Acting Regional Administrator.

[FR Doc. 96–25107 Filed 10–3–96; 8:45 am]

BILLING CODE 6560–50–P

40 CFR Part 52

[CO48–1–7008b & CO–001–0005b; FRL–5607–5]

Clean Air Act Approval and Promulgation of PM_{10} State Implementation Plan for Colorado; Telluride; Revisions to the Maintenance Demonstration

AGENCY: Environmental Protection Agency (EPA).

ACTION: Proposed rule.

SUMMARY: EPA proposes to approve the State implementation plan (SIP) revisions for Telluride as submitted by the Colorado Governor with a letter dated April 22, 1996. EPA proposes that the April 22, 1996 submittal now satisfies the State's April 21, 1994 commitment to adopt additional control measures in Telluride as necessary to demonstrate maintenance of the National Ambient Air Quality Standards (NAAQS) through December 31, 1997, for particulate matter with an aerodynamic diameter less than or equal to a nominal 10 micrometers (PM_{10}). Based on that commitment, EPA conditionally approved the quantitative milestones element of the Telluride PM_{10} SIP on September 19, 1994. The April 22, 1996 submittal incorporates new street sanding requirements and demonstrates maintenance of the standard through 1997. EPA proposes to approve these revisions, and therefore, convert its September 19, 1994 conditional approval to a full approval.

In the Final Rules Section of this Federal Register, EPA is approving the State's SIP revisions as a direct final rule without prior proposal because the Agency views this as a noncontroversial revision and anticipates no adverse comments. A detailed rationale for EPA's actions is set forth in the direct final rule. If no adverse comments are received in response to this proposed rule, no further activity is contemplated and the direct final rule will become effective. If EPA receives adverse comments, the direct final rule will be withdrawn and all public comments received will be addressed in a subsequent final rule based on this proposed rule. EPA will not institute a second comment period on this action. Any parties interested in commenting on this document should do so at this time.

DATES: Comments on this proposed rule must be received in writing by November 4, 1996.

ADDRESSES: Written comments on this action should be addressed to Richard R. Long, 8P2–A, at the EPA Regional Office listed below. Copies of the State's submittal and documents relevant to this proposed rule are available for inspection during normal business hours at the following locations: Air Program, Environmental Protection Agency, Region VIII, 999 18th Street, suite 500, Denver, Colorado 80202–2405; and Colorado Department of Health, Air Pollution Control Division, 4300 Cherry Creek Drive South, Denver, Colorado 80222–1530.

FOR FURTHER INFORMATION CONTACT: Amy Platt, Air Program, EPA, Region VIII, at (303) 312–6449.

SUPPLEMENTARY INFORMATION: See the information provided in the Direct Final action which is located in the Rules Section of this Federal Register.

Dated: August 29, 1996.

Patricia D. Hull,

Regional Administrator.

[FR Doc. 96–25466 Filed 10–3–96; 8:45 am]

BILLING CODE 6560–50–P

FEDERAL COMMUNICATIONS COMMISSION

47 CFR Part 90

[WT Docket No. 96–199; FCC 96–383]

Finder's Preference Program in the 220–222 MHz Band for Private Land Mobile Radio Services

AGENCY: Federal Communications Commission.

ACTION: Proposed rule.

SUMMARY: This action proposes to amend the Commission's Rules regarding the land mobile radio service to eliminate the finder's preference program in the 220–222 MHz band in light of our proposals to implement a new licensing approach for this band. It is necessary because pending proposals for geographic area licensing in this band appear incompatible with the approach of the finder's preference program. The effect of the action will be to determine the usefulness and benefits of continuing the finder's preference program.

DATES: Comment are to be filed on or before November 18, 1996; reply comment are to be filed on or before December 3, 1996.

FOR FURTHER INFORMATION CONTACT: John Borkowski, Federal Communications Commission, Wireless Telecommunications Bureau, Washington, D. C. 20554, (202) 418–0626.

SUPPLEMENTARY INFORMATION: This is a summary of the Commission's Notice of Proposed Rule Making, adopted September 17, 1996, and released September 27, 1996. The complete text of this Commission action is available for inspection and copying during normal business hours in the FCC Reference Center (Room 239), 1919 M Street, N.W., Washington, D. C., 20554. The complete text of this Notice of Proposed Rule Making may also be purchased from the Commission's copy contractor, International Transcription Services, Inc. (ITS, Inc.), 2100 Street, N. W., Suite 140, Washington, D. C. 20037, Telephone number (202) 857–3800.

SUMMARY OF NOTICE OF PROPOSED RULE MAKING:

1. This Notice of Proposed Rule Making (NPRM) proposes to amend Part

90 of our Rules to eliminate the finder's preference program in the 220–222 MHz band in light of our proposals to implement a new licensing approach for this band. The NPRM also seeks comment on the utility of the finder's preference program for private land mobile radio (PLMR) services authorized for the 470–512 MHz, 800 MHz and 900 MHz bands.

2. Under Section 90.173(k) of our Rules, persons may apply for a finder's preference for channels assigned on an exclusive basis in the 220–222 MHz, 470–512 MHz, 800 MHz and 900 MHz frequency bands by submitting information that leads to the Commission's recovery of unused channels in these bands. The NPRM proposes to eliminate the finder's preference program in the 220–222 MHz band in light of our proposals in PR Docket No. 89–552 to implement geographic area licensing and use competitive bidding to choose among mutually exclusive initial applications. This is consistent with our decision to eliminate the finder's preference program in the 800 MHz and 900 MHz Specialized Mobile Radio (SMR) services when we adopted a geographic area licensing approach and competitive bidding procedures for those services. The NPRM also seeks comment on the usefulness and benefits of continuing the finder's preference program for the PLMR services in the 470–512 MHz, 800 MHz, and 900 MHz bands.

3. In order to avoid undermining the regulatory framework that we may adopt for the 220–222 MHz band, we have decided to delay processing any finder's preference requests that may be filed in this band pending final action in this proceeding. Continued processing of site-based requests could frustrate the intent of our geographic area licensing proposal by increasing the encumbrances on this spectrum with site-based licensees, thus reducing the flexibility of the geographic-based licensees and thereby impairing their ability to best serve the public. Accordingly, our decision to delay processing of these requests serves the public interest. Moreover, this decision is procedural in nature, and thus not subject to the notice and comment and effective date requirements of the Administrative Procedure Act (APA), 5 U.S.C. 553(b)(A), (d). We also observe that our ongoing compliance review procedures will ensure that this decision does not compromise the public interest in any way.

4. This Notice of Proposed Rule Making is issued under the authority contained in 47 U.S.C. 154(i) and 303(r). Pursuant to applicable procedures set forth in Sections 1.415 and 1.419 of the Commission's Rules, 47 CFR 1.415 and 1.419, interested parties may file comments on or before November 18, 1996, and reply comments on or before December 3, 1996. To file formally in this proceeding, you must file an original and four copies of all comments, reply comments, and supporting comments. If you want each Commissioner to receive a personal copy of your comments, you must file an original plus nine copies. You must send comments and reply comments to the Office of the Secretary, Federal Communications Commission, Washington, D.C. 20554. You may also file informal comments by electronic mail. You should address informal comments to smagnott@fcc.gov. You must put the docket number of this proceeding on the subject line (*see* the caption at the beginning of this NPRM). You must also include your full name and Postal Service mailing address in the text of the message. Formal and informal comments and reply comments will be available for public inspection during regular business hours in the FCC Reference Center, Room 239, Federal Communications Commission, 1919 M Street, N.W., Washington D.C. 20554.

List of Subjects in 47 CFR Part 90

Finder's preference, Radio

Federal Communications Commission.

Shirley S. Suggs,

Chief, Publications Branch.

Proposed Rules

Part 90 of Title 47 of the Code of Federal Regulations is proposed to be amended as follows:

PART 90—PRIVATE LAND MOBILE RADIO SERVICES

1. The authority citation for Part 90 continues to read as follows:

Authority: Secs. 4, 303, and 332, 48 Stat. 1066, 1082, as amended; 47 U.S.C. 154, 303, and 332, unless otherwise noted.

§ 90.173 [Amended]

Section 90.173 is amended by removing the words ''220–222 MHz,'' in the paragraph (k) introductory text.

[FR Doc. 96–25235 Filed 10–3–96; 8:45 am]

BILLING CODE 6712–01–P

DEPARTMENT OF THE INTERIOR

Fish and Wildlife Service

50 CFR Part 17

RIN 1018–AD52

Endangered and Threatened Wildlife and Plants; Reopening of Comment Period on Proposed Threatened Status for the Guajón

AGENCY: Fish and Wildlife Service, Interior

ACTION: Proposed rule, reopening of comment period.

SUMMARY: The Service provides notice that the comment period is reopening on a proposal to list the guajón (*Eleutherodactylus cooki*) as threatened, pursuant to the Endangered Species Act (Act) of 1973, as amended. The Service is reopening the comment period to allow members of the public to submit comments on this proposal.

DATES: The comment period on this proposal is extended until November 4, 1996.

ADDRESSES: Written comments and materials concerning this proposal should be sent to the Field Supervisor, Boquerón Field Office, U.S. Fish and Wildlife Service, P.O. Box 491, Boquerón, Puerto Rico 00622. Comments and materials received will be available for public inspection, by appointment, during normal business hours at this office.

FOR FURTHER INFORMATION CONTACT: Ms. Susan Silander at the Boquerón Field Office address (809/851–7297).

SUPPLEMENTARY INFORMATION:

Background

On October 2, 1995, the Service proposed to add the guajón (*Eleutherodactylus cooki*) to the list of endangered and threatened species. At that time the guajón, a relatively large frog, was reported from its historical localities in the municipalities of Yabucoa and San Lorenzo. It is endemic to Puerto Rico and restricted in range to the southeastern part of the island. Since the closing of the comment period, the guajón has been reported from additional municipalities, including Humacao and Las Piedras. In addition, information on the reproductive biology and population genetics of the species has been published and additional research is ongoing.

A moratorium on listing actions (Public Law 104–6) took effect April 10, 1995, and prevented the Service from making a final decision on this proposal

by the October 1996 administrative deadline. The moratorium was lifted on April 26, 1996, when the appropriation for the Department of the Interior for the remainder of fiscal year 1996 was enacted into law. In a Federal Register document published on May 16, 1996 (61 FR 24722), the Service outlined in detail the history of the moratorium and indicated the priorities it would follow in eliminating the listing program backlog resulting from the moratorium. Preparation of the final rule for this proposed species is considered a Tier 2 priority—processing final decisions on proposed listings. For more information on the moratorium and the priority for backlogged listing actions, refer to the May 16, 1996, Federal Register notice.

The Service does not believe that the new distributional information has changed the status of the species. However, we are reopening the comment period on the proposed rule to solicit comments on this new information and request any additional information on scientific studies conducted since the comment period last closed on December 1, 1995. The Service hereby announces reopening of the comment period until November 4, 1996.

Author

The primary author of this notice is Susan R. Silander, Boquerón Field Office, U.S. Fish and Wildlife Service, Box 491, Boquerón, Puerto Rico, 00622 (787/851–7297).

Authority

The authority for this action is the Endangered Species Act of 1973 (16 U.S.C. 1531 *et seq.*).

Dated: September 27, 1996

Noreen K. Clough,

Regional Director, Southeast Region, Fish and Wildlife Service.

[FR Doc. 96–25476 Filed 10–3–96; 8:45 am]

BILLING CODE 4310–55–P

Notices

Federal Register
Vol. 61, No. 194
Friday, October 4, 1996

This section of the FEDERAL REGISTER contains documents other than rules or proposed rules that are applicable to the public. Notices of hearings and investigations, committee meetings, agency decisions and rulings, delegations of authority, filing of petitions and applications and agency statements of organization and functions are examples of documents appearing in this section.

DEPARTMENT OF AGRICULTURE

Commodity Credit Corporation

RIN 0551–AA24

Market Access Program FY 1997 Funds Availability

AGENCY: Commodity Credit Corporation, USDA.

ACTION: Notice.

SUMMARY: This notice announces the availability of funds for the Fiscal Year 1997 Market Access Program (MAP).

DATES: All applications must be received by 5:00 p.m. Eastern Standard Time, Monday, December 16, 1996.

FOR FURTHER INFORMATION CONTACT: Marketing Operations Staff, Foreign Agricultural Service, U.S. Department of Agriculture, 1400 Independence Ave., SW., Washington, DC 20250, (202) 720–4327.

SUPPLEMENTARY INFORMATION:

Introduction

The Commodity Credit Corporation (CCC) announces that applications are being accepted for participation in the Fiscal Year 1997 MAP. The MAP is designed to encourage the development, maintenance, and expansion of commercial export markets for U.S. agricultural commodities through cost-share assistance to eligible trade organizations that implement a foreign market development program. Financial assistance under this program will be made available on a competitive basis and applications will be reviewed against the evaluation criteria contained in this announcement. The MAP is administered by personnel of the Foreign Agricultural Service (FAS).

In an effort to improve and simplify the administration of the MAP, CCC published a notice Federal Register on July 1, 1996, requesting comments on the methodology and criteria used by CCC to evaluate and allocate funding among applicants. CCC received 18 letters from U.S. trade associations, cooperatives, regional trade associations and private firms in response to the notice suggesting various evaluation criteria. CCC was not able to evaluate many of these comments because the comments did not explain the basis for the suggestion or otherwise indicate how the criteria should be used to evaluate applications. However, there were two recurring suggestions which CCC has adopted and incorporated into the allocation process. First, the export performance criteria will not be based on a single year, but rather a 3-year average across all targeted markets. This will give a more accurate picture of exports by avoiding sole reliance on what may be a short-term market fluctuation. Second, for past participants, CCC will consider the 4-year average of a participant's past contributions to the program using the actual figures reported in the participant's end-of-year reports for 1994 and 1995 together with the minimum contribution specified in the participant's applications for 1996 and 1997.

Authority

This program is authorized under section 203 of the Agricultural Trade Act of 1978, as amended. Program regulations are set forth in 7 CFR part 1485.

Eligible Applicants

To participate in the MAP, an applicant must be:

—A nonprofit U.S. agricultural trade organization;
—A nonprofit state regional trade group;
—A U.S. agricultural cooperative;
—A State agency; or
—A U.S. commercial entity that is a small-sized entity (other than a cooperative or producer association).

Available Funds

$90 million of cost-share assistance may be obligated under this program announcement to eligible applicants.

Application Process

In order to be considered, an application must contain the information required by the MAP regulations set forth in 7 CFR 1485. Incomplete applications and applications that do not otherwise conform to this announcement will not be accepted for review. All applications must be submitted in triplicate form (an original and two copies). Handbooks are available to assist applicants in developing an application. To receive an application handbook, contact the Marketing Operations Staff at (202) 720–4327.

Review Process

Following is a description of CCC's process for reviewing applications and the criteria for allocating available funds.

(1) Phase I—Sufficiency Committee Review

Applications received by the closing date will be reviewed by FAS to determine the eligibility of the applicants and the completeness of the applications. These requirements appear at § 1485.12 and § 1485.13 of the MAP regulations.

(2) Phase II—FAS Divisional Review

Applications which meet the application procedures will then be further evaluated by the applicable FAS Commodity Division. The Divisions will recommend funding levels for each applicant based on a review of the applications and strategic plans against the criteria listed in § 1485.14 of the MAP regulations. The purpose of this review is to identify meritorious proposals and to suggest an appropriate funding level for each application based upon these criteria.

(3) Phase III—Competitive Review

Meritorious applications will then be passed on to the office of the Deputy Administrator, Commodity and Marketing Programs, for the purpose of allocating available funds among the applicants. Applications which pass the Divisional Review will compete for funds on the basis of the following evaluation criteria (the number in parenthesis represents a percentage weight factor):

(a) Applicant's Contribution Level (40)

- A 4-year average of an applicant's contributions for years 1994, 1995, 1996, and 1997 (actual contributions will be used for 1994 and 1995 as reported in the applicant's end-of-year report and the minimum required contributions will be used for 1996 and 1997 as specified in the applications) compared to

• A 4-year average of an applicant's funding level for years 1994, 1995, 1996 and 1997 (actual expenditures will be used for 1994 and 1995, the program budget ceiling will be used for 1996, and the applicant's requested amount will be used for 1997);

(b) Past Performance (30)

• A 3-year average of the value of exports across targeted markets for years 1994, 1995 and 1996 compared to

• A 2-year average of an applicant's MAP funding level using 1995 and 1996 budget ceilings plus, for those groups participating in the Cooperator program, a 2-year average of FMD funding levels using 1995 and 1996 base budgets;

(c) Projected Export Goals (15)

• The total dollar value of projected exports for 1997 across all targeted markets compared to

• The applicant's requested funding level;

(d) Accuracy of Past Projections (15)

• Actual exports for 1995 as reported in the 1997 MAP application compared to

• Past projections of exports for 1995 as specified in the 1995 MAP application.

The Commodity Divisions' recommended program levels for each participant are converted to a percent of the total MAP funds available and multiplied by the total weight factor as described above to determine the amount of funds allocated to each applicant.

Closing Date for Applications

All applications must be received by 5:00 p.m. Eastern Standard Time, Monday, December 16, 1996, at the following address:

Hand Delivery: U.S. Department of Agriculture, Foreign Agricultural Service, Marketing Operations Staff, Room 4932–S, 14th and Independence Avenue, S.W., Washington, D.C. 20250–1042.

Postal Delivery: Marketing Operations Staff, STOP 1042, 1400 Independence Ave., SW, Washington, D.C. 20250–1042.

Dated: October 1, 1996.

August Schumacher,

Administrator, Foreign Agricultural Service, and Vice President, Commodity Credit Corporation.

[FR Doc. 96–25521 Filed 10–3–96; 8:45 am]

BILLING CODE 3410–10–M

COMMITTEE FOR PURCHASE FROM PEOPLE WHO ARE BLIND OR SEVERELY DISABLED

Procurement List, Proposed Additions

AGENCY: Committee for Purchase From People Who Are blind or Severely Disabled.

ACTION: Proposed additions to Procurement List.

SUMMARY: The Committee has received proposals to add to the Procurement List commodities and services to be furnished by nonprofit agencies employing persons who are blind or have other severe disabilities.

COMMENTS MUST BE RECEIVED ON OR BEFORE: November 4, 1996.

ADDRESSES: Committee for Purchase From People Who Are Blind or Severely Disabled, Crystal Square 3, Suit 403, 1735 Jefferson Davis Highway, Arlington, Virginia 22202–3461.

FOR FURTHER INFORMATION CONTACT: Beverely Milkman (703) 603–7740.

SUPPLEMENTARY INFORMATION: This notice is published pursuant to 41 U.S.C. 47(a)(2) and 41 CFR 51–2.3. Its purpose is to provide interested persons an opportunity to submit comments on the possible impact of the proposed actions.

If the Committee approves the proposed additions, all entities of the Federal Government (except as otherwise indicated) will be required to procure the commodities and services listed below from nonprofit agencies employing persons who are blind or have other severe disabilities. I certify that the following action will not have a significant impact on a substantial number of small entities. The major factors considered for this certification were:

1. The action will not result in any additional reporting, recordkeeping or other compliance requirements for small entities other than the small organizations that will furnish the commodities and services to the Government.

2. The action does not appear to have a severe economic impact on current contractors for the commodities and services.

3. The action will result in authorizing small entities to furnish the commodities and services to the Government.

4. There are no known regulatory alternatives which would accomplish the objectives of the Javits-Wagner-O'Day Act (41 U.S.C. 46–48c) in connection with the commodities and services proposed for addition to the Procurement List. Comments on this certification are invited. Commenters should identify the statement(s) underlying the certification on which they are providing additional information.

The following commodities and services have been proposed for addition to Procurement List for production by the nonprofit agencies listed:

Commodities

EMM Tray, Plastic
7240–00–NSH–0001
(50% of the U.S. Postal Service requirements)
NPA: Minnesota Diversified Industries, Inc., St. Paul, Minnesota at its facility in Hibbing, Minnesota

EMM Sleeve, Fiberboard
7240–00–NSH–0002
(50% of the U.S. Postal Service requirements)
NPA: Minnesota Diversified Industries, Inc., St. Paul, Minnesota at its facility in Hibbing, Minnesota

Paper, Xerographic
7530–01–147–6814
7530–01–147–6816
7530–01–147–6818
7530–01–156–9775
7530–01–157–1015
NPA: Louisiana Association for the Blind, Shreveport, Louisiana

Services

Janitorial/Custodial
Kilauea Armed Forces Recreation Center
Island of Hawaii
NPA: The ARC of Hilo, Hilo, Hawaii

Janitorial/Grounds Maintenance
U.S. Army Reserve Center
Hilo, Hawaii
NPA: The ARC of Hilo, Hilo, Hawaii

Beverly L. Milkman,

Executive Director.

[FR Doc. 96–25528 Filed 10–3–96; 8:45 am]

BILLING CODE 6353–01–M

Procurement List Additions

AGENCY: Committee for Purchase From People Who Are Blind or Severely Disabled.

ACTION: Additions to the Procurement List.

SUMMARY: This action adds to the Procurement List commodities and services to be furnished by nonprofit agencies employing persons who are blind or have other severe disabilities.

EFFECTIVE DATE: November 4, 1996.

ADDRESSES: Committee for Purchase From People Who Are Blind or Severely Disabled, Crystal Square 3, Suite 403, 1735 Jefferson Davis Highway, Arlington, Virginia 22202–3461.

FOR FURTHER INFORMATION CONTACT: Beverly Milkman (703) 603–7740.

SUPPLEMENTARY INFORMATION: On May 17, July 8, August 2 and 9, 1996, the Committee for Purchase From People Who Are Blind or Severely Disabled published notices (61 F.R. 24941, 35710, 40395 and 41570) or proposed additions to the Procurement List.

After consideration of the material presented to it concerning capability of qualified nonprofit agencies to provide the commodities and services and impact of the additions on the current or most recent contractors, the Committee has determined that the commodities and services listed below are suitable for procurement by the Federal Government under 41 U.S.C. 46–48c and 41 CFR 51–2.4.

I certify that the following action will not have a significant impact on a substantial number of small entities. The major factors considered for this certification were;

1. The action will not result in any additional reporting, recordkeeping or other compliance requirements for small entities other than the small organizations that will furnish the commodities and services to the Government.

2. The action will not have a severe economic impact on current contractors for the commodities and services.

3. The action will result in authorizing small entities to furnish the commodities and services to the Government.

4. There are no known regulatory alternatives which would accomplish the objectives of the Javits-Wagner-O'Day Act (41 U.S.C. 46–48c) in connection with the commodities and services proposed for addition to the Procurement List.

Accordingly, the following commodities and services are hereby added to the Procurement List:

Commodities

Easel, Display and Training
7520–01–424–4867
7520–01–424–4845

Services

Disposal Support Services
Eglin Air Force Base, Florida
Food Service Attendant
U.S. Coast Guard
Haley Hall Dining Facility, Building 560
Petaluma, California
Grounds Maintenance
Presidio of Monterey
Monterey, California
Janitorial/Custodial
Caven Point USARC
Jersey City, New Jersey

This action does not affect current contracts awarded prior to the effective date of this addition or options that may be exercised under those contracts.

Beverly L. Milkman,

Executive Director.

[FR Doc. 96–25529 Filed 10–3–96; 8:45 am]

BILLING CODE 6353–01–M

Procurement List; Proposed Additions

AGENCY: Committee for Purchase From People Who Are Blind or Severely Disabled.

ACTION: Proposed additions to Procurement List.

SUMMARY: The Committee has received proposals to add to the Procurement List commodities to be furnished by nonprofit agencies employing persons who are blind or have other severe disabilities.

COMMENTS MUST BE RECEIVED ON OR BEFORE: November 4, 1996.

ADDRESS: Committee for Purchase From People Who Are Blind or Severely Disabled, Crystal Square 3, Suite 403, 1735 Jefferson Davis Highway, Arlington, Virginia 22202–3461.

FOR FURTHER INFORMATION CONTACT: Beverly Milkman (703) 603–7740.

SUPPLEMENTARY INFORMATION: This notice is published pursuant to 41 U.S.C. 47(a)(2) and 41 CFR 51–2.3. Its purpose is to provide interested persons an opportunity to submit comments on the possible impact of the proposed actions.

If the Committee approves the proposed additions, all entities of the Federal Government (except as otherwise indicated) will be required to procure the commodities listed below from nonprofit agencies employing persons who are blind or have other severe disabilities.

I certify that the following action will not have a significant impact on a substantial number of small entities. The major factors considered for this certification were:

1. The action will not result in any additional reporting, recordkeeping or other compliance requirements for small entities other than the small organizations that will furnish the commodities to the Government.

2. The action will result in authorizing small entities to furnish the commodities to the Government.

3. There are no known regulatory alternatives which would accomplish the objectives of the Javits-Wagner-O'Day Act (41 U.S.C. 46–48c) in connection with the commodities proposed for addition to the Procurement List.

Comments on this certification are invited. Commenters should identify the statement(s) underlying the certification on which they are providing additional information.

The following commodities have been proposed for addition to the Procurement List for production by the nonprofit agencies listed:

Cap, Garrison, Army, Enlisted
8405–01–334–1493 thru –1505
(50% of the Government's requirement)
NPA: Goodwill Industries of South Florida, Inc., Miami, Florida

Beverly L. Milkman,

Executive Director.

[FR Doc. 96–25551 Filed 10–3–96; 8:45 am]

BILLING CODE 6353–01–M

DEPARTMENT OF COMMERCE

International Trade Administration

[A–580–815 & A–580–816]

Certain Cold-Rolled and Corrosion-Resistant Carbon Steel Flat Products From Korea: Preliminary Results of Antidumping Duty Administrative Reviews

AGENCY: Import Administration, International Trade Administration, Department of Commerce.

ACTION: Notice of preliminary results of antidumping duty administrative reviews.

SUMMARY: In response to requests from three respondents and from the petitioners in the original investigation, the Department of Commerce (''the Department'') is conducting administrative reviews of the antidumping duty orders on certain cold-rolled and corrosion-resistant carbon steel flat products from Korea. These reviews cover three manufacturers and exporters of the subject merchandise. The period of review (''POR'') is August 1, 1994, through July 31, 1995.

We preliminarily determine that sales have been made below normal value (''NV''). If these preliminary results are

adopted in our final results of administrative reviews, we will instruct U.S. Customs to assess antidumping duties equal to the difference between export price (''EP'') or constructed export price (''CEP'') and NV.

Interested parties are invited to comment on these preliminary results. Parties who submit argument in this proceeding are requested to submit with the argument: (1) a statement of the issue; and (2) a brief summary of the argument.

EFFECTIVE DATE: October 4, 1996.

FOR FURTHER INFORMATION CONTACT: Charles Rast (Dongbu), Steve Bezirganian or Robin Gray (POSCO), Alain Letort (Union), or Linda Ludwig, Enforcement Group III—Office 8, Import Administration, International Trade Administration, U.S. Department of Commerce, 14th Street and Constitution Avenue, N.W., Room 7866, Washington, D.C. 20230; telephone (202) 482–0405 (Rast), –1395 (Bezirganian), –0196 (Gray), –4243 (Letort), or –3833 (Ludwig).

SUPPLEMENTARY INFORMATION:

Applicable Statute

Unless otherwise indicated, all citations to the statute are references to the provisions effective January 1, 1995, the effective date of the amendments made to the Tariff Act of 1930 (''the Act'') by the Uruguay Round Agreements Act (''URAA''). In addition, unless otherwise indicated, all citations to the Department's regulations are to the current regulations, as amended by the interim regulations published in the Federal Register on May 11, 1995 (60 FR 25130).

Background

The Department published antidumping duty orders on certain cold-rolled and corrosion-resistant carbon steel flat products from Korea on August 19, 1993 (58 FR 44159). The Department published a notice of ''Opportunity to Request an Administrative Review'' of the antidumping duty orders for the 1994/95 review period on August 1, 1995 (60 FR 39150). On August 31, 1995, respondents Dongbu Steel Co., Ltd. (''Dongbu''), Union Steel Manufacturing Co., Ltd. (''Union''), and Pohang Iron and Steel Co., Ltd. (''POSCO''), requested that the Department conduct administrative reviews of the antidumping duty orders on cold-rolled and corrosion-resistant carbon steel flat products from Korea. On the same day, the petitioners in the original less-than-fair-value (''LTFV'') investigations (Bethlehem Steel Corporation, U.S. Steel Group—a unit of USX Corporation, Inland Steel Industries, Inc., Geneva Steel, Gulf States Steel Inc. of Alabama, Sharon Steel Corporation, and Lukens Steel Company) filed a similar request. We initiated these reviews on September 5, 1995 (60 FR 46817—September 8, 1996).

On November 20, 1995, the petitioners requested that the Department determine whether antidumping duties had been absorbed by the respondents during the POR, pursuant to section 751(a)(4) of the Act. Section 751(a)(4) provides for the Department, if requested, to determine during an administrative review initiated two years or four years after publication of the orders whether antidumping duties have been absorbed by a foreign producer or exporter subject to the order if the subject merchandise is sold in the United States through an importer who is affiliated with such foreign producer or exporter. Section 751(a)(4) was added to the Act by the URAA. The Department's interim regulations do not address this provision of the Act. For transition orders as defined in section 751(c)(6)(C) of the Act, *i.e.*, orders in effect as of January 1, 1995, section 351(213)(j)(2) of the Department's draft regulations provides that ''* * * [t]he Department will make a duty absorption determination, if requested, for any administrative review initiated in 1996 or 1998.'' *See Notice of Proposed Rulemaking and Request for Public Comments*, 61 FR 7308, 7366 (February 27, 1996) (''*Proposed Regulations*''). The commentary to the proposed regulations explains that reviews initiated in 1996 will be considered initiated in the second year and reviews initiated in 1998 will be considered initiated in the fourth year. Id. at 7317. Although these proposed regulations are not yet binding upon the Department, they do constitute a public statement of how the Department expects to proceed in construing section 751(a)(4) of the amended statute. This approach assures that interested parties will have the opportunity to request a duty absorption determination on entries for which the second and fourth years following an order have already passed, prior to the time for sunset review of the order under section 751(c).

Because the orders on certain cold-rolled and corrosion-resistant carbon steel flat products from Korea have been in effect since 1993, these are transition reviews. Therefore, based on the policy stated above, the Department will first consider a request for an absorption determination if a review is initiated in 1996. Because these reviews were initiated in 1995, we will not undertake a duty-absorption investigation.

Under the Act, the Department may extend the deadline for completion of administrative reviews if it determines that it is not practicable to complete the review within the statutory time limit of 365 days. On March 22, 1996, the Department extended the time limits for preliminary and final results in this case. *See Extension of Time Limit for Antidumping Duty Administrative Reviews*, 61 FR 14291 (April 1, 1996).

The Department is conducting these administrative reviews in accordance with section 751 of the Act.

Scope of the Reviews

The review of ''certain cold-rolled carbon steel flat products'' covers cold-rolled (cold-reduced) carbon steel flat-rolled products, of rectangular shape, neither clad, plated nor coated with metal, whether or not painted, varnished or coated with plastics or other nonmetallic substances, in coils (whether or not in successively superimposed layers) and of a width of 0.5 inch or greater, or in straight lengths which, if of a thickness less than 4.75 millimeters, are of a width of 0.5 inch or greater and which measures at least 10 times the thickness or if of a thickness of 4.75 millimeters or more are of a width which exceeds 150 millimeters and measures at least twice the thickness, as currently classifiable in the Harmonized Tariff Schedule (''HTS'') under item numbers 7209.11.0000, 7209.12.0030, 7209.12.0090, 7209.13.0030, 7209.13.0090, 7209.14.0030, 7209.14.0090, 7209.21.0000, 7209.22.0000, 7209.23.0000, 7209.24.1000, 7209.24.5000, 7209.31.0000, 7209.32.0000, 7209.33.0000, 7209.34.0000, 7209.41.0000, 7209.42.0000, 7209.43.0000, 7209.44.0000, 7209.90.0000, 7210.70.3000, 7210.90.9000, 7211.30.1030, 7211.30.1090, 7211.30.3000, 7211.30.5000, 7211.41.1000, 7211.41.3030, 7211.41.3090, 7211.41.5000, 7211.41.7030, 7211.41.7060, 7211.41.7090, 7211.49.1030, 7211.49.1090, 7211.49.3000, 7211.49.5030, 7211.49.5060, 7211.49.5090, 7211.90.0000, 7212.40.1000, 7212.40.5000, 7212.50.0000, 7217.11.1000, 7217.11.2000, 7217.11.3000, 7217.19.1000, 7217.19.5000, 7217.21.1000, 7217.29.1000, 7217.29.5000, 7217.31.1000, 7217.39.1000, and 7217.39.5000. Included in this review are flat-rolled products of nonrectangular cross-section where

such cross-section is achieved subsequent to the rolling process (*i.e.*, products which have been ''worked after rolling'')—for example, products which have been bevelled or rounded at the edges. Excluded from this review is certain shadow mask steel, *i.e.*, aluminum-killed, cold-rolled steel coil that is open-coil annealed, has a carbon content of less than 0.002 percent, is of 0.003 to 0.012 inch in thickness, 15 to 30 inches in width, and has an ultra flat, isotropic surface.

The review of ''certain corrosion-resistant carbon steel flat products'' covers flat-rolled carbon steel products, of rectangular shape, either clad, plated, or coated with corrosion-resistant metals such as zinc, aluminum, or zinc-, aluminum-, nickel- or iron-based alloys, whether or not corrugated or painted, varnished or coated with plastics or other nonmetallic substances in addition to the metallic coating, in coils (whether or not in successively superimposed layers) and of a width of 0.5 inch or greater, or in straight lengths which, if of a thickness less than 4.75 millimeters, are of a width of 0.5 inch or greater and which measures at least 10 times the thickness or if of a thickness of 4.75 millimeters or more are of a width which exceeds 150 millimeters and measures at least twice the thickness, as currently classifiable in the HTS under item numbers 7210.31.0000, 7210.39.0000, 7210.41.0000, 7210.49.0030, 7210.49.0090, 7210.60.0000, 7210.70.6030, 7210.70.6060, 7210.70.6090, 7210.90.1000, 7210.90.6000, 7210.90.9000, 7212.21.0000, 7212.29.0000, 7212.30.1030, 7212.30.1090, 7212.30.3000, 7212.30.5000, 7212.40.1000, 7212.40.5000, 7212.50.0000, 7212.60.0000, 7215.90.1000, 7215.90.5000, 7217.12.1000, 7217.13.1000, 7217.19.1000, 7217.19.5000, 7217.22.5000, 7217.23.5000, 7217.29.1000, 7217.29.5000, 7217.32.5000, 7217.33.5000, 7217.39.1000, and 7217.39.5000. Included are flat-rolled products of nonrectangular cross-section where such cross-section is achieved subsequent to the rolling process (*i.e.*, products which have been ''worked after rolling'')—for example, products which have been bevelled or rounded at the edges. Excluded are flat-rolled steel products either plated or coated with tin, lead, chromium, chromium oxides, both tin and lead (''terne plate''), or both chromium and chromium oxides (''tin-free steel''), whether or not painted, varnished or coated with plastics or other nonmetallic substances in addition to the metallic coating. Also excluded are clad products in straight lengths of 0.1875 inch or more in composite thickness and of a width which exceeds 150 millimeters and measures at least twice the thickness. Also excluded are certain clad stainless flat-rolled products, which are three-layered corrosion-resistant carbon steel flat-rolled products less than 4.75 millimeters in composite thickness that consist of a carbon steel flat-rolled product clad on both sides with stainless steel in a 20%–60%–20% ratio.

These HTS item numbers are provided for convenience and customs purposes. The written descriptions remain dispositive.

The POR is August 1, 1994 through July 31, 1995. These reviews cover sales of certain cold-rolled and corrosion-resistant carbon steel flat products by Dongbu, Union, and POSCO.

Verification

As provided in section 782(i)(3) of the Act, we verified information provided by the respondents using standard verification procedures, including on-site inspection of the manufacturer's facilities, the examination of relevant sales and financial records, and selection of original documentation containing relevant information. Our verification results are outlined in the public versions of the verification reports.

Transactions Reviewed

In accordance with section 751 of the Act, the Department is required to determine the EP (or CEP) and NV of each entry of subject merchandise during the relevant review period.

In determining NV, based on our review of the submissions by Dongbu, the Department determined that Dongbu need not report downstream sales in the home market because of their small quantity. *See Memorandum to the File from Alain Letort* (November 8, 1996), a copy of which, as well as copies of other memoranda referred to in this notice, are available in Room B–099 of the Department's Central Records Unit. With respect to POSCO, and based on our review of the respondent's submissions, the Department determined that POSCO need not report the home market downstream sales of the service centers in which it owns a minority stake because it appears that they would have a minimal effect upon the calculation of NV, and such reporting would constitute an enormous burden. *See Memorandum to Joseph A. Spetrini from Richard O. Weible* (September 16, 1996).

For purposes of these reviews, we are treating POSCO, Pohang Coated Steel Co., Ltd. (''POCOS''), and Pohang Steel Industries Co., Ltd. (''PSI'') as affiliated parties and have ''collapsed'' them as a single producer of certain cold-rolled carbon steel flat products (POSCO and PSI) and certain corrosion-resistant carbon steel flat products (POSCO, POCOS, and PSI). POSCO, POCOS, and PSI were already collapsed in previous segments of these proceedings. *See Final Determinations of Sales at Less Than Fair Value: Certain Hot-Rolled Carbon Steel Flat Products, Certain Cold-Rolled Carbon Steel Flat Products, Certain Corrosion-Resistant Carbon Steel Flat Products, and Certain Cut-to-Length Carbon Steel Plate from Korea,* 58 FR 37176 (July 9, 1993). Likewise, we have collapsed Union with one of its affiliated parties, Dongkuk Steel Industries Co., Ltd. (''DKI'') for certain cold-rolled carbon steel products only. Union and DKI were already collapsed in previous segments of these proceedings. *See Certain Cold-Rolled Carbon Steel Flat Products from Korea: Preliminary Results of Antidumping Duty Administrative Review,* 60 FR 65284 (December 19, 1995). These companies have submitted no information which would cause us to change that treatment.

Product Comparisons

In accordance with section 771(16) of the Act, we considered all cold-rolled carbon steel flat products produced by the respondents, covered by the descriptions in the ''Scope of the Reviews'' section of this notice, *supra,* and sold in the home market during the POR, to be foreign like products for purposes of determining appropriate product comparisons to U.S. sales of cold-rolled carbon steel flat products. Likewise, we considered all corrosion-resistant carbon steel flat products produced by the respondents and sold in the home market during the POR to be foreign like products of corrosion-resistant carbon steel flat products sold in the United States. Where there were no sales of identical merchandise in the home market to compare to U.S. sales, we compared U.S. sales to the next most similar foreign like product on the basis of the characteristics listed in Appendix III of the Department's September 14, 1995 antidumping questionnaire. In making the product comparisons, we matched foreign like products based on the physical characteristics reported by the respondent and verified by the Department. Where sales were made in the home market on a different weight

basis from the U.S. market (theoretical versus actual weight), we converted all quantities to the same weight basis, using the conversion factors supplied by the respondents, before making our fair-value comparisons.

Fair-Value Comparisons

To determine whether sales of certain cold-rolled and corrosion-resistant carbon steel flat products by the respondents to the United States were made at less than fair value, we compared EP (or CEP) to NV, as described in the ''Export Price (or Constructed Export Price)'' and ''Normal Value'' sections of this notice. In accordance with section 777A(d)(2), we calculated monthly weighted-average prices for NV and compared these to individual U.S. transactions.

Viability of Home Market

On March 25, 1996, the petitioners alleged that the Government of Korea controls steel prices in Korea and that the home-market prices reported by respondents are therefore not true market prices. Claiming that the home market was not ''viable,'' the petitioners requested that the Department collect third-country sales information for each of the Korean respondents, and use the respondents' sales of subject merchandise to third countries for purposes of comparison with prices in the U.S. market.

On May 23, 1996, the Department issued a supplemental questionnaire to each of the respondents requesting detailed information relevant to the issue of the viability of the home market. On June 17, 1996, Dongbu, POSCO, and Union all submitted responses to the home-market viability questionnaire. These responses were subjected to thorough verification in Korea, as were the sales and cost responses.

The petitioners' allegations have presented the Department with new and complex issues as to whether the facts on the record of these administrative reviews describe a particular market situation in the exporting country, Korea, that does not permit a proper comparison with the export price or constructed export price. We have preliminarily determined that the home market is viable because the information submitted by the petitioners, and the questionnaire responses submitted by the respondents and verified by the Department, do not show that there is a particular market situation in Korea that warrants a determination of non-viability in this case. We note, however, that this is a new issue under the URAA that has not previously been addressed and the Department will further analyze this issue before making its final determination. We intend to solicit additional information and arguments submitted on this issue.

Affiliated-Party Issue

On March 13 and April 15, 1996, petitioners alleged that, because Dongbu and Union purchase hot-rolled steel coils from POSCO for purposes of manufacturing certain cold-rolled and corrosion-resistant carbon steel products and because POSCO has a ''close supplier relationship'' with Dongbu and Union, the latter should be considered ''affiliates'' of POSCO within the meaning of section 771(33) of the Act (19 U.S.C. § 1677(33)). Petitioners therefore requested that the Department (1) collect information on the comparative prices Dongbu and Union paid POSCO and unaffiliated suppliers for hot-rolled steel coils in order to ascertain whether POSCO supplied this input to Union at ''arm's-length'' prices; and (2) require Dongbu and Union to submit cost-of-production (''COP'') information on coil inputs purchased from POSCO in order to determine whether the transfer prices of hot-rolled steel coil from POSCO to Dongbu and Union were below or above POSCO's COP.

In addition, on May 7, 1996, petitioners alleged that Union is affiliated with POSCO not just through its close supplier relationship with the latter but also via indirect stock ownership.

On the basis of the information supplied by both petitioners and respondents, the Department has preliminarily determined that neither Dongbu or Union can be considered as ''affiliates'' of POSCO within the meaning of section 771(33) of the Act. *See Memorandum to Joseph A. Spetrini from Richard O. Weible* (September 6, 1996). The Department, therefore, did not request the respondents to provide the information that the petitioners had suggested.

Date of Sale

Depending on the channel of trade and on the date after which the key terms of sale could not be changed, we treated one of the following dates as the date of the sale: the date of the purchase order, the date of the internal confirmation, the date of the production order, or the date of shipment.

A. Dongbu

We used the date of shipment as the date of sale for home-market sales by Dongbu. For Dongbu's U.S. sales, we used the contract date or the purchase-order date as the date of sale, depending on the channel of trade and on the date after which the key terms of sale could not be changed.

B. POSCO

We used the date of shipment as the date of sale for home-market sales by Pohang Coil Center Co., Ltd. (''PCC'') and PSI because the key terms of the sale were subject to change before this date. We used the date of shipment as the date of sale for home-market sales of overrun merchandise by POSTEEL, Kyung Ahn Co. (''KA'') (now known as ''POSTEEL''), and Keo Yang Co., Ltd. (''KY'') (now known as ''POSTRADE'') because the key terms of sale are fixed on that date. We used the date of purchase order as the date of sale for all POSCO sales, all POCOS sales, PSI's U.S. sales, and home-market sales of non-overrun merchandise by POSTEEL, KA, and KY because the key terms of sale were not subject to change after that date.

C. Union

We used the date of shipment as the date of sale for Union's home-market sales, and the contract date as the date of sale for Union's U.S. sales.

Export Price (or Constructed Export Price)

We calculated the price of United States sales based on EP, in accordance with section 772(a) of the Act, when the subject merchandise was sold to unaffiliated purchasers in the United States prior to the date of importation. In certain instances, however, we determined that CEP, as defined in section 772(b) of the Act, was a more appropriate basis for the price of United States sales. These instances involved sales made prior to importation where the merchandise was further processed by an outside contractor in the United States on a fee-for-service basis. In this case, the Department's determination was based on the following facts: (a) Union America (''UA'') and later Dongkuk International (''DKA''), Union's sales office in the United States, was the importer of record and took title to the merchandise; (b) UA or DKA financed the relevant sales transactions; (c) UA arranged and paid for the further processing; and (d) UA or DKA assumed the seller's risk.

For all three respondents, we calculated EP based on packed prices to unaffiliated customers in the United States. Where appropriate, we made deductions from the starting price for foreign inland freight, foreign brokerage and handling, international freight, marine insurance, U.S. inland freight,

U.S. brokerage and handling, and U.S. Customs duties; we also added duty drawback to the starting price.

We calculated CEP based on packed prices to unaffiliated customers in the United States. Where appropriate, we made deductions from the starting price for foreign inland freight, foreign brokerage and handling, international freight, marine insurance, U.S. inland freight, U.S. brokerage and handling, U.S. Customs duties, commissions, credit expenses, warranty expenses, indirect selling expenses, and further processing in the United States; we also added duty drawback to the starting price. Finally, we made an adjustment for the amount of profit allocated to these expenses, in accordance with section 772(d)(3) of the Act.

Normal Value

Based on a comparison of the aggregate quantity of home-market and U.S. sales, we determined that the quantity of the foreign like product sold in the exporting country was sufficient to permit a proper comparison with the sales of the subject merchandise to the United States, pursuant to section 773(a) of the Act. Therefore, in accordance with section 773(a)(1)(B)(i) of the Act, we based NV on the price at which the foreign like product was first sold for consumption in the home market, in the usual commercial quantities and in the ordinary course of trade.

Where appropriate, we deducted rebates, discounts, inland freight (offset where applicable by freight revenue), inland insurance, and packing. We also deducted value-added tax (''VAT'') since the reported gross unit price included VAT. Based on our verification of home-market sales responses, we made adjustments to NV, where appropriate, for differences in credit expenses (offset where applicable by interest income), post-sale warehousing, and for differences in weight basis. We also made adjustments, where appropriate, for home-market indirect selling expenses to offset U.S. commissions in EP and CEP comparisons.

In comparisons to EP and CEP sales, we also increased NV by U.S. packing costs in accordance with section 773(a)(6)(A) of the Act. We made adjustments to NV for differences in cost attributable to differences in physical characteristics of the merchandise, pursuant to section 773(a)(6)(C)(ii) of the Act. In accordance with the Department's practice, where for the most similar product match the difference in merchandise adjustment for any product comparison exceeded 20 percent, we based NV on constructed value (''CV'').

Differences in Levels of Trade

As set forth in section 773(a)(1)(B)(i) of the Act and in the Statement of Administrative Action which accompanied the passage of the URAA (H.R. Doc. No. 316, 103rd Cong., 2nd Sess. 829–831 (1994)) (''SAA''), to the extent practicable, the Department will calculate NV based on sales at the same level of trade as the U.S. sales. When the Department is unable to find sales in the comparison market at the same level of trade as the U.S. sale(s), the Department may compare sales in the U.S. and foreign markets at different levels of trade. *See also Final Determination of Sales at Less Than Fair Value: Certain Pasta from Italy* (61 FR 30326—June 14, 1996).

In accordance with section 773(a)(7)(A), if sales at different levels of trade are compared, the Department will adjust the NV to account for the difference in level of trade if two conditions are met. First, there must be differences between the actual selling functions performed by the seller at the level of trade of the U.S. sale and the level of trade of the normal-value sale. Second, the differences between the levels of trade must affect price comparability as evidenced by a pattern of consistent price differences between sales at the different levels of trade in the market in which NV is determined.

In order to determine that there is a difference in level of trade, the Department must find that two sales have been made at different phases of marketing, or the equivalent. Different phases of marketing necessarily involve differences in selling functions, but differences in selling functions (even substantial ones) are not alone sufficient to establish a difference in the level of trade. Similarly, seller and customer descriptions (such as ''distributor'' and ''wholesaler'') are useful in identifying different levels of trade, but are insufficient to establish that there is a difference in the level of trade.

A. Dongbu

In its questionnaire responses, Dongbu stated that there were no differences in its selling activities by customer categories within each market. In order independently to confirm the absence of separate levels of trade within or between the U.S. and home markets, we examined Dongbu's questionnaire responses for indications that Dongbu's functions as a seller differed qualitatively and quantitatively among customer categories. Where possible, we further examined whether each selling function was performed on a substantial portion of sales. *See Proposed Regulations,* 61 FR at 7348.

Dongbu sold to local distributors, service centers, and end-users in the U.S. market. In the home market, Dongbu sold to local distributors, service centers, and end-users. Dongbu performed the same selling and marketing functions at the same stage of distribution on sales to all its home-market customers, as well as to U.S. customers. Thus, our analysis of the questionnaire response leads us to conclude that sales within or between each market are not made at different levels of trade. Accordingly, we preliminarily find that all sales in the home market and the U.S. market were made at the same level of trade. Therefore, all price comparisons are at the same level of trade and an adjustment pursuant to section 773(a)(7)(A) is unwarranted.

B. POSCO

In its questionnaire responses, POSCO stated that its home-market sales by affiliated service centers were at a different level of trade than its other home-market sales and its U.S. sales (regardless of the customer category). The respondent indicated that the service centers provide certain selling functions to all of their customers, while POSCO and its selling arms (*e.g.*, POSTEEL, POCOS, and PSI) provide a different set of selling functions to all of their customers (including the service centers).

In order independently to confirm the presence of separate levels of trade within or between the U.S. and home markets, we examined POSCO's questionnaire responses for indications of substantive differences in selling and marketing functions, and reviewed this issue during the sales verification in Korea. Where possible, we further examined whether each selling function was performed on a substantial portion of sales. *See Proposed Regulations,* 61 FR at 7348.

At verification, the company did not adequately support its claim that the service centers perform selling functions which, on a qualitative and quantitative basis, are different from the functions performed on their U.S. sales. Thus, our analysis of the questionnaire responses leads us to conclude that sales within or between each market are not made at different levels of trade. Accordingly, we preliminarily find that all sales in the home market and the U.S. market were made at the same level of trade. Therefore, all price comparisons are at the same level of trade and an

adjustment pursuant to section 773(a)(7)(A) is unwarranted.

C. Union

In its questionnaire responses, Union stated that there were no differences in its selling activities by customer categories within each market. In order independently to confirm the absence of separate levels of trade within or between the U.S. and home markets, we examined Union's questionnaire responses for indications that Union's functions as a seller differed, qualitatively and quantitatively, among customer categories. Where possible, we further examined whether each selling function was performed on a substantial portion of sales. *See Proposed Regulations*, 61 FR at 7348.

Union sold to unrelated distributors and end-users in the U.S. market. In the home market, Union sold to unrelated distributors and end-users and to related distributors for sale to unrelated end-users. Union performed the same selling and marketing functions at the same stage of distribution on sales to all its home-market customers, as well as to U.S. customers. In identifying the level of trade for CEP sales, we considered only the selling activities reflected in the U.S. price after deduction of expenses and profit under section 772(d) of the Act. Pursuant to section 773(a)(1)(B)(i) of the Act, we consider the selling functions reflected in the starting price of home-market sales before any adjustments. Our analysis of the questionnaire response leads us to conclude that sales within and between each market are not made at different levels of trade. Accordingly, we preliminarily find that all sales in the home market and the U.S. market were made at the same level of trade. Therefore, all price comparisons are at the same level of trade and an adjustment pursuant to section 773(a)(7)(A) is unwarranted.

Cost-of-Production Analysis

Based on the fact that the Department had disregarded certain sales by POSCO in the original LTFV investigations because they were made below the COP, the Department found reasonable grounds in these reviews, in accordance with section 773(b)(2)(A)(ii) of the Act, to believe or suspect that POSCO made sales in the home market at prices below the cost of producing the merchandise. In addition, petitioners alleged, on January 16, 1996 (with respect to Dongbu), and January 17, 1996 (with respect to Union), that Dongbu and Union sold certain cold-rolled and corrosion-resistant carbon steel flat products in the home market at prices below COP. Based on these allegations, the Department determined, on January 26, 1996 (for Dongbu), and on January 29, 1996 (for Union), that it had reasonable grounds to believe or suspect that Dongbu and Union had sold the subject merchandise in the home market at prices below the COP. We therefore initiated cost investigations with regard to Dongbu, POSCO, and Union in order to determine whether the respondents made home-market sales during the POR at prices below their COP within the meaning of section 773(b) of the Act.

Before making any fair-value comparisons, we conducted the COP analysis described below.

A. Calculation of COP

We calculated the COP based on the sum of each respondent's cost of materials and fabrication for the foreign like product, plus amounts for home-market selling, general, and administrative expenses (''SG&A''), and packing costs in accordance with section 773(b)(3) of the Act.

1. Dongbu

Based on our verification of Dongbu's cost responses, we revised Dongbu's general and administrative expense (''G&A'') factor to exclude foreign exchange translation gains and losses not related to the production of the subject merchandise. We reduced Dongbu's cost of sales amount by 1994 scrap revenue that the company used to offset manufacturing costs.

2. POSCO

Based on our verification of POSCO's cost responses, we revised the value of substrate sold by POSCO to POCOS, PSI and PCC. We used the higher of the cost of the substrate, the transfer price or the fair value.

- For certain POCOS and POSCO control numbers, we revised the cost of manufacturing (''COM'') to reflect differences in quality and coating weight production costs.
- We included donations and prior-period severance benefits in G&A, and excluded from G&A gains and losses from the disposition of securities as well as rental income.
- We revised the interest expense calculation to reflect the consolidated interest expense of POSCO, deferred foreign-exchange losses, and gains and losses from the translation of loans payable denominated in foreign currencies.

3. Union

Based on our verification of Union's cost responses, we adjusted Union's reported COP to reflect certain adjustments to the COM, G&A, and indirect selling expenses:

- We increased Union's reported COM by the unreconciled difference between total production cost and reported production cost.
- We revised Union's submitted G&A factor to exclude foreign exchange gains and losses not related to the production of the subject merchandise, and to exclude securities disposal loss, dividend income and rental income because they related to investment activities unassociated with the production of the subject merchandise.
- We reduced Union's reported cost of sales amounts by 1994 scrap revenues that Union used to offset manufacturing costs.
- We combined net interest expenses for Union and its related parties DKI and the Dongkuk Steel Mill group (''DSM'') because DSM's ownership interest in Union and DKI places it, as the parent company, in a position to influence Union's financial borrowing and overall capital structure of the DSM *chaebŏl*.
- We included foreign currency gains and losses that related to long-term debt in Union's financing expense and reduced Union's cost of sales by scrap revenue.

B. Test of Home-Market Prices

We used the respondent's weighted-average COP, as adjusted (see above), for the period July 1994 to June 1995. We compared the weighted-average COP figures to home-market sales of the foreign like product as required under section 773(b) of the Act. In determining whether to disregard home-market sales made at prices below the COP, we examined whether (1) within an extended period of time, such sales were made in substantial quantities, and (2) such sales were made at prices which permitted the recovery of all costs within a reasonable period of time. On a product-specific basis, we compared the COP to the home-market prices (not including VAT), less any applicable movement charges, discounts, and rebates.

C. Results of COP Test

Pursuant to section 773(b)(2)(C), where less than 20 percent of respondent's sales of a given product were at prices less than the COP, we did not disregard any below-cost sales of that product because we determined that the below-cost sales were not made in ''substantial quantities.'' Where 20 percent or more of a respondent's sales of a given product during the POR were at prices less than the COP, we found that sales of that model were made in

''substantial quantities'' within an extended period of time, in accordance with sections 773(b)(2) (B) and (C) of the Act, and were not at prices which would permit recovery of all costs within an extended period of time, in accordance with section 773(b)(2)(D) of the Act. When we found that below-cost sales had been made in ''substantial quantities'' and were not at prices which would permit recovery of all costs within a reasonable period of time, we disregarded the below-cost sales in accordance with section 773(b)(1) of the Act. Where all sales of a specific product were at prices below the COP, we disregarded all sales of that product, and calculated NV based on CV.

D. Calculation of CV

In accordance with section 773(e) of the Act, we calculated CV based on the sum of respondents' cost of materials, fabrication, SG&A, U.S. packing costs, interest expenses, and profit. In accordance with sections 773(e)(2)(A), we based SG&A and profit on the amounts incurred and realized by the respondent in connection with the production and sale of the foreign like product in the ordinary course of trade, for consumption in the foreign country. For selling expenses, we used the weighted-average home-market selling expenses. Based on our verification of the cost responses submitted by Dongbu, POSCO, and Union, we adjusted each company's reported CV to reflect adjustments to COM and G&A, as detailed in the ''Calculation of COP'' section of this notice. We also made adjustments, where appropriate, for home-market indirect selling expenses to offset U.S. commissions in EP and CEP comparisons.

Currency Conversion

For purposes of the preliminary results, we made currency conversions based on the official exchange rates in effect on the dates of the U.S. sales as certified by the Federal Reserve Bank of New York. Section 773A(a) directs the Department to use a daily exchange rate in order to convert foreign currencies into U.S. dollars, unless the daily rate involves a ''fluctuation.'' In accordance with the Department's practice, we have determined that a fluctuation exists when the daily exchange rate differs from a benchmark by 2.25 percent. *See, e.g., Certain Stainless Steel Wire Rods from France: Preliminary Results of Antidumping Duty Administrative Review* (61 FR 8915, 8918—March 6, 1996). The benchmark is defined as the rolling average of rates for the past 40 business days. When we determined a fluctuation existed, we substituted the benchmark for the daily rate. However, for the preliminary results we have not determined that a fluctuation exists, and we have not substituted the benchmark for the daily rate.

Preliminary Results of the Reviews

As a result of these reviews, we preliminarily determine that the following weighted-average dumping margins exist:

Producer/manufacturer/exporter	Weighted-average margin (percent)
Certain Cold-Rolled Carbon Steel Flat Products	
Dongbu	0.10
Union	0.00
POSCO	0.19
Certain Corrosion-Resistant Carbon Steel Flat Products	
Dongbu	0.00
Union	1.28
POSCO	0.06

Parties to this proceeding may request disclosure within five days of publication of this notice and any interested party may request a hearing within 10 days of publication. Any hearing, if requested, will be held 44 days after the date of publication, or the first working day thereafter. Interested parties may submit case briefs and/or written comments no later than 30 days after the date of publication. Rebuttal briefs and rebuttals to written comments, limited to issues raised in such briefs or comments, may be filed no later than 37 days after the date of publication of this notice. The Department will publish a notice of the final results of the administrative review, including its analysis of issues raised in any written comments or at a hearing, not later than 180 days after the date of publication of this notice.

Cash Deposit

The following deposit requirements will be effective upon completion of the final results of this administrative review for all shipments of certain cold-rolled and corrosion-resistant carbon steel flat products from Korea entered, or withdrawn from warehouse, for consumption on or after the publication date of the final results of these administrative reviews, as provided by section 751(a)(1) of the Act and 19 CFR 353.22: (1) The cash deposit rate for each respondent will be the rate established in the final results of these administrative reviews (except that no deposit will be required for firms with zero or *de minimis* margins, *i.e.*, margins lower than 0.5 percent; (2) for previously reviewed or investigated companies not listed above, the cash deposit rate will continue to be the company-specific rate published for the most recent period; (3) if the exporter is not a firm covered in these reviews, a prior review, or the original LTFV investigations, but the manufacturer is, the cash deposit rate will be the rate established for the most recent period for the manufacturer of the merchandise; and (4) the cash deposit rate for all other manufacturers or exporters will be 14.44 percent (for certain cold-rolled carbon steel flat products) and 17.70 percent (for certain corrosion-resistant carbon steel flat products, the ''all others'' rates established in the LTFV investigations. These deposit requirements, when imposed, shall remain in effect until publication of the final results of the next administrative review.

This notice serves as a preliminary reminder to importers of their responsibility under 19 CFR 353.26 to file a certificate regarding the reimbursement of antidumping duties prior to liquidation of the relevant entries during this review period. Failure to comply with this requirement could result in the Secretary's presumption that reimbursement of antidumping duties occurred and the subsequent assessment of double antidumping duties.

These administrative reviews and notice are in accordance with section 751(a)(1) of the Act (19 U.S.C. 1675(a)(1)) and 19 CFR 353.22.

Dated: September 25, 1996.

Robert S. LaRussa,

Acting Assistant Secretary for Import Administration.

[FR Doc. 96–25535 Filed 10–3–96; 8:45 am]

BILLING CODE 3510–DS–P

[A–421–804]

Certain Cold-Rolled Carbon Steel Flat Products From the Netherlands; Preliminary Results of Antidumping Duty Administrative Review

AGENCY: Import Administration, International Trade Administration, Department of Commerce.

ACTION: Notice of preliminary results of antidumping duty administrative review.

SUMMARY: In response to requests from the respondent, Hoogovens Staal BV (Hoogovens), and from the petitioners in the original investigation, the

Department of Commerce (the Department) is conducting an administrative review of the antidumping duty order on certain cold-rolled carbon steel flat products from the Netherlands. This review covers one manufacturer/exporter, Hoogovens, and the period August 1, 1994 through July 31, 1995.

We preliminarily determine the dumping margin for Hoogovens to be 9.26 percent during the period August 1, 1994, through July 31, 1995. Interested parties are invited to comment on these preliminary results. Parties who submit argument in this proceeding are requested to submit with the argument: (1) A statement of the issue; and (2) a brief summary of the argument.

EFFECTIVE DATE: October 4, 1996.

FOR FURTHER INFORMATION CONTACT: Helen M. Kramer or Linda D. Ludwig, Enforcement Group III, Import Administration, International Trade Administration, U.S. Department of Commerce, 14th Street and Constitution Avenue, N.W., Room 7866, Washington, D.C. 20230; telephone (202) 482–0405 or (202) 482–3833, respectively.

SUPPLEMENTARY INFORMATION:

The Applicable Statute

Unless otherwise indicated, all citations to the statute are references to the provisions effective January 1, 1995, the effective date of the amendments made to the Tariff Act of 1930 (the Act) by the Uruguay Rounds Agreements Act (URAA). In addition, unless otherwise indicated, all citations to the Department's regulations are to the current regulations, as amended by the interim regulations published in the Federal Register on May 11, 1995 (60 FR 25130).

Background

The Department published an antidumping duty order on certain cold-rolled carbon steel flat products from the Netherlands on August 19, 1993 (58 FR 44172). The Department published a notice of ''Opportunity to Request an Administrative Review'' of the antidumping duty order for the 1994/95 review period on August 1, 1995 (60 FR 39150). On August 29, 1995, Hoogovens requested that the Department conduct an administrative review of the antidumping duty order on cold-rolled carbon steel flat products from the Netherlands. The petitioners made a similar request on August 31, 1995. We initiated the review on September 8, 1995 (60 FR 46817).

On February 15, 1996, the petitioners requested that the Department determine, in accordance with section 751(a)(4) of the Act, whether antidumping duties have been absorbed by Hoogovens during the period of review (''POR''). Section 351.213(j) of the Department's draft regulations provides that, for transition orders as defined in section 751(c)(6)(C) of the Act, *i.e.*, orders in effect as of January 1, 1995, reviews initiated in 1996 will be considered initiated in the second year, and reviews initiated in 1998 will be considered initiated in the fourth year. 61 FR 7317, 7366 (February 27, 1996). Although these regulations are not yet binding upon the Department, they do constitute a public statement of how the Department expects to proceed in construing section 751(a)(4) of the new statute. This approach assures that, prior to the time for sunset review under section 751(c), interested parties will still have the opportunity to request a duty absorption study on orders for which the second and fourth anniversaries have already passed.

Because the order being reviewed here has been in effect since 1993, this is a review of a transition order. Therefore, based on the policy stated above, the Department will first consider a request for an absorption study if a review is initiated in 1996.

Under the Act, the Department may extend the deadline for completion of administrative reviews if it determines that it is not practicable to complete the review within the statutory time limit of 365 days. On April 1, 1996, the Department extended the time limits for preliminary and final results in this case. *See Extension of Time Limit for Antidumping Duty Administrative Reviews,* 61 FR 14291.

The Department is now conducting this administrative review in accordance with section 751 of the Act.

Scope of the Review

The products covered by this review include cold-rolled (cold-reduced) carbon steel flat-rolled products, of rectangular shape, neither clad, plated nor coated with metal, whether or not painted, varnished or coated with plastics or other nonmetallic substances, in coils (whether or not in successively superimposed layers) and of a width of 0.5 inch or greater, or in straight lengths which, if of a thickness less than 4.75 millimeters, are of a width of 0.5 inch or greater and which measures at least 10 times the thickness or if of a thickness of 4.75 millimeters or more are of a width which exceeds 150 millimeters and measures at least twice the thickness, as currently classifiable in the Harmonized Tariff Schedule (HTS) under item numbers 7209.11.0000, 7209.12.0030, 7209.12.0090, 7209.13.0030, 7209.13.0090, 7209.14.0030, 7209.14.0090, 7209.21.0000, 7209.22.0000, 7209.23.0000, 7209.24.1000, 7209.24.5000, 7209.31.0000, 7209.32.0000, 7209.33.0000, 7209.34.0000, 7209.41.0000, 7209.42.0000, 7209.43.0000, 7209.44.0000, 7209.90.0000, 7210.70.3000, 7210.90.9000, 7211.30.1030, 7211.30.1090, 7211.30.3000, 7211.30.5000, 7211.41.1000, 7211.41.3030, 7211.41.3090, 7211.41.5000, 7211.41.7030, 7211.41.7060, 7211.41.7090, 7211.49.1030, 7211.49.1090, 7211.49.3000, 7211.49.5030, 7211.49.5060, 7211.49.5090, 7211.90.0000, 7212.40.1000, 7212.40.5000, 7212.50.0000, 7217.11.1000, 7217.11.2000, 7217.11.3000, 7217.19.1000, 7217.19.5000, 7217.21.1000, 7217.29.1000, 7217.29.5000, 7217.31.1000, 7217.39.1000, and 7217.39.5000.

Included in this review are flat-rolled products of nonrectangular cross-section where such cross-section is achieved subsequent to the rolling process (*i.e.*, products which have been ''worked after rolling'')—for example, products which have been bevelled or rounded at the edges. Excluded from this review is certain shadow mask steel, *i.e.*, aluminum-killed, cold-rolled steel coil that is open-coil annealed, has a carbon content of less than 0.002 percent, is of 0.003 to 0.012 inch in thickness, 15 to 30 inches in width, and has an ultra flat, isotropic surface. These HTS item numbers are provided for convenience and Customs purposes. The written description remains dispositive.

Verification

As provided in section 782(i)(3) of the Act, we verified information provided by Hoogovens and its U.S. affiliate, Rafferty-Brown Steel Co., Inc. of Connecticut, using standard verification procedures, including on-site inspection of the manufacturer's facilities, the examination of relevant sales and financial records, and selection of original documentation containing relevant information. Our verification results are outlined in the public versions of the verification reports.

Transactions Reviewed

In accordance with Section 751 of the Act, the Department is required to determine the normal value and export price (EP) of each entry of subject merchandise during the relevant review period, and the normal value and constructed export price (CEP) of each sale to the first unaffiliated customer in

the United States during the extended window period.

Based on a comparison of the aggregate quantity of home market and U.S. sales, we determined that the quantity of foreign like product sold in the exporting country was sufficient to permit a proper comparison with the sales of the subject merchandise to the United States, pursuant to section 773(a) of the Act. Therefore, in accordance with section 773(a)(1)(B)(i) of the Act, we based normal value (NV) on the price at which the foreign like product was first sold for consumption in the home market, in the usual commercial quantities and in the ordinary course of trade. We determined that Hoogovens need not report its home market sales made by an affiliated party to the first unaffiliated customer (downstream sales), because these sales were small. (*See* Memorandum for the File, November 8, 1995.) We used sales to affiliated customers only where we determined such sales were made at arm's-length prices, *i.e.*, at prices comparable to prices at which the respondent sold identical merchandise to unrelated customers. There were no allegations of below-cost sales in the home market.

Product Comparisons

In accordance with section 771(16) of the Act, we considered all products produced by the respondent covered by the description in the Scope of the Review section, above, and sold in the home market during the POR, to be foreign like products for purposes of determining appropriate product comparisons to U.S. sales. Where there were no sales of identical merchandise in the home market to compare to U.S. sales, we compared U.S. sales to the next most similar foreign like product on the basis of the characteristics listed in Appendix III of the Department's September 14, 1995 antidumping questionnaire. In making the product comparisons, we matched foreign like products based on the physical characteristics reported by the respondent and verified by the Department.

Fair Value Comparisons

To determine whether sales of certain cold-rolled carbon steel flat products by Hoogovens to the United States were made at less than fair value, we compared EP or CEP to NV, as described in the United States Price and Normal Value sections of this notice. In accordance with section 777A(d)(2), we calculated monthly weighted-average prices for NV and compared these to individual U.S. transactions. In accordance with section 773(a)(4) of the Act, we used constructed value (CV) as the basis for NV when there were no contemporaneous sales of the foreign like product in the comparison market. All the sales to which CV was applied were CEP sales of secondary merchandise. We calculated CV in accordance with section 773(e) of the Act and the methodology enunciated in the Memorandum of April 19, 1995, entitled *Treatment of Non-Prime Merchandise for the First Administrative Review of Certain Carbon Steel Flat Products.* We included the cost of manufacture, and selling, general and administrative expenses (SG&A). In accordance with section 773(e)(2)(A) of the Act, we based SG&A expenses on the amounts incurred by the respondent in connection with the production and sale of the foreign like product in the ordinary course of trade for consumption in the comparison market. For selling expenses, we used the weighted average home market selling expenses. There were no adjustments to CV for differences in circumstances of sale.

United States Price (USP)

For the price to the United States, we used export price (EP) or constructed export price (CEP) as defined in sections 772(a) and 772(b) of the Act, as appropriate. All of the CEP sales were further manufactured in the United States.

We calculated EP and CEP based on the packed, delivered, duty-paid price to unaffiliated customers in the United States. We made deductions for movement expenses (foreign inland freight, foreign brokerage and handling, international freight, marine insurance, U.S. inland freight, U.S. brokerage and handling, and U.S. Customs duties) in accordance with section 772(c)(2)(A) of the Act. For EP sales, we made deductions from the gross unit price for discounts where applicable. We accounted for post-sale price adjustments for individual sales (reported in the ''Other Discounts'' field) by reducing or increasing the gross unit price, as appropriate. In accordance with section 772(d)(1) of the Act and the Statement of Administrative Action (SAA) (at 823–824), we calculated the CEP by deducting discounts, selling expenses associated with economic activities occurring in the United States, including commissions, credit expenses, and indirect selling expenses, inventory carrying costs and repacking expenses. In accordance with section 772(d)(2) of the Act, we also deducted the cost of further manufacturing. Finally, we made an adjustment for an amount of profit allocated to these expenses in accordance with section 772(d)(3) of the Act. No other adjustments to EP or CEP were claimed or allowed.

Normal Value

Home market prices were based on the packed, ex-factory or delivered prices to affiliated or unaffiliated customers and were reported net of value added tax. We deducted packing and movement expenses in accordance with sections 773(a)(6) (A) and (B) of the Act. We made adjustments, where appropriate, for discounts, rebates and post-sale price adjustments. In comparisons to EP and CEP sales, we also made adjustments to NV for differences in cost attributable to differences in physical characteristics of the merchandise pursuant to section 773(a)(6)(C)(ii) of the Act and increased NV by U.S. packing costs in accordance with section 773(a)(6)(A) of the Act.

As set forth in section 773(a)(1)(B)(i) of the Act and in the SAA at 829–831, to the extent practicable, the Department will calculate NVs based on sales at the same level of trade as the U.S. sales. When the Department is unable to find sales in the comparison market at the same level of trade as the U.S. sales, the Department may compare sales in the U.S. and foreign markets at different levels of trade. *See*, also, *Final Determination of Sales at Less Than Fair Value: Certain Pasta from Italy* (61 FR 30326, June 14, 1996) (*Pasta from Italy*).

In accordance with section 773(a)(7)(A), if sales at different levels of trade are compared, the Department will adjust the NV to account for the difference in level of trade if two conditions are met. First, there must be differences between the actual selling functions performed by the seller at the level of trade of the U.S. sale and the level of trade of the NV sale. Second, the difference must affect price comparability as evidenced by a pattern of consistent price differences between sales at the different levels of trade in the market in which NV is determined.

In its response to Section A of the questionnaire, Hoogovens stated that it made sales in the U.S. and home markets at two distinct levels of trade: (1) sales to end-user customers, and (2) sales to steel service centers. In its Section B response, Hoogovens explained that it cannot differentiate among the selling functions performed and services offered to the different classes of home market or export price customers during the POR. Consequently, Hoogovens could not

meet the Department's test and did not claim a level of trade adjustment with respect to its EP sales in this review. Hoogovens reported these sales using the code ''1'' in the CUSTLOTH and CUSTLOTU fields. However, Hoogovens argued that all of its home market sales used as the basis of NV involved the performance of various selling activities, many of which are not accounted for by the direct selling expense adjustment to NV. Therefore, Hoogovens claimed, there is no home market equivalent to the CEP and Hoogovens requested that the Department make an adjustment to NV for indirect selling expenses up to the amount of indirect selling expenses deducted from CEP. Hoogovens reported CEP sales using the code ''2'' in the CUSTLOTU field.

During verification, the team interviewed Hoogoven's Senior Sales Executive for Stripmill Products regarding services provided to different categories of customers. He explained that the company provides the same types of services to all customers in all markets. *See* the public version of the verification report, p. 10. In identifying the level of trade for CEP sales, we considered only the selling activities reflected in the U.S. price after deduction of expenses and profit under section 772(d) of the Act. Pursuant to section 773(a)(1)(B)(i) of the Act, we considered the selling functions reflected in the starting price of the home market sales before any adjustments. Based on our analysis, we preliminarily find that no level of trade differences exist between any sales in either the home market or the U.S. market. Therefore, all price comparisons are at the same level of trade, and neither an adjustment pursuant to section 773(a)(7)(A), nor a circumstances of sale adjustment in accordance with section 773(a)(6)(C)(iii) of the Act and 19 C.F.R. 353.56, is warranted.

Currency Conversion

For purposes of the preliminary results, we made currency conversions based on the official exchange rates in effect on the dates of the U.S. sales as certified by the Federal Reserve Bank of New York. Section 773A(a) of the Act directs the Department to use a daily exchange rate in order to convert foreign currencies into U.S. dollars, unless the daily rate involves a ''fluctuation.'' In accordance with the Department's practice, we have determined that a fluctuation exists when the daily exchange rate differs from a benchmark by 2.25 percent. The benchmark is defined as the rolling average of rates for the past 40 business days. When we determine a fluctuation existed, we substitute the benchmark for the daily rate. However, for the preliminary results we have not determined that a fluctuation exists, and we have not substituted the benchmark for the daily rate.

Reimbursement

Section 353.26 of the antidumping regulations requires the Department to deduct from the United States price the amount of any antidumping duty that a producer or reseller either pays directly on behalf of the importer or reimburses to the importer. Based on verified evidence on the record in this review, the Department has preliminarily determined that Hoogovens has agreed to reimburse Hoogovens Steel USA, Inc. (formerly N.V.W. (USA), Inc.), the importer of record, for antidumping duties to be assessed, and has reimbursed Hoogovens Steel for antidumping duty cash deposits made on entries during the POR. Therefore, the regulation applies.

Preliminary Results of the Review

As a result of this review, we preliminarily determine that the following weighted-average dumping margin exists:

Manufacturer/ exporter	Period	Margin (percent)
Hoogovens Staal BV.....	8/1/94–7/31/95	9.26

Parties to this proceeding may request disclosure within five days of publication of this notice and any interested party may request a hearing within 10 days of publication. Any hearing, if requested, will be held 44 days after the date of publication, or the first working day thereafter. Interested parties may submit case briefs and/or written comments no later than 30 days after the date of publication. Rebuttal briefs and rebuttals to written comments, limited to issues raised in such briefs or comments, may be filed no later than 37 days after the date of publication. The Department will publish a notice of the final results of the administrative review, which will include the results of its analysis of issues raised in any such written comments or at the hearing, within 180 days from the issuance of these preliminary results.

The Department shall determine, and Customs shall assess, antidumping duties on all appropriate entries. Individual differences between USP and NV, taking into account reimbursed duties, may vary from the percentage stated above. The Department will issue appraisement instructions directly to Customs. The final results of this review shall be the basis for the assessment of antidumping duties on entries of merchandise covered by this review and for future deposits of estimated duties.

The following deposit requirements will be effective upon completion of the final results of this administrative review for all shipments of certain cold-rolled carbon steel flat products from the Netherlands entered, or withdrawn from warehouse, for consumption on or after the publication date of the final results of this administrative review, as provided by section 751(a)(1) of the Act and 19 CFR 353.26: (1) the cash deposit rate for Hoogovens will be the rate established in the final results of this administrative review; (2) if the exporter is a firm not covered in this review, but the manufacturer is Hoogovens, the cash deposit rate will be that established for Hoogovens in the final results of this review; and (3) if neither the exporter nor the manufacturer is a firm covered in this review, the cash deposit rate will be 19.32 percent, the ''all others'' rate established after remand in the LTFV investigation.

These deposit requirements, when imposed, shall remain in effect until publication of the final results of the next administrative review.

This administrative review and notice are in accordance with section 751(a)(1) of the Act and 19 CFR 353.22.

Dated: September 27, 1996.

Barbara R. Stafford

Acting Assistant Secretary for Import Administration.

[FR Doc. 96–25538 Filed 10–3–96; 8:45 am]

BILLING CODE 3510–DS–P

[A–122–822; A–122–823]

Certain Corrosion-Resistant Carbon Steel Flat Products and Certain Cut-to-Length Carbon Steel Plate From Canada: Preliminary Results of Antidumping Duty Administrative Reviews

AGENCY: Import Administration, International Trade Administration, Department of Commerce.

ACTION: Notice of preliminary results of Antidumping Duty Administrative Reviews.

SUMMARY: In response to requests from interested parties, the Department of Commerce (the Department) is conducting administrative reviews of the antidumping duty orders on certain corrosion-resistant carbon steel flat

products and certain cut-to-length carbon steel plate from Canada. These reviews cover four manufacturers/exporters of the subject merchandise to the United States and the period August 1, 1994 through July 31, 1995.

We have preliminarily determined that sales have been made below normal value (''NV'') by various companies subject to these reviews. If these preliminary results are adopted in our final results of these administrative reviews, we will instruct U.S. Customs to assess antidumping duties based on the difference between the export price (''EP'') or constructed export price (''CEP'') and the NV.

EFFECTIVE DATE: October 4, 1996.

FOR FURTHER INFORMATION CONTACT: Robert Bolling (Continuous Colour Coat (''CCC'')), Eric Johnson (Dofasco Inc. and Sorevco Inc. (''Dofasco'')), Daniel Miller (Algoma, Inc. (''Algoma'')), N. Gerard Zapiain (Stelco, Inc. (''Stelco'')), or Jean Kemp, Import Administration, International Trade Administration, U.S. Department of Commerce, 14th Street and Constitution Avenue, NW., Washington, DC 20230; telephone: (202) 482–3793.

SUPPLEMENTARY INFORMATION:

The Applicable Statute

Unless otherwise indicated, all citations to the statute refer to the provisions effective January 1, 1995, the effective date of the amendments made to the Tariff Act of 1930 (the Act) by the Uruguay Round Agreements Act (URAA). In addition, unless otherwise indicated, all citations to the Department's regulations are to the current regulations, as amended by the interim regulations published in the Federal Register on May 11, 1995 (60 FR 25130).

Background

On August 19, 1993, the Department published in the Federal Register (58 FR 44162) the antidumping duty orders on certain corrosion-resistant carbon steel flat products and certain cut-to-length carbon steel plate from Canada. On August 29, 1995, Algoma (cut-to-length steel plate) requested review of its exports of subject merchandise. On August 31, 1995, the following companies also requested reviews for their exports of subject merchandise: CCC (corrosion-resistant steel), Dofasco (corrosion-resistant steel), and Stelco (corrosion-resistant steel and cut-to-length steel plate). Manitoba Rolling Mills (''MRM'') also requested a review, but subsequently withdrew its request. We therefore terminate MRM's review with this notice. On August 31, 1995, Bethlehem Steel Corporation, U.S. Steel Group (a Unit of USX Corporation), Inland Steel Industries Inc., Gulf States Steel Inc. of Alabama, Sharon Steel Corporation, Geneva Steel, and Lukens Steel Company, petitioners, requested reviews of the above four respondents (but not MRM) and both classes or kinds of merchandise. On September 9, 1995, in accordance with 19 CFR 353.22(c), we initiated administrative reviews of these orders for the period August 1, 1994, through July 31, 1995 (60 FR 46818).

On February 28, 1996, the petitioners requested that the Department determine whether antidumping duties had been absorbed by Algoma, Dofasco, and Stelco (for corrosion-resistant only) during the POR, pursuant to section 751(a)(4) of the Act. Section 751(a)(4) provides that the Department, if requested, will determine during an administrative review initiated two years or four years after publication of the order whether antidumping duties have been absorbed by a foreign producer or exporter subject to the order if the subject merchandise is sold in the United States through an importer who is affiliated with such foreign producer or exporter. Section 751(a)(4) was added to the Act by the URAA.

For transition orders as defined in section 751(c)(6)(C) of the Act, *i.e.*, orders in effect as of January 1, 1995, section 351.213(j)(2) of the Department's proposed regulations provides that the Department will make a duty absorption determination, if requested, for any administrative review initiated in 1996 or 1998. *See Notice of Proposed Rulemaking and Request for Public Comments*, 61 FR 7308, 7366 (February 27, 1996) (''Proposed Regulations''). The commentary to the proposed regulations explains that reviews initiated in 1996 will be considered initiated in the second year and reviews initiated in 1998 will be considered initiated in the fourth year. *Id.* at 7317. Although these proposed regulations are not yet binding upon the Department, they do constitute a public statement of how the Department expects to proceed in construing section 751(a)(4) of the amended statute. This approach assures that interested parties will have the opportunity to request a duty absorption determination on entries for which the second and fourth years following an order have already passed, prior to the time for sunset review of the order under section 751(c). Because the orders on corrosion-resistant carbon steel flat products and cut-to-length carbon steel plate from Canada have been in effect since 1993, these are transition orders. Therefore, based on the policy stated above, the Department will first consider a request for a duty absorption determination for reviews of these orders initiated in 1996. Because this review was initiated in 1995, we have not considered the issue of absorption in this review. However, if requested, we will do so in the next review.

Under the Act, the Department may extend the deadline for completion of administrative reviews if it determines that it is not practicable to complete the review within the statutory time limit of 365 days. On April 1, 1996, the Department extended the time limits for the preliminary and final results in this case. *See Extension of Time Limit for Antidumping Duty Administrative Reviews*, 61 FR 14291 (1996). The new deadline for the final results of review is April 2, 1997.

The Department is conducting these reviews in accordance with section 751 of the Act.

Scope of Reviews

The products covered by these administrative reviews constitute two separate ''classes or kinds'' of merchandise: (1) certain corrosion-resistant steel and (2) certain cut-to-length plate.

The first class or kind, certain corrosion-resistant steel, includes flat-rolled carbon steel products of rectangular shape, either clad, plated, or coated with corrosion-resistant metals such as zinc, aluminum, or zinc-, aluminum-, nickel- or iron-based alloys, whether or not corrugated or painted, varnished or coated with plastics or other nonmetallic substances in addition to the metallic coating, in coils (whether or not in successively superimposed layers) and of a width of 0.5 inch or greater, or in straight lengths which, if of a thickness less than 4.75 millimeters, are of a width of 0.5 inch or greater and which measures at least 10 times the thickness or if of a thickness of 4.75 millimeters or more are of a width which exceeds 150 millimeters and measures at least twice the thickness, as currently classifiable in the Harmonized Tariff Schedule (HTS) under item numbers 7210.31.0000, 7210.39.0000, 7210.41.0000, 7210.49.0030, 7210.49.0090, 7210.60.0000, 7210.70.6030, 7210.70.6060, 7210.70.6090, 7210.90.1000, 7210.90.6000, 7210.90.9000, 7212.21.0000, 7212.29.0000, 7212.30.1030, 7212.30.1090, 7212.30.3000, 7212.30.5000, 7212.40.1000, 7212.40.5000, 7212.50.0000, 7212.60.0000, 7215.90.1000, 7215.90.5000, 7217.12.1000, 7217.13.1000, 7217.19.1000,

7217.19.5000, 7217.22.5000, 7217.23.5000, 7217.29.1000, 7217.29.5000, 7217.32.5000, 7217.33.5000, 7217.39.1000, and 7217.39.5000. Included are flat-rolled products of non-rectangular cross-section where such cross-section is achieved subsequent to the rolling process (*i.e.*, products which have been worked after rolling)—for example, products which have been beveled or rounded at the edges. Excluded are flat-rolled steel products either plated or coated with tin, lead, chromium, chromium oxides, both tin and lead (''terne plate''), or both chromium and chromium oxides (''tin-free steel''), whether or not painted, varnished or coated with plastics or other nonmetallic substances in addition to the metallic coating. Also excluded are clad products in straight lengths of 0.1875 inch or more in composite thickness and of a width which exceeds 150 millimeters and measures at least twice the thickness. Also excluded are certain clad stainless flat-rolled products, which are three-layered corrosion-resistant carbon steel flat-rolled products less than 4.75 millimeters in composite thickness that consist of a carbon steel flat-rolled product clad on both sides with stainless steel in a 20%-60%-20% ratio. These HTS item numbers are provided for convenience and Customs purposes. The written description remains dispositive.

The second class or kind, certain cut-to-length plate, includes hot-rolled carbon steel universal mill plates (*i.e.*, flat-rolled products rolled on four faces or in a closed box pass, of a width exceeding 150 millimeters but not exceeding 1,250 millimeters and of a thickness of not less than 4 millimeters, not in coils and without patterns in relief), of rectangular shape, neither clad, plated nor coated with metal, whether or not painted, varnished, or coated with plastics or other nonmetallic substances; and certain hot-rolled carbon steel flat-rolled products in straight lengths, of rectangular shape, hot rolled, neither clad, plated, nor coated with metal, whether or not painted, varnished, or coated with plastics or other nonmetallic substances, 4.75 millimeters or more in thickness and of a width which exceeds 150 millimeters and measures at least twice the thickness, as currently classifiable in the HTS under item numbers 7208.31.0000, 7208.32.0000, 7208.33.1000, 7208.33.5000, 7208.41.0000, 7208.42.0000, 7208.43.0000, 7208.90.0000, 7210.70.3000, 7210.90.9000, 7211.11.0000, 7211.12.0000, 7211.21.0000, 7211.22.0045, 7211.90.0000, 7212.40.1000, 7212.40.5000, and 7212.50.0000. Included are flat-rolled products of non-rectangular cross-section where such cross-section is achieved subsequent to the rolling process (*i.e.*, products which have been worked after rolling) —for example, products which have been beveled or rounded at the edges. Excluded is grade X–70 plate. These HTS item numbers are provided for convenience and Customs purposes. The written description remains dispositive.

The period of review (POR) is August 1, 1994, through July 31, 1995.

Verification

As provided in section 782(i) of the Act, we verified information provided by respondents, using standard verification procedures, including on-site inspection of the manufacturer's facilities, the examination of relevant sales and financial records, and selection of original documentation containing relevant information. Our verification results are outlined in the public versions of the verification reports.

Product Comparisons

In accordance with section 771(16) of the Act, we considered all products produced by the respondent, covered by the description in the *Scope of the Review* section, above, and sold in the home market during the POR, to be foreign like products for purposes of determining appropriate product comparisons to U.S. sales. Where there were no sales of identical merchandise in the home market to compare to U.S. sales, we compared U.S. sales to the next most similar foreign like product on the basis of the characteristics listed in Appendix III of the Department's September 14, 1995 antidumping questionnaire. In making the product comparisons, we matched foreign like products based on the physical characteristics reported by the respondent and verified by the Department.

Fair Value Comparisons

To determine whether sales of subject merchandise to the United States were made at less than fair value, we compared the EP or CEP to the NV, as described in the ''Export Price and Constructed Export Price'' and ''Normal Value'' sections of this notice. In accordance with section 777A(d)(2), we calculated monthly weighted-average prices for NV and compared these to individual U.S. transactions.

Export Price and Constructed Export Price

For calculation of the price to the United States, we used EP, in accordance with subsections 772(a) and (c) of the Act where the subject merchandise was sold directly or indirectly to the first unaffiliated purchaser in the United States prior to importation and CEP was not otherwise warranted based on the facts of record. In addition, we used CEP in accordance with subsections 772 (b), (c), and (d) of the Act, as appropriate, for those sales that took place after importation into the United States.

Algoma

The Department calculated EP for Algoma. EP was based on packed, prepaid or delivered prices to customers in the United States. We made adjustments to the starting price for movement expenses (foreign and U.S. movement, brokerage and handling, and U.S. Customs duties).

We used Algoma's date of invoice as the date of sale for both U.S. sales and home market sales because that was the date when price and quantity are fixed.

CCC

The Department calculated EP for CCC. EP was based on packed, prepaid or delivered prices to customers in the United States.

We made deductions to the starting price for movement expenses (foreign movement, brokerage and handling, and U.S. Customs duties), and for discounts and rebates.

We used CCC's date of invoice as the date of sale for U.S. sales because that was the date when price and quantity were fixed.

Dofasco

For purposes of these reviews, we treated Dofasco, Inc. and Sorevco, Inc. as one respondent (*see Certain Corrosion Resistant Carbon Steel Flat Products from Canada; Final Determination of Sales at Less than Fair Value,* 58 FR 37099 (1993), and *Preliminary Results of Antidumping Duty Administrative Review,* 60 FR 42511 (1995)). These companies have submitted no information which would cause us to question that treatment. The Department calculated EP for Dofasco. EP was based on packed prices to customers in the United States.

We made deductions to the starting price for discounts, a rebate, movement expenses, and U.S. Customs duty and brokerage. As in the prior review, U.S. further processing expenses for certain sales have not been treated as part of the export price.

For Dofasco, Inc., we used the date of order acknowledgment as date of sale for all sales in both the U.S. and the home market (except sales made pursuant to long-term contracts) because this was the time at which price and quantity were fixed. For Dofasco, Inc.'s sales made pursuant to long-term contracts, we used date of the contract as date of sale because the contract terms fixed price and quantity.

For Sorevco, Inc., we used the date of order confirmation as the date of sale because both price and quantity are fixed in its order acknowledgments. When Sorevco shipped more merchandise than the customer ordered, but which the customer accepted, and such overages were in excess of accepted industry tolerances, we used date of shipment as date of sale for the excess merchandise.

Stelco

Corrosion-resistant products: We calculated EP or CEP, as appropriate, based on the packed price to unaffiliated purchasers in, or for exportation to, the United States. We made deductions to the starting price for movement expenses including freight, U.S. transportation expenses, brokerage and handling, U.S. Customs duties and warehousing.

In accordance with section 772(d)(1) of the Act and the Statement of Administrative Action (SAA) which accompanied the passage of the URAA (at 823–824), for CEP we also deducted selling expenses associated with economic activities occurring in the United States, including credit, technical services, other direct selling expenses, indirect selling expenses, and inventory carrying costs. Finally, we made an adjustment for an amount of profit allocated to these expenses in accordance with section 772(d)(3) of the Act.

We used Stelco's date of invoice as the date of sale for both EP and CEP corrosion-resistant sales because that was the date when price and quantity were fixed.

Plate: We calculated EP based on the packed price to unaffiliated purchasers in, or for exportation, to the United States. We made deductions for movement expenses including foreign movement, brokerage and handling, U.S. Customs duty and warehousing. We made no other adjustments for EP.

We used the date of invoice as the date of sale for plate sales because that was the date when price and quantity were fixed.

Normal Value

The Department determines the viability of the home market as the comparison market by comparing the aggregate quantity of home market and U.S. sales. We found that each company's quantity of sales in its home market exceeded five percent of its sales to the U.S. Moreover, there is no evidence on the record supporting a particular market situation in the exporting country that would not permit a proper comparison of home market and U.S. prices. We, therefore, have determined that each company's home market sales are viable for purposes of comparison with sales of the subject merchandise to the United States, pursuant to section 773(a) of the Act. Therefore, in accordance with section 773(a)(1)(B)(i) of the Act, we based NV on the prices at which the foreign like products were first sold for consumption in the home market, in the usual commercial quantities and in the ordinary course of trade.

We used sales to affiliated customers only where we determined such sales were made at arm's-length prices, *i.e.*, at prices comparable to prices at which the firm sold identical merchandise to unrelated customers.

Because the Department disregarded sales below the cost of production (''COP'') in the last completed review with respect to CCC and Stelco for both the classes or kinds of merchandise under review (*see Certain Corrosion-Resistant Carbon Steel Flat Products and Certain Cut-to-Length Carbon Steel Plate from Canada; Final Results of Antidumping Duty Administrative Reviews* 61 FR 13815 (March 28, 1996)), we had reasonable grounds to believe or suspect that sales of the foreign like product under consideration for the determination of NV in this review may have been made at prices below the COP as provided by section 773(b)(2)(A)(ii) of the Act. Therefore, pursuant to section 773(b)(1) of the Act, we initiated COP investigations of sales by CCC and Stelco in the home market. On January 11, 1996, petitioners alleged that Algoma and Dofasco made home market sales of subject merchandise below COP. On January 26, 1996, we initiated COP investigations of sales by Algoma and Dofasco.

We compared sales of the foreign like product in the home market with the model-specific cost of production figure for the POR (''COP''). In accordance with section 773(b)(3) of the Act, we calculated the COP based on the sum of the costs of materials and fabrication employed in producing the foreign like product plus selling, general and administrative (SG&A) expenses and all costs and expenses incidental to placing the foreign like product in condition packed and ready for shipment. In our COP analysis, we used home market sales and COP information provided by each respondent in its questionnaire responses.

After calculating COP, we tested whether home market sales of subject merchandise were made at prices below COP and, if so, whether they were made within an extended period of time in substantial quantities, at prices that did not permit recovery of all costs within a reasonable period of time. Because each individual price was compared against the POR-long average COP, any sales that were below cost were also not at prices which permitted cost recovery within a reasonable period of time. We compared model-specific COPs to the reported home market prices less any applicable movement charges, discounts, and rebates.

Pursuant to section 773(b)(2)(C) of the Act, where less than 20 percent of a respondent's sales of a given product were at prices less than COP, we did not disregard any below-cost sales of that product because the below-cost sales were not made in substantial quantities within an extended period of time. Where 20 percent or more of a respondent's sales of a given product during the POR were at prices less than the weighted-average COPs for the POR, we disregarded the below-cost sales because they were made within an extended period of time in substantial quantities in accordance with sections 773(b)(2) (B) and (C) of the Act, and were at prices which would not permit recovery of all costs within a reasonable period of time in accordance with section 773(b)(2)(D) of the Act. Based on this test, we disregarded some below-cost sales with respect to all of the above companies and classes or kinds of merchandise.

In accordance with section 773(a)(1)(B)(i) of the Act, we based NV on sales at the same level of trade (''LOT'') as the EP or CEP. If NV was calculated at a different level of trade, we made an additional adjustment, if appropriate and if possible, in accordance with section 773(a)(7) of the Act. (See *Level of Trade* below.)

In accordance with section 773(a)(4) of the Act, we used CV as the basis for NV when there were no usable sales of the foreign like product in the comparison market. We calculated CV in accordance with section 773(e) of the Act. We included the cost of materials and fabrication, SG&A expenses, and profit. In accordance with section 773(e)(2)(A) of the Act, we based SG&A

expenses and profit on the amounts incurred and realized by the respondent in connection with the production and sale of the foreign like product in the ordinary course of trade for consumption in the foreign country. For selling expenses, we used the weighted-average home market selling expenses.

Where appropriate, we made adjustments to CV in accordance with section 773(a)(8) of the Act and 19 CFR 353.56 for circumstance of sale (COS) differences. For comparisons to EP, we made COS adjustments by deducting home market direct selling expenses and adding U.S. direct selling expenses. For comparisons to CEP, we made COS adjustments by deducting home market direct selling expenses and adding U.S. direct selling expenses except those deducted from the starting price in calculating CEP pursuant to section 772(d) of the Act. We also made adjustments, where applicable, for home market indirect selling expenses to offset U.S. commissions in EP and CEP comparisons.

Algoma

For those models for which there was a sufficient quantity of sales at prices above COP, we based NV on home market prices to unaffiliated purchasers (Algoma made no home market sales to affiliated parties), in accordance with 19 CFR 353.45(a). Home market prices were based on the packed, ex-factory or delivered prices to unaffiliated purchasers in the home market. We deducted discounts and rebates. We made adjustments, where applicable, for differences in packing and movement expenses in accordance with sections 773(a)(6) (A) and (B) of the Act. We also made adjustments for differences in cost attributable to differences in physical characteristics of the merchandise pursuant to section 773(a)(6)(C)(ii) of the Act and for differences in circumstances of sale (''COS'') in accordance with 773(a)(6)(C)(iii) of the Act and 19 CFR 353.56. For comparison to EP, we made COS adjustments by deducting home market direct selling expenses and adding U.S. direct selling expenses. These included direct selling expenses (credit and warranty) in the home market and credit and warranty expenses in the U.S. market. When comparisons were made to EP sales on which commissions were paid, we made adjustments for home market indirect selling expenses to offset these U.S. commissions.

CCC

For those models for which there was a sufficient quantity of sales at prices above COP, we based NV on home market prices to affiliated or unaffiliated parties, in accordance with 19 CFR 353.45(a). Home market prices were based on the packed, ex-factory or delivered prices to affiliated or unaffiliated purchasers in the home market. We made adjustments, where applicable, for packing and movement expenses in accordance with sections 773(a)(6) (A) and (B) of the Act. We adjusted for discounts and rebates. We also made adjustments for differences in cost attributable to differences in physical characteristics of the merchandise pursuant to section 773(a)(6)(C)(ii) of the Act and for COS differences in accordance with 773(a)(6)(C)(iii) of the Act and 19 CFR 353.56. For comparison to EP, we made COS adjustments by deducting home market direct selling expenses (credit) and adding U.S. direct selling expenses (credit). When comparisons were made where commissions were paid on EP sales, we made adjustments for home market indirect selling expenses to offset U.S. commissions.

Dofasco

For those models for which there was a sufficient quantity of sales at prices above COP, we based NV on home market prices to affiliated (when made at prices determined to be arm's-length) or unaffiliated parties, in accordance with 19 CFR 353.45(a). Home market prices were based on the packed, ex-factory or delivered prices to affiliated or unaffiliated purchasers in the home market. We deducted discounts and rebates. We made adjustments, where applicable, for packing and movement expenses in accordance with sections 773(a)(6) (A) and (B) of the Act. We also made adjustments for differences in cost attributable to differences in physical characteristics of the merchandise pursuant to section 773(a)(6)(C)(ii) of the Act and for COS differences in accordance with 773(a)(6)(C)(iii) of the Act and 19 CFR 353.56. For comparison to EP, we made COS adjustments by deducting home market direct selling expenses (credit, royalties and warranty expenses) and adding U.S. direct selling expenses (credit, royalties and warranty expenses). When comparisons were made where commissions were paid on EP sales, we made adjustments for home market indirect selling expenses to offset U.S. commissions.

Stelco

For those models for which there was a sufficient quantity of sales at prices above COP, we based NV on home market prices to affiliated or unaffiliated parties, in accordance with 19 CFR 353.45(a). Home market prices were based on the packed, ex-factory or delivered prices to affiliated or unaffiliated purchasers in the home market. We made deductions for discounts and rebates. We made adjustments, where applicable, for packing and movement expenses, in accordance with sections 773(a)(6) (A) and (B) of the Act. We also made adjustments for differences in cost attributable to differences in physical characteristics of the merchandise pursuant to section 773(a)(6)(C)(ii) of the Act and for COS differences in accordance with 773(a)(6)(C)(iii) of the Act and 19 CFR 353.56.

Corrosion resistant steel: We adjusted home market prices for interest revenue on certain sales to one customer. For comparison to EP, we made COS adjustments by deducting home market direct selling expenses (credit, warranties, technical services) and adding U.S. direct selling expenses (credit, technical services and other direct selling expenses). For comparisons to CEP, we made COS adjustments by deducting home market direct selling expenses and adding U.S. direct selling expenses except those deducted from the starting price in calculating CEP pursuant to section 772(d) of the Act.

Plate: For comparison to EP, we made COS adjustments by deducting home market direct selling expenses (commissions, credit, warranties, technical services) and adding U.S. direct selling expenses (credit, technical services and other direct selling expenses).

Level of Trade (''LOT'')

As set forth in section 773(a)(1)(B)(i) of the Act and in the SAA accompanying the URAA at 829–831, to the extent practicable, the Department will calculate NV based on sales at the same level of trade as the U.S. sale. When the Department is unable to find sale(s) in the comparison market at the same level of trade as the U.S. sale(s), the Department may compare sales in the U.S. and foreign markets at a different level of trade. *See Final Determination of Sales at Less than Fair Value; Certain Pasta from Italy,* 61 FR 30326 (June 14, 1996).

In accordance with section 773(a)(7)(A) of the Act, if we compare U.S. sales at one level of trade to NV sales at a different level of trade, the Department will adjust the NV to account for the difference in level of trade if two conditions are met. First, there must be differences between the actual selling functions performed by the seller at the level of trade of the U.S. sale and the level of trade of the normal

value sale. Second, the difference must affect price comparability as evidenced by a pattern of consistent price differences between sales at the different levels of trade in the market in which NV is determined.

When CEP is applicable, section 773(a)(7)(B) of the Act establishes the procedures for making a CEP offset when: (1) NV is at a more advanced level of trade, and (2) the data available does not provide an appropriate basis for a level of trade adjustment.

In order to determine that there is a difference in level of trade, the Department must find that two sales have been made at different phases of marketing, or the equivalent. Different phases of marketing necessarily involve differences in selling functions, but differences in selling functions (even substantial ones) are not alone sufficient to establish a difference in the level of trade. Similarly, seller and customer descriptions (such as ''distributor'' and ''wholesaler'') are useful in identifying different levels of trade, but are insufficient to establish that there is a difference in the level of trade.

In implementing this principle in these reviews, we obtained information about the selling activities of the producers/exporters associated with each phase of marketing, or the equivalent. We asked each respondent to establish any claimed LOTs based on these marketing activities and selling functions.

In reviewing the selling functions reported by the respondents, we considered all types of selling activities that had been performed on both a qualitative and quantitative basis. In analyzing whether separate LOTs existed in these reviews, we found that no single selling activity in the flat-rolled steel industry was sufficient to warrant a separate LOT (*see Proposed Regulations*, 61 FR, at 7348).

To test the claimed LOTs, we analyzed the selling activities associated with the classes of customers and marketing phases respondents reported. In applying this test, we expect that, if claimed LOTs are the same, the functions and activities of the seller should be similar. Conversely, if a party claims that LOTs are different for different groups of sales, the functions and activities of the seller should be dissimilar. The Department does not only count activities, but weighs the overall function performed by each claimed level of trade. In determining whether separate LOTs existed in the home market, pursuant to section 773(a)(1)(B)(i) of the Act, we considered the selling functions reflected in the starting price of the home market sales before any adjustment. In identifying the LOT for CEP sales, we considered only the selling activities reflected in the U.S. price after deduction of expenses and profit under section 772(d) of the Act.

Algoma

Algoma reported one LOT and one channel of distribution with two classes of customers: end-users and steel service centers (SSCs) in both the home market and the United States. Algoma sells all of its material directly to the customer. Every order is custom made. We examined the selling functions performed for both classes of customers in both markets. We found that Algoma's selling activities were substantially similar for both classes of customers for sales of subject merchandise and, therefore, warrant one level of trade. Thus, no adjustment was appropriate.

CCC

CCC reported three different LOTs in the home market: original equipment manufacturers (OEMs), steel service centers, and scrap merchants. However, we examined and verified the reported selling functions and found that CCC provides the same selling functions to its home market customers regardless of distribution level, marketing phase, or the equivalent. Overall, we determine that the selling functions between the reported LOTs are sufficiently similar to consider them as one LOT in the comparison market.

CCC stated that it sells to two LOTs in the United States: OEMs and steel service centers. Again, we examined the selling functions at both claimed levels, and found they were the same. Therefore, we determine that the selling functions between the reported LOTs are sufficiently similar to consider them as one LOT in the United States market. Finally, we compared the selling functions performed at the home market LOT and the LOT in the United States and found them substantially similar. Therefore, no adjustment is appropriate.

Dofasco

Dofasco reported four LOTs in the home market. Dofasco defined its LOT categories by customer category: service center, automotive, construction, and ''others.'' We examined and verified the selling functions performed at each claimed level and found that, of 14 selling functions, the automotive and service center sales levels only overlapped with respect to two selling functions. Moreover, Dofasco has established a separate sales division for its automotive sales. Therefore, given these types of differences, we conclude that these are separate levels of trade.

Between the automotive and construction sales channels, Dofasco performed only five of the same or similar selling functions. The activities differed with respect to numerous other activities. We have concluded that the extent of these similar selling activities, taken as a whole, is not sufficient to consider these the same level of trade.

Between the construction and service center sales channels, Dofasco performed eight of the same or similar selling functions. The activities differed in numerous other areas. Again, we do not conclude that the extent of these similar activities, taken as a whole, renders these the same level of trade.

However, between the construction and ''other'' sales channels, the selling functions performed overlapped with respect to eleven of the fourteen selling functions analyzed.

Overall, we determine that the selling functions between the construction and ''other'' sales channels are sufficiently similar to consider them a single LOT in the comparison market. For the automotive, service center, and construction/''other'' customer categories, we determine that the selling functions between these sales channels are not sufficiently similar to consider them as the same LOT in the comparison market. Therefore, we determine that the automotive, service center, and construction/''other'' customer categories should be treated as three LOTs in the comparison market.

Respondents reported four LOTs in the U.S. market: automotive, service center, construction, and ''other.'' The only difference in selling functions between the comparison market and the U.S. market are as follows: for certain sales to construction customers in the U.S. market, one selling activity is offered which is not offered to home market construction customers; and for certain other sales to construction customers, there is one selling function which is not provided in the U.S. market but which is offered in the comparison market.

We determine that the results of our analysis of U.S. LOTs are identical to those of the comparison market—there are three LOTs in the U.S. market: automotive, service center, and construction/''other.''

Stelco

Stelco identified one level of trade and two phases of marketing (to end-users or to resellers) in the home market for each class or kind of merchandise. We examined and verified the selling functions performed in each phase and

found that Stelco provided many of the same or similar selling functions in each, including: inventory maintenance, after sales service, technical advice, and freight and delivery arrangements. We found few differences between selling functions for transactions made through the two channels of trade and that Stelco's prices did not vary consistently based on the type of customer. Overall, we determine that the selling functions between the two sales channels are sufficiently similar to consider them one LOT in the comparison market for sales of both corrosion-resistant products and plate products.

In the United States, Stelco sold both products through one sales channel and to one class of customer: corrosion-resistant products were sold only to end users and plate products were sold to service centers in the United States. For EP sales, we determine that the results of our analysis of U.S. LOTs are identical to those of the comparison market: the selling functions performed for sales to the United States are sufficiently similar to consider them one LOT for both corrosion-resistant products and plate products. Additionally, we consider this LOT to be the same as that identified in the comparison market. Therefore, no adjustment is appropriate. For CEP sales, we compared the selling activities associated with the sale to the affiliated reseller to those associated with the home market level of trade and found them to be dissimilar. For example, the level of trade of the CEP sales involved no after sales services, or technical advice. Therefore, we considered the home market sales to be at a different level of trade and at a more advanced stage of distribution than the CEP. Because the sole home market level of trade was different from the level of trade of the CEP, we could not match to sales at the same level of trade in the home market nor could we determine a level-of-trade adjustment based on Stelco's home market sales of merchandise under review. Furthermore, we have no other information that provides an appropriate basis for determining a level-of-trade adjustment. Accordingly, for Stelco, we determined NV at the sole home market level of trade and made a CEP offset adjustment in accordance with section 773(a)(7)(b) of the Act.

Preliminary Results of Reviews

As a result of our reviews, we preliminarily determine the weighted-average dumping margins (in percent) for the period August 1, 1994, through July 31, 1995 to be as follows:

Manufacturer/Exporter	Margin (percent)
Corrosion-Resistant Steel:	
Dofasco	0.84
CCC	1.01
Stelco	0.45
Cut-to-Length Plate:	
Algoma	0.70
Stelco	0

Parties to this proceeding may request disclosure within 5 days of the date of publication of this notice. Any interested party may request a hearing within 10 days of the date of publication of this notice. Any hearing, if requested, will be held 44 days after the date of publication or the first business day thereafter. Case briefs and/or other written comments from interested parties may be submitted not later than 30 days after the date of publication. Rebuttal briefs and rebuttals to written comments, limited to issues raised in those comments, may be filed not later than 37 days after the date of publication of this notice. The Department will publish the final results of this administrative review, including its analysis of issues raised in any written comments or at a hearing, not later than 180 days after the date of publication of this notice.

Upon issuance of the final results of review, the Department shall determine, and the U.S. Customs Service shall assess, antidumping duties on all appropriate entries. Because the inability to link sales with specific entries prevents calculation of duties on an entry-by-entry basis, we will calculate an importer-specific *ad valorem* duty assessment rate for each class or kind of merchandise based on the ratio of the total amount of antidumping duties calculated for the examined sales made during the POR to the total customs value of the sales used to calculate those duties. This rate will be assessed uniformly on all entries of that particular importer made during the POR. (This is equivalent to dividing the total amount of antidumping duties, which are calculated by taking the difference between statutory NV and statutory EP or CEP, by the total statutory EP or CEP value of the sales compared, and adjusting the result by the average difference between EP or CEP and customs value for all merchandise examined during the POR).

Furthermore, the following deposit requirements will be effective for all shipments of the subject merchandise entered, or withdrawn from warehouse, for consumption on or after the publication date of the final results of these administrative reviews, as provided by section 751(a)(1) of the Act: (1) the cash deposit rates for the reviewed companies will be those rates established in the final results of these reviews (except that no deposit will be required for firms with zero or *de minimis* margins, *i.e.*, margins less than 0.5 percent); (2) for previously reviewed or investigated companies not listed above, the cash deposit rate will continue to be the company-specific rate published for the most recent period; (3) if the exporter is not a firm covered in this review, a prior review, or the original less-than-fair-value (''LTFV'') investigation, but the manufacturer is, the cash deposit rate will be the rate established for the most recent period for the manufacturer of the merchandise; and (4) the cash deposit rate for all other manufacturers or exporters will continue to be the ''all others'' rate made effective by the final results of the 1993–1994 administrative reviews of these orders (see *Certain Corrosion-Resistant Carbon Steel Flat Products and Certain Cut-to-Length Carbon Steel Plate From Canada; Final Results of Antidumping Duty Administrative Reviews,* 61 FR 13815 (March 28, 1996)). As noted in those final results, these rates are the ''all others'' rates from the relevant LTFV investigations which were 18.71 percent for corrosion-resistant steel products and 61.88 percent for plate (*see Amended Final Determination,* 60 FR 49582 (September 26, 1995)). These deposit requirements, when imposed, shall remain in effect until publication of the final results of the next administrative reviews.

This notice also serves as a preliminary reminder to importers of their responsibility under 19 CFR 353.26 to file a certificate regarding the reimbursement of antidumping duties prior to liquidation of the relevant entries during this review period. Failure to comply with this requirement could result in the Secretary's presumption that reimbursement of antidumping duties occurred and the subsequent assessment of double antidumping duties.

These administrative reviews and notice are in accordance with section 751(a)(1) of the Act (19 U.S.C. 1675(a)(1)) and 19 CFR 353.22(c)(5).

Dated: September 25, 1996.

Robert S. LaRussa,

Acting Assistant Secretary for Import Administration.

[FR Doc. 96–25533 Filed 10–3–96; 8:45 am]

BILLING CODE 3510–DS–P

[A–401–805]

Certain Cut-to-Length Carbon Steel Plate From Sweden: Preliminary Results of Antidumping Duty Administrative Review

AGENCY: Import Administration, International Trade Administration, Department of Commerce.

ACTION: Notice of preliminary results of antidumping duty administrative review.

SUMMARY: In response to requests from interested parties, the Department of Commerce (the Department) is conducting an administrative review of the antidumping duty order on certain cut-to-length carbon steel plate from Sweden. This review covers one manufacturer/exporter of the subject merchandise to the United States and the period August 1, 1994 through July 31, 1995.

We have preliminarily determined that sales have been made below normal value (NV) by the company subject to this review. If these preliminary results are adopted in our final results of these administrative review, we will instruct U.S. Customs to assess antidumping duties equal to the difference between the export price (EP) or constructed export price (CEP) and the NV.

We invite interested parties to comment on these preliminary results. Parties who submit comments in this proceeding are requested to submit with each argument (1) a statement of the issue and (2) a brief summary of the argument.

EFFECTIVE DATE: October 4, 1996.

FOR FURTHER INFORMATION CONTACT: Elizabeth Patience or Jean Kemp, Import Administration, International Trade Administration, U.S. Department of Commerce, 14th Street and Constitution Avenue, N.W., Washington, D.C. 20230; telephone: (202) 482–3793.

SUPPLEMENTARY INFORMATION:

The Applicable Statute

Unless otherwise indicated, all citations to the Tariff Act of 1930, as amended (the Act), are references to the provisions effective January 1, 1995, the effective date of the amendments made to the Act by the Uruguay Round Agreements Act (URAA).

Background

On August 19, 1993, the Department published in the Federal Register (58 FR 44162) the antidumping duty order on certain cut-to-length carbon steel plate from Sweden. On August 31, 1995, Bethlehem Steel Corporation, U.S. Steel Group (a Unit of USX Corporation), Inland Steel Industries Inc., Gulf States Steel Inc. of Alabama, Sharon Steel Corporation, Geneva Steel, and Lukens Steel Company, petitioners, requested a review for SSAB Svenskt Stål AB (SSAB). On August 31, 1995, SSAB also requested a review for its exports of subject merchandise. On September 9, 1995, in accordance with 19 C.F.R. 353.22(c), we initiated the administrative review of this order for the period August 1, 1994, through July 31, 1995 (60 FR 46818). The Department is now conducting this administrative review in accordance with section 751(a) of the Act.

SSAB's two affiliated steel producing companies, SSAB Oxelösund AB (SSOX) and SSAB Tunnplåt AB (SSTP), produced the subject merchandise at three production facilities. The SSOX facility was the source of all subject merchandise sold in the US and the vast majority of potential matches.

Scope of Review

Certain cut-to-length plate includes hot-rolled carbon steel universal mill plates (*i.e.*, flat-rolled products rolled on four faces or in a closed box pass, of a width exceeding 150 millimeters but not exceeding 1,250 millimeters and of a thickness of not less than 4 millimeters, not in coils and without patterns in relief), of rectangular shape, neither clad, plated nor coated with metal, whether or not painted, varnished, or coated with plastics or other nonmetallic substances; and certain hot-rolled carbon steel flat-rolled products in straight lengths, of rectangular shape, hot rolled, neither clad, plated, nor coated with metal, whether or not painted, varnished, or coated with plastics or other nonmetallic substances, 4.75 millimeters or more in thickness and of a width which exceeds 150 millimeters and measures at least twice the thickness, as currently classifiable in the HTS under item numbers 7208.31.0000, 7208.32.0000, 7208.33.1000, 7208.33.5000, 7208.41.0000, 7208.42.0000, 7208.43.0000, 7208.90.0000, 7210.70.3000, 7210.90.9000, 7211.11.0000, 7211.12.0000, 7211.21.0000, 7211.22.0045, 7211.90.0000, 7212.40.1000, 7212.40.5000, and 7212.50.0000. Included are flat-rolled products of non-rectangular cross-section where such cross-section is achieved subsequent to the rolling process (*i.e.*, products which have been worked after rolling)—for example, products which have been beveled or rounded at the edges. Excluded is grade X–70 plate. These HTS item numbers are provided for convenience and Customs purposes. The written description remains dispositive.

The period of review (POR) is August 1, 1994, through July 31, 1995.

Verification

As provided in section 782(i) of the Act, we conducted verification of the information provided by respondent, using standard verification procedures, including on-site inspection of the manufacturer's facilities, the examination of relevant sales and financial records, and selection of original documentation containing relevant information. Our verification results are outlined in the public versions of the verification reports (Memorandum to the File from Elizabeth Patience and Lisa Raisner, September 25, 1996, the SSAB Sales Verification Report; Memorandum to the File from Elizabeth Patience and James Rice, September 25, 1996, the U.S. Sales Verification Report; Memorandum to the File from Elizabeth Patience and Alex Braier, September 25, 1996, the Downstream Sales Verification Report; Memorandum from Theresa Caherty and Elizabeth Patience, September 20, 1996, the Cost Verification Report).

Facts Available

On February 6, 1996, petitioners requested that the Department initiate a cost investigation of SSAB. The Department initiated a cost of production (COP) investigation of SSAB on March 15, 1996. In its initial Section D questionnaire, the Department specified that the COP and constructed value (CV) figures should be based on the actual costs incurred by the company during the POR and recorded in the normal accounting system. The initial questionnaire also specified that the submitted costs must *reconcile* to the actual costs reported in the cost accounting system used by the company to prepare its financial statements. Moreover, the initial questionnaire specified that if the company did not intend to use its normal accounting system and cost allocation methods to compute COP and CV, the company *must* contact the Department before preparing the response; SSAB did not contact us before it submitted the response on April 17, 1996. After reviewing SSAB's Section D response, we noted that the company did not use its normal accounting system to calculate COP and CV data. Specifically, we found that the response was based on a special system (''kalkyl'') which is not used in the respondent's normal accounting system. The kalkyl system is, in essence, a sales estimating tool. In

accordance with Section 782(d), on May 7, 1996 and June 14, 1996, the Department issued supplemental Section D questionnaires, which requested that SSAB provide a complete explanation of the kalkyl system. The supplemental questionnaires also requested worksheets that reconciled the submitted cost information to the financial accounting records. The supplemental Section D questionnaires further instructed the company to contact the Department if there was any uncertainty as to these instructions. On August 1, 1996, in advance of the scheduled COP/CV verification, the Department issued an agenda for the COP/CV verification. The agenda stated that the cost data submitted to the Department must be reconciled to the company's general ledger, cost accounting system, and financial statements. Additionally, the agenda indicated specific steps that would be followed at verification to reconcile the submitted cost data to the normal accounting books and records. The agenda also stated that if the company had any questions or if any of the verification procedures could not be performed, the officials should contact the Department. The company made minor inquiries about the supplemental questionnaire but did not discuss with the Department its use of the kalkyl system or its inability to perform the necessary reconciliation. In addition, they made no inquiries about the verification agenda.

In accordance with Section 782(i), from August 12 through August 16, 1996, the Department conducted a verification of the company's submitted cost data. SSOX was unable to reconcile its submitted cost data to its normal accounting books and records. At verification, we found that the system used to prepare the cost response was a special version of the kalkyl system. SSOX was unable to reconcile its normal kalkyl system to this ''modified'' kalkyl system. Further, SSOX was unable to reconcile its financial accounting system to its ''normal'' kalkyl system. In short, SSOX was unable to reconcile its submitted cost data to its normal accounting books and records and was thus unable to demonstrate that the submitted COP and CV data was based on the company's actual production experience. (For a more detailed explanation, see the public version of the Cost Verification Report.)

Because the company was unable to reconcile the submitted costs to its normal accounting books and records, the verification could not proceed in an orderly and timely manner. Therefore, major areas of the response and significant items identified in the agenda were not tested or were incomplete. These areas included materials, labor, variable overhead, fixed overhead, and transactions with affiliated entities.

Our verification testing and other evidence on the record regarding SSAB's use of a modified kalkyl system indicate that this system had a significant distortive impact on SSAB's reported COP and CV data. SSAB's failure to reconcile its submitted costs to its normal books and records prevents us from quantifying the magnitude of the distortions which exist in its submitted data. (For a more detailed explanation, see the public version of the Cost Verification Report.)

Section 776(a)(2) of the Act provides that if an interested party or any other person—(A) withholds information that has been requested by the administering authority, (B) fails to provide such information by the deadlines for the submission of the information or in the form and manner requested, subject to subsections (c)(1) and (e) of section 782, (C) significantly impedes a proceeding under this title, or (D) provides such information but the information cannot be verified as provided in section 782(i), the administering authority * * * shall, subject to section 782(d), use the facts otherwise available in reaching the applicable determination under this title.

Subsection (e) provides that the Department shall not decline to consider information that is submitted by an interested party and is necessary to the determination but does not meet all the applicable requirements established by the Department if—

(1) the information is submitted by the deadline established for its submission,

(2) the information can be verified,

(3) the information is not so incomplete that it cannot serve as a reliable basis for reaching the applicable determination,

(4) the interested party has demonstrated that it acted to the best of its ability in providing the information and meeting the requirements established by the Department with respect to the information, and

(5) the information can be used without undue difficulties.

SSAB's failure to reconcile its submitted costs to its financial accounting system constitutes a verification failure under Section 776(a)(2)(D) of the Act. We must therefore consider whether the submitted cost data is useable under Section 782(e) of the Act.

When examined in light of the requirements of section 782(e), the facts in this case indicate that SSAB's reported cost data is so thoroughly and systematically flawed as to render it unusable. First, for the reasons detailed above, the accuracy of SSAB's submitted cost data could not be verified, as required by section (e)(2). Second, because of the flaws in its cost data, (which are detailed in the Cost Verification Report) SSAB's submitted cost data ''cannot serve as a reliable basis for reaching the applicable determination'' under section (e)(3), nor can it ''be used without undue difficulties'' under section (e)(5). Third, in its failure to provide cost information that could be reconciled to its financial statements, and its failure to give the Department fair notice of this defect, SSAB has not acted to the ''best of its ability'' in meeting the Department's requirements, pursuant to section 782(e)(4) of the Act.

The use of facts available is also subject to section 782(d) of the Act. Subsection 782(d) provides that if the Department ''determines that a response to a request for information * * * does not comply with the request, {the Department} shall promptly inform the person submitting the response of the nature of the deficiency and shall, to the extent practicable, provide that person with an opportunity to remedy or explain the deficiency in light of the time limits established for completion of investigations or reviews under this title.'' SSAB had ample opportunity to correct the defects in its submitted cost data. As indicated above, the deficiency in SSAB's submissions in reconciling its submitted costs to its accounting records was brought to its attention in a supplemental questionnaire and again during verification. SSAB, however, failed to modify its methodology to comply with the Department's instructions.

For the foregoing reasons, the Department has determined that, insofar as SSAB's cost data could not be verified, section 776(a) of the Act requires the Department to use the facts available with respect to this data. However, the Department must also determine whether (1) the use of facts available for SSAB's cost data renders the rest of SSAB's submitted information (*i.e.*, the sales data) unusable, and (2) whether the use of adverse information as facts available is warranted.

First, we have determined that the required use of facts available for SSAB's cost data renders its sales data unusable. Because of the flawed nature of the cost data, home market sales

cannot be tested to determine whether they were made at prices above production cost. Insofar as the Department can only make price-to-price comparisons (normal value to export price) on those home market sales that are made above cost, the systematically flawed nature of the cost data makes these comparisons impossible. A second problem with using the home market sales data is the absence of reliable difference in merchandise figures (DIFMERs). Under section 773(a)(6)(C), when comparing normal value to export price or constructed export price, the Department is required to account for the effect of physical differences between the merchandise sold in each market. In this case, DIFMERs were required for substantially all United States and home market matches. Because DIFMER data is based on cost information from the section D response (which as discussed above could not be verified), the effect of physical differences could not be determined by the Department.

In the absence of home market sales data (*i.e.*, when the home market is viable but there are insufficient sales above COP to compare with U.S. sales), the Department would normally resort to the use of constructed value as normal value. However, the constructed value information reported by SSAB includes the discredited cost data. Therefore, the use of facts available for cost of production data precludes the use of the submitted constructed value information.

Ranged public data submitted by other respondents was not an available alternative basis of normal value, nor was the petitioners' own cost data. The petitioners' cost data is not on the record in this review because their allegation of sales below cost of production was based on SSAB's data. Moreover, because SSAB is the only participant in this proceeding, we do not have ranged public data submitted by other respondents to use as facts available.

The Department's prior practice has been to reject a respondent's submitted information *in toto* when flawed and unreliable cost data renders any price-to-price comparison impossible. The rationale for this policy is contained in *Notice of Final Determination of Sales at Less than Fair Value: Grain-Oriented Electrical Steel From Italy,* 59 FR 33952, 33953–54 (July 1, 1994), (*Electrical Steel From Italy*), where the respondent failed the cost verification. The Department explained that the rejection of a respondent's questionnaire response *in toto* is appropriate and consistent with past practice in instances where a respondent failed to provide verifiable COP information:

If the Department were to accept verified sales information when a respondent's cost information (a substantial part of the response) does not verify, respondents would be in a position to manipulate margin calculations by permitting the Department to verify only that information which the respondent wishes the Department to use in its margin calculation.

That is the situation with SSAB, which has provided, in proper form, sales information which could be verified, but has not provided cost data which could be verified (see detailed discussion of verification testing in the Cost Verification Report). Although *Electrical Steel from Italy* was a case involving the Best Information Available (BIA) under the ''old'' statute, it is evidence of the Department's practice of regarding verified sales information as unusable when the corresponding cost data is so flawed that price-to-price comparisons are rendered impossible. Cf. *Certain Corrosion-Resistant Carbon Steel Flat Products from Korea: Final Results of Antidumping Duty Administrative Review,* 61 FR 18547, 18559 (April 26, 1996) (the use of total BIA warranted where reliable price-to-price comparisons are not possible).

Accordingly, we find that there is no reasonable basis for determining normal value for SSAB in this review. As a result, we could not use SSAB's U.S. sales data in determining an antidumping margin. The Department, therefore, had no choice but to resort to a total facts available methodology.

With regard to which total facts available are appropriate, section 776(b) provides that adverse inferences may be used against a party that has failed to cooperate by not acting to the best of its ability to comply with requests for information. See also SAA at 870. Specifically, section 776(b) of the Act provides that, where the Department ''finds that an interested party has failed to cooperate by not acting to the best of its ability to comply with a request for information from [the Department] * * * [the Department] may use an inference that is adverse to the interests of that party in selecting from among the facts otherwise available.''

As discussed above, SSAB failed to reconcile the reported costs to its financial accounting records. Moreover, SSAB made no effort to provide the Department with notice of this defect. We have thus determined that SSAB has not acted to the best of its ability to comply with our requests for information. Accordingly, consistent with section 776(b) of the Act, we have applied total adverse facts available.

Section 776(b) authorizes the Department to use as adverse facts available information derived from the petition, the final determination, a previous administrative review, or other information placed on the record. Section 776(c) provides that the Department shall, to the extent practicable, corroborate ''secondary information'' by reviewing independent sources reasonably at its disposal. The SAA, at 870, makes it clear that ''secondary information'' includes information from the petition in the less-than-fair-value (LTFV) investigation and information from a previous Section 751 review of the subject merchandise. The SAA also provides that ''corroborate''' means simply that the Department will satisfy itself that the secondary information to be used has probative value. *Id.*

For our total adverse FA margin, we considered both the highest transaction margin from the first administrative review, a review which included only SSAB, and the BIA rate from the LTFV investigation, which was based on an average of petition rates. We chose the latter because, while SSAB did not act to the best of its ability in responding to our cost information requests, it did cooperate with respect to certain aspects of this review.

To corroborate the LTFV BIA rate of 24.23 percent, we examined the basis of the rates contained in the petition. The US price in the petition was based on actual prices from invoices, quotes to U.S. customers, and IM–145 import statistics. Additionally, the foreign market value was based on actual price quotations to home market customers, home market price lists and published reports of domestic prices. Home market price quotations were obtained through a market research report. See, *Initiation of Antidumping Duty Investigations and Postponement of Preliminary Determinations: Certain Hot-Rolled Carbon Steel Flat Products, Certain Cold-Rolled Carbon Steel Flat Products, Certain Corrosion-Resistant Carbon Steel Flat Products, and Certain Cut-to-Length Carbon Steel Plate From Various Countries,* 57 FR 33488 (July 29, 1992). As we stated in the *Final Determination of Sales at LTFV: Certain Pasta From Turkey,* 61 FR 30309 (June 14, 1996), export prices which are based on U.S. import statistics are considered corroborated. In addition, price lists and published reports of domestic prices which support the petition margin are independent sources. With regard to

market research reports, we have accepted these as corroborative in light of the Department's practice of confirming the accuracy of such reports prior to initiation. *See Pasta From Turkey* at 30312. Thus, the LTFV BIA rate is corroborated.

Preliminary Results of Review

As a result of our review, we preliminarily determine the dumping margin (in percent) for the period August 1, 1994, through July 31, 1995 to be as follows:

Manufacturer/exporter	Margin (percent)
SSAB	24.23

Parties to this proceeding may request disclosure within 5 days of the date of publication of this notice. Any interested party may request a hearing within 10 days of the date of publication of this notice. Any hearing, if requested, will be held 44 days after the date of publication or the first business day thereafter. Case briefs and/or other written comments from interested parties may be submitted not later than 30 days after the date of publication. Rebuttal briefs and rebuttals to written comments, limited to issues raised in those comments, may be filed not later than 37 days after the date of publication of this notice. The Department will publish the final results of this administrative review, including its analysis of issues raised in any written comments or at a hearing, not later than 180 days after the date of publication of this notice.

Upon issuance of the final results of review, the Department shall determine, and the U.S. Customs Service shall assess, antidumping duties on all appropriate entries.

Furthermore, the following deposit requirements will be effective for all shipments of the subject merchandise entered, or withdrawn from warehouse, for consumption on or after the publication date of the final results of these administrative review, as provided by section 751(a)(1) of the Act: (1) the cash deposit rates for the reviewed company will be the rate established in the final results of this review; (2) if the exporter is not a firm covered in this review, a prior review, or the original less-than-fair-value (LTFV) investigation, but the manufacturer is, the cash deposit rate will be the rate established for the most recent period for the manufacturer of the merchandise; and (3) the cash deposit rate for all other manufacturers or exporters will continue to be the ''all others'' rate made effective by the final results of the 1993–1994 administrative review of this order. (See, *Certain Cut-to-Length Carbon Steel Plate From Sweden; Final Results of Antidumping Duty Administrative Review,* 61 FR 15772 (April 9, 1996).) As noted in these final results, this rate is the ''all others'' rate from the relevant LTFV investigation. (See, *Final Determination,* 58 FR 37213 (July 9, 1993).) These deposit requirements, when imposed, shall remain in effect until publication of the final results of the next administrative review.

This notice also serves as a preliminary reminder to importers of their responsibility under 19 CFR 353.26 to file a certificate regarding the reimbursement of antidumping duties prior to liquidation of the relevant entries during this review period. Failure to comply with this requirement could result in the Secretary's presumption that reimbursement of antidumping duties occurred and the subsequent assessment of double antidumping duties.

This administrative review and notice are in accordance with section 751(a)(1) of the Act (19 U.S.C. 1675(a)(1)) and 19 CFR 353.22(c)(5).

Dated: September 25, 1996.

Robert S. LaRussa,

Acting Assistant Secretary for Import Administration.

[FR Doc. 96–25534 Filed 10–3–96; 8:45 am]

BILLING CODE 3510–DS–P

[A–405–802]

Certain Cut-to-Length Carbon Steel Plate From Finland: Preliminary Results of Antidumping Duty Administrative Review

AGENCY: Import Administration, International Trade Administration, Department of Commerce.

ACTION: Notice of preliminary results of antidumping duty administrative review

SUMMARY: In response to requests from the respondent, Rautaruukki Oy (Rautaruukki), and from petitioners (Bethlehem Steel Corporation, U.S. Steel Company a Unit of USX Corporation, Inland Steel Industries, Inc., Geneva Steel, Gulf States Steel Inc. of Alabama, Sharon Steel Corporation, and Lukens Steel Company), the Department of Commerce (the Department) is conducting an administrative review of the antidumping duty order on certain cut-to-length carbon steel plate from Finland. This review covers the above manufacturer/exporter of the subject merchandise to the United States. The period of review (POR) is August 1, 1994, through July 31, 1995.

We preliminarily determine the dumping margin for Rautaruukki to be 16.6 percent during the POR. Interested parties are invited to comment on these preliminary results. Parties who submit argument in this proceeding should also submit with the argument (1) a statement of the issue, and 2) a brief summary of the argument.

EFFECTIVE DATE: October 4, 1996.

FOR FURTHER INFORMATION CONTACT: Robin Gray or Jacqueline Wimbush, Enforcement Group III, Import Administration, International Trade Administration, U.S. Department of Commerce, 14th Street and Constitution Avenue, NW., Washington, DC 20230; telephone: (202) 482–0159 or (202) 482–1394, respectively.

SUPPLEMENTARY INFORMATION:

The Applicable Statute

Unless otherwise indicated, all citations to the statute are references to the provisions effective January 1, 1995, the effective date of the amendments made to the Tariff Act of 1930 (the Act), by the Uruguay Rounds Agreements Act (URAA). In addition, unless otherwise indicated, all citations to the Department's regulations are to the current regulations, as amended by the interim regulations published in the Federal Register on May 11, 1995 (60 Fed. Reg. 25130).

Background

On July 9, 1993, the Department published in the Federal Register (58 Fed. Reg. 37136) the final affirmative antidumping duty determination on certain cut-to-length carbon steel plate from Finland. We published an antidumping duty order on August 19, 1993 (58 Fed. Reg. 44165). On August 1, 1995, the Department published the Opportunity to Request an Administrative Review of this order for the period August 1, 1994–July 31, 1995 (60 Fed. Reg. 39150). The Department received requests for an administrative review of Rautaruukki's exports from Rautaruukki itself, a producer/exporter of the subject merchandise, and from the petitioners. We initiated the review on September 8, 1995 (60 Fed. Reg. 46817).

Under section 751(a)(3)(A) of the Act, the Department may extend the deadline for completion of an administrative review if it determines that it is not practicable to complete the review within the statutory time limit of 365 days. On April 1, 1996, the Department extended the time limits for the preliminary and final results in this

case. *See Extension of Time Limit for Antidumping Duty Administrative Reviews,* 61 Fed.Reg. 14291 (April 1, 1996).

The Department is conducting this review in accordance with section 751(a) of the Act.

Scope of the Review

The products covered by this administrative review constitute one ''class or kind'' of merchandise: certain cut-to-length carbon steel plate. These products include hot-rolled carbon steel universal mill plates (*i.e.,* flat-rolled products rolled on four faces or in a closed box pass, of a width exceeding 150 millimeters but not exceeding 1,250 millimeters and of a thickness of not less than 4 millimeters, not in coils and without patterns in relief), of rectangular shape, neither clad, plated nor coated with metal, whether or not painted, varnished, or coated with plastics or other nonmetallic substances; and certain hot-rolled carbon steel flat-rolled products in straight lengths, of rectangular shape, hot rolled, neither clad, plated, nor coated with metal, whether or not painted, varnished, or coated with plastics or other nonmetallic substances, 4.75 millimeters or more in thickness and of a width which exceeds 150 millimeters and measures at least twice the thickness, as currently classifiable in the Harmonized Tariff Schedule (HTS) under item numbers 7208.31.0000, 7208.32.0000, 7208.33.1000, 7208.33.5000, 7208.41.0000, 7208.42.0000, 7208.43.0000, 7208.90.0000, 7210.70.3000, 7210.90.9000, 7211.11.0000, 7211.12.0000, 7211.21.0000, 7211.22.0045, 7211.90.0000, 7212.40.1000, 7212.40.5000, and 7212.50.0000. Included are flat-rolled products of nonrectangular cross-section where such cross-section is achieved subsequent to the rolling process (*i.e.,* products which have been ''worked after rolling'')—for example, products which have been bevelled or rounded at the edges. Excluded is grade X–70 plate. These HTS item numbers are provided for convenience and Customs purposes. The written description remains dispositive.

Verification

As provided in section 782(i) of the Act, we verified information provided by the respondent by using standard verification procedures, including on-site inspection of the manufacturer's facilities, the examination of relevant sales and financial records, and selection of original documentation containing relevant information. Our verification results are outlined in the verification reports, the public versions of which are available at the Department of Commerce, in Central Records Unit (CRU), Room B099.

Transactions Reviewed

In accordance with section 751(a)(2) of the Act, the Department is required to determine the normal value and export price (EP) of each entry of subject merchandise during the relevant review period.

In determining normal value, based on a review of Rautaruukki's submissions and verification findings, the Department determined that Rautaruukki need not report its home market downstream sales because they would most likely not be used in the calculation of normal value. See *Decision Memorandum on Reporting Downstream Sales,* July 26, 1996.

Product Comparisons

In accordance with section 771(16) of the Act, we considered all products produced by the respondent, covered by the description in the *Scope of the Review* section, above, and sold in the home market during the POR, to be foreign like products for purposes of determining appropriate product comparisons to U.S. sales. Where there were no sales of identical merchandise in the home market to compare to U.S. sales, we compared U.S. sales to the next most similar foreign like product on the basis of the characteristics listed in Appendix III of the Department's September 14, 1995 antidumping questionnaire.

Rautaruukki's reported control numbers were not prepared in accordance with the characteristics listed in Appendix III of the Department's September 14, 1995 antidumping questionnaire. Specifically, Rautaruukki has reported multiple plate specification codes under a single control number, rather than limiting a single control number to a unique plate specification code. Rautaruukki has also created multiple control numbers for products with the same identical physical characteristics, effectively adding new physical characteristics for beveling and plate manufactured by different processes or having different end uses. As we stated in the *Final Results of Antidumping Duty Administrative Review: Certain Cut-To-Length Carbon Steel Plate From Finland,* 61 Fed. Reg. 2792, 2795 (January 29, 1996), the Department has no basis upon which to differentiate beveled plate from non-beveled plate for matching and price comparison purposes. Similarly, the Department does not have a basis to differentiate plate manufactured by different processes or having different end uses. Consequently, for these preliminary results, the Department has modified Rautaruukki's submitted control numbers so that they more closely conform to the Department's model match hierarchy. In making the product comparisons, we matched foreign like products based on the physical characteristics reported by the respondent and verified by the Department, modified as described above. We note that for future reviews, Rautaruukki must properly report its control numbers.

Fair Value Comparisons

To determine whether sales of certain cut-to-length carbon steel plate by Rautaruukki to the United States were made at less than fair value, we compared the export price (EP) to the normal value (NV), as described in the ''Export Price'' and ''Normal Value'' sections of this notice. In accordance with section 777A(d)(2), we calculated monthly weighted-average prices for NV and compared these to individual U.S. transactions.

Export Price

We used EP as defined in section 772(a) of the Act. We calculated EP based on packed prices to unaffiliated customers in the United States. Where appropriate, we made deductions from the starting price for brokerage and handling, international freight, marine insurance, other transportation expenses, certification charges and credit.

Normal Value

Based on a comparison of the aggregate quantity of home market and U.S. sales, we determined that the quantity of the foreign like product sold in the exporting country was sufficient to permit a proper comparison with the sales of the subject merchandise to the United States, pursuant to section 773(a) of the Act. Therefore, in accordance with section 773(a)(1)(B)(i) of the Act, we based NV on the price at which the foreign like product was first sold for consumption in the home market, in the usual commercial quantities and in the ordinary course of trade, at the same level of trade as the export price (see level of trade analysis below).

Where appropriate, we deducted rebates, discounts, credit expenses, inland freight, certification charges, warranty and packing.

In comparisons to EP sales, we also increased NV by U.S. packing costs in accordance with section 773(a)(6)(A) of

the Act. We made adjustments to NV for differences in cost attributable to differences in physical characteristics of the merchandise, pursuant to section 773(a)(6)(C)(ii) of the Act. In accordance with the Department's practice, where for the most similar product match the difference in merchandise adjustment for any product comparison exceeded 20 percent, we based NV on constructed value (CV).

As set forth in section 773(a)(1)(B)(i) of the Act and in the Statement of Administrative Action (SAA) at pages 829–831, to the extent practicable, the Department will calculate normal values based on sales at the same level of trade as the U.S. sales. When the Department is unable to find sales in the comparison market at the same level of trade as the U.S. sale(s), the Department may compare sales in the U.S. and foreign markets at different levels of trade. *See, Final Determination of Sales at Less Than Fair Value: Certain Pasta from Italy,* 61 Fed. Reg. 30326, 30330 (June 14, 1996) (''Pasta from Italy'').

In accordance with section 773(a)(7)(A), if sales at different levels of trade are compared, the Department will adjust the normal value to account for the difference in level of trade if two conditions are met. The differences between the level of trade must affect price comparability as evidenced by a pattern of consistent price differences between sales at the different levels of trade in the market in which normal value is determined.

In its questionnaire responses, Rautaruukki stated that there were no differences in its selling activities by customer categories within each market. In order to independently confirm the absence of separate levels of trade within or between the U.S. and home markets, we examined Rautaruukki's questionnaire responses for indications that Rautaruukki's function as a seller differed among customer categories. Pursuant to section 773(a)(1)(B)(i) of the Act, and the SAA at 827, in identifying levels of trade for directly observed (*i.e.*, not constructed) export price and normal values sales, we considered the selling functions reflected in the starting price, before any adjustments. Where possible, we further examined whether each selling function was performed on a substantial portion of sales. (*See Notice of Proposed Rulemaking,* 61 Fed. Reg. 7308, 7348 (February 27, 1996).

Rautaruukki sold to a single customer in the U.S. market. In the home market, Rautaruukki sold to three categories of customers and performed the same selling functions between sales to all its home market customers. Thus, our analysis of the questionnaire response leads us to conclude that sales within each market and between markets are not made at different levels of trade. Accordingly, we preliminarily find that all sales in the home market and the U.S. market are made at the same level of trade. Therefore, all price comparisons are at the same level of trade and an adjustment pursuant to section 773(a)(7)(A) is unwarranted.

Cost of Production Analysis

Based on the fact that the Department had disregarded sales in the LTFV investigation (the most recently completed investigation/review of Rautaruukki at the time of initiation in this review) pursuant to a cost investigation on Rautaruukki's home market sales, the Department found reasonable grounds in this review, in accordance with section 773(b)(2)(A)(ii) of the Act, to believe or suspect that respondent made sales in the home market at prices below the cost of producing the merchandise. As a result, the Department initiated an investigation to determine whether the respondent made home market sales during the POR at prices below their COP within the meaning of section 773(b) of the Act. Before making any fair value comparisons, we conducted the COP analysis described below.

A. Calculation of COP

We calculated the COP based on the sum of respondent's cost of materials and fabrication for the foreign like product, plus amounts for home market selling, general, and administrative expenses (SG&A), and packing costs in accordance with section 773(b)(3) of the Act. Based on our verification of Rautaruukki's cost response, we adjusted Rautaruukki's reported COP and CV to reflect certain adjustments to the cost of manufacturing and the general and administrative expenses.

B. Test of Home Market Prices

We used the respondent's weighted-average COP, as adjusted (see above), for the period July 1994 to June 1995. We compared the weighted-average COP figures to home market sales of the foreign like product as required under section 773(b) of the Act. In determining whether to disregard home-market sales made at prices below the COP, we examined whether (1) within an extended period of time, such sales were made in substantial quantities, and (2) such sales were made at prices which permitted the recovery of all costs within a reasonable period of time. On a product-specific basis, we compared the COP to the home market prices, less any applicable movement charges, rebates, discounts, and direct and indirect selling expenses.

C. Results of COP Test

Pursuant to section 773(b)(2)(C), where less than 20 percent of respondent's sales of a given product were at prices less than the COP, we did not disregard any below-cost sales of that product because we determined that the below-cost sales were not made in ''substantial quantities.'' Where 20 percent or more of a respondent's sales of a given product during the POR were at prices less than the COP, we found that sales of that model were made in ''substantial quantities,'' in accordance with section 773(b)(2)(B) of the Act, and were not at prices which would permit recovery of all costs within a reasonable period of time, in accordance with section 773(b)(2)(D) of the Act. When we found that below-cost sales had been made in ''substantial quantities'' and were not at prices which would permit recovery of all costs within a reasonable period of time, we disregarded the below-cost sales in accordance with section 773(b)(1) of the Act. Where all sales of a specific product were at prices below the COP, we disregarded all sales of that product, and calculated NV based on CV.

D. Calculation of CV

In accordance with section 773(e) of the Act, we calculated CV based on the sum of respondent's cost of materials, fabrication, SG&A, U.S. packing costs, interest expenses and profit as reported in the U.S. sales database. In accordance with section 773(e)(2)(A) of the Act, we based SG&A and profit on the amounts incurred and realized by the respondent in connection with the production and sale of the foreign like product in the ordinary course of trade, for consumption in the foreign country. For selling expenses, we used the weighted-average home market selling expenses. Where we compared CV to EP, we deducted from CV the weighted-average home market direct selling expenses and added the weighted-average U.S. product-specific direct selling expenses, in accordance with Section 353.56(a)(2) of the Department's regulations.

Facts Available

We preliminarily determine that, in accordance with section 776(a) of the Act, the use of facts available is appropriate because the Department was unable to verify Rautaruukki's COP and CV data for certain home market plate products. (See the Department's cost verification report.) As a result of the failure on the part of Rautaruukki to provide verifiable COP and CV data for

certain home market products, the Department was unable to perform a cost test for home market sales of these products or to calculate a difference in merchandise adjustment. Accordingly, we must make our preliminary determination based on facts otherwise available, pursuant to section 776(a) of the Act. For those U.S. sales for which the best match is a home market sale for which we were unable to perform the cost test or to calculate a difference in merchandise adjustment, we have used the highest rate from any prior segment of the proceeding, 32.80 percent, as NV for comparison to these U.S. sales. This is the rate for Rautaruukki that was calculated in the LTFV investigation for the period January 1, 1992, through June 30, 1992. For those U.S. sales for which the best match included both sales for which we were unable to perform the cost test or to calculate a difference in merchandise adjustment and sales for which we were able to calculate the cost test or a difference in merchandise, we calculated a weighted-average margin. The weighted-average margin was calculated using a facts available component and a calculated component. *See* the Department's analysis memorandum (for Rautaruukki) dated September 24, 1996.

Currency Conversion

For purposes of the preliminary results, we made currency conversions based on the official exchange rates in effect on the dates of the U.S. sales as certified by the Federal Reserve Bank of New York. Section 773A(a) of the Act directs the Department to use a daily exchange rate in order to convert foreign currencies into U.S. dollars, unless the daily rate involves a ''fluctuation.'' In accordance with the Department's practice, we have determined as a general matter that a fluctuation exists when the daily exchange rate differs from a benchmark by 2.25 percent. The benchmark is defined as the rolling average of rates for the past 40 business days. When we determine a fluctuation existed, we substitute the benchmark for the daily rate. However, for the preliminary results in this review we have not determined that a fluctuation exists, and we have not substituted the benchmark for the daily rate, in accordance with Policy Bulletin 96–1 (Import Administration Exchange Rate Methodology).

Preliminary Results of the Review

As a result of this review, we preliminarily determine that the following weighted-average dumping margin exists:

Manufacturer/exporter	Period	Margin
Rautaruukki Oy	8/1/94–7/31/95	16.60

Parties to the proceeding may request disclosure within five days of the date of publication of this notice. Any interested party may request a hearing within 10 days of publication. Any hearing, if requested, will be held 44 days after the date of publication or the first business day thereafter. Case briefs from interested parties may be submitted not later than 30 days after the date of publication. Rebuttal briefs, limited to issues raised in those briefs, may be filed not later than 37 days after the date of publication of this notice. The Department will publish the final results of this administrative review, including its analysis of issues raised in the case and rebuttal briefs, not later than 180 days after the date of publication of this notice.

The following deposit requirements will be effective upon publication of the final results of this antidumping duty review for all shipments of certain cut-to-length carbon steel plate from Finland, entered, or withdrawn from warehouse, for consumption on or after the publication date, as provided by section 751(a) of the Tariff Act: (1) the cash deposit rate for the reviewed company will be that established in the final results of review; (2) for exporters not covered in this review, but covered in the LTFV investigation or previous review, the cash deposit rate will continue to be the company-specific rate from the LTFV investigation; (3) if the exporter is not a firm covered in this review, a previous review, or the original LTFV investigation, but the manufacturer is, the cash deposit rate will be the rate established for the most recent period for the manufacturer of the merchandise; (4) the cash deposit rate for all other manufacturers or exporters will continue to be 36.00 percent, the ''All Others'' rate made effective by the LTFV investigation. These requirements, when imposed, shall remain in effect until publication of the final results of the next administrative review.

This notice serves as a preliminary reminder to importers of their responsibility under 19 CFR 353.26 to file a certificate regarding the reimbursement of antidumping duties prior to liquidation of the relevant entries during this review period. Failure to comply with this requirement could result in the Secretary's presumption that reimbursement of antidumping duties occurred and the subsequent assessment of double antidumping duties.

This administrative review and notice are published in accordance with section 751(a)(1) of the Act and 19 CFR 353.22.

Dated: September 25, 1996.

Robert S. LaRussa,

Acting Assistant Secretary for Import Administration.

[FR Doc. 96–25536 Filed 10–3–96; 8:45 am]

BILLING CODE 3510–DS-P

[A–351–817]

Certain Cut-to-Length Carbon Steel Plate From Brazil: Preliminary Results of Antidumping Duty Administrative Review

AGENCY: Import Administration, International Trade Administration, Department of Commerce.

ACTION: Notice of Preliminary Results of Antidumping Duty Administrative Review.

SUMMARY: In response to a request from the respondent, Companhia Siderúrgica de Tubarão (CST), the Department of Commerce (the Department) is conducting an administrative review of the antidumping duty order on certain cut-to-length carbon steel plate from Brazil. This review covers the above manufacturer/exporter of the subject merchandise to the United States. The period of review (POR) is August 1, 1994, through July 31, 1995.

We preliminarily determine the dumping margin for CST to be 2.58 percent during the POR. Interested parties are invited to comment on these preliminary results. Parties who submit argument in this proceeding should also submit with the argument (1) a statement of the issue, and (2) a brief summary of the argument.

EFFECTIVE DATE: October 4, 1996.

FOR FURTHER INFORMATION CONTACT: Helen Kramer or Linda Ludwig, Enforcement Group III, Import Administration, International Trade

Administration, U.S. Department of Commerce, 14th Street and Constitution Avenue NW., Washington, DC 20230; telephone: (202) 482–0405 or (202) 482–3833, respectively.

SUPPLEMENTARY INFORMATION:

The Applicable Statute

Unless otherwise indicated, all citations to the statute are references to the provisions effective January 1, 1995, the effective date of the amendments made to the Tariff Act of 1930 (the Act), by the Uruguay Round Agreements Act (URAA). In addition, unless otherwise indicated, all citations to the Department's regulations are to the current regulations, as amended by the interim regulations published in the Federal Register on May 11, 1995 (60 Fed. Reg. 25130).

Background

On July 9, 1993, the Department published in the Federal Register (58 Fed. Reg. 37136) the final affirmative antidumping duty determination on certain cut-to-length carbon steel plate from Brazil. We published an antidumping duty order on August 19, 1993 (58 Fed. Reg. 44164). On August 1, 1995, the Department published the Opportunity to Request an Administrative Review of this order for the period August 1, 1994–July 31, 1995 (60 Fed. Reg. 39150). The Department received a request for an administrative review of CST's exports from CST, a producer/exporter of the subject merchandise. We initiated the review on September 8, 1995 (60 Fed. Reg. 46817). In a separate proceeding, the product produced by the respondent is the subject of an ongoing scope inquiry.

Under the Act, the Department may extend the deadline for completion of administrative reviews if it determines that it is not practicable to complete the review within the statutory time limit of 365 days. On April 1, 1996, the Department extended the time limits for the preliminary and final results in this case. *See Extension of Time Limit for Antidumping Duty Administrative Reviews*, 61 Fed. Reg. 14291 (1996).

The Department is conducting this review in accordance with section 751 of the Act.

Scope of the Review

The products covered by this administrative review constitute one ''class or kind'' of merchandise: certain cut-to-length carbon steel plate. These products include hot-rolled carbon steel universal mill plates (*i.e.*, flat-rolled products rolled on four faces or in a closed box pass, of a width exceeding 150 millimeters but not exceeding 1,250 millimeters and of a thickness of not less than 4 millimeters, not in coils and without patterns in relief), of rectangular shape, neither clad, plated nor coated with metal, whether or not painted, varnished, or coated with plastics or other nonmetallic substances; and certain hot-rolled carbon steel flat-rolled products in straight lengths, of rectangular shape, hot rolled, neither clad, plated, nor coated with metal, whether or not painted, varnished, or coated with plastics or other nonmetallic substances, 4.75 millimeters or more in thickness and of a width which exceeds 150 millimeters and measures at least twice the thickness, as currently classifiable in the Harmonized Tariff Schedule (HTS) under item numbers 7208.31.0000, 7208.32.0000, 7208.33.1000, 7208.33.5000, 7208.41.0000, 7208.42.0000, 7208.43.0000, 7208.90.0000, 7210.70.3000, 7210.90.9000, 7211.11.0000, 7211.12.0000, 7211.21.0000, 7211.22.0045, 7211.90.0000, 7212.40.1000, 7212.40.5000, and 7212.50.0000. Included are flat-rolled products of nonrectangular cross-section where such cross-section is achieved subsequent to the rolling process (*i.e.*, products which have been ''worked after rolling'')—for example, products which have been beveled or rounded at the edges. Excluded is grade X–70 plate. These HTS item numbers are provided for convenience and Customs purposes. The written description remains dispositive.

Verification

As provided in section 782(i) of the Tariff Act, we verified information provided by the respondent by using standard verification procedures, including on-site inspection of the manufacturer's facilities, the examination of relevant sales and financial records, and selection of original documentation containing relevant information. Our verification results are outlined in the verification report, the public version of which is available in Import Administration's Central Records Unit.

Transactions Reviewed

In accordance with Section 751 of the Act, the Department is required to determine the normal value and export price (EP) of each entry of subject merchandise during the relevant review period.

Product Comparisons

In accordance with section 771(16) of the Act, we considered profile slabs sold in the home market during the POR and produced by the respondent to be covered by the description in the *Scope of the Review* section above, and to be foreign like products for purposes of determining appropriate product comparisons to U.S. sales. We matched sales of foreign like products to U.S. sales based on the physical characteristics reported by the respondent and verified by the Department. To take into account the high rate of inflation in Brazil during the POR, we compared foreign like products and products exported to the United States which were sold in the same month. Where there were no sales of identical merchandise in the home market to compare to U.S. sales within the same month, we compared U.S. sales to the next most similar foreign like product (on the basis of the characteristics listed in Appendix III of the Department's September 14, 1995, antidumping questionnaire) which was sold in the same month.

Fair Value Comparisons

To determine whether sales of certain cut-to-length carbon steel plate by CST to the United States were made at less than fair value, we compared the export price (EP) to the normal value (NV), as described in the ''Export Price'' and ''Normal Value'' sections of this notice. In accordance with section 777A(d)(2), we calculated monthly weighted-average prices for NV and compared these to individual U.S. transactions.

Export Price (EP)

We used EP as defined in section 772(a) of the Act. We calculated EP based on FOB prices to unaffiliated customers in the United States. We made deductions from the starting price for foreign inland freight and foreign brokerage and handling. Based on our verification of CST's U.S. sales response, we made minor adjustments to CST's reported foreign brokerage and handling. The material costs of stowing and lashing the merchandise on vessels are the only packing costs on U.S. sales, and are included in foreign brokerage and handling.

Normal Value

Based on a comparison of the aggregate quantity of home market and U.S. sales, we determined that the quantity of the foreign like product sold in the exporting country was sufficient to permit a proper comparison with the sales of the subject merchandise to the United States, pursuant to section 773(a) of the Act.

On January 17, 1996, petitioners alleged that CST made home market sales of the subject merchandise at

prices below the cost of production (COP) during the POR. The Department has determined that when appropriate adjustments to petitioners' methodology are made, there is no evidence of below cost sales. (*See* internal memorandum to Joseph A. Spetrini from Roland L. MacDonald and Christian B. Marsh, ''Petitioners' Allegation of Sales Below the Cost of Production for Companhia Sideŕurgica de Tubarão (CST).'') Therefore, in accordance with section 773(a)(1)(B)(i) of the Act, we based NV on the price at which the foreign like product was first sold for consumption in the home market, in the usual commercial quantities and in the ordinary course of trade.

During verification, we found that an order acknowledgement and production specification sheet are issued each time agreement is reached with a customer on price, quantity and product. We therefore conclude that the appropriate date of sale in the home market, when all the essential terms of sale are set, is the order acknowledgement date, the same as the reported date of sale in the U.S. market. Consequently, we have preliminarily rejected CST's reported home market date of sale, which is the invoice date.

We have preliminarily disallowed an adjustment for credit expenses, because the respondent did not provide the interest rates requested by the Department for use in calculating these expenses. CST did not report any packing expenses. To achieve tax neutrality, we deducted value-added taxes (CONFINS, PIS and IPI) included in home market prices, but not assessed on the subject merchandise, from the reported gross unit price. As 95 percent of the IPI tax paid is rebated, we deducted only five percent of the reported IPI tax paid from the home market price. To equalize the rates of ICMS tax included in home market and U.S. prices, we subtracted the amount of the ICMS tax included in the home market price and added back 2.21 percent of the reported net home market price (which is the rate of ICMS tax included in the price of subject merchandise). We made adjustments to NV for differences in cost attributable to differences in physical characteristics of the merchandise, pursuant to section 773(a)(6)(C)(ii) of the Act.

As set forth in section 773(a)(1)(B)(i) of the Act and in the Statement of Administrative Action (SAA) at pages 829–831, to the extent practicable, the Department will calculate normal values based on sales at the same level of trade as the U.S. sales. When the Department is unable to find sales in the comparison market at the same level of trade as the U.S. sale(s), the Department may compare sales in the U.S. and foreign markets at different levels of trade. *See, Final Determination of Sales at Less Than Fair Value: Certain Pasta from Italy,* 61 FR. 30326, June 14, 1996.

In accordance with section 773(a)(7)(A), if sales at different levels of trade are compared, the Department will adjust the normal value to account for the difference in level of trade if two conditions are met. First, there must be differences between the actual selling functions performed by the seller at the level of trade of the U.S. sale and the level of trade of the normal value sale. Second, the differences between the levels of trade must affect price comparability, as evidenced by a pattern of consistent price differences between sales at the different levels of trade in the market in which normal value is determined.

In its questionnaire responses, CST stated that there were no differences in its selling activities by customer categories within each market. In order independently to confirm the absence of separate levels of trade within or between the U.S. and home markets, we examined CST's questionnaire responses for indications that CST's function as a seller differed among customer categories. Pursuant to section 773(a)(1)(B)(i) of the Act, and the SAA at 827, in identifying levels of trade for directly observed (*i.e.*, not constructed) export price and normal values sales, we considered the selling functions reflected in the starting price, before any adjustments. Where possible, we further examined whether each selling function was performed on a substantial portion of sales. (*See Proposed Rulemaking,* 61 Fed. Reg. at 7348).

CST sold to trading companies in the U.S. market. In the home market, CST sold to distributors and performed the same selling functions with respect to sales to all its home market customers, as well as with respect to U.S. customers. Thus, our analysis of the questionnaire response leads us to conclude that sales within each market and between markets are not made at different levels of trade. At verification, we interviewed CST's sales manager, who confirmed our conclusion. Accordingly, we preliminarily find that all sales in the home market and the U.S. market are made at the same level of trade. Therefore, all price comparisons are at the same level of trade and an adjustment pursuant to section 773(a)(7)(A) is unwarranted.

Review Limited to CST

On April 3, 1996, petitioners alleged that CST failed to disclose significant interlocking directorships and other business relationships between CST and two other companies included in the original investigation, Companhia Siderúrgica Paulista (COSIPA) and Usinas Siderúrgica de Minas Gerais S.A. (USIMINAS). COSIPA and USIMINAS are not respondents in this proceeding. The Department has determined that although CST, COSIPA and USIMINAS are affiliated parties, as defined in section 351.102 (b) of the Proposed Regulations, they should not be treated as a single enterprise for margin calculation purposes. (*See* the Department's internal memorandum from Richard O. Weible to Joseph A. Spetrini dated September 10, 1996.) Thus, we have based EP and NV solely on CST's own sales.

Currency Conversion

For purposes of the preliminary results, we made currency conversions based on the official exchange rates in effect on the dates of the U.S. sales as certified by the Federal Reserve Bank of New York. Section 773A(a) directs the Department to use a daily exchange rate in order to convert foreign currencies into U.S. dollars, unless the daily rate involves a ''fluctuation.'' In accordance with the Department's practice, we have determined as a general matter that a fluctuation exists when the daily exchange rate differs from a benchmark by 2.25 percent. The benchmark is defined as the rolling average of rates for the past 40 business days. When we determine a fluctuation exists, we substituted the benchmark for the daily rate. However, for the preliminary results in this review we have not determined that a fluctuation exists, and we have not substituted the benchmark for the daily rate.

Preliminary Results of the Review

As a result of this review, we preliminarily determine that the following weighted-average dumping margin exists:

Manufacturer/exporter	Period	Margin (percent)
Companhia Siderúrgica de Tubarão	8/1/94–7/31/95	2.58

Parties to the proceeding may request disclosure within five days of the date of publication of this notice. Any interested party may request a hearing within 10 days of publication. Any hearing, if requested, will be held 44 days after the date of publication or the first business day thereafter. Case briefs and/or other written comments from interested parties may be submitted not later than 30 days after the date of publication. Rebuttal briefs and rebuttals to written comments, limited to issues raised in those comments, may be filed not later than 37 days after the date of publication of this notice. The Department will publish the final results of this administrative review, including its analysis of issues raised in any written comments or at a hearing, not later than 180 days after the date of publication of this notice.

The following deposit requirements will be effective upon publication of the final results of this antidumping duty review for all shipments of certain cut-to-length carbon steel plate from Brazil entered, or withdrawn from warehouse for consumption, on or after the publication date, as provided by section 751(a) of the Tariff Act: (1) The cash deposit rate for the reviewed company will be the rate established in the final results of this administrative review; (2) for exporters not covered in this review, but covered in the LTFV investigation, the cash deposit rate will continue to be the company-specific rate from the LTFV investigation; (3) if the exporter is not a firm covered in this review, or the original LTFV investigation, but the manufacturer is, the cash deposit rate will be the rate established for the most recent period for the manufacturer of the merchandise; (4) the cash deposit rate for all other manufacturers or exporters will continue to be 75.54 percent, the ''All Others'' rate made effective by the LTFV investigation. These requirements, when imposed, shall remain in effect until publication of the final results of the next administrative review.

This notice serves as a preliminary reminder to importers of their responsibility under 19 CFR 353.26 to file a certificate regarding the reimbursement of antidumping duties prior to liquidation of the relevant entries during this review period. Failure to comply with this requirement could result in the Secretary's presumption that reimbursement of antidumping duties occurred and the subsequent assessment of double antidumping duties.

This administrative review and notice are published in accordance with section 751(a)(1) of the Act and 19 CFR 353.22.

Dated: September 25, 1996.

Robert S. LaRussa,

Acting Assistant Secretary for Import Administration.

[FR Doc. 96–25537 Filed 10–3–96; 8:45 am]

BILLING CODE 3510–DS–P

[A–428–816]

Certain Cut-to-Length Carbon Steel Plate from Germany: Preliminary Results of Antidumping Duty Administrative Review

AGENCY: Import Administration, International Trade Administration, Department of Commerce.

ACTION: Notice of preliminary results of antidumping duty administrative review.

SUMMARY: In response to requests from the respondent, AG der Dillinger Hüttenwerke (Dillinger), and from petitioners (Bethlehem Steel Corporation, U.S. Steel Group a Unit of USX Corporation, Inland Steel Industries, Inc., Geneva Steel, Gulf States Steel Inc. of Alabama, Sharon Steel Corporation, and Lukens Steel Company), the Department of Commerce (the Department) is conducting an administrative review of the antidumping duty order on certain cut-to-length carbon steel plate from Germany. This review covers the above manufacturer/exporter of the subject merchandise to the United States. The period of review (POR) is August 1, 1994, through July 31, 1995.

We preliminarily determine no dumping margin exists for Dillinger during the POR. Interested parties are invited to comment on these preliminary results. Parties who submit argument in this proceeding should also submit with the argument (1) a statement of the issue, and (2) a brief summary of the argument.

EFFECTIVE DATE: October 4, 1996.

FOR FURTHER INFORMATION CONTACT: Nancy Decker or Linda Ludwig, Enforcement Group III, Import Administration, International Trade Administration, U.S. Department of Commerce, 14th Street and Constitution Avenue, NW., Washington, DC 20230; telephone: (202) 482–5811 or (202) 482–3833, respectively.

SUPPLEMENTARY INFORMATION:

The Applicable Statute

Unless otherwise indicated, all citations to the statute are references to the provisions effective January 1, 1995, the effective date of the amendments made to the Tariff Act of 1930 (the Act), by the Uruguay Rounds Agreements Act (URAA). In addition, unless otherwise indicated, all citations to the Department's regulations are to the current regulations, as amended by the interim regulations published in the Federal Register on May 11, 1995 (60 Fed. Reg. 25130).

Background

On July 9, 1993, the Department published in the Federal Register (58 Fed. Reg. 37136) the final affirmative antidumping duty determination on certain cut-to-length carbon steel plate from Germany. We published an amended final determination and an antidumping duty order on August 19, 1993 (58 Fed. Reg. 44170). On August 1, 1995, the Department published the Opportunity to Request an Administrative Review of this order for the period August 1, 1994–July 31, 1995 (60 Fed. Reg. 39150). The Department received requests for an administrative review of Dillinger's exports from Dillinger itself, a producer/exporter of the subject merchandise, and from the petitioners. We initiated the review on September 8, 1995 (60 Fed. Reg. 46817).

On November 20, 1995, the petitioners requested that the Department determine whether antidumping duties had been absorbed by Dillinger during the POR, pursuant to section 751(a)(4) of the Act. Section 751(a)(4) provides for the Department, if requested, to determine during an administrative review initiated two years or four years after publication of the order whether antidumping duties have been absorbed by a foreign producer or exporter subject to the order if the subject merchandise is sold in the United States through an importer who is affiliated with such foreign producer or exporter. Section 751(a)(4) was added to the Act by the URAA. The

Department's interim regulations do not address this provision of the Act.

For transition orders as defined in section 751(c)(6)(C) of the Act, *i.e.*, orders in effect as of January 1, 1995, section 351.213(j)(2) of the Department's proposed regulations provides that the Department will make a duty absorption determination, if requested, for any administrative review initiated in 1996 or 1998. *See Notice of Proposed Rulemaking and Request for Public Comments,* 61 Fed. Reg. 7308, 7366 (February 27, 1996) (''Proposed Regulations''). The commentary to the proposed regulations explains that reviews initiated in 1996 will be considered initiated in the second year and reviews initiated in 1998 will be considered initiated in the fourth year. *Id.* at 7317. Although these proposed regulations are not yet binding upon the Department, they do constitute a public statement of how the Department expects to proceed in construing section 751(a)(4) of the amended statute. This approach assures that interested parties will have the opportunity to request a duty absorption study on entries for which the second and fourth years following an order have already passed, prior to the time for sunset review of the order under section 751(c). Because the order on carbon steel plate from Germany has been in effect since 1993, this is a transition order. Therefore, based on the policy stated above, the Department will first consider a request for an absorption study if a review is initiated in 1996.

Under the Act, the Department may extend the deadline for completion of administrative reviews if it determines that it is not practicable to complete the review within the statutory time limit of 365 days. On April 1, 1996, the Department extended the time limits for the preliminary and final results in this case. *See Extension of Time Limit for Antidumping Duty Administrative Reviews,* (61 Fed.Reg. 14291 (1996)).

The Department is conducting this review in accordance with section 751 of the Act.

Scope of the Review

The products covered by this administrative review constitute one ''class or kind'' of merchandise: certain cut-to-length carbon steel plate. These products include hot-rolled carbon steel universal mill plates (*i.e.*, flat-rolled products rolled on four faces or in a closed box pass, of a width exceeding 150 millimeters but not exceeding 1,250 millimeters and of a thickness of not less than 4 millimeters, not in coils and without patterns in relief), of rectangular shape, neither clad, plated nor coated with metal, whether or not painted, varnished, or coated with plastics or other nonmetallic substances; and certain hot-rolled carbon steel flat-rolled products in straight lengths, of rectangular shape, hot rolled, neither clad, plated, nor coated with metal, whether or not painted, varnished, or coated with plastics or other nonmetallic substances, 4.75 millimeters or more in thickness and of a width which exceeds 150 millimeters and measures at least twice the thickness, as currently classifiable in the Harmonized Tariff Schedule (HTS) under item numbers 7208.31.0000, 7208.32.0000, 7208.33.1000, 7208.33.5000, 7208.41.0000, 7208.42.0000, 7208.43.0000, 7208.90.0000, 7210.70.3000, 7210.90.9000, 7211.11.0000, 7211.12.0000, 7211.21.0000, 7211.22.0045, 7211.90.0000, 7212.40.1000, 7212.40.5000, and 7212.50.0000. Included are flat-rolled products of nonrectangular cross-section where such cross-section is achieved subsequent to the rolling process (*i.e.*, products which have been ''worked after rolling'')—for example, products which have been beveled or rounded at the edges. Excluded is grade X–70 plate. These HTS item numbers are provided for convenience and Customs purposes. The written description remains dispositive.

Verification

As provided in section 782(i) of the Tariff Act, we verified information provided by the respondent by using standard verification procedures, including on-site inspection of the manufacturer's facilities, the examination of relevant sales and financial records, and selection of original documentation containing relevant information. Our verification results are outlined in the verification reports, the public versions of which are available.

Transactions Reviewed

In accordance with Section 751 of the Act, the Department is required to determine the normal value and export price (EP) of each entry of subject merchandise during the relevant review period.

In determining normal value, based on a review of Dillinger's submissions and verification findings, the Department determined that Dillinger need not report its home market downstream sales because that they would not be used in the calculation of normal value. *See Decision Memorandum on Reporting Downstream Sales,* April 11, 1996.

Product Comparisons

In accordance with section 771(16) of the Act, we considered all products produced by the respondent, covered by the description in the *Scope of the Review* section, above, and sold in the home market during the POR, to be foreign like products for purposes of determining appropriate product comparisons to U.S. sales. Where there were no sales of identical merchandise in the home market to compare to U.S. sales, we compared U.S. sales to the next most similar foreign like product on the basis of the characteristics listed in Appendix III of the Department's September 14, 1995 antidumping questionnaire. In making the product comparisons, we matched foreign like products based on the physical characteristics reported by the respondent and verified by the Department.

Fair Value Comparisons

To determine whether sales of certain cut-to-length carbon steel plate by Dillinger to the United States were made at less than fair value, we compared the export price (EP) to the normal value (NV), as described in the ''Export Price'' and ''Normal Value'' sections of this notice. In accordance with section 777A(d)(2), we calculated monthly weighted-average prices for NV and compared these to individual U.S. transactions.

Export Price

We used EP as defined in sections 772(a) of the Act.

We calculated EP based on packed prices to unaffiliated customers in the United States. Where appropriate, we made deductions from the starting price for foreign inland freight, foreign brokerage and handling, international freight, marine insurance, U.S. brokerage and handling, and U.S. Customs duties. Based on our verification of Dillinger's U.S. sales response, we made adjustments to Dillinger's reported foreign inland freight.

Normal Value

Based on a comparison of the aggregate quantity of home market and U.S. sales, we determined that the quantity of the foreign like product sold in the exporting country was sufficient to permit a proper comparison with the sales of the subject merchandise to the United States, pursuant to section 773(a) of the Act. Therefore, in accordance with section 773(a)(1)(B)(i) of the Act, we based NV on the price at which the foreign like product was first sold for consumption in the home market, in the

usual commercial quantities and in the ordinary course of trade.

Where appropriate, we deducted rebates, credit expenses, global credits and debits, inland freight, inland insurance, and packing. We also deducted value-added tax (VAT) from the reported gross unit price, since the reported price included VAT. We did not adjust the starting price for commissions in the home market because Dillinger did not demonstrate that the commissions, paid to related parties, were at arm's-length. Based on our verification of Dillinger's home market sales response, we made adjustments on certain sales to Dillinger's reported indirect selling expenses and weight conversion factors.

We also increased NV by U.S. packing costs in accordance with section 773(a)(6)(A) of the Act. We made adjustments to NV for differences in cost attributable to differences in physical characteristics of the merchandise, pursuant to section 773(a)(6)(C)(ii) of the Act. In accordance with the Department's practice, where for the most similar product match the difference in merchandise adjustment for any product comparison exceeded 20 percent, we based NV on CV.

As set forth in section 773(a)(1)(B)(i) of the Act and in the Statement of Administrative Action (SAA) at pages 829–831, to the extent practicable, the Department will calculate normal values based on sales at the same level of trade as the U.S. sales. When the Department is unable to find sales in the comparison market at the same level of trade as the U.S. sale(s), the Department may compare sales in the U.S. and foreign markets at different levels of trade. *See, Final Determination of Sales at Less Than Fair Value: Certain Pasta from Italy* (61 Fed. Reg. 30326, June 14, 1996) (''*Pasta from Italy*'').

In accordance with section 773(a)(7)(A), if sales at different levels of trade are compared, the Department will adjust the normal value to account for the difference in level of trade if two conditions are met. First, there must be differences between the actual selling functions performed by the seller at the level of trade of the U.S. sale and the level of trade of the normal value sale. Second, the differences between the levels of trade must affect price comparability as evidenced by a pattern of consistent price differences between sales at the different levels of trade in the market in which normal value is determined.

In its questionnaire responses, Dillinger stated that there were no differences in its selling activities by customer categories within each market. In order to independently confirm the absence of separate levels of trade within or between the U.S. and home markets, we examined Dillinger's questionnaire responses for indications that Dillinger's function as a seller differed among customer categories. Pursuant to section 773(a)(1)(B)(i) of the Act, and the SAA at 827, in identifying levels of trade for directly observed (*i.e.*, not constructed) export price and normal values sales, we considered the selling functions reflected in the starting price, before any adjustments. Where possible, we further examined whether each selling function was performed on a substantial portion of sales. (*See Proposed Rulemaking,* (61 Fed. Reg. at 7348)).

Dillinger sold to end-users in the U.S. market. In the home market, Dillinger sold to two categories of customers and performed the same selling functions between sales to all its home market customers, as well as to U.S. customers. Thus, our analysis of the questionnaire response leads us to conclude that sales within each market and between markets are not made at different levels of trade. Accordingly, we preliminarily find that all sales in the home market and the U.S. market are made at the same level of trade. Therefore, all price comparisons are at the same level of trade and an adjustment pursuant to section 773(a)(7)(A) is unwarranted.

Further, we added U.S. commissions to NV, and because we disallowed all home market commissions (because as noted above Dillinger did not demonstrate that the commissions paid to related parties were at arm's length), we deducted from NV the lesser of either (1) the amount of commission paid on a U.S. sale for a particular product, or (2) the amount of indirect selling expenses incurred on the home market sales for a particular product.

Cost of Production Analysis

Based on the fact that the Department had disregarded sales in the LTFV investigation (the most recently completed investigation/review of Dillinger at the time of initiation in this review) because they were made below the cost of production (COP), the Department found reasonable grounds in this review, in accordance with section 773(b)(2)(A)(ii) of the Act, to believe or suspect that respondent made sales in the home market at prices below the cost of producing the merchandise. As a result, the Department initiated an investigation to determine whether the respondent made home market sales during the POR at prices below their COP within the meaning of section 773(b) of the Act.

Before making any fair value comparisons, we conducted the COP analysis described below.

A. Calculation of COP

We calculated the COP based on the sum of respondents' cost of materials and fabrication for the foreign like product, plus amounts for home market selling, general, and administrative expenses (SG&A), and packing costs in accordance with section 773(b)(3) of the Act. Based on our verification of Dillinger's cost response, we adjusted Dillinger's reported COP to reflect certain adjustments to the cost of manufacturing, general and administrative expenses, and indirect selling expenses.

B. Test of Home Market Prices

We used the respondent's weighted-average COP, as adjusted (see above), for the period July 1994 to June 1995. We compared the weighted-average COP figures to home market sales of the foreign like product as required under section 773(b) of the Act. In determining whether to disregard home-market sales made at prices below the COP, we examined whether (1) within an extended period of time, such sales were made in substantial quantities, and (2) such sales were made at prices which permitted the recovery of all costs within a reasonable period of time. On a product-specific basis, we compared the COP to the home market prices (not including VAT), less any applicable movement charges, rebates, and global credits and debits.

C. Results of COP Test

Pursuant to section 773(b)(2)(C), where less than 20 percent of respondent's sales of a given product were at prices less than the COP, we did not disregard any below-cost sales of that product because we determined that the below-cost sales were not made in ''substantial quantities.'' Where 20 percent or more of a respondent's sales of a given product during the POR were at prices less than the COP, we found that sales of that model were made in ''substantial quantities,'' in accordance with section 773(b)(2)(B) of the Act, and were not at prices which would permit recovery of all costs within a reasonable period of time, in accordance with section 773(b)(2)(D) of the Act. When we found that below-cost sales had been made in ''substantial quantities'' and were not at prices which would permit recovery of all costs within a reasonable period of time, we disregarded the below-cost sales in accordance with section 773(b)(1) of the Act. Where all sales of a specific product were at prices

below the COP, we disregarded all sales of that product, and calculated NV based on CV.

D. Calculation of CV

In accordance with section 773(e) of the Act, we calculated CV based on the sum of respondents' cost of materials, fabrication, SG&A, U.S. packing costs, interest expenses and profit as reported in the U.S. sales database. In accordance with sections 773(e)(2)(A), we based SG&A and profit on the amounts incurred and realized by the respondent in connection with the production and sale of the foreign like product in the ordinary course of trade, for consumption in the foreign country. For selling expenses, we used the weighted-average home market selling expenses. Based on our verification of Dillinger's cost response, we adjusted Dillinger's reported CV to reflect adjustments to cost of manufacturing, general and administrative expenses, and indirect selling expenses. Where we compared CV to EP, we added U.S. commissions to CV, and then we deducted from CV the lesser of either (1) the amount of commission paid on a U.S. sale for a particular product, or (2) the amount of indirect selling expenses incurred on the home market sales for a particular product.

Currency Conversion

For purposes of the preliminary results, we made currency conversions based on the official exchange rates in effect on the dates of the U.S. sales as certified by the Federal Reserve Bank of New York. Section 773A(a) directs the Department to use a daily exchange rate in order to convert foreign currencies into U.S. dollars, unless the daily rate involves a ''fluctuation.'' In accordance with the Department's practice, we have determined as a general matter that a fluctuation exists when the daily exchange rate differs from a benchmark by 2.25 percent. The benchmark is defined as the rolling average of rates for the past 40 business days. When we determined a fluctuation existed, we substituted the benchmark for the daily rate. However, for the preliminary results in this review we have not determined that a fluctuation exists, and we have not substituted the benchmark for the daily rate.

Preliminary Results of the Review

As a result of this review, we preliminarily determine that no margin exists for AG der Dillinger Hüttenwerke during the period 8/1/94–7/31/95.

Parties to the proceeding may request disclosure within five days of the date of publication of this notice. Any interested party may request a hearing within 10 days of publication. Any hearing, if requested, will be held 44 days after the date of publication or the first business day thereafter. Case briefs and/or other written comments from interested parties may be submitted not later than 30 days after the date of publication. Rebuttal briefs and rebuttals to written comments, limited to issues raised in those comments, may be filed not later than 37 days after the date of publication of this notice. The Department will publish the final results of this administrative review, including its analysis of issues raised in any written comments or at a hearing, not later than 180 days after the date of publication of this notice.

The following deposit requirements will be effective upon publication of the final results of this antidumping duty review for all shipments of certain cut-to-length carbon steel plate from Germany, entered, or withdrawn from warehouse, for consumption on or after the publication date, as provided by section 751(a) of the Tariff Act: (1) The cash deposit rate for the reviewed company will be that established in the final results of review; (2) for exporters not covered in this review, but covered in the LTFV investigation or a previous review, the cash deposit rate will continue to be the company-specific rate from the LTFV investigation; (3) if the exporter is not a firm covered in this review, a previous review, or the original LTFV investigation, but the manufacturer is, the cash deposit rate will be the rate established for the most recent period for the manufacturer of the merchandise; (4) the cash deposit rate for all other manufacturers or exporters will continue to be 36.00 percent, the ''All Others'' rate made effective by the LTFV investigation. These requirements, when imposed, shall remain in effect until publication of the final results of the next administrative review.

This notice serves as a preliminary reminder to importers of their responsibility under 19 CFR 353.26 to file a certificate regarding the reimbursement of antidumping duties prior to liquidation of the relevant entries during this review period. Failure to comply with this requirement could result in the Secretary's presumption that reimbursement of antidumping duties occurred and the subsequent assessment of double antidumping duties.

This administrative review and notice are published in accordance with section 751(a)(1) of the Act and 19 CFR 353.22.

Dated: September 25, 1996.

Robert S. LaRussa,

Acting Assistant Secretary for Import Administration.

[FR Doc. 96–25539 Filed 10–3–96; 8:45 am]

BILLING CODE 3510–DS–P

[A–403–801]

Fresh and Chilled Atlantic Salmon From Norway; Preliminary Results of Antidumping Duty New Shipper Administrative Review

AGENCY: Import Administration, International Trade Administration, Department of Commerce.

ACTION: Notice of preliminary results of antidumping duty new shipper administrative review.

SUMMARY: In response to a request from one manufacturer/exporter, Nordic Group A/L (Nordic), the Department of Commerce (the Department) is conducting a new shipper administrative review of the antidumping duty order on fresh and chilled Atlantic salmon (salmon) from Norway. The review covers the period May 1, 1995 through October 31, 1995.

We have preliminarily determined that sales have not been made below the normal value (NV). If these preliminary results are adopted in our final results of administrative review, we will instruct the U.S. Customs Service to liquidate subject entries without regard to antidumping duties.

Interested parties are invited to comment on these preliminary results. Parties who submit argument in this proceeding are requested to submit with the argument (1) a statement of the issue and (2) a brief summary of the argument.

EFFECTIVE DATE: October 4, 1996.

FOR FURTHER INFORMATION CONTACT: Todd Peterson, or Thomas F. Futtner, Import Administration, International Trade Administration, U.S. Department of Commerce, 14th Street and Constitution Avenue, N.W., Washington, D.C. 20230, telephone: (202) 482–4195.

SUPPLEMENTARY INFORMATION:

Applicable Statute and Regulations

Unless otherwise indicated, all citations to the statute are references to the provisions effective January 1, 1995, the effective date of the amendments made to the Tariff Act of 1930 (the Act), by the Uruguay Round Agreements Act (URAA). In addition, unless otherwise indicated, all citations to the Department's regulations are to the current regulations, as amended by the

interim regulations published in the Federal Register on May 11, 1995 (60 FR 25130).

Background

On October 30, 1995, the Department received a request from Nordic for a new shipper review pursuant to section 751(a)(2)(B) of the Act and section 353.22(h) of the Department's interim regulations.

Section 751(a)(2) of the Act and section 353.22(h) of the Department's regulations govern determinations of antidumping duties for new shippers. These provisions state that, if the Department receives a request for review from an exporter or producer of the subject merchandise stating that it did not export the merchandise to the United States during the period of investigation (POI) and that such exporter or producer is not affiliated with any exporter or producer who exported the subject merchandise during that period, the Department shall conduct a new shipper review to establish an individual weighted-average dumping margin for such exporter or producer, if the Department has not previously established such a margin for the exporter or producer. To establish these facts, the exporter or producer must include with its request, with appropriate certification: (i) The date on which the merchandise was first entered, or withdrawn from warehouse, for consumption, or, if it cannot certify as to the date of first entry, the date on which it first shipped the merchandise for export to the United States; (ii) a list of the firms with which it is affiliated; and (iii) a statement from such exporter or producer, and from each affiliated firm, that it did not, under its current or a former name, export the merchandise during the POI.

Nordic's request was accompanied by information and certifications establishing the date on which it first shipped and entered subject merchandise, the names of Nordic's affiliated parties, and statements from Nordic and its affiliated parties that they did not, under any name, export the subject merchandise during the POI. Based on the above information, on December 13, 1995, the Department initiated this new shipper review of Nordic (60 FR 64018). The Department is now conducting this review in accordance with section 751 of the Act and section 353.22 of its regulations.

Petitioners have raised an issue pertaining to the *bona fide* nature of the U.S. sale under review. The Department has issued a supplemental questionnaire to Nordic's affiliated U.S. party, and is awaiting a response. The Department will incorporate any changes, as a result of this supplemental questionnaire, in the final results of review.

Scope of the Review

The product covered by this order is the species Atlantic salmon (Salmo salar) marketed as specified herein; the subject merchandise excludes all other species of salmon: Danube salmon; Chinook (also called ''king'' or ''quinnat''); Coho (silver); Sockeye (''redfish'' or ''blueback''); Humpback (''pink''); and Chum (''dog''). Atlantic salmon is whole or nearly-whole fish, typically (but not necessarily) marketed gutted, bled, and cleaned, with the head on. The subject merchandise is typically packed in fresh-water ice (''chilled''). Excluded from the subject merchandise are fillets, steaks, and other cuts of Atlantic salmon. Also excluded are frozen, canned, smoked or otherwise processed Atlantic salmon. Atlantic salmon is currently provided for under the Harmonized Tariff Schedule (HTS) subheading: 0302.12.00.02.09.

Verification

As provided in section 776(b) of the Act, we verified information provided by the respondent by using standard verification procedures, including on-site inspection of the respondent's facilities, the examination of relevant sales and financial records, and selection of original documentation containing relevant information. Our verification results are outlined in the public version of the verification report.

Export Price

We calculated the export price (EP) based on the price from Nordic to unaffiliated parties where these sales were made prior to importation into the United States, in accordance with section 772(a) of the Act. We calculated EP based on packed CIF prices to unaffiliated purchasers in the United States. We made deductions, where appropriate, for foreign inland freight, brokerage and handling, Norwegian export taxes, U.S. duties and air freight, in accordance with section 772(c)(2) of the Act. No other adjustments were claimed or allowed.

Normal Value

Because there were no other sales of the subject merchandise in the home or third country markets, we based normal value (NV) on constructed value, in accordance with section 773(e) of the Act.

Given that the statute is concerned specifically with the cost of production of the merchandise, we used the production costs incurred by the fish farmer, the actual producer of the subject merchandise, to calculate the cost of production (COP) benchmark. Nordic does not produce the salmon that it sells. Department practice in such situations is to sum the production costs of the producer (the fish farmer), the producer's selling, general and administrative expenses (SG&A), plus the SG&A of the seller, Nordic.

We calculated the COP for the farm by summing the costs for the 1993 generation salmon. These costs include smolt, feed, labor, and overhead. We allocated the costs on a per kilogram basis over net production quantities. We then adjusted these costs to reflect losses in the processing stage. The farmer's general and administrative expenses and net interest expenses incurred for the sale of salmon in 1995 were allocated to the salmon sold during the period of review. To the farmer's individual COP we added the cost of processing and packing to obtain a subtotal which was multiplied by a profit ratio, based on Nordic's profit on sales in 1995 of the same general category of products in accordance with section 773 (e)(2)(B)(i). To obtain the total constructed value, we added Nordic's SG&A expenses. No other adjustments were claimed or allowed.

Preliminary Results of the Review

As a result of this review, we preliminarily determine that the following margin exists for the period May 1, 1995, through October 31, 1995:

Manufacturer/producer/exporter	Percent margin
Nordic Group A/L (Nordic Group ASA)	0.00

Interested parties may request disclosure within 5 days of the date of publication of this notice and may request a hearing within 10 days of publication. Any hearing, if requested, will be held as early as convenient for the parties but not later than 34 days after the date of publication or the first business day thereafter. Case briefs and/or written comments from interested parties may be submitted not later than 20 days after the date of publication of this notice. Rebuttal briefs and rebuttal comments, limited to issues raised in the case briefs, may be filed no later than 27 days after the date of publication of this notice. The Department will issue the final results of this new shipper administrative review, including the results of its

analysis of issues raised in any such written comments or at a hearing.

Upon completion of this new shipper review, the Department will issue appraisement instructions directly to the U.S. Customs Service. The results of this review shall be the basis for the assessment of antidumping duties on entries of merchandise covered by the determination and for future deposits of estimated duties.

The cash deposit rate for Nordic will be the rate determined in the final results of this new shipper review, effective upon publication of those final results for all of Nordic's shipments of the subject merchandise entered, or withdrawn from warehouse, for consumption on or after the publication date of the final results of this new shipper administrative review, as provided by section 751(a)(2) of the Act.

This notice serves as a preliminary reminder to importers of their responsibility to file a certificate regarding the reimbursement of antidumping duties prior to liquidation of the relevant entries during this review period. Failure to comply with this requirement could result in the Secretary's presumption that reimbursement of antidumping duties occurred and the subsequent assessment of double antidumping duties.

This new shipper administrative review and notice are in accordance with section 751(a)(2) of the Tariff Act (19 U.S.C. 1675(a)(2)) and 19 CFR 353.22.

Dated: September 27, 1996.

Barbara Stafford,

Acting Assistant Secretary for Import Administration.

[FR Doc. 96–25532 Filed 10–3–96; 8:45 am]

BILLING CODE 3510–DS–P

[A–614–801]

Fresh Kiwifruit From New Zealand; Final Results of Antidumping Administrative Review

AGENCY: Import Administration, International Trade Administration, Commerce.

ACTION: Notice of final results of antidumping duty administrative review.

SUMMARY: On October 23, 1995, the Department of Commerce (the Department) published the preliminary results of its administrative review of the antidumping duty order on fresh kiwifruit from New Zealand. The review covers one exporter, the New Zealand Kiwifruit Marketing Board (NZKMB), and the period from June 1, 1993, through May 31, 1994. Based on our analysis of the comments received, we have revised the dumping margin for NZKMB.

EFFECTIVE DATE: October 4, 1996.

FOR FURTHER INFORMATION CONTACT: Paul M. Stolz or Thomas F. Futtner, Office of Antidumping Compliance, Import Administration, International Trade Administration, U.S. Department of Commerce, 14th Street and Constitution Avenue, N.W., Washington, DC 20230; telephone (202) 482–4474 or 482–3814, respectively.

SUPPLEMENTARY INFORMATION:

Background

On October 23, 1995, the Department published the preliminary results (60 FR 54333) of its administrative review of the antidumping duty order on fresh kiwifruit from New Zealand (57 FR 23203 (June 2, 1992)). The Department has now completed this administration review in accordance with section 751 of the Tariff Act of 1930, as amended (the Act). Unless otherwise indicated, all citations to the statute and to the Department's regulations are in reference to the provisions as they existed on December 31, 1994.

Scope of the Review

The product covered by the order under review is fresh kiwifruit. Processed kiwifruit, including fruit jams, jellies, pastes, purees, mineral waters, or juices made from or containing kiwifruit, are not covered under the scope of the order. The subject merchandise is currently classified under subheading 0810.90.20.60 of the Harmonized Tariff Schedule (HTS). Although the HTS number is provided for convenience and customs purposes, our written description of the scope of this review is dispositive.

Analysis of Comments Received

We invited interested parties to comment on the preliminary results. We received timely comments from respondents, the NZKMB, and petitioner, the California Kiwifruit Commission.

Comment 1

The petitioner alleged a number of ministerial errors pertaining to the application of the computer program used by the Department in its analysis. The first error alleged pertained to adjustments to U.S. prices and expenses, specifically: (a) certain currency conversions were made in error, (b) certain movement expenses were not included in calculations, and (c) other direct and indirect expenses were not included in calculations. The second error alleged pertained to the cost of production (COP) test: (a) certain elements of NZKMB's costs were not included in COP, (b) certain currency conversions were made in error, (c) certain direct and indirect expenses were not included in calculations and adjustments, and (d) certain adjustments were treated as expenses. The third error alleged pertained to foreign market value (FMV) selection, specifically: certain products were not properly matched in the concordance schedule.

Respondent alleged ministerial errors pertaining to two general areas. The first pertained to calculation of third country net prices: (a) two direct selling expense variables were not deducted from the third country net price, (b) the packing figure was incorrect, and (c) credit expenses were not properly deducted from net price. The second pertained to certain elements of the COP test: certain elements of COP were not properly included in the COP figure.

DOC Position

We agree with both petitioner and respondent. The Department has made corrections to the computer program in order to properly calculate COP and FMV. (See memo to the file dated August 27, 1996 for a detailed description of all adjustments made.)

Comment 2

Respondent asserts that although grower 21 refused to respond to the Department's COP questionnaire, ''punitive'' best information available (BIA) should not be applied for the per unit COP of grower 21. Respondent argues that it has cooperated in good faith and that it is not related to the growers from whom it purchases kiwifruit. Further, respondent asserts that it is without means to compel growers' cooperation.

Petitioner argues that not only is the application of ''punitive'' BIA appropriate, but that in recognition of the fact that the grower-respondent flatly refused to cooperate, a more adverse BIA should be used. Petitioner suggests that the highest cost components be drawn from all sampled growers and totaled to produce the BIA per unit cost for grower 21.

DOC Position

We disagree with respondent, but have modified the method of determining the BIA rate employed in

the preliminary determination to be consistent with the approach used in the less than fair value investigation. As provided in section 776(c) of the Act, the Secretary shall use BIA whenever: a party or any other person (1) refuses or is unable to produce information in a timely manner and in the form required, or (2) otherwise significantly impedes an investigation.

The purpose of BIA is not to punish. It is an investigative tool entrusted to the Department by Congress which encourages ''respondents to provide the Department with requested information in a timely, complete, and accurate manner, so that the investigating authority may determine antidumping margins within statutory deadlines.'' *Rhone Poulenc* v. *United States*, 899 F.2d 1185 (Fed. Cir. 1990).

In this review, sampled kiwifruit grower number 21 refused to respond to our COP questionnaire. We note that while the respondent claims it has no control over the many growers in New Zealand, it did state that all growers were required by New Zealand law to export through the NZKMB during this POR. The NZKMB is, therefore a related party to the growers, and each of the growers may be held accountable for adequate cooperation in these proceedings. *See Koyo Seiko* v. *United States*, 96–1116, Court of Appeals for the Federal Circuit. (August 12, 1996). Accordingly, we are required to assign to this grower a cost based on BIA.

In determining what to use as BIA, we generally followed the precedent established in the less-than-fair-value (LTFV) investigation. *See Final Results of Sales at Less Than Fair Value: Fresh Kiwifruit from New Zealand*, 57 Fed Reg. 13695, 133696 (April 17, 1992). In this case, we used as BIA, the highest calculated per unit COP for a responding grower in the same region as grower number 21. Since costs in the different growing regions tend to differ, we determined that using the highest COP from the same region as the non-responding grower would yield a reasonably adverse BIA.

Final Results of Review

As a result of comments received and programming errors corrected, we have revised our preliminary results.

Manufacturer/exporter	Margin
New Zealand Kiwifruit Marketing Board	0.00%

The Customs Service shall assess antidumping duties on all appropriate entries. Individual differences between U.S. price and FMV may vary from the percentage stated above. The Department will issue appraisement instructions concerning the respondent directly to the U.S. Customs Service.

Furthermore, the following deposit requirements will be effective for all shipments of the subject merchandise, entered, or withdrawn from warehouse, for consumption on or after the publication date of these final results of administrative review, as provided for by section 751(a)(1) of the Act: (1) the cash deposit rate for the reviewed firm will be 0.00 percent; and (2) the cash deposit rate for merchandise exported by all other manufacturers and exporters who are not covered by this review will be the ''all others'' rate of 98.60 percent established in the less-than-fair-value investigation in accordance with Department practice. *See Floral Trade Council* v. *United States.* 822 F. Supp. 766 (CIT) 1993, and *Federal Mogul Corporation* v. *United States*, 822 F. Supp. 782 (CIT 1993).

These deposit requirements shall remain in effect until publication of the final results of the next administrative review. This notice serves as the final reminder to importers of their responsibility under 19 CFR 353.26 to file a certificate regarding the reimbursement of antidumping duties prior to liquidation of the relevant entries during this review period. Failure to comply with this requirement could result in the Secretary's presumption that reimbursement of antidumping duties occurred and the subsequent assessment of double antidumping duties.

This notice also serves as a reminder to parties subject to administrative protective order (APO) of their responsibility concerning the disposition of proprietary information disclosed under APO in accordance with 19 CFR 353.34(d). Timely written notification or conversion to judicial protective order is hereby requested. Failure to comply with the regulations and the terms of the APO is a sanctionable violation.

This administrative review and notice are in accordance with section 751(a)(1) of the Act (19 U.S.C. 1675(a)(1)) and 19 CFR 353.22.

Dated: September 27, 1996.

Barbara R. Stafford,

Acting Assistant Secretary for Import Administration.

[FR Doc. 96–25540 filed 10–3–96; 8:45 am]

BILLING CODE 3510–DS–M

National Institute of Standards and Technology

Establishment of the Manufacturing Extension Partnership National Advisory Board

AGENCY: National Institute of Standards and Technology (NIST), Commerce.

ACTION: Notice of establishment of the Manufacturing Extension Partnership National Advisory Board.

SUMMARY: In accordance with the provisions of the Federal Advisory Committee Act, 5 U.S.C. App. 2, and the General Services Administration (GSA) rule on Federal Advisory Committee Management, 41 CFR Part 101–6, the Secretary of Commerce has determined that the establishment of the Manufacturing Extension Partnership (MEP) National Advisory Board (the ''Board'') is in the public interest in connection with the performance of duties imposed on the Department by law.

The Board will advise the Director of the National Institute of Standards and Technology (NIST) on MEP plans, programs, and policies.

The Board will consist of nine members appointed by the Director of NIST and its membership will be balanced to represent the views and needs of customers, providers, and others interested in industrial extension throughout the United States.

The Board will function solely as an advisory body, in compliance with the provisions of the Federal Advisory Committee Act.

DATES: The charter will be filed under the Act, fifteen days from the date of publication of this notice.

ADDRESSES: Manufacturing Extension Partnership Program, National Institute of Standards and Technology, Gaithersburg, MD 20899.

FOR FURTHER INFORMATION CONTACT: Linda Acierto, Manufacturing Extension Partnership, National Institute of Standards and Technology, Gaithersburg, MD 20899, telephone: 301–975–5020.

Authority: Federal Advisory Committee Act: 5 U.S.C. App. 2 and General Services Administration Rule: 41 CFR Part 101–6.

Dated: September 30, 1996.

Samuel Kramer,

Associate Director.

[FR Doc. 96–25531 Filed 10–3–96; 8:45 am]

BILLING CODE 3510–13–M

DEPARTMENT OF COMMERCE

National Oceanic and Atmospheric Administration

ENVIRONMENTAL PROTECTION AGENCY

Coastal Nonpoint Pollution Control Program: Proposed Findings; Documents, Environmental Assessments, and Findings of No Significant Impact

AGENCY: National Oceanic and Atmospheric Administration, U.S. Department of Commerce, and The U.S. Environmental Protection Agency.

ACTION: Notice of availability of proposed findings documents, Environmental assessments, and findings of no Significant impact on approval of Coastal Nonpoint Pollution Control Programs for Massachusetts, Maryland, the U.S. Virgin Islands, and the Commonwealth of the Northern Mariana Islands.

SUMMARY: Notice is hereby given of the availability of the Proposed Findings Documents, Environmental Assessments (EA's), and Findings of No Significant Impact for Massachusetts, Maryland, the U.S. Virgin Islands, and the Commonwealth of the Northern Mariana Islands. Coastal states were required to submit their coastal nonpoint programs to the National Oceanic and Atmospheric Administration (NOAA) and the U.S. Environmental Protection Agency (EPA) for approval in July 1995. The Findings documents were prepared by NOAA and EPA to provide the rationale for the agencies' decision to approve each state and territory coastal nonpoint pollution control program. Section 6217 of the Coastal Zone Act Reauthorization Amendments (CZARA), 16 U.S.C. 1455b, requires states and territories with coastal zone management programs that have received approval under section 306 of the Coastal Zone Management Act to develop and implement coastal nonpoint pollution control programs. The EA's were prepared by NOAA, pursuant to the National Environmental Policy Act (NEPA), 42 U.S.C. 4321 *et seq.*, to assess the environmental impacts associated with the approval of the coastal nonpoint pollution control programs submitted to NOAA and EPA by Massachusetts, Maryland, the U.S. Virgin Islands, and the Commonwealth of the Northern Mariana Islands.

NOAA and EPA have proposed to approve, with conditions, the coastal nonpoint pollution control programs submitted by Massachusetts, Maryland, the U.S. Virgin Islands, and the Commonwealth of the Northern Mariana Islands. The requirements of 40 CFR parts 1500–1508 (Council on Environmental Quality (CEQ) regulations to implement the National Environmental Policy Act) apply to the preparation of the Environmental Assessments. Specifically, 40 CFR 1506.6 requires agencies to provide public notice of the availability of environmental documents. This notice is part of NOAA's action to comply with this requirement.

Copies of the Proposed Findings Documents, Environmental Assessments, and Findings of No Significant Impact may be obtained upon request from: Joseph P. Flanagan, Coastal Programs Division (N/ORM3), Office of Ocean and Coastal Resource Management, NOS, NOAA, 1305 East-West Highway, Silver Spring, Maryland, 20910, tel. (301) 713–3121, x201.

DATES: Individuals or organizations wishing to submit comments on the proposed Findings or Environmental Assessments should do so by November 4, 1996.

ADDRESSES: Comments should be made to: Joseph A. Uravitch, Coastal Programs Division (N/ORM3), Office of Ocean and Coastal Resource Management, NOS, NOAA, 1305 East-West Highway, Silver Spring, Maryland, 20910, tel. (301) 713–3155, x195.

(Federal Domestic Assistance Catalog 11.419 Coastal Zone Management Program Administration)

Dated: September 30, 1996.

David L. Evans,

Acting Deputy Assistant Administrator for Ocean Services and Coastal Zone Management, National Oceanic and Atmospheric Administration.

Robert H. Wayland, III,

Director, Office of Wetlands, Oceans and Watersheds, Environmental Protection Agency.

[FR Doc. 96–25546 Filed 10–3–96; 8:45 am]

BILLING CODE 3510–12–M

National Weather Service Modernization and Associated Restructuring

AGENCY: National Weather Service (NWS), NOAA, Commerce.

ACTION: Notice and opportunity for public comment.

SUMMARY: The NWS is publishing the proposed certifications for the automation and consolidation of the following Weather Service offices. At each office the ASOS will be augmented at the FAA Weather Observation Service Level, determined appropriate. See the FAA Weather Observation Service Standards published by the FAA at 16 FR 32887 and the NWS Weather Service Modernization Criteria for automation published at 61 FR 39862.

(1) Athens Weather Service Office (WSO) which will be automated at FAA Weather Observation Service Level C and services consolidated with the future Atlanta and Greenville/Spartanburg Weather Forecast Offices (WFOs);

(2) Austin WSO which will be automated at FAA Weather Observation Service Level C and services consolidated with the future Austin/San Antonio, Houston/Galveston, Dallas/Fort Worth, and San Angelo WFOs;

(3) Residual Billings WSO which will be automated at FAA Weather Observation Service Level B and services consolidated with the future Billings WFO;

(4) Eugene WSO which will be automated at FAA Weather Observation Service Level C and services consolidated with the future Portland and Medford WFOs; and

(5) Olympia WSO which will be automated at FAA Weather Observation Service Level C and services consolidated with the future Seattle/Tacoma and Portland WFOs.

In accordance with Public Law 192–567, the public will have 60-days in which to comment on these proposed automation and consolidation certifications.

DATES: Comments are requested by December 3, 1996.

ADDRESSES: Requests for copies of the proposed automation and consolidation packages should be sent to Tom Beaver, Room 12314, 1325 East-West Highway, Silver Spring, MD 20910, telephone 301–713–0300. All comments should be sent to Tom Beaver at the above address.

FOR FURTHER INFORMATION CONTACT: Julie Scanlon at 301–713–1413.

SUPPLEMENTARY INFORMATION: In accordance with section 706 of Public Law 102–567, the Secretary of Commerce must certify that any automation or consolidation will not result in any degradation of service to the affected areas of responsibility and must publish the proposed automation an consolidation certifications in the FR. Automate means to replace employees weather service observations at a field office with automated weather service observation equipment and consolidate means to remove some personnel from a field office after the commissioning of one or more NEXRADs, the decommissioning of the radar operated by that office, if any, and the combination of that office's responsibilities with those of another field office. The documentation

supporting each proposed certification includes the following:

(1) A draft memorandum by the meteorologist(s)-in-charge recommending the certification, the final of which will be endorsed by the Regional Director and the Assistant Administrator of the NWS is appropriate, after consideration of public comments and completion of consultation with the Modernization Transition Committee (the Committee);

(2) a description of local weather characteristics and weather-related concerns which affect the weather services provided within the service area;

(3) a comparison of the services provided within the service area and the services to be provided after such action;

(4) a description of any recent or expected modernization of NWS operation which will enhance services in the service area;

(5) an identification of any area within the affected service area which would not receive coverage (at an elevation of 10,000 feet) by the next generation weather radar network;

(6) evidence, based upon operational demonstration of modernized NWS operations, which was considered in reaching the conclusion that no degradation in service will result from such action including the WSR–88D Radar Commissioning Report(s), User Confirmation of Services Report(s), and the Decommissioning Readiness Report (as applicable); and

(7) evidence, based upon operational demonstration of modernized NWS operations, which was considered in reaching the conclusion that no degradation in service will result from such action including the ASOS Commissioning Report; series of three letters between NWS and FAA confirming that weather services will continue in full compliance with applicable flight aviation rules after ASOS commissioning; Surface Aviation Observation Transition Checklist documenting transfer of augmentation and backup responsibility from NWS to FAA; successful resolution of ASOS user confirmation of services complaints; and an inplace supplementary data program at the responsible WFO(s).

(8) a letter appointing the liaison officer.

These proposed certifications do not include any report of the Committee which could be submitted in accordance with sections 706(b)(6) and 707 of Public Law 102–567. At their December 14, 1995 meeting the Committee members ''* * * resolved that the MTC modify its procedure to eliminate proposed certification consultations of noncontroversial closing, consolidations, relocations, and automation certifications but will provide final consultation on certifications after public comment and before final submission to the Secretary of Commerce.''

The above actions all are considered noncontroversial by the NWS. Also these proposed certifications do not include the documentation supporting them which is too voluminous to publish. Copies of the supporting documentation can be obtained through the contact listed above.

Once all public comments have been received and considered, the NWS will complete consultation with the Committee and determine whether to proceed with the final certification. If a decision to certify is made, the Secretary of Commerce must publish the final certification in the FR and transmit the certification to the appropriate Congressional committees prior to automating and consolidating these offices.

Dated: October 1, 1996.

Elbert W. Friday, Jr.,

Assistant Administrator for Weather Services.

[FR Doc. 96–25520 Filed 10–3–96; 8:45 am]

BILLING CODE 3510–12–M

DEPARTMENT OF DEFENSE

Office of the Secretary

[Transmittal No. 96–75]

36(b) Notification

AGENCY: Department of Defense, Defense Security Assistance Agency.

ACTION: Notice.

SUMMARY: The Department of Defense is publishing the unclassified text of a section 36(b) arms sales notification. This is published to fulfill the requirements of section 155 of P.L. 104–164 dated 21 July 1996.

FOR FURTHER INFORMATION CONTACT: Mr. A. Urban, DSAA/COMPT/FPD, (703) 604–6575.

The following is a copy of the letter to the Speaker of the House of Representatives, Transmittal 96–75, with attached transmittal and policy justification pages.

Dated: October 1, 1996.

L. M. Bynum,

Alternate OSD Federal Register Liaison Officer, Department of Defense.

BILLING CODE 5000–04–M

DEFENSE SECURITY ASSISTANCE AGENCY

WASHINGTON, DC 20301-2800

26 SEP 1996

In reply refer to:
I-04278/96ct

Honorable Newt Gingrich
Speaker of the House of
Representatives
Washington, D.C. 20515-6501

Dear Mr. Speaker:

Pursuant to the reporting requirements of Section 36(b)(1) of the Arms Export Control Act, we are forwarding herewith Transmittal No. 96-75, concerning the Department of the Air Force's proposed Letter(s) of Offer and Acceptance (LOA) to Saudi Arabia for defense articles and services estimated to cost $2.5 billion. Soon after this letter is delivered to your office, we plan to notify the news media.

Sincerely,

Thomas G. Rhame
Lieutenant General, USA
Director

Attachments

Same ltr to: House Committee on International Relations
Senate Committee on Appropriations
Senate Committee on Foreign Relations
House Committee on National Security
Senate Committee on Armed Services
House Committee on Appropriations

Transmittal No. 96-75

Notice of Proposed Issuance of Letter of Offer
Pursuant to Section 36(b)(1)
of the Arms Export Control Act

(i) Prospective Purchaser: Saudi Arabia

(ii) Total Estimated Value:

Major Defense Equipment*	$ 0 billion
Other	$2.5 billion
TOTAL	$2.5 billion

(iii) Description of Articles or Services Offered:
A continuation of contractor maintenance and training services to sustain/support the Royal Saudi Air Force air defense/C^3 system (command, control and communication system) to include operations, software support, training, maintenance, system hardware/software modifications/enhancements, facility operations and other related elements of program support necessary to ensure RSAF/USAF interoperability in joint or coalition operations.

(iv) Military Department: Air Force (DMS)

(v) Sales Commission, Fee, etc., Paid, Offered, or Agreed to be Paid: None

(vi) Sensitivity of Technology Contained in the Defense Article or Defense Services Proposed to be Sold:
None

(vii) Date Report Delivered to Congress: 26 SEP 1996

* as defined in Section 47(6) of the Arms Export Control Act.

POLICY JUSTIFICATION

Saudi Arabia - Continuation of Contractor Maintenance and Training Services

The Government of Saudi Arabia has requested the purchase of services relating to the continuation of contractor maintenance and training services to sustain/support the Royal Saudi Air Force air defense/C^3 system (command, control and communication system) to include operations, software support, training, maintenance, system hardware/software modifications/enhancements, facility operations and other related elements of program support necessary to ensure RSAF/USAF interoperability in joint or coalition operations. The estimated cost is $2.5 billion

This sale will contribute to the foreign policy and national security of the United States by helping to improve the security and self-defense of a friendly country.

The Royal Saudi Air Force will use the contractor provided services to maintain the operational capabilities of the air defense/C^3 system (command, control and communications). The contractor services will provide for a continuation of the required support from 1 June 1997 through 31 May 2002.

The contractor maintenance and training technical services will not alter the basic military balance in the region.

The principal contractor(s) will be selected through U.S. Government competitive procurement procedures. There are no offset agreements proposed to be entered into in connection with this potential sale.

Implementation of this sale will require the assignment of approximately 25 U.S. Government personnel and 300 contractor representatives in-Kingdom for the five year support period starting June 1997. These projected personnel requirements are approximately the same as the current number of personnel providing similar in-kingdom program support.

There will be no adverse impact on U.S. defense readiness as a result of this sale.

[FR Doc. 96–25550 Filed 10–3–96; 8:45 am]
BILLING CODE 5000–04–C

[Transmittal No. 96–74]

36(b) Notification

AGENCY: Department of Defense, Defense Security Assistance Agency.

ACTION: Notice.

SUMMARY: The Department of Defense is publishing the unclassified text of a section 36(b) arms sales notification. This is published to fulfill the requirements of section 155 of P.L. 104–164 dated 21 July 1996.

FOR FURTHER INFORMATION CONTACT: Mr. A. Urban DSAA/COMPT/FPD, (703) 604–6575.

The following is a copy of the letter to the Speaker of the House of Representatives, Transmittal 96–74, with attached transmittal and policy justification pages.

Dated: October 1, 1996.

L.M. Bynum,

Alternate OSD Federal Register Liaison Officer, Department of Defense.

BILLING CODE 5000–04–M

DEFENSE SECURITY ASSISTANCE AGENCY

WASHINGTON, DC 20301-2800

25 SEP 1996

In reply refer to:
I-04298/96ct

Honorable Newt Gingrich
Speaker of the House of
Representatives
Washington, D.C. 20515-6501

Dear Mr. Speaker:

Pursuant to the reporting requirements of Section 36(b)(1) of the Arms Export Control Act, we are forwarding herewith Transmittal No. 96-74 and under separate cover the classified annex thereto. This Transmittal concerns the Department of the Air Force's proposed Letter(s) of Offer and Acceptance (LOA) to Portugal for defense articles and services estimated to cost $258 million. Soon after this letter is delivered to your office, we plan to notify the news media of the unclassified portion of this Transmittal.

Sincerely,

Thomas G. Rhame
Lieutenant General, USA
Director

Attachments

Separate Cover:
Classified Annex

Same ltr to: House Committee on International Relations
Senate Committee on Appropriations
Senate Committee on Foreign Relations
House Committee on National Security
Senate Committee on Armed Services
House Committee on Appropriations

Transmittal No. 96-74

Notice of Proposed Issuance of Letter of Offer
Pursuant to Section 36(b)(1)
of the Arms Export Control Act

(i) Prospective Purchaser: Portugal

(ii) Total Estimated Value:

Major Defense Equipment*	$ 93 million
Other	$165 million
TOTAL	$258 million

(iii) Description of Articles or Services Offered:
Twenty-five used F-16A/B aircraft with engines, five spare F100-PW-220E aircraft engines, preparation and activation of aircraft for ferry to a rework/overhaul facility, the upgrade of the F-16A/B aircraft engine F100-PW-200 to the F100-PW-220E configuration including procurement and installation of retrofit kits, procurement and installation of aircraft and aircraft systems upgrades and modifications, spare and repair parts, support equipment, publications and technical documentation, personnel training and training equipment, U.S. Government and contractor engineering and logistics personnel services and other related elements of program support.

(iv) Military Department: Air Force (SAH)

(v) Sales Commission, Fee, etc., Paid, Offered, or Agreed to be Paid: None

(vi) Sensitivity of Technology Contained in the Defense Article or Defense Services Proposed to be Sold:
See Annex under separate cover.

(vii) Date Report Delivered to Congress: 25 SEP 1996

* as defined in Section 47(6). of the Arms Export Control Act.

POLICY JUSTIFICATION

Portugal - F-16A/B Aircraft

The Government of Portugal has requested the purchase of 25 used F-16A/B aircraft with engines, five spare F100-PW-220E aircraft engines, preparation and activation of aircraft for ferry to a rework/overhaul facility, the upgrade of the F-16A/B aircraft engine F100-PW-200 to the F100-PW-220E configuration including procurement and installation of retrofit kits, procurement and installation of aircraft and aircraft systems upgrades and modifications, spare and repair parts, support equipment, publications and technical documentation, personnel training and training equipment, U.S. Government and contractor engineering and logistics personnel services and other related elements of program support. The estimated cost is $258 million.

This sale will contribute to the foreign policy and national security objectives of the United States by improving the military capabilities of Portugal while enhancing weapon system standardization and interoperability with the U.S. forces in the region.

This sale will be a follow-on to Portugal's initial procurement of F-16A/B aircraft which have been delivered and are operational in-country. It will enable Portugal to augment its current F-16 aircraft inventory and to develop and maintain a continuous air defense capability within its national boundaries. Portugal will have no difficulty absorbing these additional aircraft into its armed forces.

The sale of these aircraft and support will not affect the basic military balance in the region.

This sale will include used U.S. Air Force aircraft and the rework/overhaul of these aircraft at a facility to be determined. There are no offset agreements proposed to be entered into in connection with this potential sale.

Implementation of this program will require the assignment of U.S. Government personnel and contractor representatives to Portugal to provide technical and logistics services, including flight instruction, after delivery of the first aircraft. The number of personnel and types of skills necessary to support the program will be determined jointly between U.S. and Portuguese representatives upon program implementation.

There will be no adverse impact on U.S. defense readiness as a result of this sale.

[FR Doc. 96–25553 Filed 10–3–96; 8:45 am]
BILLING CODE 5000–04–C

Department of the Air Force

Privacy Act of 1974; Amend System of Records.

AGENCY: Department of the Air Force, DOD.

ACTION: Amend system of records.

SUMMARY: The Department of the Air Force proposes to amend a system of records notices in its inventory of systems of records notices subject to the Privacy Act of 1974 (5 U.S.C. 552a), as amended.

DATES: The amendments will be effective on November 4, 1996, unless comments are received that would result in a contrary determination.

ADDRESSES: Send comments to the Air Force Access Programs Manager, HQ USAF/SCMI, 1250 Air Force Pentagon, Washington, DC 20330–1250.

FOR FURTHER INFORMATION CONTACT: Mrs. Anne Rollins at (703) 697–8674 or DSN 227–8674.

SUPPLEMENTARY INFORMATION: The complete inventory of Department of the Air Force system of records notices subject to the Privacy Act of 1974 (5 U.S.C. 552a), as amended, have been published in the Federal Register and are available from the address above.

The amendments are not within the purview of subsection (r) of the Privacy Act (5 U.S.C. 552a), as amended, which requires the submission of an altered systems reports. The specific changes to the system of records notice are set forth below followed by the system notice, as amended, published in its entirety.

Dated: October 1, 1996.

Patricia L. Toppings,

Alternate OSD Federal Register Liaison Officer, Department of Defense.

F035 AF MP C

SYSTEM NAME:

Military Personnel Records System *(November 23, 1993, 58 FR 61868).*

CHANGES:

* * * * *

SYSTEM LOCATION:

Delete entry and replace with 'Primary locations: Headquarters United States Air Force, 1040 Air Force Pentagon, Washington, DC 20330–1040.

Headquarters Air Force Personnel Center, 550 C Street W, Randolph Air Force Base, TX 78150–4703.

Air Reserve Personnel Center, 6760 East Irvington Place 4000, Denver, CO 80280–4000.

National Personnel Records Center, Military Personnel records, 9700 Page Boulevard, St. Louis, MO 63132–5100.

Headquarters of major commands and field operating agencies; consolidated base personnel offices; State Adjutant General Office of each respective state, District of Columbia and Commonwealth of Puerto Rico, and Air Force Reserve and Air National Guard units. Official mailing addresses are published as an appendix to the Air Force compilation of records systems notices.

Secondary locations: Officer Correspondence and Miscellaneous Document Group for active duty officers at Headquarters Air Force Personnel Center (HQ AFPC), and at Headquarters, United States Air Force (HQ USAF); Officer Selection Record Group (OSRGp) at HQ USAF, General Officer Group and at HQ USAF and HQ AFPC Air Force Colonel's Group; retired general officers Master Personnel Record Group (MPerRGp) at AFPC; Officer Command Selection Record Group (OCSRGp) at the respective Air Force base of assignment servicing Military Personnel Flight (MPF), and respective Air Force major command; Air Force active duty enlisted personnel MPerRGp and senior NCO selection folder at AFPC; Field Personnel Records Group (FPerRGp) at the respective unit of assignment or servicing MPF or Consolidated Reserve Personnel Office (CRPO); personnel in Temporary Disability Retired List, Missing in Action (MIA), Prisoner of War (POW), Dropped From Rolls status MPerGp at AFPC; Reserve officers MPerRGp at Air Reserve Personnel Center (ARPC); Reserve airmen MPerRGp at ARPC and FPerRGp at the respective unit of assignment or servicing MPF/CRPO; United States Air National Guard (ANGUS) officers MPerRGp at ARPC, OCSRGp at the respective State Adjutant General Office, and FPerRGp at the respective unit of assignment; ANGUS airmen MPerRGp at the respective State Adjutant General Office and FPerRGp at the respective unit of assignment; retired and discharged Air Force military personnel MPerRGp at National Personnel Records Center; and Air Force Academy cadets MPerRGp at unit of assignment MPF.'

* * * * *

CATEGORIES OF RECORDS IN THE SYSTEM:

Delete entry and replace with 'System contains substantiating documents such as forms, certificates, administrative orders and correspondence pertaining to appointment as a commissioned officer, warrant officer, Regular AF, AF Reserve or ANGUS, enlistment/reenlistment/extension of enlistment, assignment, Permanent Change of Station, Temporary Duty (TDY), promotion and demotion; identification card requests; casualty; duty status changes - Absent Without Leave/MIA/POW/Missing/Deserter; military test administration/results; service dates; separation; discharge; retirement; security; training; Professional Military Education (PME); On-The-Job Training; Technical, General Military Training; commissioning; driver; academic education; performance/effectiveness reports; unfavorable communications in the OSRGp; records corrections; formal/informal medical or dental treatment/examination; flying/rated status administration; extended active duty; emergency data; line of duty determinations; human/personnel reliability; career counseling; records transmittal; AF reserve administration; Air National Guard administration; board proceedings; personnel history statements; Veterans Administration compensations; disciplinary actions; record extracts; locator information; personal clothing/equipment items; passport; classification; grade data; Career Reserve applications/cancellations; traffic safety; Unit Military Training; travel voucher for TDY to Republic of Vietnam; dependent data; professional achievements; Geneva Convention card; Federal insurance; travel and duty restrictions; Conscientious Objector status; decorations and awards; badges; Favorable Communications (colonels only); Inter-Service transfers; pay and allowances; combat duty; leave; photographs, and Personnel Data System products.'

* * * * *

RETENTION AND DISPOSAL:

Delete entry and replace with 'Those documents designated as temporary in the prescribing directive remain in the records until their obsolescence (superseded, member terminates status, or retires) when they are removed and provided to the individual. Unfavorable communications in the OSRGp are transferred to Air Reserve Component and retained for one year following an officer's termination of status, or destroyed if officer retires or dies. Those documents designated as permanent remain in the military personnel records system permanently and are retired with the master personnel record group.'

* * * * *

F035 AF MP C

SYSTEM NAME:

Military Personnel Records System.

SYSTEM LOCATION:

Primary locations: Headquarters United States Air Force, 1040 Air Force Pentagon, Washington, DC 20330–1040.

Headquarters Air Force Personnel Center, 550 C Street W, Randolph Air Force Base, TX 78150–4703.

Air Reserve Personnel Center, 6760 East Irvington Place 4000, Denver, CO 80280–4000.

National Personnel Records Center, Military Personnel records, 9700 Page Boulevard, St. Louis, MO 63132–5100.

Headquarters of major commands and field operating agencies; consolidated base personnel offices; State Adjutant General Office of each respective state, District of Columbia and Commonwealth of Puerto Rico, and Air Force Reserve and Air National Guard units. Official mailing addresses are published as an appendix to the Air Force compilation of records systems notices.

Secondary locations: Officer Correspondence and Miscellaneous Document Group for active duty officers at Headquarters Air Force Personnel Center (HQ AFPC), and at Headquarters, United States Air Force (HQ USAF); Officer Selection Record Group (OSRGp) at HQ USAF, General Officer Group and at HQ USAF and HQ AFPC Air Force Colonel's Group; retired general officers Master Personnel Record Group (MPerRGp) at AFPC; Officer Command Selection Record Group (OCSRGp) at the respective Air Force base of assignment servicing Military Personnel Flight (MPF), and respective Air Force major command; Air Force active duty enlisted personnel MPerRGp and senior NCO selection folder at AFPC; Field Personnel Records Group (FPerRGp) at the respective unit of assignment or servicing MPF or Consolidated Reserve Personnel Office (CRPO); personnel in Temporary Disability Retired List, Missing in Action (MIA), Prisoner of War (POW), Dropped From Rolls status MPerGp at AFPC; Reserve officers MPerRGp at Air Reserve Personnel Center (ARPC); Reserve airmen MPerRGp at ARPC and FPerRGp at the respective unit of assignment or servicing MPF/CRPO; United States Air National Guard (ANGUS) officers MPerRGp at ARPC, OCSRGp at the respective State Adjutant General Office, and FPerRGp at the respective unit of assignment; ANGUS airmen MPerRGp at the respective State Adjutant General Office and FPerRGp at the respective unit of assignment; retired and discharged Air Force military personnel MPerRGp at National Personnel Records Center; and Air Force Academy cadets MPerRGp at unit of assignment MPF.

CATEGORIES OF INDIVIDUALS COVERED BY THE SYSTEM:

Air Force active duty military, Air Force Reserve and Air National Guard personnel.

CATEGORIES OF RECORDS IN THE SYSTEM:

System contains substantiating documents such as forms, certificates, administrative orders and correspondence pertaining to appointment as a commissioned officer, warrant officer, Regular AF, AF Reserve or ANGUS, enlistment/reenlistment/ extension of enlistment, assignment, Permanent Change of Station, Temporary Duty (TDY), promotion and demotion; identification card requests; casualty; duty status changes - Absent Without Leave/MIA/POW/Missing/ Deserter; military test administration/ results; service dates; separation; discharge; retirement; security; training; Professional Military Education (PME); On-The-Job Training; Technical, General Military Training; commissioning; driver; academic education; performance/effectiveness reports; unfavorable communications in the OSRGp; records corrections; formal/ informal medical or dental treatment/ examination; flying/rated status administration; extended active duty; emergency data; line of duty determinations; human/personnel reliability; career counseling; records transmittal; AF reserve administration; Air National Guard administration; board proceedings; personnel history statements; Veterans Administration compensations; disciplinary actions; record extracts; locator information; personal clothing/equipment items; passport; classification; grade data; Career Reserve applications/ cancellations; traffic safety; Unit Military Training; travel voucher for TDY to Republic of Vietnam; dependent data; professional achievements; Geneva Convention card; Federal insurance; travel and duty restrictions; Conscientious Objector status; decorations and awards; badges; Favorable Communications (colonels only); Inter-Service transfers; pay and allowances; combat duty; leave; photographs, and Personnel Data System products.

AUTHORITY FOR MAINTENANCE OF THE SYSTEM:

10 U.S.C. 8013, Secretary of the Air Force: Powers and duties; delegation by; as implemented by Air Force Instruction 36–2608, and E.O. 9397.

PURPOSE(S):

Military personnel records are used at all levels of Air Force personnel management within the agency for actions/processes related to procurement, education and training, classification, assignment, career development, evaluation, promotion, compensation, sustentation, separation and retirement.

ROUTINE USES OF RECORDS MAINTAINED IN THE SYSTEM, INCLUDING CATEGORIES OF USERS AND THE PURPOSE OF SUCH USES:

In addition to those disclosures generally permitted under 5 U.S.C. 552a(b) of the Privacy Act, these records or information contained therein may specifically be disclosed outside the DOD as a routine use pursuant to 5 U.S.C. 552a(b)(3) as follows:

Records may be disclosed to the Department of Veterans Affairs for research, processing and adjudication of claims, and providing medical care.

To dependents and survivors for determination of eligibility for identification card privileges.

To the Civilian Health and Medical Program of the Uniformed Services (CHAMPUS) for determination of eligibility and benefits.

To local Immigration/Naturalization Office for accountability and audit purposes.

To State Unemployment Compensation offices for verification of military service related information for unemployment compensation claims; Respective local state government offices for verification of Vietnam ''State Bonus'' eligibility.

To the Office of Personnel Management for verification of military service for benefits, leave, or Reduction in Force purposes, and to establish Civil Service employee tenure and leave accrual rate.

To the Social Security Administration to substantiate applicant's credit for social security compensation; Local state office for verification of military service relative to the Soldiers and Sailors Civil Relief Act. Information as to name, rank, Social Security Number, salary, present and past duty assignment, future assignments that have been finalized, and office phone number may be provided to military financial institutions who provide services to DOD personnel. For personnel separated, discharged or retired from the Air Force, information as to last known address may be provided to the military financial institutions upon certification by a financial institution officer that the facility has a dishonored check or defaulted loan.

To the Selective Service Agencies for computation of service obligation.

To the American National Red Cross for emergency assistance to military

members, dependents, relatives or other persons if conditions are compelling.

To the Department of Labor for claims of civilian employees formerly in military service, verification of service-related information for unemployment compensation claims, investigations of possible violations of labor laws and for pre-employment investigations.

To the National Research Council for medical research purposes.

To the Armed Forces Retirement Home to determine eligibility.

The ''Blanket Routine Uses'' published at the beginning of the Air Force's compilation of systems of records notices apply to this system.

POLICIES AND PRACTICES FOR STORING, RETRIEVING, ACCESSING, RETAINING, AND DISPOSING OF RECORDS IN THE SYSTEM:

STORAGE:

Maintained in visible file folders/binders, cabinets and on computer and computer output products.

RETRIEVABILITY:

Information in the system is retrieved by last name, first name, middle initial and Social Security Number.

Records stored at National Personnel Records Center are retrieved by registry number, last name, first name, middle initial and Social Security Number.

SAFEGUARDS:

Records are accessed by person(s) responsible for servicing the records system in performance of their official duties and by authorized personnel who are properly screened and cleared for need-to-know. Records stored in locked room, cabinets, and in computer storage devices protected by computer system software.

RETENTION AND DISPOSAL:

Those documents designated as temporary in the prescribing directive remain in the records until their obsolescence (superseded, member terminates status, or retires) when they are removed and provided to the individual. Unfavorable communications in the OSRGp are transferred to Air Reserve Component and retained for one year following an officer's termination of status, or destroyed if officer retires or dies. Those documents designated as permanent remain in the military personnel records system permanently and are retired with the master personnel record group.

SYSTEM MANAGER(S) AND ADDRESS:

Commander, Headquarters Air Force Military Personnel Center, 550 C Street W, Randolph Air Force Base, TX 78150–4703.

NOTIFICATION PROCEDURE:

Individuals seeking to determine whether this system of records contains information on themselves should address written inquiries to the Commander, Headquarters Air Force Military Personnel Center, 550 C Street W, Randolph Air Force Base, TX 78150–4703.

Individuals may also appear in person at the responsible official's office or the respective repository for records for personnel in a particular category during normal duty hours any day except Saturday, Sunday or national and local holidays. The Saturday and Sunday exception does not apply to Reserve and National Guard units during periods of training. The system manager has the right to waive these requirements for personnel located in areas designated as Hostile Fire Pay areas. Official mailing addresses are published as an appendix to the Air Force's compilation of systems of records notices.

RECORD ACCESS PROCEDURES:

Individuals seeking to access records about themselves contained in this system should address written requests to the Commander, Headquarters Air Force Military Personnel Center, 550 C Street W, Randolph Air Force Base, TX 78150–4703.

Individuals may also appear in person at the responsible official's office or the respective repository for records for personnel in a particular category during normal duty hours any day except Saturday, Sunday or national and local holidays. The Saturday and Sunday exception does not apply to Reserve and National Guard units during periods of training. The system manager has the right to waive these requirements for personnel located in areas designated as Hostile Fire Pay areas. Official mailing addresses are published as an appendix to the Air Force's compilation of systems of records notices.

CONTESTING RECORD PROCEDURES:

The Air Force rules for accessing records, and for contesting contents and appealing initial agency determinations are published in Air Force Instruction 37–132; 32 CFR part 806b; or may be obtained from the system manager.

RECORD SOURCE CATEGORIES:

Information is obtained from the subject of the file, supervisors, correspondence generated within the agency in the conduct of official business, educational institutions, and civil authorities.

EXEMPTION CLAIMED FOR THE SYSTEM:

None.

[FR Doc. 96–25526 Filed 10–3–96; 8:45 am]

BILLING CODE 5000–04–F

Office of the Secretary

Defense Intelligence Agency, Scientific Advisory Board Closed Meeting

AGENCY: Department of Defense, Defense Intelligence Agency.

ACTION: Notice.

SUMMARY: Pursuant to the provisions of Subsection (d) of Section 10 of Public Law 92–463, as amended by Section 5 of Public Law 94–409, notice is hereby given that a closed meeting of the DIA Scientific Advisory Board has been scheduled as follows:

DATES: Oct. 10–11, 1996 (8:00 a.m. to 5:009 p.m.).

ADDRESSES: The Defense Intelligence Agency, Bolling AFB, Washington, DC 20340–5100.

FOR FURTHER INFORMATION CONTACT: Maj. Michael W. Lamb, USAF, Executive Secretary, DIA Scientific Advisory Board, Washington, D.C. 20340–1328 (202)–373–4930.

SUPPLEMENTARY INFORMATION: The entire meeting is devoted to the discussion of classified information as defined in Section 552b(c)(I), Title 5 of the U.S. Code and therefore will be closed to the public. The Board will receive briefings on and discuss several current critical intelligence issues and advise the Director, DIA, on related scientific and technical matters.

Dated: October 1, 1996.

L.M. Bynum,

Alternate OSD Federal Register Liaison Office, Department of Defense.

[FR Doc. 96–25527 Filed 10–3–96; 8:45 am]

BILLING CODE 5000–04–M

Defense Logistics Agency

Privacy Act of 1974; Notice to Delete a Record System.

AGENCY: Defense Logistics Agency, DOD.

ACTION: Notice to delete a record system.

SUMMARY: The Defense Logistics Agency proposes to delete one system of records notice in its inventory of record systems subject to the Privacy Act of 1974 (5 U.S.C. 552a), as amended. The record system S866.15 DPSC, entitled Manufacturing Payroll System; Weekly Piece Work, has been disestablished.

DATES: The deletion is effective October 4, 1996.

ADDRESSES: Send comments to Privacy Act Officer, Office of the Staff Director, Public Affairs, HQ Defense Logistics Agency, 8725 John J. Kingman Road, Suite 2533, Fort Belvoir, VA 22060–6221.

FOR FURTHER INFORMATION CONTACT: Ms. Susan Salus at (703) 767–6183.

SUPPLEMENTARY INFORMATION: The Office of the Secretary of Defense notices for systems of records subject to the Privacy Act of 1974 (5 U.S.C. 552a), as amended, have been published in the Federal Register and are available from the address above.

The deletion is not within the purview of subsection (r) of the Privacy Act (5 U.S.C. 552a), as amended, which would require the submission of a new or altered system report.

Dated: October 1, 1996.

Patricia L. Toppings,

Alternate OSD Federal Register Liaison Officer, Department of Defense.

S866.15 DPSC

SYSTEM NAME:

Manufacturing Payroll System; Weekly Piece Work *(February 22, 1993, 58 FR 10902).*

Reason: The DLA clothing factory was disestablished. The pay records have been transferred to the National Archives and Records Administration, National Personnel Records Center, 111 Winnebago Street, St. Louis, MO 63118.

[FR Doc. 96–25525 Filed 10–3–96; 8:45 am]

BILLING CODE 5000–04–F

DEPARTMENT OF EDUCATION

National Advisory Committee on Institutional Quality and Integrity; Meeting

AGENCY: National Advisory Committee on Institutional Quality and Integrity, Education.

ACTION: Notice of public meeting.

SUMMARY: This notice sets forth the proposed agenda of the National Advisory Committee on Institutional Quality and Integrity. Notice of this meeting is required under section 10(a)(2) of the Federal Advisory Committee Act. This document is intended to notify the general public of its opportunity to attend this public meeting.

DATES AND TIMES: November 20–22, 1996, 8 a.m. until 6 p.m.

ADDRESSES: The Dupont Plaza Hotel, 1500 New Hampshire Avenue, NW., Washington, DC 20036.

FOR FURTHER INFORMATION CONTACT: Carol Sperry, Executive Director, National Advisory Committee on Institutional Quality and Integrity, U.S. Department of Education, 600 Independence Avenue, SW., Room 3905 ROB–3, Washington, DC 20202–7592, telephone: (202) 260–3636. Individuals who use a telecommunications device for the deaf (TDD) may call the Federal Information Relay Service at 1–800–877–8339 between 8 a.m. and 7 p.m., Eastern time, Monday through Friday.

SUPPLEMENTARY INFORMATION: The National Advisory Committee on Institutional Quality and Integrity is established under Section 1205 of the Higher Education Act (HEA), as amended by Public Law 102–325 (20 U.S.C. 1145). The Committee advises the Secretary of Education with respect to the establishment and enforcement of the criteria for recognition of accrediting agencies or associations under subpart 2 of part H of Title IV, HEA, the recognition of specific accrediting agencies or associations, the preparation and publication of the list of nationally recognized accrediting agencies and associations, and the eligibility and certification process for institutions of higher education under Title IV, HEA. The Committee also develops and recommends to the Secretary standards and criteria for specific categories of vocational training institutions and institutions of higher education for which there are no recognized accrediting agencies, associations, or State agencies, in order to establish eligibility for such institutions on an interim basis for participation in federally funded programs.

Agenda

The meeting on November 20–22, 1996 is open to the public. The Advisory Committee will review petitions of accrediting and State approval agencies relative to initial and continued recognition by the Secretary of Education. It also will review a petition by a Federal agency for bachelor's degree-granting authority. In all cases before the Committee, the Committee will hear presentations by any representatives who are present from the agency and any third parties who have requested to be heard. The following petitions are scheduled for review:

Nationally Recognized Accrediting Agencies and Associations

Petitions for Renewal of Recognition

1. Accrediting Association of Bible Colleges (requested scope of recognition: the accreditation of Bible colleges and institutes offering undergraduate programs)

2. American Association of Nurse Anesthetists (requested scope of recognition: the accreditation of generic nurse anesthesia educational programs/schools)

3. Accrediting Council on Education in Journalism and Mass Communications (requested scope of recognition: the accreditation of units within institutions offering professional undergraduate and graduate (master's) degree programs)

4. The American Dietetic Association (requested scope of recognition: the accreditation of coordinated undergraduate programs in dietetics and post-baccalaureate dietetics internships). The agency is also requesting an expansion of scope for (1) Coordinated Programs at the graduate level; (2) Dietetic Technician Programs (associate degree level); and (3) preaccreditation status for all programs.

5. American Physical Therapy Association (requested scope of recognition: the accreditation of professional programs for the physical therapist and programs for the physical therapy assistant)

6. Distance Education and Training Council (requested scope of recognition: the accreditation of home study schools, including associate, baccalaureate, or master's degree-granting home study schools)

7. Liaison Committee on Medical Education (requested scope of recognition: the accreditation of programs leading to the M.D. degree)

8. Middle States Association of Colleges and Schools, Commission on Higher Education (requested scope of recognition: the accreditation of higher education institutions in Delaware, District of Columbia, Maryland, New Jersey, New York, Pennsylvania, Puerto Rico, and the Virgin Islands)

9. National Environmental Health Science and Protection Accreditation Council (requested scope of recognition: the accreditation of baccalaureate programs in environmental health, science, and protection)

10. Transnational Association of Christian Colleges and Schools (requested scope of recognition: the accreditation of Christian postsecondary institutions that offer certificates, diplomas and associate, baccalaureate, and graduate degrees)

Interim Reports

An interim report is a follow-up report on an accrediting agency's compliance with specific criteria for recognition that was requested by the Secretary when the Secretary granted recognition to the agency.

1. American Academy for Liberal Education
2. American Association for Marriage and Family Therapy
3. American Bar Association, Council of the Section of Legal Education and Admission to the Bar
4. American Osteopathic Association, Bureau of Professional Education
5. American Podiatric Medical Association
6. Council on Naturopathic Medical Education
7. Montessori Accreditation Council for Teacher Education
8. National Accreditation Commission for Schools and Colleges of Acpuncture and Oriental Medicine
9. National Accrediting Commission of Cosmetology Arts and Sciences
10. National Association of Schools of Dance
11. National Council for Accreditation of Teacher Education
12. New York State Board of Regents

State Agencies Recognized for the Approval of Public Postsecondary Vocational Education

Petition for Renewal of Recognition

1. Oklahoma State Board of Regents for Higher Education.

Interim Report

1. New York State Board of Regents (Vocational Education Unit).

State Agencies Recognized for the Approval of Nurse Education

Interim Report

1. New York State Board of Regents (Nursing Education Unit).

In accordance with the Federal policy governing the granting of academic degrees by Federal agencies (approved by a letter from the Director, Bureau of the Budget, to the Secretary, Health, Education, and Welfare, dated December 23, 1954), the Secretary is required to establish a review committee to advise the Secretary concerning any legislation that may be proposed that would authorize the granting of degrees by a Federal agency. The review committee forwards its recommendation concerning a Federal agency's proposed degree-granting authority to the Secretary, who then forwards that committee's recommendation and the Secretary's recommendation to the Office of Management and Budget for review and transmittal to the Congress. The Secretary uses the Advisory Committee as the review committee required for this purpose. Accordingly, the Advisory Committee will review the following institution at this meeting.

Proposed Bachelor's Degree-Granting Authority

1. Joint Military Intelligence College, Bolling Air Force Base (for Bachelor of Science in Intelligence).

A request for comments on all agencies whose petitions, interim reports, and request for degree-granting authority are being reviewed during this meeting was published in the Federal Register dated July 9, 1996.

This notice invites third-party oral presentations before the Advisory Committee. It does not constitute another call for written comment. Requests for oral presentation before the Advisory Committee should be submitted in writing to Ms. Sperry at the address above by October 30, 1996. Requests should include the names of all persons seeking an appearance, the organization(s) they represent, and a brief summary of the principal points to be made during the oral presentation. Presenters are requested not to distribute written materials at the meeting. Any written materials presenters may wish to give to the Advisory Committee must be submitted to Ms. Sperry by October 30, 1996 (one original and 25 copies). Only documents presenters submit by that date will be considered by the Advisory Committee.

At the conclusion of the meeting, attendees may, at the discretion of the Committee chair, be invited to address the Committee briefly on issues pertaining to the functions of the Committee, as identified in the section above on Supplementary Information. Attendees interested in making such comments should inform Ms. Sperry before or during the meeting.

A record will be made of the proceedings of the meeting and will be available for public inspection at the Office of Postsecondary Education, U.S. Department of Education, 7th and D Streets SW., Room 3905, ROB 3, Washington, DC, between the hours of 8:00 a.m. and 4:30 p.m., Monday through Friday, except Federal holidays.

Authority: 5 U.S.C.A. Appendix 2.

David A. Longanecker,

Assistant Secretary for Postsecondary Education.

[FR Doc. 96–25426 Filed 10–3–96; 8:45 am]

BILLING CODE 4000–01–M

National Library of Education Advisory Task Force Meeting

AGENCY: National Library of Education Advisory Task Force, Education.

ACTION: Notice of meeting.

SUMMARY: This notice sets forth the schedule and proposed agenda for the fourth meeting of the National Library of Education Adviory Task Force (Task Force). This notice also describes the functions of the Task Force. Notice of this meeting is required under Section 10(a)(2) of the Federal Advisory Committee Act and is intended to notify the public of their opportunity to attend.

DATES AND TIME: October 30, 1996, 9:00 a.m. to 5:00 p.m.; October 31, 1996, 9:00 a.m. to 5:00 p.m.; November 1, 1996, 9:00 a.m. to 12:00 p.m.

ADDRESSES: University Library, Fisk University, Nashville, Tennessee.

FOR FURTHER INFORMATION CONTACT: E. Stephen Hunt, National Library of Education, 555 New Jersey Avenue., NW., Washington, DC 20208–5523. Telephone: (202) 219–1882; FAX: (202) 219–1970.

SUPPLEMENTARY INFORMATION: The National Library of Education Advisory Task Force is authorized by Part E, Section 951(h) of the Educational Research, Development, Dissemination, and Improvement Act of 1994. The Task Force prepares a set of recommendations on the establishment and development of the National Library of Education for presentation to the Assistant Secretary for the Office of Educational Research and Improvement.

The meeting of the Task Force is open to the public. The agenda for October 30–November 2, 1996 includes the adoption of the Task Force Report and planning for marketing the Report.

A final agenda will be available from the offices of the National Library of Education on October 14, 1996.

Records are kept of all Task Force proceedings, and are available for public inspection at the central office of the National Library of Education, 555 New Jersey Ave., NW., Washington, D.C. 20208–5523 between the hours of 8:30 a.m.–4:30 p.m.

Sharon P. Robinson,

Assistant Secretary, Office of Educational Research and Improvement.

[FR Doc. 96–25482 Filed 10–3–96; 8:45 am]

BILLING CODE 4000–01–M

DEPARTMENT OF ENERGY

Notice of Program Interest—Research and Development to Develop Advanced Materials for Low Emissions, High Efficiency Diesel Engine Components

AGENCY: Oak Ridge Operations Office, DOE.

ACTION: Notice of Program Interest—Research and Development to Develop Advanced Materials for Low Emissions,

High Efficiency Diesel Engine Components.

SUMMARY: This notice announces the Department of Energy's interest in receiving unsolicited applications for a cooperative agreement for research and development on advanced materials as enabling technology for the design and development of components for low emissions, high efficiency diesel engines. The Office of Transportation Technologies, Office of Heavy Vehicle Technologies (OTT OHVT) has an active program to develop by 2001 the technology for advanced LE–55 diesel engines with 55 percent efficiency and low emissions levels of 2.0g/bhp-hr NO_X and 0.05 g/bhp-hr particulates. The goal of this program is to develop advanced material applications in diesel engine components to enable the design of cleaner, more efficient engines. The goal is also for the LE–55 engine to run on natural gas with efficiency approaching that of diesel fuel. OTT OHVT also recognizes a significant opportunity for reduction in petroleum consumption by dieselization of pickup trucks, vans, and sport utility vehicles. Application of the diesel engine to class 1, 2, and 3 trucks is expected to yield a 35% increase in fuel economy per vehicle. The foremost barrier to diesel use in this market is emission control. Once an engine is made certifiable, subsequent challenges will be in cost; noise, vibration, and harshness (NVH); and performance. The design of advanced components for high efficiency diesel engines has, in some cases, pushed the performance envelope for materials of construction past the point of reliable operation. Higher mechanical and tribological stresses and higher temperatures of advanced designs limit the engine designer; advanced materials allow the design of components that may operate reliably at higher stresses and temperatures, thus enabling more efficient engine designs. Advanced materials also offer the opportunity to improve the emissions, NVH and performance of diesel engines for pickup trucks, vans, and sport utility vehicles.

DATES: This notice expires at 4:00 p.m. EDT on October 14, 1996, and applications may be submitted at any time prior to the expiration date.

ADDRESSES: Submit five (5) copies of the application prior to the expiration date of this notice to: U.S. Department of Energy, Oak Ridge Operations Office, Procurement and Contracts Division, Environmental Acquisitions Branch, P.O. Box 2001, Oak Ridge, TN 37831–8758, Attn: Karen Stanford Shears, Contract Specialist, telephone (423) 241–6411.

FOR FURTHER INFORMATION CONTACT: Mary Rawlins, DOE Oak Ridge Operations Office, telephone: 423–576–4507; or Robert Schulz, DOE Headquarters, telephone 202–586–8051.

SUPPLEMENTARY INFORMATION: Controlling the increasing consumption of petroleum is an important national concern. The U.S. heavy duty transport sector consumes more than 27 percent of U.S. transportation energy and is heavily dependent on petroleum-based fuels, primarily No. 2 diesel fuel. Heavy duty transport is second only to automobiles in use of petroleum. Energy use by heavy duty transport modes has increased steadily since the early 1970s, despite significant gains in diesel engine efficiency. Diesel engines are highly efficient and, when operating on diesel fuel, have low CO_2, CO and hydrocarbon emissions. However, diesel engines are major emitters of oxides of nitrogen (NO_X) and particulate matter. Overall, the heavy duty transport sector is responsible for a substantial share of U.S. transportation emissions—54 percent of NO_X and 47 percent of particulate matter.

The light truck market segment, classes 1–3, has grown from 23% of the domestic light duty vehicle sales in 1984 to over 42% in 1995 representing a substantial influx of low fuel economy vehicles into the public and private fleets. This trend could increase the U.S. dependence on foreign petroleum even beyond the current projections. Application of diesel engines to light trucks could result in fuel savings per vehicle of 35% or more if modern, high-efficiency diesel technology is utilized. Diesels with efficiencies of 39–42% would replace gasoline engines that achieve less than 30% efficiency over much of their operating range.

Several substantial technical barriers must be resolved before diesels can or will be used extensively in this class of vehicle, including emissions, NVH, and cost. Advanced materials may offer a solution to these barriers. The goal of this program is to develop advanced material applications in diesel engine components to enable the design of cleaner, more efficient engines. Advanced materials may include ceramics, intermetallic alloys, advanced metal alloys, or ceramic or metal coatings. Components may include in-cylinder components, valve-train components, fuel system components, exhaust system components, and air handling systems.

The proposed research should address the following areas: (1) Component design, (2) selection of candidate materials, (3) material down selection, development, and optimization, (4) prototype component fabrication, and (5) rig or engine testing of components.

Applications must contain the following information: (1) Description of the proposed research, including roles of suppliers, consultants, and subcontractors, (2) a critical review of existing and emerging technologies on a world-wide basis that may compete with the proposed technology. The review should conclude that the proposed research is timely, does not duplicate work being pursued elsewhere, and is more competitive than existing or emerging technology; (3) technical and economic evaluations for industrial implementation indicating the potential for improved energy efficiency, reduction of engine emissions and alternative fuels utilization. The economic evaluation should also contain evidence and a schedule showing that the proposed technology has potential for commercialization; (4) an estimate of the potential energy saving attributable to the commercialization of the proposed technology; (5) a Statement of Work and Management Plan including a project schedule, work breakdown structure, budget plan, milestones, and decision points; (6) applicants or other participant cost-sharing commitments, which should be no less than 50 percent, and a description of the form of cost sharing (e.g., cash, in-kind); (7) applicants proposed structure for vertical or horizontal teaming/collaborating with co-participants or suppliers (a list of prospective suppliers should be provided); (8) an estimate of the total research and development cost required to reach the stage of technology development at which government funding will no longer be required; (9) the qualification and capability of the applicants organizations and individuals responsible for performing the work; (10) evidence of interest in the proposed research by industry, (11) evidence of the applicants eligibility to receive financial assistance from the U.S. DOE under Section 2306 of the Energy Policy Act of 1992; and (12) Standard Form 424, DOE F 4620.1, U.S. Department of Energy Budget Page, DOE Form 1600.5 ''Assurance of Compliance,'' Certifications Regarding Lobbying; Debarment, Suspension and Other Responsibility Matters; and Drug Free Workplace Requirements executed prior to any award. Additional information may be requested by DOE during review of applications.

Applications will be evaluated individually as they are received. DOE

will evaluate the applications based on the following factors: (1) Overall merit; for example: (a) The concept's applicability and commercial potential to the U.S. diesel engine and material and component supplier industries, (b) the interest of industry as evidenced by letters of support, (c) the proposed cost share; (2) the proposed project objectives and the probability of achieving the stated objectives; (3) the applicants research capabilities and qualifications; and (4) the applicant's facilities. DOE will select only proposals which are meritorious based upon the above evaluation and which represent a unique or innovative idea, method, or approach. If separate areas of research are called for by this solicitation, then a physically separate application for each area of research proposed is required. However, two or more areas of research may be combined if strong interfaces or interrelationships can be clearly shown.

This notice infers no commitment by DOE to make an award. A decision to award will be determined after thorough evaluation of applications received and the availability of funds. DOE reserves the right to support or not support any applications. DOE assumes no responsibility for any cost associated with the preparation of applications. Award will be subject to the Energy Policy Act Section 2306, which contains the following limitation: ''Section 2306. Limits on Participation by Companies—A company shall be eligible to receive financial assistance under sections XX through XXIII of this Act only if—(1) The Secretary finds that the company's participation in any program under such titles would be in the economic interest of the United States, as evidenced by investments in the United States in research, development, and manufacturing (including, for example, the manufacture of major components or subassemblies in the United States); significant contributions to employment in the United States; an agreement with respect to any technology arising from assistance provided under this section to promote the manufacture within the United States of products resulting from that technology (taking into account the goals of promoting the competitiveness of United States industry), and to procure parts and materials from competitive suppliers; and (2) either—(a) The company is a United States-owned company; or (b) the Secretary finds that the company is incorporated in the United States and has a parent company which is incorporated in a country which affords to United States-owned companies opportunities, comparable to those afforded to any other company, to participate in any joint venture similar to those authorized under this Act; affords to United States-owned companies local investment opportunities comparable to those afforded to any other company; and affords adequate and effective protection for the intellectual property rights of United States-owned companies.''

Issued in Oak Ridge, Tennessee on September 27, 1996.

Sylvia G. Galde,

Acting Division Director, Procurement and Contracts Division, Oak Ridge Operations.

[FR Doc. 96–25500 Filed 10–3–96; 8:45 am]

BILLING CODE 6450–01–P

Environmental Management Advisory Board; Meeting

AGENCY: Department of Energy.

ACTION: Notice of open meeting.

SUMMARY: Pursuant to the provisions of the Federal Advisory Committee Act (Public Law 92–463, 86 Stat. 770), notice is hereby given of the following Advisory Committee meeting:

Name: Environmental Management Advisory Board.

Date and Times: Wednesday, October 23, 1996, 8:30 a.m.–5:30 p.m.

Place: U.S. Department of Energy/Forrestal Building, 1000 Independence Avenue, SW.; Room 1E–245, Washington, DC 20585, (202) 586–4400.

FOR FURTHER INFORMATION CONTACT: James T. Melillo, Special Assistant to the Assistant Secretary for Environmental Management; Environmental Management Advisory Board (EMAB), EM–22, 1000 Independence Avenue, SW., Washington, DC 20585, (202) 586–4400. The Internet address is: James.Melillo@em.doe.gov.

SUPPLEMENTARY INFORMATION: *Purpose of the Board.* The purpose of the Board is to provide the Assistant Secretary for Environmental Management (EM) with advice and recommendations on issues confronting the Environmental Management program and the Programmatic Environmental Management Impact Statement, from the perspectives of affected groups and state, local, and tribal governments. The Board will help to improve the Environmental Management Program by assisting in the process of securing consensus recommendations, and providing the Department's numerous publics with opportunities to express their opinions regarding the Environmental Management Program.

Tentative Agenda

Wednesday, October 23, 1996

8:30 a.m.—Co-Chairmen Open Public Meeting.

8:35 a.m.—Opening Remarks, Assistant Secretary for Environmental Management.

10:15 a.m.—Ten Year Plan Committee Presentation and Discussion.

11:45 a.m.—Privatization Committee Presentation and Discussion.

12:30 p.m.—Lunch.

1:30 p.m.—Science Committee Interim Report and Discussion.

2:30 p.m.—Strategic Integration Committee Interim Report and Discussion.

3:30 p.m.—Technology Development & Transfer Committee Report and Discussion.

4:00 p.m.—Board Business.

4:15 p.m.—Update on EM Charge Back Issues.

4:45 p.m.—Public Comment Session.

5:30 p.m.—Meeting Adjourns.

A final agenda will be available at the meeting.

Public Participation: The meeting is open to the public. Written statements may be filed with the Board either before or after the meeting. Members of the public who wish to make oral statements pertaining to agenda items should either contact James T. Melillo at the address or telephone number listed above, or call 1–(800) 736–3282, the Center for Environmental Management Information and register to speak during the public comment session of the meeting. Individuals may also register on October 23, 1996 at the meeting site. Every effort will be made to hear all those wishing to speak to the Board, on a first-come, first-serve basis. Those who call in and reserve time will be given the opportunity to speak first. The Board Co-Chairs are empowered to conduct the meeting in a fashion that will facilitate the orderly conduct of business.

Transcripts and Minutes: A meeting transcript and minutes will be available for public review and copying at the Freedom of Information Public Reading Room, 1E–190, Forrestal Building, 1000 Independence Avenue, SW., Washington, DC 20585 between 9:00 a.m. and 4:00 p.m., Monday through Friday, except Federal holidays.

Issued at Washington, DC on September 30, 1996.

Rachel Murphy Samuel,

Acting Deputy Advisory Committee Management Officer.

[FR Doc. 96–25499 Filed 10–3–96; 8:45 am]

BILLING CODE 6450–01–P

Federal Energy Regulatory Commission

[Docket No. CP96–811–000]

Questar Pipeline Company; Notice of Request Under Blanket Authorization

September 30, 1996.

Take notice that on September 23, 1996, Questar Pipeline Company (Questar), 79 South State Street, Salt Lake City, Utah 84111 filed in the above

docket, a request pursuant to §§ 157.205 and 157.212(a) of the Commission's Regulations under the Natural Gas Act for authorization to acquire and operate certain metering and regulating (M&R) facilities, in accordance with a Bill of Sale dated May 20, 1996, between Questar and Mountain Fuel Supply Company (MFS), Questar's local distribution company affiliate, that serve the FMC Corporation (FMC) located in Sweetwater County, Wyoming, all as more fully set forth in the request that is on file with the Commission and open to public inspection.

Specifically, Questar explains that the recent acquisition of the M&R facilities allows it to have direct operational control of the facilities. Since the acquisition, Questar further explains that it has continued the delivery of natural gas directly to FMC. Questar states that MFS no longer own or operates any facilities associated with natural-gas deliveries to FMC.

Questar states that the M&R facilities comprise a 6-inch meter run and meter building, a Barton Dryflow meter, a 3-inch Fisher flow controller with associated valves and piping, primary and secondary one-inch and two-inch Fisher regulator bank assemblies, a 500 gallon odorant storage tank and other appurtenant facilities specifically listed in a Bill of Sale. In accordance with this Bill of Sale, Questar also explains that MFS sold the M&R facilities to Questar for $16,945 and that the acquisition and continued operation of the subject M&R facilities has not required any construction activities, but, rather has involved only the contractual transfer of facility ownership, thus resulting in no effect on the existing environment.

Questar further states that it provides service to FMC in accordance with an existing interruptible Rate Schedule T–2 transportation service agreement dated May 6, 1987. It is asserted that the service agreement provides for the interruptible transportation of up to 7,000 Mcf per day of natural gas on behalf of FMC from all receipt points on Questar's transmission system to the existing FMC delivery point and that natural-gas volumes may also be transported to FMC delivery point through use of capacity-release arrangements on Questar's transmission system.

Any person or the Commission's staff may, within 45 days after issuance of the instant notice by the Commission, file pursuant to Rule 214 of the Commission's Rules of Practice and Procedure (18 CFR 385.214) a motion to intervene or notice of intervention and pursuant to § 157.205 of the Regulations under the Natural Gas Act (18 CFR 157.205) a protest to the request.

If no protest is filed within the time allowed therefor, the proposed activity is deemed to be authorized effective on the day after the time allowed for filing a protest. If a protest is filed and not withdrawn within 30 days after the time allowed for filing a protest, the instant request shall be treated as an application for authorization pursuant to section 7 of the Natural Gas Act.

Lois D. Cashell,

Secretary.

[FR Doc. 96–25457 Filed 10–3–96; 8:45 am]

BILLING CODE 6717–01–M

Federal Energy Regulatory Commission

[Docket No. ER96–2591–000]

Strategic Energy Management, Inc.; Notice of Issuance of Order

September 30, 1996.

Strategic Energy Management, Inc. (SEMI) submitted for filing a rate schedule under which SEMI will engage in wholesale electric power and energy transactions as a marketer. SEMI also requested waiver of various Commission regulations. In particular, SEMI requested that the Commission grant blanket approval under 18 CFR Part 34 of all future issuances of securities and assumptions of liability by SEMI.

On September 13, 1996, pursuant to delegated authority, the Director, Division of Applications, Office of Electric Power Regulation, granted requests for blanket approval under Part 34, subject to the following:

Within thirty days of the date of the order, any person desiring to be heard or to protest the blanket approval of issuances of securities or assumptions of liability by SEMI should file a motion to intervene or protest with the Federal Energy Regulatory Commission, 888 First Street, NE., Washington, DC 20426, in accordance with Rules 211 and 214 of the Commission's Rules of Practice and Procedure (18 CFR 385.211 and 385.214).

Absent a request for hearing within this period, SEMI is authorized to issue securities and assume obligations or liabilities as a guarantor, endorser, surety or otherwise in respect of any security of another person; provided that such issuance or assumption is for some lawful object within the corporate purposes of the applicant, and compatible with the public interest, and is reasonably necessary or appropriate for such purposes.

The Commission reserves the right to require a further showing that neither public nor private interests will be adversely affected by continued approval of SEMI's issuances of securities or assumptions of liability.

Notice is hereby given that the deadline for filing motions to intervene or protests, as set forth above, is October 15, 1996. Copies of the full text of the order are available from the Commission's Public Reference Branch, 888 First Street, NE., Washington, DC 20426.

Lois D. Cashell,

Secretary.

[FR Doc. 96–25458 Filed 10–3–96; 8:45 am]

BILLING CODE 6717–01–M

[Docket No. ER96–2241–000]

Thicksten Grimm Burgum, Inc.; Notice of Issuance of Order

September 30, 1996.

Thicksten Grimm Burgum, Inc. (Thicksten) submitted for filing a rate schedule under which Thicksten will engage in wholesale electric power and energy transactions as a marketer. Thicksten also requested waiver of various Commission regulations. In particular, Thicksten requested that the Commission grant blanket approval under 18 CFR Part 34 of all future issuances of securities and assumptions of liability by Thicksten.

On September 16, 1996, pursuant to delegated authority, the Director, Division of Applications, Office of Electric Power Regulation, granted requests for blanket approval under Part 34, subject to the following:

Within thirty days of the date of the order, any person desiring to be heard or to protest the blanket approval of issuances of securities or assumptions of liability by Thicksten should file a motion to intervene or protest with the Federal Energy Regulatory Commission, 888 First Street, NE., Washington, DC 20426, in accordance with Rules 211 and 214 of the Commission's Rules of Practice and Procedure (18 CFR 385.211 and 385.214).

Absent a request for hearing within this period, Thicksten is authorized to issue securities and assume obligations or liabilities as a guarantor, endorser, surety, or otherwise in respect of any security of another person; provided that such issuance or assumption is for some lawful object within the corporate purposes of the applicant, and compatible with the public interest, and is reasonably necessary or appropriate for such purposes.

The Commission reserves the right to require a further showing that neither public nor private interests will be

adversely affected by continued approval of Thicksten's issuances of securities or assumptions of liability.

Notice is hereby given that the deadline for filing motions to intervene or protests, as set forth above, is October 16, 1996. Copies of the full text of the order are available from the Commission's Public Reference Branch, 888 First Street, NE., Washington, DC 20426.

Lois D. Cashell,

Secretary.

[FR Doc. 96–25459 Filed 10–3–96; 8:45 am]

BILLING CODE 6717–01–M

[Docket No. ER95–1159–000, et al.]

Colorado Public Service Company, et al.; Electric Rate and Corporate Regulation Filings

September 27, 1996.

Take notice that the following filings have been made with the Commission:

1. Colorado Public Service Company

[Docket No. ER95–1159–000]

Take notice that on August 28, 1996, Colorado Public Service Company tendered for filing an amendment in the above-referenced docket.

Comment date: October 10, 1996, in accordance with Standard Paragraph E at the end of this notice.

2. Enron Corp. and Portland General Corporation

[Docket No. EC96–36–000]

Take notice that on September 20, 1996, Enron Corp. (Enron) and Portland General Corporation (Portland General), on behalf of their respective public utility subsidiaries, Enron Power Marketing, Inc. and Portland General Electric Company (collectively ''the Applicants''), tendered for filing pursuant to Section 203 of the Federal Power Act, 16 U.S.C. 824(b) (1994), and Part 33 of the Commission's Regulations, 18 CFR Part 33, a Joint Application for an order approving a proposed merger of Enron and Portland General.

Pursuant to an Agreement and Plan of Merger, Enron and Portland General will merge through an exchange of stock, with Enron continuing as the surviving corporation. The Applicants state that they have submitted the information required by Part 33 of the Commission's Regulations in support of the application.

Comment date: October 18, 1996, in accordance with Standard Paragraph E at the end of this notice.

3. Carolina Power & Light Company

[Docket No. ER96–2760–000]

Take notice that on September 20, 1996, Carolina Power & Light Company (CP&L) supplemented the filing previously made in this docket on August 20, 1996.

Copies of the filing were served upon the North Carolina Utilities Commission and the South Carolina Public Service Commission.

Comment date: October 11, 1996, in accordance with Standard Paragraph E at the end of this notice.

4. Louisville Gas and Electric Company

[Docket No. ER96–2904–000]

Take notice that on September 24, 1996, Louisville Gas and Electric Company (LG&E) tendered for filing an amendment in the above-referenced docket.

Comment date: October 11, 1996, in accordance with Standard Paragraph E at the end of this notice.

5. New England Power Pool

[Docket No. ER96–3076–000]

Take notice that on September 23, 1996, the New England Power Pool Executive Committee filed a signature page to the NEPOOL Agreement dated September 1, 1971, as amended, signed by PacifiCorp Power Marketing, Inc. (PacifiCorp). The New England Power Pool Agreement, as amended, has been designated NEPOOL FPC No. 2.

The Executive Committee states that acceptance of this signature page would permit PacifiCorp to join the over 100 Participants already in the Pool. NEPOOL further states that the filed signature page does not change the NEPOOL Agreement in any manner, other than to make PacifiCorp a Participant in the Pool. NEPOOL requests an effective date of November 1, 1996 for commencement of participation in the Pool by PacifiCorp.

Comment date: October 11, 1996, in accordance with Standard Paragraph E at the end of this notice.

6. Union Electric Company

[Docket No. ER96–3077–000]

Take notice that on September 23, 1996, Union Electric Company (UE), tendered for filing a Letter Agreement dated January 18, 1996 under the provisions of the Facility Use Agreement between Illinois Power Company (IP) and UE dated August 9, 1984. UE asserts that the purpose of the Letter Agreement is to modify facilities to allow IP to better serve an existing customer.

Comment date: October 11, 1996, in accordance with Standard Paragraph E at the end of this notice.

7. Central Illinois Public Service

[Docket No. ER96–3078–000]

Take notice that on September 23, 1996, Central Illinois Public Service Company (CIPS), submitted for filing a service agreement, dated August 20, 1996, establishing Industrial Energy Applications (IEA) as a customer under the terms of CIPS' Open Access Transmission Tariff.

CIPS requests an effective date of August 20, 1996 for the service agreement. Accordingly, CIPS requests waiver of the Commission's notice requirements. Copies of this filing were served upon IEA and the Illinois Commerce Commission.

Comment date: October 11, 1996, in accordance with Standard Paragraph E at the end of this notice.

8. Jersey Central Power & Light Company, Metropolitan Edison Company, Pennsylvania Electric Company

[Docket No. ER96–3079–000]

Take notice that on September 24, 1996, GPU Service, Inc. (GPU), on behalf of Jersey Central Power & Light Company, Metropolitan Edison Company and Pennsylvania Electric Company (GPU Energy), filed an executed Service Agreement between GPU and Western Power Services, Inc. (WPS), dated September 16, 1996. This Service Agreement specifies that WPS has agreed to the rates, terms and conditions of GPU Energy's Operating Capacity and/or Energy Sales Tariff (Sales Tariff) designated as FERC Electric Tariff, Original Volume No. 1. The Sales Tariff was accepted by the Commission by letter order issued on February 10, 1995 in *Jersey Central Power & Light Co., Metropolitan Edison Co. and Pennsylvania Electric Co.,* Docket No. ER95–276–000 and allows GPU and WPS to enter into separately scheduled transactions under which GPU Energy will make available for sale, surplus operating capacity and/or energy at negotiated rates that are no higher than GPU Energy's cost of service.

GPU requests a waiver of the Commission's notice requirements for good cause shown and an effective date of September 16, 1996 for the Service Agreement.

GPU has served copies of the filing on regulatory agencies in New Jersey and Pennsylvania.

Comment date: October 11, 1996, in accordance with Standard Paragraph E at the end of this notice.

9. Jersey Central Power & Light Company, Metropolitan Edison Company, Pennsylvania Electric Company

[Docket No. ER96–3080–000]

Take notice that on September 24, 1996, GPU Service, Inc. (GPU), on behalf of Jersey Central Power & Light Company, Metropolitan Edison Company and Pennsylvania Electric Company (GPU Energy), filed an executed Service Agreement between GPU and Energy Transfer Group, L.L.C. (ETG), dated September 23, 1996. This Service Agreement specifies that ETG has agreed to the rates, terms and conditions of GPU Energy's Operating Capacity and/or Energy Sales Tariff (Sales Tariff) designated as FERC Electric Tariff, Original Volume No. 1. The Sales Tariff was accepted by the Commission by letter order issued on February 10, 1996 in *Jersey Central Power & Light Co., and Metropolitan Edison Co. and Pennsylvania Electric Co.,* Docket No. ER95–276–000 and allows GPU and ETG to enter into separately scheduled transactions under which GPU Energy will make available for sale, surplus operating capacity and/or energy at negotiated rates that are no higher than GPU Energy will make available for sale, surplus operating capacity and/or energy at negotiated rates that are no higher than GPU Energy's cost of service.

GPU requests a waiver of the Commission's notice requirements for good cause shown and an effective date of September 23, 1996 for the Service Agreement.

GPU has served copies of the filing on regulatory agencies in New Jersey and Pennsylvania.

Comment date: October 11, 1996, in accordance with Standard Paragraph E at the end of this notice.

10. Duke Power Company

[Docket No. ER96–3081–000]

Take notice that on September 24, 1996, Duke Power Company (Duke), tendered for filing a revised Rate Schedule MR for market-based sales. The revised rate schedule eliminated the language restricting sales of capacity and/or energy to sales for Duke's own generation and transmission resources.

Comment date: October 11, 1996 in accordance with Standard Paragraph E at the end of this notice.

11. Howard Energy Marketing, Inc.

[Docket No. ER96–3082–000]

Take notice that on September 23, 1996, Howard Energy Marketing, Inc. (Howard), filed certain information as required by the Commission's February 24, 1995, letter order in Docket No. ER95–252–000. Copies of Howard's information filing are on file with the Commission.

Comment date: October 11, 1996 in accordance with Standard Paragraph E at the end of this notice.

12. Central Illinois Public Service Company

[Docket No. ER96–3083–000]

Take notice that a September 24, 1996, Central Illinois Public Service Company (CIPS) submitted for filing a service agreement, dated August 27, 1996, establishing El Paso Energy Marketing Company (El Paso) as a customer under the terms of CIPS' Open Access Transmission Tariff.

CIPS requests an effective date of August 27, 1996 for the service agreement. Accordingly, CIPS requests waiver of the Commission's notice requirements. Copies of this filing were served upon El Paso and the Illinois Commerce Commission.

Comment date: October 11, 1996 in accordance with Standard Paragraph E at the end of this notice.

13. Wesley W. von Schack

[Docket No. ID–2978–000]

Take notice that on September 10, 1966, Wesley W. Von Schack (Applicant) tendered for filing an application under Section 305(b) of the Federal Power Act to hold the following positions:

Chairman, President and Chief Executive, New York State Electric & Gas Corporation
Director, Mellon Bank Corporation
Director, Mellon Bank, N.A.

Comment date: October 11, 1996 in accordance with Standard Paragraph E at the end of this notice.

14. East Texas Electric Cooperative, Inc.

[Docket No. OA96–231–000]

Take notice that on September 17, 1996, East Texas Electric Cooperative, Inc. (ETEC) tendered for filing a ''Request for Waiver,'' in accordance with Section 35.28(d) of the Commission's Regulations, 18 CFR § 35.25(d).

ETEC's Request for Waiver states that the ETEC currently does not own transmission facilities, but that it is constructing a transmission system. The first part of its transmission system will go into service on approximately November 15, 1996. ETEC requests a waiver of the Commission's requirement in Order 888 to file an Open Access Transmission Tariff 60 days prior to commencement of transmission in interstate commerce. ETEC commits to file an OAT Tariff on or about November 15, 1996, but no later than the date on which service over ETEC's transmission facilities commences. ETEC also requests a waiver of the requirement to provide ancillary services and of the OASIS and Standards of Conduct requirements in Order No. 889.

Comment date: October 17, 1996 in accordance with Standard Paragraph E at the end of this notice.

15. Ecogen One Partners Ltd.

[Docket No. QF87–615–003 and EL96–75–000]

Take notice that on September 21, 1996, Ecogen One Partners Ltd. (Ecogen) filed with the Commission a report of temporary waiver (for the start-up and testing year) of the efficiency standard for qualifying cogeneration facilities specified in Section 292.205 of the Commission's Rules.

Comment date: October 21, 1996 in accordance with Standard Paragraph E at the end of this notice.

Standard Paragraph

E. Any person desiring to be heard or to protest said filing should file a motion to intervene or protest with the Federal Energy Regulatory Commission, 888 First Street, N.W., Washington, D.C. 20426, in accordance with Rules 211 and 214 of the Commission's Rules of Practice and Procedure (18 CFR 385.211 and 18 CFR 385.214). All such motions or protests should be filed on or before the comment date. Protests will be considered by the Commission in determining the appropriate action to be taken, but will not serve to make protestants parties to the proceeding. Any person wishing to become a party must file a motion to intervene. Copies of this filing are on file with the Commission and are available for public inspection.

Lois D. Cashell,

Secretary.

[FR Doc. 96–25498 Filed 10–3–96; 8:45 am]

BILLING CODE 6717–01–P

[Docket No. ER96–1501–000, et al.]

MidAmerican Energy Company, et al.; Electric Rate and Corporate Regulation Filings

September 26, 1996.

Take notice that the following filings have been made with the Commission:

1. MidAmerican Energy Company

[Docket No. ER96–1501–000]

Take notice that on September 11, 1996, MidAmerican Energy Company

(MidAmerican) tendered for filing a form of Service Agreement in the above-referenced docket. MidAmerican states that the purpose of the Service Agreement is to enable the transactions contemplated by the Firm Power Interchange Service Agreement dated August 21, 1985 between a MidAmerican predecessor and the City of Independence, Missouri (Independence), as amended by the First and Second Amendments thereto, to be conducted pursuant to MidAmerican's market-based power sales tariff, FERC Electric Tariff Original volume No. 5. MidAmerican states that it will file copies of the executed Service Agreement with the Commission when executed by both MidAmerican and Independence.

Comment date: October 9, 1996, in accordance with Standard Paragraph E at the end of this notice.

2. National Power Exchange Corp., Kimball Power Company, Industrial Gas & Electric Services, Peak Energy, Inc., Utility Management and Consulting, Inc., Bonneville Fuels Management Corp.

[Docket Nos. ER94–1593–007; ER95–232–007; ER95–257–007; ER95–379–005; ER96–525–001; ER96–659–002 (not consolidated)]

Take notice that the following informational filings have been made with the Commission and are on file and available for public inspection and copying in the Commission's Public Reference Room:

On September 20, 1996, National Power Exchange Corporation filed certain information as required by the Commission's October 7, 1994, order in Docket No. ER94–1593–000.

On September 6, 1996, Kimball Power Company filed certain information as required by the Commission's February 1, 1995, order in Docket No. ER95–232–000.

On September 20, 1996, Industrial Gas & Electric Services filed certain information as required by the Commission's February 1, 1995, order in Docket No. ER95–257–000.

On September 16, 1996, Peak Energy, Inc. filed certain information as required by the Commission's February 24, 1995, order in Docket No. ER95–379–000.

On September 18, 1996, Utility Management and Consulting, Inc. filed certain information as required by the Commission's January 19, 1996, order in Docket No. ER96–525–000.

On September 5, 1996, Bonneville Fuels Management Corp. filed certain information as required by the Commission's February 8, 1996, order in Docket No. ER96–659–000.

3. UGI Power Supply, Inc.

[Docket No. ER96–2715–000]

Take notice that on September 11, 1996, UGI Power Supply, Inc. tendered for filing an amendment in the above-referenced docket.

Comment date: October 9, 1996, in accordance with Standard Paragraph E at the end of this notice.

4. Northern States Power Company

[Docket No. ER96–2992–000]

Take notice that on September 12, 1996, Northern States Power Company tendered for filing a Transmission Service Agreement with VTEC Energy Inc., effective August 23, 1996.

Comment date: October 9, 1996, in accordance with Standard Paragraph E at the end of this notice.

5. Western Systems Power Pool

[Docket No. ER96–3056–000]

Take notice that on September 19, 1996, Vantus Power Services (Vantus), tendered for filing an application for membership in the Western Systems Power Pool (WSPP) under regulations of the Commission, and requested the Commission to issue an order amending the WSPP Agreement to reflect Vantus' membership, accepting for filing the letter informing Vantus that the WSPP Executive Committee has approved Vantus for membership, waiving the sixty day notice requirement and making such membership effective September 19, 1996, and granting certain other waivers.

Vantus is a wholesale marketer of electric power with authority from the Commission to sell power at market-based rates. *Vantus Energy Corporation,* 73 FERC ¶ 61,099 (1993). Vantus is a wholly-owned subsidiary of Pacific Gas and Electric Company, a public utility. The WSPP is a short term electric power trading market whose implementing agreement has been accepted for filing by the Commission: *Pacific Gas and Electric Company,* 55 FERC ¶ 61,099, *order on reh'g,* 55 FERC ¶ 61,495 (1991). Vantus has applied for, and been accepted for membership in, the WSPP.

Comment date: October 10, 1996, in accordance with Standard Paragraph E at the end of this notice.

6. Cinergy Services, Inc.

[Docket No. ER96–3057–000]

Take notice that on September 20, 1996, Cinergy Services, Inc. (Cinergy), tendered for filing a service agreement under Cinergy's Non-Firm Power Sales Standard Tariff (the Tariff) entered into between Cinergy and Southern Company Services, Inc.

Cinergy and Southern Company Services, Inc. are requesting an effective date of September 16, 1996.

Comment date: October 10, 1996, in accordance with Standard Paragraph E at the end of this notice.

7. Jersey Central Power & Light Company, Metropolitan Edison Company, Pennsylvania Electric Company

[Docket No. ER96–3058–000]

Take notice that on September 20, 1996, GPU Service, Inc. (GPU), on behalf of Jersey Central Power & Light Company, Metropolitan Edison Company and Pennsylvania Electric Company (GPU) Energy), filed an executed Service Agreement between GPU and USGen Power Services, L.P. (USG), dated August 29, 1996. This Service Agreement specifies that USG has agreed to the rates, terms and conditions of GPU Energy's Operating Capacity and/or Energy Sales Tariff (Sales Tariff) designated as FERC Electric Tariff, Original Volume No. 1. The Sales tariff was accepted by the Commission by letter order issued on February 10, 1995 in *Jersey Central Power & Light Co., Metropolitan Edison Co. and Pennsylvania Electric Co.,* Docket No. ER95–276–000 and allows GPU and USG to enter into separately scheduled transactions under which GPU Energy will make available for sale, surplus operating capacity and/or energy at negotiated rates that are no higher than GPU Energy's cost of service.

GPU requests a waiver of the Commission's notice requirements for good cause shown and an effective date of August 29, 1996 for the Service Agreement.

GPU has served copies of the filing on regulatory agencies in New Jersey and Pennsylvania.

Comment date: October 10, 1996, in accordance with Standard Paragraph E at the end of this notice.

8. PECO Energy Company

[Docket No. ER96–3059–000]

Take notice that on September 20, 1996, PECO Energy Company (PECO) filed a Service Agreement dated September 12, 1996 with SCANA Energy Marketing (SCANA) under PECO's FERC Electric Tariff Original Volume No. 5 (Tariff). The Service Agreement adds SCANA as a customer under the Tariff.

PECO requests an effective date of September 12, 1996, for the Service Agreement.

PECO states that copies of this filing have been supplied to SCANA and to

the Pennsylvania Public Utility Commission.

Comment date: October 10, 1996, in accordance with Standard Paragraph E at the end of this notice.

9. Boston Edison Company

[Docket No. ER96–3060–000]

Take notice that on September 20, 1996, Boston Edison Company (Boston Edison), tendered for filing a Service Agreement and Appendix A under Original Volume No. 6, Power Sales and Exchange Tariff (Tariff) for Aquila Power Corporation (Aquila). Boston Edison requests that the Service Agreement become effective as of September 1, 1996.

Edison states that it has served a copy of this filing on Aquila and the Massachusetts Department of Public Utilities.

Comment date: October 10, 1996, in accordance with Standard Paragraph E at the end of this notice.

10. Pennsylvania Power & Light Company

[Docket No. ER96–3061–000]

Take notice that on September 20, 1996, Pennsylvania Power & Light Company (PP&L), filed a Service Agreement dated September 4, 1996, with The Utility-Trade Corporation (UTC) under PP&L's FERC Electric Tariff, Original Volume No. 1. The Service Agreement adds UTC as an eligible customer under the Tariff.

PP&L requests an effective date of September 29, 1996, for the Service Agreement.

PP&L states that copies of this filing have been supplied to UTC and to the Pennsylvania Public Utility Commission.

Comment date: October 10, 1996, in accordance with Standard Paragraph E at the end of this notice.

11. Public Service Electric and Gas Company

[Docket No. ER96–3062–000]

Take notice that on September 20, 1996, Public Service Electric and Gas Company (PSE&G), tendered for filing an agreement to provide non-firm transmission service to AYP Energy, Inc., pursuant to PSE&G's Open Access Transmission Tariff presently on file with the Commission in Docket No. OA96–60–000.

PSE&G further requests waiver of the Commission's Regulations such that the agreement can be made effective as of September 20, 1996.

Comment date: October 10, 1996, in accordance with Standard Paragraph E at the end of this notice.

12. Commonwealth Edison Company

[Docket No. ER96–3063–000]

Take notice that on September 20, 1996, Commonwealth Edison Company (ComEd), submitted for filing an executed Service Agreement, dated August 9, 1996, with Wisconsin Electric Power Company (WEPCO) providing for firm point-to-point transmission service to WEPCO under the terms of ComEd's Open Access Transmission Tariff (OATT).

ComEd requests an effective date of August 12, 1996, for the Service Agreement and, accordingly, seeks waiver of the Commission's notice requirements. Copies of this filing were served upon WEPCO and the Illinois Commerce Commission.

Comment date: October 10, 1996, in accordance with Standard Paragraph E at the end of this notice.

13. EnerZ Corporation

[Docket No. ER96–3064–000]

Take notice that on September 20, 1996, EnerZ Corporation (EnerZ) petitioned the Commission for acceptance of EnerZ Rate Schedule FERC No. 1, the granting of certain blanket approvals, including the authority to sell electricity at market-based rates; and the waiver of certain Commission Regulations. EnerZ is a subsidiary of Zeigler Coal Holding Company, a holding company incorporated in Delaware and headquartered in Fairview Heights, Illinois.

Comment date: October 10, 1996, in accordance with Standard Paragraph E at the end of this notice.

14. Enron Power Marketing, Inc.

[Docket No. ER96–3065–000]

Take notice that on September 20, 1996, Enron Power Marketing, Inc., tendered for filing proposed changes in its FERC Electric Service Tariff Rate Schedule No. 1. The changes consist of restrictions on the sale of power and non-power goods and services between Enron Power Marketing, Inc. and Portland General Electric Company (PGE), based on a proposed merger that would result in these companies being affiliates.

Copies of the filing were served upon Enron Power Marketing, Inc.'s jurisdictional customers and the Oregon Public Utility Commission.

Comment date: October 10, 1996, in accordance with Standard Paragraph E at the end of this notice.

15. Cinergy Services, Inc.

[Docket No. ER96–3066–000]

Take notice that on September 20, 1996, Cinergy Services, Inc. (Cinergy), tendered for filing a service agreement under Cinergy's Non-Firm Power Sales Standard Tariff (the Tariff) entered into between Cinergy and Potomac Electric Power Company.

Cinergy and Potomac Electric Power Company are requesting an effective date of September 1, 1996.

Comment date: October 10, 1996, in accordance with Standard Paragraph E at the end of this notice.

16. Public Services Company of Colorado

[Docket No. ER96–3067–000]

Take notice that on September 20, 1996, Public Service Company of Colorado (Public Service), tendered for filing a revision to Exhibit B of the Power Purchase Agreement between Public Service and Intermountain Rural Electric Association (Intermountain). Specifically Public Service is filing a Revision to Exhibit B of this Contract designated as Public Service Rate Schedule FERC No. 51. This revision adds a Delivery Point of Woodland Park/Divide to Intermountain's Points of Delivery. Public Service requests that this filing be made effective as of May 15, 1996.

Comment date: October 10, 1996, in accordance with Paragraph E at the end of this notice.

17. CNG Energy Services Corporation

[Docket No. ER96–3068–000]

Take notice that on September 20, 1996, CNG Energy Services Corporation (CNGESC), petitioned the Commission for acceptance of CNGESC's Rate Schedule FERC No. 1; the granting of certain blanket approvals, including the authority to sell electricity at market-based rates; and the waiver of certain Commission Regulations.

Comment date: October 10, 1996, in accordance with Standard Paragraph E at the end of this notice.

18. Louisville Gas and Electric Company

[Docket No. ER96–3072–000]

Take notice that on September 20, 1996, Louisville Gas and Electric Company, tendered for filing copies of services agreements between Louisville Gas and Electricity Company and PanEnergy Power Services under Rate GSS.

Comment date: October 10, 1996, in accordance with Standard Paragraph E at the end of this notice.

19. South Carolina Electric & Gas Company

[Docket No. ER96–3073–000]

Take notice that on September 23, 1996, South Carolina Electric & Gas Company (SCE&G), submitted service agreements establishing Carolina Power & Light Company (CP&L), and LG&E Power Marketing, Inc. (LG&E) as customers under the terms of SCE&G's Negotiated Market Sales Tariff.

SCE&G requests an effective date of one day subsequent to this filing for the service agreements. Accordingly, SCE&G requests waiver of the Commission's notice requirements. Copies of this filing were served upon CP&L, LG&E, and the South Carolina Public Service Commission.

Comment date: October 10, 1996, in accordance with Standard Paragraph E at the end of this notice.

20. Cinergy Services, Inc.

[Docket No. ER96–3074–000]

Take notice that on September 23, 1996, Cinergy Services, Inc. (Cinergy), tendered for filing a service agreement under Cinergy's Open Access Transmission Service Tariff (the Tariff) entered into between Cinergy and El Paso Energy Marketing Company.

Comment date: October 10, 1996, in accordance with Standard Paragraph E at the end of this notice.

21. PacifiCorp

[Docket No. ER96–3075–000]

Take notice that on September 23, 1996, PacifiCorp, tendered for filing in accordance with 18 CFR Part 35 of the Commission's Rules and Regulations, various Service Agreements with customers under, PacifiCorp's FERC Electric Tariff, Second Revised Volume No. 3, Service Schedule PPL–3.

Copies of this filing were supplied on the Washington Utilities and Transportation Commission and the Public Utility Commission of Oregon.

A copy of this filing may be obtained from PacifiCorp's Regulatory Administration Department's Bulletin Board System through a personal computer by calling (503) 464–6122 (9600 baud, 8 bits, no parity, 1 stop bit).

Comment date: October 10, 1996, in accordance with Standard Paragraph E at the end of this notice.

Standard Paragraph

E. Any person desiring to be heard or to protest said filing should file a motion to intervene or protest with the Federal Energy Regulatory Commission, 888 First Street, N.E., Washington, D.C. 20426, in accordance with Rules 211 and 214 of the Commission's Rules of Practice and Procedure (18 CFR 385.211 and 18 CFR 385.214). All such motions or protests should be filed on or before the comment date. Protests will be considered by the Commission in determining the appropriate action to be taken, but will not serve to make protestants parties to the proceeding. Any person wishing to become a party must file a motion to intervene. Copies of this filing are on file with the Commission and are available for public inspection.

Lois D. Cashell,

Secretary.

[FR Doc. 96–25496 Filed 10–3–96; 8:45 am]

BILLING CODE 6717–01–M

[Docket No. ER96–3084–000, et al.]

Virginia Electric and Power Company, et al.; Electric Rate and Corporate Regulation Filings

September 30, 1996.

Take notice that the following filings have been made with the Commission:

1. Virginia Electric and Power Company

[Docket No. ER96–3084–000]

Take notice that on September 25, 1996, Virginia Electric and Power Company (Virginia Power), tendered for filing a Service Agreement for Non-Firm Point-to-Point Transmission Service between Duke Power Company (Duke) and Virginia Power under the Open Access Transmission Tariff to Eligible Purchasers dated July 9, 1996. Under the tendered Service Agreement Virginia Power will provide non-firm point-to-point service to Duke as agreed to by the parties under the rates, terms and conditions of the Open Access Transmission Tariff.

Copies of the filing were served upon the Virginia State Corporation Commission, the North Carolina Utilities Commission and the South Carolina Public Service Commission.

Comment date: October 15, 1996, in accordance with Standard Paragraph E at the end of this notice.

2. Virginia Electric and Power Company

[Docket No. ER96–3085–000]

Take notice that on September 25, 1996, Virginia Electric and Power Company (Virginia Power), tendered for filing a Service Agreement for Non-Firm Point-to-Point Transmission Service between Rainbow Energy Marketing Corporation and Virginia Power under the Open Access Transmission Tariff to Eligible Purchasers dated July 9, 1996. Under the tendered Service Agreement Virginia Power will provide non-firm point-to-point service to Rainbow Energy as agreed to by the parties under the rates, terms and conditions of the Open Access Transmission Tariff.

Copies of the filing were served upon the Virginia State Corporation Commission and the North Carolina Utilities Commission.

Comment date: October 15, 1996, in accordance with Standard Paragraph E at the end of this notice.

3. Northeast Utilities Service Company

[Docket No. ER96–3087–000]

Take notice that on September 25, 1996, Northeast Utilities Service Company (NUSCO), tendered for filing a Service Agreement to provide Non-Firm Point-to-Point Transmission Service to Coastal Electric Services Company under the NU System Companies' Open Access Transmission Service Tariff No. 8.

NUSCO states that a copy of this filing has been mailed to Coastal Electric Services Company.

NUSCO requests that the Service Agreement become effective sixty (60) days after the date of filing.

Comment date: October 15, 1996, in accordance with Standard Paragraph E at the end of this notice.

4. Northeast Utilities Service Company

[Docket No. ER96–3088–000]

Take notice that on September 25, 1996, Northeast Utilities Service Company (NUSCO), tendered for filing a Service Agreement to provide Non-Firm Point-to-Point Transmission Service to KCS Power Marketing, Inc. under the NU System Companies' Open Access Transmission Service Tariff No. 8.

NUSCO states that a copy of this filing has been mailed to KCS Power Marketing, Inc.

NUSCO requests that the Service Agreement become effective sixty (60) days from the date of the filing.

Comment date: October 15, 1996, in accordance with Standard Paragraph E at the end of this notice.

5. Great Bay Power Corporation

[Docket No. ER96–3089–000]

Take notice that on September 25, 1996, Great Bay Power Corporation (Great Bay), tendered for filing a service agreement between Braintree Electric Light Department and Great Bay for service under Great Bay's revised Tariff for Short Term Sales. Great Bay's revised Tariff for Short Term Sales was accepted for filing by the Commission on May 17, 1996, in Docket No. ER96–726–000. The service agreement is

proposed to be effective September 3, 1996.

Comment date: October 15, 1996, in accordance with Standard Paragraph E at the end of this notice.

6. ONEOK Power Marketing Company

[Docket No. ER96–3090–000]

Take notice that on September 25, 1996, ONEOK Power Marketing Company (OPMC) petitioned the Commission for (1) blanket authorization to sell electricity at market-based rates; (2) a disclaimer of jurisdiction over OPMC's power brokering activities; (3) acceptance of OPMC's Rate Schedule FERC No. 1; (4) waiver of certain Commission Regulations; and (5) such other waivers and authorizations as have been granted to other power marketers, all as more fully set forth in OPMC's petition on file with the Commission.

OPMC states that it intends to engage in electric power transactions as a broker and as a marketer. In transactions where OPMC acts as a marketer, it proposes to make such sales on rates, terms and conditions to be mutually agreed to with purchasing parties.

Comment date: October 15, 1996, in accordance with Standard Paragraph E at the end of this notice.

7. American Energy Service Corp.

[Docket No. ER96–3091–000]

Take notice that on September 25, 1996, American Energy Service Corp. (AESC), tendered for filing pursuant to Part 35 of the Regulations under the Federal Power Act, 18 CFR Part 35, and Rules 204 and 205, of the Commission's Rules of Practice and Procedure, 18 CFR 385.204 and 385.205, a petition for waivers and blanket approvals of the Commission and for an order accepting its Electric Rate Schedule No. 1.

AESC intends to engage in electric power transactions as a marketer and a broker. In transactions where AESC sells electric power it proposes to make such sales on rates, terms, and conditions to be mutually agreed to with the purchasing party. AESC is an affiliate of Indianapolis Power & Light.

Comment date: October 15, 1996, in accordance with Standard Paragraph E at the end of this notice.

8. United American Energy Corp.

[Docket No. ER96–3092–000]

Take notice that on September 25, 1996, United American Energy Corp. (UAE), tendered for filing pursuant to §§ 205 and 207 of the Commission's Rules of Practice and Procedure, a petition for waivers and blanket approvals under various regulations of the Commission and for an order accepting its FERC Electric Rate Schedule No. 1 to be effective September 25, 1996.

UAE intends to engage in electric power and energy transactions as a marketer and a broker. In transactions where UAE sells electric energy it proposes to make such sales on rates, terms and conditions to be mutually agreed to with the purchasing party.

Comment date: October 15, 1996, in accordance with Standard Paragraph E at the end of this notice.

Standard Paragraph

E. Any person desiring to be heard or to protest said filing should file a motion to intervene or protest with the Federal Energy Regulatory Commission, 888 First Street, N.E., Washington, D.C. 20426, in accordance with Rules 211 and 214 of the Commission's Rules of Practice and Procedure (18 CFR 385.211 and 18 CFR 385.214). All such motions or protests should be filed on or before the comment date. Protests will be considered by the Commission in determining the appropriate action to be taken, but will not serve to make protestants parties to the proceeding. Any person wishing to become a party must file a motion to intervene. Copies of this filing are on file with the Commission and are available for public inspection.

Lois D. Cashell,

Secretary.

[FR Doc. 96–25497 Filed 10–3–96; 8:45 am]

BILLING CODE 6717–01–P

[Project No. 11475–000]

Central Vermont Public Service Corp.; Notice of Availability of Draft Environmental Assessment

September 30, 1996.

In accordance with the National Environmental Policy Act of 1969 and the Federal Energy Regulatory Commission's (Commission's) regulations, 18 CFR Part 380 (Order No. 486, 52 FR 47897), the Office of Hydropower Licensing has reviewed the application for an original license for the Carver Falls Hydroelectric Project located on the Poultney River in Washington County, New York, and Rutland County, Vermont, and has prepared a Draft Environmental Assessment (DEA) for the project. In the DEA, the Commission's staff has analyzed the potential environmental impacts of the existing, unlicensed project and has concluded that approval of the project, with appropriate environmental protection or enhancement measures, would not constitute a major federal action significantly affecting the quality of the human environment.

Copies of the DEA are available for review in the Public Reference and Files Maintenance Branch of the Commission's offices at 888 First Street, NE., Washington, D.C. 20426.

Any comments should be filed within 45 days from the date of this notice and should be addressed to Lois D. Cashell, Secretary, Federal Energy Regulatory Commission, 888 First Street, NE., Washington, D.C. 20426. Please affix ''Carver Falls Hydroelectric Project, No. 11475–000'' to all comments. For further information, please contact Jim Haimes at (202) 219–2780.

Lois D. Cashell,

Secretary.

[FR Doc. 96–25455 Filed 10–3–96; 8:45 am]

BILLING CODE 6717–01–M

Notice of Amendment of License

September 30, 1996.

Take notice that the following hydroelectric application has been filed with the Commission and is available for public inspection:

a. *Type of Application:* Amendment of License.

b. *Project No.:* 2652–004.

c. *Date Filed:* August 1, 1996.

d. *Applicant:* PacifiCorp.

e. *Name of Project:* Bigfork.

f. *Location:* On the Swan River in Flathead County, Montana.

g. *Filed Pursuant to:* Federal Power Act, 16 U.S.C. 791(a)–825(r).

h. *Applicant Contact:* S.A. deSousa, Director, Hydropower Resources, PacifiCorp, Public Service Building, Suite 610, 920 S.W. Sixth Avenue, Portland, OR 97204, (503) 464–5343; Thomas H. Nelson, 1001 S.W. Fifth Avenue, Suite 1900, Portland, OR 97204–1135, (503) 227–8450.

i. *FERC Contact:* Regina Saizan, (202) 219–2673.

j. *Comment Date:* November 4, 1996.

k. *Description of the Request:* The licensee requests an extension of the termination date of the license from August 31, 2001 to August 31, 2002. The license for the Bigfork Project expires August 31, 2001. Under the Commission's relicensing regulations, the licensee is to commence relicensing activities by August 31, 1996. On June 3, 1996, the licensee filed a request for the Commission to determine jurisdiction. The jurisdiction determination is currently under review under a separate proceeding.

l. This notice also consists of the following standard paragraphs: B, C1, and D2.

B. Comments, Protests, or Motions to Intervene—Anyone may submit comments, a protest, or a motion to intervene in accordance with the requirements of the Rules of Practice and Procedure, 18 CFR 385.210, 385.211, 385.214. In determining the appropriate action to take, the Commission will consider all protests or other comments filed, but only those who file a motion to intervene in accordance with the Commission's Rules may become a party to the proceeding. Any comments, protests, or motions to intervene must be received on or before the specified comment date for the particular application.

C1. Filing and Service of Responsive Documents—Any filings must bear in all capital letters the title ''COMMENTS'', ''RECOMMENDATIONS FOR TERMS AND CONDITIONS'', ''PROTEST'', or ''MOTION TO INTERVENE'', as applicable, and the Project Number of the particular application to which the filing refers. Any of the above-named documents must be filed by providing the original and the number of copies provided by the Commission's regulations to: The Secretary, Federal Energy Regulatory Commission, 888 First Street, NE., Washington, DC 20426. A copy of any motion to intervene must also be served upon each representative of the Applicant specified in the particular application.

D2. Agency Comments—Federal, state, and local agencies are invited to file comments on the described application. A copy of the application may be obtained by agencies directly from the Applicant. If an agency does not file comments within the time specified for filing comments, it will be presumed to have no comments. One copy of an agency's comments must also be sent to the Applicant's representatives.

Lois D. Cashell,

Secretary.

[FR Doc. 96–25456 Filed 10–3–96; 8:45 am]

BILLING CODE 6717–01–M

ENVIRONMENTAL PROTECTION AGENCY

[ER–FRL–5473–7]

Environmental Impact Statements and Regulations; Availability of EPA Comments

Availability of EPA comments prepared September 16, 1996 through September 20, 1996 pursuant to the Environmental Review Process (ERP), under Section 309 of the Clean Air Act and Section 102(2)(c) of the National Environmental Policy Act as amended. Requests for copies of EPA comments can be directed to the Office of Federal Activities at (202) 564–7167. An explanation of the ratings assigned to draft environmental impact statements (EISs) was published in FR dated April 05, 1996 (61 FR 15251).

Draft EISs

ERP No. D–AFS–L61207–AK Rating EC2, Upper Carroll Timber Sale, Implementation, Tongass National Forest, Ketchikan Administrative Area, Ketchikan Ranger District, Revillagigedo Island, AK.

Summary: EPA expressed environmental concerns based on potential impacts to water quality and the marine environment from timber harvest and road building activities on Revillagigedo Island, AK.

ERP No. D–AFS–L65263–ID, Targhee National Forest, Implementation, Forest Plan Revisions, Bonneville, Butte, Clark, Fremont, Jefferson, Lemhi, Madison and Teton Counties, ID.

Summary: Our abbreviated review has revealed no EPA concerns with this project.

ERP No. D–BLM–K67036–NV Rating EO2, Mule Canyon Surface Gold Mine Development, Operation and Reclamation and Associate Facilities, Plan of Operation Approval, Battle Mountain District, Lander and Eureka Counties, NV.

Summary: EPA expressed environmental objection to the proposed project based on its potential to adversely affect surface and groundwater. We requested additional information in the final EIS regarding the impacts of transporting ore to Twin Creeks Mine for milling; the result of the ecological risk assessment; the selection of options for pit backfilling and waste rock pile design; design parameters for several mining and processing facilities; impacts to wildlife and springs; and mitigation measures.

ERP No. D–CGD–A39137–00 Rating LO, Atlantic Protected Living Marine Resource Initiative, Implementation, Atlantic Ocean, from Maine to Florida.

Summary: EPA lacks objection to the proposed action as described in the draft EIS.

ERP No. D–COE–C36073–NJ Rating EC2, Absecon Island Interim Feasibility Study, Storm Damage Reduction, Brigantic Inlet to Great Egg Harbor Inlet, Atlantic County, NJ.

Summary: EPA raised environmental concerns about impacts to benthic communities and water quality, and potential cumulative impacts associated with this and other erosion/storm damage protection projects in New Jersey. Additional information is requested in the final EIS to address these issues.

ERP No. D–FHW–H40155–MO Rating EC2, MO–13 and MO–7 Highway/Freeway Improvements, MO–13 from US 24 in Lexington to Truman Reservoir south of Clinton and MO–7 in the immediate area of Clinton, Funding, Lafayette, Johnson and Henry Counties, MO.

Summary: EPA expressed environmental concerns about increased noise levels at adjacent public facilities, inadequate provisions for avoiding or mitigating wetlands impacts, and the absence of an evaluation of cumulative, secondary, and indirect effects on the social and environmental attributes of the project corridor.

ERP No. D–FHW–H40158–MO Rating EC2, U.S. 65 Corridor Construction, Carollton to Marshall, Funding, COE Section 404 Permit and U.S. Coast Guard Permit, Carroll, Lafeyette and Saline Counties, MO.

Summary: EPA expressed environmental concerns regarding wetland and noise impacts and secondary/cumulative impacts. EPA requested that these issues be more fully addressed in the final EIS.

ERP No. D–FHW–H40159–MO Rating EC2, MO–21 Corridor Transportation Improvement, between Otto to DeSoto, Funding, COE Section 404 Permit and NPDES Permit, Jefferson County, MO.

Summary: EPA expressed environmental concerns regarding wetlands loss and the absence of a regional emissions analysis necessary to assess project air quality impacts in the St. Louis non-attainment area.

ERP No. D–FRC–L05217–WA Rating EO1, Upriver FERC No. 3074 Hydroelectric Project, Amendment of the Existing License, Spokane River, Spokane County, WA.

Summary: EPA raised environmental objections regarding the proposed action's impacts on water quality and associated impacts on fish and other aquatic life in the Spokane River.

ERP No. D–NPS–H65005–NB Rating LO, Niobrara National Scenic River, General Management Plan, Niobrara/Missouri National Scenic Riverways, Implementation, Brown, Cherry, Keya Paha and Rock Counties, NB.

Summary: EPA expressed no objections to the preferred management alternative, and no objections to any of the three National Scenic River boundary alternatives. EPA suggested that Boundary Alternative #2 would, when coupled with the preferred management alternative, provide the

greatest protection for the resources of the Niobrara Scenic River System.

ERP No. D–NPS–L65264–WA Rating LO, Elwha River Ecosystem Restoration Implemention Project, Olympic National Park, Clallam County, WA.

Summary: EPA expressed lack of objections for the removal of both the Glines Canyon and Elwha Dams.

ERP No. D–SFW–L99006–WA Rating EC2, Washington State Department of Natural Resources (WDNR) Habitat Conservation Plan (HCP), Issuance of a Permit for Incidental Take of Federally-Listed Species and Implementation of the Multi-Species Plan for Lands Managed by WDNR, WA.

Summary: EPA expressed environmental concern regarding aquatic/terrestrial ecosystem protection and restoration, hydrologic maturity models and protection of intermittent and ephemeral streams. EPA requested that these issues be addressed in the final document.

ERP No. DR–USA–A21035–OR Rating EC2, Umatilla Depot Activity, Revisions to Disposal of Chemical Agents and Munitions Stored, Construction and Operation, Morrow and Umatilla Counties, OR.

Summary: EPA expressed environmental concerns regarding exposure pathways; meterorolgical data and emergency planning. EPA requested that these issues be further discussed in the final document.

ERP No. DS–FHW–H40136–KS Rating EO2, South Lawrence Trafficway Construction, Kansas Turnpike I–70 to KS–10/Noria Road, New Information concerning KS–10 on the East and US 59 on the West, Funding, COE Section 404 Permit and Right-of-Way Acquisition, Douglass County, KS.

Summary: EPA expressed objections to all three alternative alignments evaluated in the supplemental EIS, based on substantial, and largely unmitigatible, impacts to wetland areas and the associated impacts to the spiritual practices of students at the Haskell Indian Nations University located adjacent to the project.

Final EISs

ERP No. F–AFS–J35009–UT, Upper Provo River Reservoirs Stabilization Project, Implementation, Wasatch-Cache National Forest, Kamas Ranger District, Summit County, UT.

Summary: EPA's original concerns have been satisfactorily addressed.

ERP No. F–AFS–K99025–CA, Pacific Pipeline Transportation Project, Construction/Operation, Right-of-Way Grant, Special-Use-Permit and COE Section 10 and 404 Permits, Angeles National Forest, Santa Barbara, Ventura, Los Angeles and Kern Counties, CA.

Summary: EPA expressed environmental concerns regarding the potential biases of statistical methodology and assumptions used in the FEIS to evaluate disproportionate impacts to minority/lower-income communities. EPA recommended that the USFS, CPUC, and applicant work very closely with local communities to refine and develop the proposed EJ mitigation measures.

ERP No. F–COE–K01074–CA, Morrison Creek Mining Reach Upstream North of Jackson Highway, Implementation, Community Plan Amendment, Rezoning, Use Permit Amendment to Existing Use Permit and COE Section 404 Permit, Sacramento County, CA.

Summary: EPA remains concerned over the potential channelization of Morrison Creek and requested that the Corps work with EPA and the applicant to explore opportunities to avoid or minimize impacts to Morrison Creek. In addition, EPA continued to be concerned over the cumulative impacts associated with the proposed action.

ERP No. F–FDA–C81016–NY, U.S. Food and Drug Administration, Construction of Regional Office and Laboratory, Site Specific, Jamaica Site, Queen County, NY.

Summary: EPA believed that the proposed project will not result in significant adverse environmental impacts; therefore, EPA had no objections to its implementation.

ERP No. F–FHW–K53007–CA, Alameda Railroad Corridor Consolidated Project, Construction from Downtown Los Angeles to the Badger Avenue Bridge/CA–91, Funding, COE Section 404 Permit and ICC Approval, Los Angeles County, CA.

Summary: EPA asked that the Record of Decision provide additional information and/or mitigation commitments on construction-related particulate emissions, the worst-case emergency response plan, polychlorinated biphenyls, pollution prevention features, and impacts to the City of Compton.

ERP No. FS–COE–K36100–CA, American River Watershed Flood Plain Protection Project, Construction, Operation and Maintenance, Updated and Additional Information, Sacramento, Placer and Sutter Counties, CA.

Summary: EPA concluded that the Detention Dam alternative would have unacceptable, unmitigable effects on unique natural resources on the North and Middle forks of the American River, and urged the Corps not to pursue the Detention Dam alternative. EPA recommended that (1) certain non-dam measures should be funded and implemented as soon as possible; (2) variable reoperation of Folsom Reservoir should be continued to provide a minimum 100-year flood protection until all elements of the long-term flood control strategy are completed; (3) that the Section 404(b)(1) Guidelines evaluation be revisited and more clearly provide the basis for its conclusions; (4) the Corps continue its outreach effort to develop the best implementation approaches to levee improvements for the Natomas area along the east levee of the Sacramento River; (5) the consensus-based Lower American River Task Force effort be continued; and (6) the Task Force recommendations for stream bank protection and levee improvements be implemented.

Dated: October 1, 1996.

William D. Dickerson,

Director, NEPA Compliance Division Office of Federal Activities.

[FR Doc. 96–25522 Filed 10–3–96; 8:45 am]

BILLING CODE 6560–50–U

[ER–FRL–5473–6]

Environmental Impact Statements; Notice of Availability

Responsible Agency: Office of Federal Activities, General Information (202) 564–7167 OR (202) 564–7153. Weekly receipt of Environmental Impact Statements Filed September 23, 1996 Through September 27, 1996 Pursuant to 40 CFR 1506.9.

EIS No. 960445, DRAFT SUPPLEMENT, AFS, CO, Illinois Creek Timber Sale, Timber Harvesting, Implementation, Updated Information, Grand Mesa, Uncompahgre and Gunnison National Forests Land and Resource Management Plan Amendment, Taylor River/Cebolla Ranger District, Gunnison County, CO, Due: November 18, 1996, Contact: Arthur Haines (970) 641–0471.

EIS No. 960446, FINAL EIS, COE, NJ, Absecon Island Interim Feasibility Study, Storm Damage Reduction, Brigantic Inlet to Great Egg Harbor Inlet, Atlantic County, NJ, Due: November 04, 1996, Contact: Beth Brandreth (215) 656–6555.

EIS No. 960447, FINAL EIS, IBR, NV, Southern Nevada Water Authority Treatment and Transmission Facility, Construction and Operation, Issuance of Permits, Right-of-Way Grants and Modification of existing Water Delivery/Service Contracts, Clark County, NV, Due: November 04, 1996, Contact: James Green (702) 293–8519.

EIS No. 960448, FINAL EIS, AFS, CO, Fraser Valley Loop Transmission Line Project, Construction, Operation, Associated Operations and Maintenance Activities, Approval of Permits, Arapaho and Roosevelt National Forests, Grand County, CO, Due: November 04, 1996, Contact: George Edwards (970) 887–4100.

EIS No. 960449, LEGISLATIVE FINAL EIS, AFS, MT, Lolo National Wild and Scenic Rivers, Suitability Study for Eight Rivers for Inclusion in the National Wild and Scenic River System, Lolo National Forest, Lewis & Clark, Missoula, Powell, Ravalli and Sanders Counties, MT, Due: November 04, 1996, Contact: Suzanne Artley (406) 329–3776.

EIS No. 960450, FINAL EIS, SFW, NV, Lahontan Valley Wetlands Water Rights Acquisition Program, Implementation, Churchill County, NV, Due: November 04, 1996, Contact: Ronald M. Anglin (703) 432–5128.

EIS No. 960451, FINAL EIS, FRC, WA, Snoqualmie Falls Hydroelectric Project, (FERC. Project NO.2493), Relicensing, Snoqualmie River, King County, WA, Due: November 04, 1996, Contact: John McEachern (202) 219–3056.

EIS No. 960452, FINAL EIS, FRC, WA, Priest Rapids Project (FERC No. 2114–024), Evaluation of Downstream Fish Passage Facilities, New License Issuance with Conditions to Protect the Migratory Juvenile Salmon (Smolts), Columbia River Basin, Grant County, WA, Due: November 04, 1996, Contact: Timothy J. Welch (202) 219–2666.

EIS No. 960453, DRAFT EIS, DOE, NV, AZ, NM, Navajo Transmission Project (NTP), Construction, Operation and Maintenance, Right-of-Way Grants, EPA NPDES, COE, FAA, FWS and FHW Permits Issuance, NV, NM and AZ, Due: December 02, 1996, Contact: Anthony G. Morton (801) 524–5636.

EIS No. 960454, FINAL EIS, NPS, AK, Brooks River Area Development, Use and Management Plan, Implementation, Katmai National Park, AK, Due: November 04, 1996, Contact: William Pierce (907) 246–3305.

EIS No. 960455, FINAL EIS, FHW, PA, PA–26 Transportation (College Avenue) Improvements between State College and Pleasant Gap Project, PA–26 Highway Improvement, US 322 (Mount Nittany Expressway) to the Bellefonte Bypass (PA–26), Funding and COE Section 404 Permit Issuance, Centre County, PA, Due: November 05, 1996, Contact: Manuel A. Marks (717) 782–3461.

EIS No. 960456, FINAL EIS, COE, FL, Programmatic EIS—Florida's Everglades, Stormwater Treatment Areas Construction Project, NPDES and COE Section 404 Permits, Implementation, Lake Okeechobee, Palm Beach and Hendry Counties, FL, Due: November 04, 1996, Contact: William Porter (904) 423–2259.

EIS No. 960457, FINAL EIS, AFS, OR, Eagle Creek Timber Sale and Road Construction, Implementation, Mt. Hood National Forest, Zigzag and Estacada Ranger Districts, Clackamas County, OR, Due: November 04, 1996, Contact: Janet Anderson (503) 630–6861.

EIS No. 960458, DRAFT EIS, AFS, CO, Aspen Highlands Ski Area Expansion, Master Development Plan Amendment, COE 404 Permit and Special-Use-Permit, White River National Forest, Aspen Ranger District, Pitkin County, CO, Due: November 20, 1996, Contact: Arthur Bauer (970) 544–0082.

EIS No. 960459, DRAFT EIS, FAA, MO, Lambert-St. Louis International Airport (Lambert) Improvements, Construction and Operation, Airport Layout Plan Approval and Funding, City of St. Louis, St. Louis County, MO, Due: November 18, 1996, Contact: Ms. Moira Keane (816) 426–4731.

Amended Notices

EIS No. 960361, DRAFT EIS, FHW, WI, US 12 Corridor Project, Improvement from IH–90/94 at Lake Delton south to Ski Hi Road, Funding and COE Section 404 Permits, Sauk County, WI, Due: January 31, 1997, Contact: Richard Madrzak (608) 829–7500.

Published FR 08–09–96—Review Period extended.

Dated: October 1, 1996.

William D. Dickerson,

Director, NEPA Compliance Division, Office of Federal Activities.

[FR Doc. 96–25523 Filed 10–3–96; 8:45 am]

BILLING CODE 6560–50–U

FEDERAL COMMUNICATIONS COMMISSION

Notice of Public Information Collections Being Reviewed by FCC for Extension Under Delegated Authority, 5 CFR 1320 Authority; Comments Requested

September 30, 1996.

SUMMARY: The Federal Communications Commission, as part of its continuing effort to reduce paperwork burden invites the general public and other Federal agencies to take this opportunity to comment on the following proposed and/or continuing information collections, as required by the Paperwork Reduction Act of 1995, Public Law 104–13. An agency may not conduct or sponsor a collection of information unless it displays a currently valid control number. No person shall be subject to any penalty for failing to comply with a collection of information subject to the Paperwork Reduction Act (PRA) that does not display a valid control number. Comments are requested concerning (a) whether the proposed collection of information is necessary for the proper performance of the functions of the Commission, including whether the information shall have practical utility; (b) the accuracy of the Commissions burden estimates; (c) ways to enhance the quality, utility, and clarity of the information collected and (d) ways to minimize the burden of the collection of information on the respondents, including the use of automated collection techniques or other forms of information technology.

The FCC is reviewing the following information collection requirements for possible 3-year extension under delegated authority 5 CFR 1320, authority delegated to the Commission by the Office of Management and Budget (OMB).

DATES: Written comments should be submitted on or before December 3, 1996. If you anticipate that you will be submitting comments, but find it difficult to do so within the period of time allowed by this notice, you should advise the contact listed below as soon as possible.

ADDRESSES: Direct all comments to Dorothy Conway, Federal Communications Commission, Room 234, 1919 M St., NW., Washington, DC 20554 or via internet to dconway@fcc.gov.

FOR FURTHER INFORMATION CONTACT: For additional information or copies of the information collections contact Dorothy Conway at 202–418–0217 or via internet at dconway@fcc.gov.

SUPPLEMENTARY INFORMATION:

OMB Approval Number: 3060–0581.

Title: 47 CFR 76.503 National subscriber limits.

Type of Review: Extension of existing collection.

Respondents: Business or other for-profit.

Number of Respondents: 25.

Estimated Time Per Response: 1 hour.

Total Annual Burden: 25 hours.

Cost to Respondents: $25. ($1 per respondent for stationery and postage expenses).

Needs and Uses: 47 CFR 76.503 requires cable operators reaching 20%

or more of cable homes passed to certify to the Commission prior to the acquisition of an additional cable system that such acquisition will not result in a violation of horizontal ownership limits. The data will be used by Commission as a means of staying informed of major acquisitions of cable systems and being knowledgeable of horizontal ownership issues in the cable industry.

Federal Communications Commission.

LaVera F. Marshall,

Acting Secretary.

[FR Doc. 96–25492 Filed 10–3–96; 8:45 am]

BILLING CODE 6712–01–P

Notice of Public Information Collections Being Reviewed by the Federal Communications Commission

September 30, 1996.

SUMMARY: The Federal Communications Commission, as part of its continuing effort to reduce paperwork burden invites the general public and other Federal agencies to take this opportunity to comment on the following information collection, as required by the Paperwork Reduction Act of 1995, Public Law 104–13. An agency may not conduct or sponsor a collection of information unless it displays a currently valid control number. No person shall be subject to any penalty for failing to comply with a collection of information subject to the Paperwork Reduction Act (PRA) that does not display a valid control number. Comments are requested concerning (a) whether the proposed collection of information is necessary for the proper performance of the functions of the Commission, including whether the information shall have practical utility; (b) the accuracy of the Commission's burden estimate; (c) ways to enhance the quality, utility, and clarify of the information collected; and (d) ways to minimize the burden of the collection of information on the respondents, including the use of automated collection techniques or other forms of information technology.

DATES: Persons wishing to comment on this information collection should submit comments December 3, 1996.

ADDRESSES: Direct all comments to Dorothy Conway, Federal Communications Commission, Room 234, 1919 M St., N.W., Washington, DC 20554 or via internet to dconway@fcc.gov.

FOR FURTHER INFORMATION CONTACT: For additional information or copies of the information collections contact Dorothy Conway at 202–418–0217 or via internet at dconway@fcc.gov.

SUPPLEMENTARY INFORMATION:

OMB Approval Number: 3060–0080.

Title: Application for FM Translator or FM Booster Station License.

Form No.: FCC 350.

Type of Review: Revision to an existing collection.

Respondents: Business or other for-profit.

Number of Respondents: 250.

Estimated time per response: 3.5 hours.

Total Annual Burden: 875 hours.

Needs and Uses: Licensees and permittees of FM Translator or FM Booster stations are required to file FCC Form 350 to obtain a new or modified station license. This form will be revised to add the new requirements regarding antenna tower registration. This unique antenna registration number identifies an antenna structure and must be used on all filings related to the antenna structure. Several questions will be added to the engineering portion of the FCC 350 to collect this information. This requirement was approved by OMB under control number 3060–0714. The data is used by FCC staff to confirm that the station has been built to terms specified in the outstanding construction permit. Data is then extracted from FCC 350 for inclusion in the subsequent license to operate the station.

Federal Communications Commission.

LaVera F. Marshall,

Acting Secretary.

[FR Doc. 96–25493 Filed 10–3–96; 8:45 am]

BILLING CODE 6712–01–P

Notice of Public Information Collections Submitted to OMB for Review and Approval

September 30, 1996.

SUMMARY: The Federal Communications Commission, as part of its continuing effort to reduce paperwork burden invites the general public and other Federal agencies to take this opportunity to comment on the following proposed and/or continuing information collections, as required by the Paperwork Reduction Act of 1995, Public Law 104–13. An agency may not conduct or sponsor a collection of information unless it displays a currently valid control number. No person shall be subject to any penalty for failing to comply with a collection of information subject to the Paperwork Reduction Act (PRA) that does not display a valid control number. Comments are requested concerning (a) whether the proposed collection of information is necessary for the proper performance of the functions of the Commission, including whether the information shall have practical utility; (b) the accuracy of the Commission's burden estimates; (c) ways to enhance the quality, utility, and clarity of the information collected; and (d) ways to minimize the burden of the collection of information on the respondents, including the use of automated collection techniques or other forms of information technology.

DATES: Written comments should be submitted on or before November 4, 1996. If you anticipate that you will be submitting comments, but find it difficult to do so within the period of time allowed by this notice, you should advise the contact listed below as soon as possible.

ADDRESSES: Direct all comments to Dorothy Conway, Federal Communications Commission, Room 234, 1919 M St., N.W., Washington, DC 20554 or via Internet to dconway@fcc.gov. and Timothy Fain, OMB Desk Officer, 10236 NEOB, 725 17th Street, N.W., Washington, DC 20503 or fain__t@a1.eop.gov.

FOR FURTHER INFORMATION CONTACT: For additional information or copies of the information collections contact Dorothy Conway at 202–418–0217 or via Internet at dconway@fcc.gov.

SUPPLEMENTARY INFORMATION:

OMB Approval Number: 3060–0729.

Title: Bell Operating Company Provisions of Out-of-Region, Interstate, Interexchange Services, Report and Order No. 96–21.

Form No.: N/A.

Type of Review: Extension of an existing collection.

Respondents: Business or other for-profit.

Number of Respondents: 7.

Estimated Time Per Response: 6,056 hours per recordkeeper.

Total Annual Burden: 42,394 hours.

Estimated Costs Per Respondent: 0.

Needs and Uses: In the Report and Order in CC Docket 96–21 the Commission removed dominant regulation for BOCs that provide out-of-region, interstate, interexchange services through an affiliate that complies with certain safeguards, in order to facilitate the efficient and rapid provision of out-of-region, domestic, interstate interexchange services by the BOCs, as contemplated by the 1996 Act, while still protecting ratepayers and competition in the interexchange

market. These safeguards are required, among other things, that the affiliate maintain separate books of account from the LEC.

OMB Approval Number: 3060–0212.

Title: Section 73.2080 Equal Employment Opportunity Program.

Form No: N/A.

Type of Review: Extension of a currently approved collection.

Respondents: Business or other for-profit; State, Local or Tribal Governments.

Number of Respondents: 15,290.

Estimated Time Per Response: 52 hours per year.

Total Annual Burden: 795,080.

Estimated Costs Per Respondent: 0.

Needs and Uses: Section 73.2080 provides that equal opportunity in employment shall be afforded by all broadcast stations to all qualified persons and no person shall be discriminated against in employment by such stations because of race, color, religion, national origin or sex. Section 73.2080 requires that each broadcast station shall establish, maintain and carry out a program to assure equal opportunity in every aspect of a broadcast station's policy and practice. This section incorporates specific EEO program requirements and general guidelines for meeting those requirements. These guidelines are not intended to be either exclusive or inclusive but simply to provide guidance. This program will provide an appropriate and effective means of informing broadcasters, individuals employed or seeking employment by broadcast stations of its EEO requirements. The data is used by broadcast licensees in the preparation of the station's EEO Program (FCC Form 396) submitted with the license renewal application. The data is also used by FCC staff in field investigations involving equal employment opportunity to assess a broadcast station's EEO program. If this program was not maintained there could be no assurance that efforts are being made to afford equal opportunity in employment.

OMB Approval Number: 3060–0161.

Title: Section 73.61 AM Directional Antenna Field Strength Measurements.

Form No: N/A.

Type of Review: Extension of a currently approved collection.

Respondents: Business or other for-profit.

Number of Respondents: 1,877.

Estimated Time Per Response: 4–50 hours.

Total Annual Burden: 36,082 hours.

Estimated Costs Per Respondent: 0.

Needs and Uses: Section 73.61 requires that each AM station using directional antennas make field strength measurement as often as necessary to insure proper directional antenna system operation. Stations not having approved sampling systems make field strength measurements every three months. Stations with approved sampling systems must make field strength measurements as often as necessary. Also, all AM stations using directional antennas must make partial proofs of performance as often as necessary. The data is used by FCC staff in field inspections/investigations and by AM licensees with directional antennas to ensure that adequate interference protection is maintained between stations and to ensure proper operation of antennas.

Federal Communications Commission.

LaVera F. Marshall,

Acting Secretary.

[FR Doc. 96–25491 Filed 10–3–96; 8:45 am]

BILLING CODE 6712–01–P

Memorandum Opinion and Hearing Designation Order

The Commission, has before it the following matter:

Conduit attachment complaint	CS docket No.
Multimedia Cablevision, Inc. v. Southwestern Bell Telephone Company	96–181

1. The Commission has designated for hearing a conduit attachment complaint filed by Multimedia Cablevision, Inc. (''Multimedia'') against Southwestern Bell Telephone Company (''SWB''). Multimedia's complaint alleges that SWB's conduit attachment rate in Wichita, Kansas is unlawful under Section 224 of the Communications Act. SWB denies that its Wichita rate is unlawful and disputes Multimedia's application of the pole attachment formula in calculating the maximum just and reasonable rate under Section 224.

2. Pursuant to Section 224(b)(1) of the Communications Act of 1934, as amended and Section 1.1411 of the Commission's Rules, the above conduit attachment complaint has been designated for hearing upon the following issues:

(a) To determine whether SWB charged Multimedia conduit attachment rates that exceeded the maximum amounts allowable under Commission rules during the period covered by the complaint.

(b) If SWB has charged Multimedia excessive conduit attachment rates during the period covered by the complaint, to determine the amounts of the refunds, plus interest on refunds accruing after December 30, 1994, SWB must pay Multimedia.

(c) To determine whether Multimedia has underpaid conduit attachment rates during the period covered by the complaint.

(d) If Multimedia has underpaid conduit attachment rates, to determine the amounts Multimedia must pay to SWB.

3. A copy of the complete HDO in this proceeding is available for inspection and copying during normal business hours in the dockets section of the FCC Reference Center (Room 239), 1919 M Street, N.W., Washington, D.C. The complete text may also be purchased from the Commission's duplicating contractor, International Transcription Service, 2100 M Street, N.W., Suite 140, Washington, D.C. 20037 (telephone 202–857–3800).

Federal Communications Commission.

LaVera F. Marshall,

Acting Secretary .

[FR Doc. 96–25424 Filed 10–3–96; 8:45 am]

BILLING CODE 6712–01–P

[Report No. 2156]

Petitions for Reconsideration and Clarification of Action in Rulemaking Proceedings

October 1, 1996.

Petitions for reconsideration and clarification have been filed in the Commission's rulemaking proceedings listed in this Public Notice and published pursuant to 47 CFR Section 1.429(e). The full text of these documents are available for viewing and copying in Room 239, 1919 M Street, N.W., Washington, D.C. or may be purchased from the Commission's copy contractor, ITS, Inc. (202) 857–3800. Oppositions to these petitions must be filed October 21, 1996. See Section 1.4(b) (1) of the Commission's rules (47 CFR 1.4(b)(1)). Replies to an opposition must be filed within 10 days after the time for filing oppositions has expired.

Subject: Access to Telecommunications Equipment and Services by Persons With Disabilities. (CC Docket No. 87–124).

Number of Petition Filed: 1.

Subject: Rulemaking to Amend Parts 1, 2, 21 and 25 of the Commission's Rules to Redesignate the 27.5–29.5 GHz Frequency Band, to Reallocate the 29.5–30.0 GHz Frequency Band, and to Establish Rules and Policies for Local Multipoint Distribution Service and for Fixed Satellite Services. (CC Docket No. 92–297).

Number of Petitions Filed: 3.

Subject: Petition to Amend Part 68 of the Commission's Rules to Include Terminal Equipment Connected to Basic Rate Access Service Provided via Integrated Services Digital Network Access Technology. (CC Docket No. 93–268)

Petition to Amend Part 68 of the Commission's Rules to include Terminal Equipment Connected to Public Switched Digital Services. (RM–7815, RM–6147)

Number of Petitions Filed: 1.

Subject: Policy and Rules Concerning the Interstate, Interexchange Market Place; Implementation of Section 254(g) of the Communications Act of 1934, as amended. (CC Docket No. 96–61)

Number of Petitions Filed: 6.

Subject: Implementation of Section 703 of the Telecommunications Act of 1996; Amendments and Additions to the Commission's Rules Governing Pole Attachments. (CS 96–166)

Number of Petitions Filed: 2.

Federal Communications Commission.

LaVera F. Marshall,

Acting Secretary.

[FR Doc. 96–25490 Filed 10–3–96; 8:45 am]

BILLING CODE 6712–01–M

FEDERAL DEPOSIT INSURANCE CORPORATION

Sunshine Act Meeting

Pursuant to the provisions of the ''Government in the Sunshine Act'' (5 U.S.C. 552b), notice is hereby given that the Federal Deposit Insurance Corporation's Board of Directors will meet in open session at 10:00 a.m. on Tuesday, October 8, 1996, to consider the following matters:

Summary Agenda

No matters are scheduled.

Discussion Agenda

Memorandum and resolution re: Amendment to Part 327—Special Assessment on Institutions that Pay Assessments to the Savings Association Insurance Fund.

Memorandum and resolution re: Savings Association Insurance Fund (''SAIF'')—Assessment Rates for the Semiannual Period in Which the SAIF Reaches the Designated Reserve Ratio.

The meeting will be held in the Board Room on the sixth floor of the FDIC Building located at 550—17th Street, N.W., Washington, D.C.

The FDIC will provide attendees with auxiliary aids (e.g., sign language interpretation) required for this meeting. Those attendees needing such assistance should call (202) 416–2449 (Voice); (202) 416–2004 (TTY), to make necessary arrangements.

Requests for further information concerning the meeting may be directed to Mr. Jerry L. Langley, Executive Secretary of the Corporation, at (202) 898–6757.

Dated: October 1, 1996.

Federal Deposit Insurance Corporation.

Jerry L. Langley,

Executive Secretary.

[FR Doc. 96–25677 Filed 10–2–96; 3:28 pm]

BILLING CODE 6714–01–M

Sunshine Act Meeting

Pursuant to the provisions of the ''Government in the Sunshine Act'' (5 U.S.C. 552b), notice is hereby given that at 10:00 a.m. on Tuesday, October 1, 1996, the Board of Directors of the Federal Deposit Insurance Corporation met in closed session to consider (1) matters relating to the Corporation's corporate and supervisory activities, and (2) a personnel matter.

In calling the meeting, the Board determined, on motion of Vice Chairman Andrew C. Hove, Jr., seconded by Director Joseph H. Neely (Appointive), concurred in by Ms. Julie Williams, acting in the place and stead of Director Eugene A. Ludwig (Comptroller of the Currency), Director Jonathan L. Fiechter (Acting Director, Office of Thrift Supervision), and Chairman Ricki Helfer, that Corporation business required its consideration of the matters on less than seven days' notice to the public; that no earlier notice of the meeting was practicable; that the public interest did not require consideration of the matters in a meeting open to public observation; and that the matters could be considered in a closed meeting by authority of subsections (c)(2), (c)(4), (c)(6), (c)(8), and (c)(9)(A)(ii) of the ''Government in the Sunshine Act'' (5 U.S.C. 552b (c)(2), (c)(4), (c)(6), (c)(8), and (c)(9)(A)(ii)).

The meeting was held in the Board Room of the FDIC Building located at 550—17th Street, NW., Washington, DC.

Dated: October 1, 1996.

Federal Deposit Insurance Corporation.

Valerie J. Best,

Assistant Executive Secretary.

[FR Doc. 96–25678 Filed 10–2–96; 3:28 pm]

BILLING CODE 6714–01–M

FEDERAL EMERGENCY MANAGEMENT AGENCY

Compendium of Flood Map Changes

AGENCY: Federal Emergency Management Agency (FEMA).

ACTION: Notice.

SUMMARY: This notice provides a listing of changes to FEMA flood maps made during the first six (6) months of this year.

DATES: The listing includes changes to FEMA flood maps that became effective January 1, 1996 through June 30, 1996.

FOR FURTHER INFORMATION CONTACT: Gil H. Jamieson, Acting Director, Hazard Identification and Risk Assessment Division, Mitigation Directorate, Federal Emergency Management Agency, Washington, DC 20472, (202)646–4090.

SUPPLEMENTARY INFORMATION: In accordance with § 1360(i) of the National Flood Insurance Reform Act of 1968, as amended, 42 U.S.C. 4101(i), this notice is provided to notify interested parties of changes made National Flood Insurance Program Flood Maps. The listing shows communities affected by map changes, the flood map panel(s) affected, the effective date of the map change and, if applicable, a case number assigned to the map change action. Future notices of map changes will be published every six (6) months.

Dated: September 9, 1996.

Richard W. Krimm,

Acting Associate Director for Mitigation.

Federal Emergency Management Agency—Compendium of Flood Map Changes—January 1, 1996–June 30, 1996

Letters of Map Change—LOMC Determination Type Lookup Table

Determination type	Description
01	218–65 Fill involved.
02	218–70 No fill involved.
05	102 BFE change.
06	102A No BFE change.
08	Denial.
12	Floodway Revision.
17	218–65 Inadvertent inclusion in floodway.
18	218–65 Inadvertent inclusion in floodway.

Region	State	Community name	Panel number	Effective date	Case No.	Determination
1	CT	BETHLEHEM, TOWN OF	0901780005A	04/19/1996		2
1	CT	BRANFORD, TOWN OF	0900730003D	05/17/1996	96–01–017P	5
1	CT	BRANFORD, TOWN OF	0900730006C	04/10/1996		2
1	CT	BRIDGEPORT, CITY OF	0900020005D	01/29/1996		1
1	CT	CANAAN, TOWN OF	0900440002B	04/25/1996		2
1	CT	CANAAN, TOWN OF	0900440002B	04/25/1996		2
1	CT	DANBURY, CITY OF	0900040005B	01/25/1996		2
1	CT	EAST HADDAM, TOWN OF	0900630010B	05/29/1996		2
1	CT	EAST HARTFORD, TOWN OF	0900260003D	01/17/1996		2
1	CT	GUILFORD, TOWN OF	0900770010B	06/17/1996		2
1	CT	GUILFORD, TOWN OF	0900770015B	05/28/1996	96–01–012A	2
1	CT	MIDDLETOWN, CITY OF	0900680009B	02/21/1996		2
1	CT	OLD SAYBROOK, TOWN OF	0900690002C	04/17/1996		2
1	CT	OLD SAYBROOK, TOWN OF	0900690002C	05/02/1996		2
1	CT	REDDING, TOWN OF	0901410001B	01/25/1996		2
1	CT	ROXBURY, TOWN OF	0900510005B	04/09/1996		2
1	CT	SHELTON, CITY OF	0900140005B	03/06/1996		2
1	CT	SHELTON, CITY OF	0900140005B	03/06/1996		2
1	CT	SHELTON, CITY OF	0900140015B	03/05/1996		2
1	CT	STAFFORD, TOWN OF	0901520015B	05/21/1996		2
1	CT	STAMFORD, CITY OF	0900150006C	05/09/1996	96–01–019P	5
1	CT	STONINGTON, BOROUGH OF	0901930001F	05/09/1996		2
1	CT	STRATFORD, TOWN OF	0900160003D	05/30/1996		1
1	CT	THOMASTON, TOWN OF	0900550004B	04/12/1996		2
1	CT	THOMPSON, TOWN OF	0901170020B	01/29/1996		2
1	CT	THOMPSON, TOWN OF	0901170020B	04/29/1996		2
1	CT	TOLLAND, TOWN OF	0901710008A	04/12/1996	95–01–015P	6
1	CT	VERNON, TOWN OF	0901310005B	05/13/1996		2
1	CT	VERNON, TOWN OF	0901310005B	05/31/1996		2
1	CT	WEST HARTFORD,TOWN OF	0950820001C	04/12/1996		2
1	CT	WEST HARTFORD,TOWN OF	0950820001C	04/23/1996		2
1	CT	WEST HAVEN, CITY OF	0900920004B	05/02/1996		2
1	CT	WESTPORT, TOWN OF	0900190004B	05/07/1996		2
1	CT	WETHERSFIELD, TOWN OF	0900400003B	06/13/1996		2
1	CT	WINDSOR, TOWN OF	0900410005D	01/25/1996	96–01–010A	2
1	MA	AGAWAM, TOWN OF	2501330002A	01/17/1996		2
1	MA	AGAWAM, TOWN OF	2501330002A	04/29/1996		2
1	MA	AGAWAM, TOWN OF	2501330002A	05/03/1996		2
1	MA	AMESBURY, TOWN OF	2500750003D	04/17/1996		2
1	MA	AMESBURY, TOWN OF	2500750004C	04/23/1996		2
1	MA	BARNSTABLE, TOWN OF	2500010016D	05/01/1996	96–01–009P	5
1	MA	BARNSTABLE, TOWN OF	2500010016D	05/17/1996	96–01–027P	5
1	MA	BARNSTABLE, TOWN OF	2500010022D	04/11/1996		2
1	MA	BEDFORD, TOWN OF	2552090003C	05/20/1996	96–01–011P	5
1	MA	BEDFORD, TOWN OF	2552090005C	02/07/1996		2
1	MA	BEDFORD, TOWN OF	2552090005C	05/20/1996	96–01–011P	5
1	MA	BEVERLY, CITY OF	2500770006B	03/07/1996		2
1	MA	BROCKTON, CITY OF	2502610005C	04/09/1996		2
1	MA	DARTMOUTH, TOWN OF	2500510019C	05/31/1996		2
1	MA	DARTMOUTH, TOWN OF	2500510019C	06/13/1996		2
1	MA	DARTMOUTH, TOWN OF	2500510020C	06/26/1996		2
1	MA	EAST BRIDGEWATER, TOWN OF	2502640010B	02/21/1996		2
1	MA	EASTON, TOWN OF	2500530005C	04/22/1996	96–01–056A	2
1	MA	EASTON, TOWN OF	2500530010D	01/12/1996		2
1	MA	EASTON, TOWN OF	2500530010D	04/01/1996	95–01–098A	2
1	MA	FALMOUTH, TOWN OF	2552110007G	03/04/1996		2
1	MA	FALMOUTH, TOWN OF	2552110011F	03/12/1996		2
1	MA	GROVELAND, TOWN OF	2500830005C	03/06/1996		2
1	MA	HOLBROOK, TOWN OF	2552120005C	02/21/1996		2
1	MA	HOLLISTON, TOWN OF	2501950004C	04/29/1996		2
1	MA	LEICESTER, TOWN OF	2503130005C	04/10/1996		2
1	MA	LOWELL, CITY OF	2502010003D	04/29/1996		2
1	MA	LOWELL, CITY OF	2502010005C	01/08/1996	95–01–057P	5
1	MA	LYNN, CITY OF	2500880000	06/28/1996		2
1	MA	MALDEN, CITY OF	2502020001B	02/16/1996	95–01–102A	2
1	MA	MANSFIELD, TOWN OF	2500570003A	05/02/1996	95–01–035P	5
1	MA	MARION, TOWN OF	2552130002D	02/20/1996	96–01–022A	2
1	MA	MEDFORD, CITY OF	2502050003B	04/19/1996		2
1	MA	MILFORD, TOWN OF	2503170006B	01/24/1996		2
1	MA	MILLIS, TOWN OF	2502440003C	03/13/1996		2
1	MA	NORTH READING, TOWN OF	2502090004C	05/15/1996	96–01–050A	2
1	MA	NORTON, TOWN OF	2500600006C	04/17/1996		2
1	MA	QUINCY, CITY OF	2552190008B	04/11/1996		2

Region	State	Community name	Panel number	Effective date	Case No.	Determination
1	MA	RAYNHAM, TOWN OF	2500610004B	05/13/1996		1
1	MA	REVERE, CITY OF	2502880001B	03/12/1996		2
1	MA	ROCKPORT, TOWN OF	2501000002C	05/09/1996		2
1	MA	SCITUATE, TOWN OF	2502820002D	06/13/1996		2
1	MA	SHEFFIELD, TOWN OF	2500410009B	06/14/1996		2
1	MA	SWANSEA, TOWN OF	2552210009C	05/09/1996		2
1	MA	TAUNTON, CITY OF	2500660008C	05/07/1996		2
1	MA	TOPSFIELD, TOWN OF	2501060001D	04/10/1996		2
1	MA	WESTWOOD, TOWN OF	2552250005C	05/13/1996		2
1	MA	WESTWOOD, TOWN OF	2552250005C	05/31/1996		2
1	MA	WINTHROP, TOWN OF	2502890001C	05/21/1996		1
1	MA	WORCESTER, CITY OF	2503490010A	03/05/1996		2
1	ME	AUGUSTA, CITY OF	2300670012C	05/29/1996		2
1	ME	BELGRADE, TOWN OF	2302320010B	04/15/1996		2
1	ME	BOOTHBAY HARBOR, TOWN OF	2302130003B	04/03/1996	96–01–032A	18
1	ME	CAPE ELIZABETH, TOWN OF	2300430012C	06/24/1996	96–01–026A	2
1	ME	DEER ISLE, TOWN OF	2302800025B	06/04/1996	96–01–040A	2
1	ME	ELIOT, TOWN OF	2301490010B	03/06/1996		2
1	ME	FARMINGDALE, TOWN OF	2301640008C	01/11/1996	95–01–104A	2
1	ME	FREEPORT, TOWN OF	2300460014B	05/09/1996	96–01–054A	2
1	ME	GLENBURN, TOWN OF	2301060000	01/17/1996		1
1	ME	GOULDSBORO,TOWN OF	2302830020B	05/29/1996		2
1	ME	GRAY, TOWN OF	2300480010A	05/28/1996		2
1	ME	GRAY, TOWN OF	2300480010A	06/20/1996		2
1	ME	HARTLAND, TOWN OF	230361 A	01/10/1996		2
1	ME	HARTLAND, TOWN OF	230361 A	06/12/1996	96–01–046A	2
1	ME	HERMON, TOWN OF	230389 A	05/06/1996		2
1	ME	KINGFIELD, TOWN OF	2300580005B	06/28/1996		2
1	ME	LAMOINE, TOWN OF	2302850005A	02/21/1996		2
1	ME	LAMOINE, TOWN OF	2302850010A	05/07/1996		2
1	ME	NEW LIMERICK, TOWN OF	230432 A	02/12/1996		2
1	ME	ORLAND,TOWN OF	230288 A	01/17/1996		2
1	ME	OWL'S HEAD, TOWN OF	2300750005B	06/04/1996	96–01–028A	18
1	ME	PORTLAND, CITY OF	2300510007B	05/07/1996		2
1	ME	PORTLAND, CITY OF	2300510014B	01/31/1996		2
1	ME	RANGELEY, TOWN OF	230352 A	05/24/1996		2
1	ME	ROME, TOWN OF	2302460005B	06/13/1996		2
1	ME	ROME, TOWN OF	2302460010B	02/07/1996		2
1	ME	SCARBOROUGH, TOWN OF	2300520021D	01/17/1996		2
1	ME	SCARBOROUGH, TOWN OF	2300520021D	01/17/1996		2
1	ME	SEBAGO, TOWN OF	2302060017B	04/10/1996		2
1	ME	SEDGWICK,TOWN OF	2302910010B	06/28/1996	96–01–064A	2
1	ME	SOUTH PORTLAND, CITY OF	2300530008D	04/29/1996		2
1	ME	SOUTHPORT, TOWN OF	2302210001B	01/17/1996	96–01–008A	2
1	ME	ST. ALBANS, TOWN OF	230369 A	02/07/1996		2
1	ME	WINDHAM, TOWN OF	2301890030B	04/23/1996		2
1	NH	BARTLETT, TOWN OF	3300100010C	02/28/1996	96–01–020A	1
1	NH	BEDFORD, TOWN OF	3300830005C	05/29/1996		2
1	NH	BEDFORD, TOWN OF	3300830005C	06/06/1996		2
1	NH	DANVILLE, TOWN OF	330199 A	01/12/1996		2
1	NH	DANVILLE, TOWN OF	330199 A	01/12/1996		2
1	NH	DANVILLE, TOWN OF	330199 A	01/16/1996		2
1	NH	DANVILLE, TOWN OF	3301999999A	04/30/1996	96–01–024A	2
1	NH	GILFORD, TOWN OF	3300040005C	04/10/1996	96–01–018A	1
1	NH	GREENLAND, TOWN OF	3302100005B	01/24/1996		2
1	NH	LACONIA, CITY OF	3300050005B	04/10/1996		2
1	NH	LACONIA, CITY OF	3300050005B	06/25/1996		2
1	NH	PETERBOROUGH, TOWN OF	3301010010A	05/02/1996		2
1	NH	SALEM, TOWN OF	3301420005B	03/04/1996		2
1	NH	SEABROOK, TOWN OF	3301430000	01/17/1996		2
1	NH	WAKEFIELD, TOWN OF	3300190005A	01/25/1996		2
1	NH	WAKEFIELD, TOWN OF	3300190005A	04/16/1996		2
1	NH	WOLFEBORO, TOWN OF	3302390015A	06/25/1996		2
1	RI	EAST GREENWICH, TOWN OF	4453970002B	06/28/1996		1
1	RI	EAST GREENWICH, TOWN OF	4453970003B	04/11/1996		2
1	RI	EAST GREENWICH, TOWN OF	4453970003B	04/11/1996		2
1	RI	MIDDLETOWN, TOWN OF	4454010003D	05/15/1996		2
1	RI	NORTH KINGSTOWN, TOWN OF	4454040009B	03/04/1996		2
1	RI	PROVIDENCE, CITY OF	4454060004E	04/11/1996		2
1	RI	WARREN, TOWN OF	4454080002D	05/21/1996		2
1	RI	WARWICK, CITY OF	4454090005E	04/18/1996		2
1	RI	WARWICK, CITY OF	4454090006E	04/09/1996		2
1	RI	WEST WARWICK, TOWN OF	4400070002B	03/12/1996		2

Region	State	Community name	Panel number	Effective date	Case No.	Determination
1	VT	COLCHESTER, TOWN OF	5000330008B	06/25/1996		2
1	VT	FERRISBURG, TOWN OF	5000020010B	03/07/1996		2
2	NJ	ABERDEEN, TOWNSHIP OF	3403120010A	05/09/1996	NJ 1811	2
2	NJ	ASBURY PARK, CITY OF	3402850001C	01/26/1996	NJ 1662	2
2	NJ	BERKELEY, TOWNSHIP OF	3403690004C	03/08/1996	NJ 1727	2
2	NJ	BERKELEY, TOWNSHIP OF	3403690004C	03/08/1996	NY 1727	2
2	NJ	BRIDGEWATER, TOWNSHIP OF	3404320004C	03/05/1996	NJ 1739	2
2	NJ	CARNEYS POINT, TOWNSHIP OF	3404240010B	04/09/1996	96–02–048A	2
2	NJ	CHERRY HILL, TOWNSHIP OF	3401290006C	04/02/1996	96–02–012A	1
2	NJ	DENVILLE, TOWNSHIP OF	3452920005B	03/29/1996	NJ 1768	2
2	NJ	DOVER, TOWNSHIP OF	3452930003D	01/23/1996	NJ 1691	2
2	NJ	FAIR LAWN, BOROUGH OF	34003C0159F	05/01/1996	96–02–024A	2
2	NJ	FAIR LAWN, BOROUGH OF	34003C0167F	06/10/1996	96–02–049P	6
2	NJ	FAIR LAWN, BOROUGH OF	34003C0167F	01/16/1996	NJ 1605	2
2	NJ	FAIR LAWN, BOROUGH OF	34003C0167F	01/16/1996	NJ 1667	2
2	NJ	FAIR LAWN, BOROUGH OF	34003C0178F	01/12/1996	NJ 1630	2
2	NJ	FAIR LAWN, BOROUGH OF	34003C0186F	01/26/1996	NJ 1695	2
2	NJ	FAIRFIELD, BOROUGH OF	3452950004C	05/09/1996	NJ 1806	2
2	NJ	FAR HILLS, BOROUGH OF	3404330001A	01/17/1996	NJ 1670	2
2	NJ	FRANKLIN LAKES, BOROUGH OF	34003C0152F	04/29/1996	NJ 1770	2
2	NJ	FRANKLIN, TOWNSHIP OF	3405630004A	05/28/1996	NJ 1810	2
2	NJ	HAZLET, TOWNSHIP OF	3402980002B	04/09/1996	96–02–054A	2
2	NJ	HAZLET, TOWNSHIP OF	3402980002B	01/12/1996	NJ 1663	2
2	NJ	HAZLET, TOWNSHIP OF	3402980002B	01/26/1996	NJ 1699	2
2	NJ	HAZLET, TOWNSHIP OF	3402980002B	04/15/1996	NJ 1783	2
2	NJ	HILLSBOROUGH, TOWNSHIP OF	3404360015B	06/04/1996	96–02–046A	2
2	NJ	HILLSBOROUGH, TOWNSHIP OF	3404360015B	04/19/1996	NJ 1736	2
2	NJ	HILLSDALE, BOROUGH OF	34003C0093F	01/12/1996	NJ 1423	2
2	NJ	HO-HO-KUS, BOROUGH OF	34003C0176F	06/14/1996	NJ 1853	2
2	NJ	KENILWORTH, BOROUGH OF	3404660001B	04/03/1996	95–02–057P	5
2	NJ	LEONIA, BOROUGH OF	34003C0276F	05/21/1996	96–02–058A	2
2	NJ	LINWOOD, CITY OF	3400110002B	06/03/1996	NJ 1847	2
2	NJ	MAHWAH, TOWNSHIP OF	34003C0059F	01/16/1996	NJ 1641	2
2	NJ	MARLBORO, TOWNSHIP OF	3403100005B	03/29/1996	NJ 1698	2
2	NJ	MONTVILLE, TOWNSHIP OF	3403490001B	03/05/1996	NJ 1651	2
2	NJ	MONTVILLE, TOWNSHIP OF	3403490001B	03/05/1996	NJ 1724	2
2	NJ	MOORESTOWN, TOWNSHIP OF	3401050005C	03/19/1996	NJ 1718	2
2	NJ	MOORESTOWN, TOWNSHIP OF	3401050005C	04/15/1996	NJ 1730	2
2	NJ	MOUNT OLIVE, TOWNSHIP OF	3403530008B	05/09/1996	NJ 1808	2
2	NJ	NATIONAL PARK, BOROUGH OF	3402090001C	01/12/1996	NJ 1603	2
2	NJ	NEW MILFORD, BOROUGH OF	34003C0192F	01/16/1996	NJ 1635	2
2	NJ	OLD BRIDGE, TOWN OF	3402650004D	01/23/1996	NJ 1693	1
2	NJ	OLD BRIDGE, TOWN OF	3402650004D	05/09/1996	NY 1741	2
2	NJ	OLD BRIDGE, TOWN OF	3402650005E	05/09/1996	96–02–047P	6
2	NJ	ORANGE, CITY OF	3401920001A	06/03/1996	NJ 1846	2
2	NJ	PEMBERTON, TOWNSHIP OF	3401120035A	05/09/1996	NJ 1753	2
2	NJ	PEQUANNOCK, VILLAGE OF	3453110001C	05/09/1996	NJ 1687	1
2	NJ	PEQUANNOCK, VILLAGE OF	3453110001C	04/29/1996	NJ 1793	2
2	NJ	PEQUANNOCK, VILLAGE OF	3453110002B	04/15/1996	NJ 1781	2
2	NJ	PLAINFIELD, CITY OF	3453120003C	04/19/1996	NJ 1766	2
2	NJ	POMPTON LAKES, BORO OF	3455280001E	05/28/1996	NJ 1813	2
2	NJ	RAMSEY, BOROUGH OF	34003C0067F	05/09/1996	96–02–082A	1
2	NJ	RAMSEY, BOROUGH OF	34003C0067F	06/07/1996	NJ 1223	2
2	NJ	RANDOLPH, TOWNSHIP OF	3403580010D	03/26/1996	95–02–031P	6
2	NJ	ROSELLE, BOROUGH OF	3404720001A	04/02/1996	95–02–057P	5
2	NJ	ROXBURY, TOWNSHIP OF	3403620003B	03/14/1996	NJ 1747	2
2	NJ	SADDLE BROOK, TOWNSHIP OF	34003C0189F	04/29/1996	96–02–062A	2
2	NJ	SADDLE RIVER, BOROUGH OF	34003C0086F	01/16/1996	NJ 1634	2
2	NJ	SAYREVILLE, BOROUGHS OF	3402760001C	06/14/1996	NJ 1862	2
2	NJ	UPPER SADDLE RIVER, BOROUGH OF	34003C0086F	01/12/1996	NJ 1675	2
2	NJ	WEST DEPTFORD, TOWNSHIP OF	3402140003B	01/29/1996	NJ 1603	2
2	NJ	WYCKOFF, TOWNSHIP OF	34003C0068F	05/09/1996	NJ 1812	2
2	NY	ALDEN, TOWN OF	3602250010C	01/26/1996	NY 1705	2
2	NY	AMHERST, TOWN OF	3602260015D	05/08/1996	95–02–037P	5
2	NY	AUBURN, CITY OF	3601020005C	05/09/1996	NY 1815	2
2	NY	BABYLON, VILLAGE OF	3607910005D	03/05/1996	NY 1729	2
2	NY	BABYLON,TOWN OF	3607900034D	03/05/1996	NY 1735	2
2	NY	BEACON, CITY OF	3602170001B	03/04/1996	96–02–021P	6
2	NY	BLOOMING GROVE, TOWN OF	3606080005B	03/14/1996	NY 1751	2
2	NY	BOONVILLE, TOWN OF	3605190005B	01/26/1996	NY 1673	2
2	NY	BOONVILLE, TOWN OF	3605190005B	02/06/1996	NY 1673	2
2	NY	BOONVILLE, VILLAGE OF	360520 B	03/14/1996	NY 1701	2
2	NY	BUFFALO, CITY OF	3602300010B	01/26/1996	NY 1703	2

Region	State	Community name	Panel number	Effective date	Case No.	Determination
2	NY	BUFFALO, CITY OF	3602300010B	02/06/1996	NY 1703	2
2	NY	BUFFALO, CITY OF	3602300010B	02/16/1996	NY 1723	2
2	NY	BUFFALO, CITY OF	3602300010B	04/29/1996	NY 1773	2
2	NY	BUFFALO, CITY OF	3602300010B	04/15/1996	NY 1774	2
2	NY	BUFFALO, CITY OF	3602300010B	05/09/1996	NY 1780	2
2	NY	BUFFALO, CITY OF	3602300010B	04/29/1996	NY 1799	2
2	NY	BUFFALO, CITY OF	3602300010B	04/29/1996	NY 1800	2
2	NY	BUFFALO, CITY OF	3602300010B	04/29/1996	NY 1801	2
2	NY	BUFFALO, CITY OF	3602300010B	06/07/1996	NY 1849	2
2	NY	BUFFALO, CITY OF	3602300010B	06/07/1996	NY 1850	2
2	NY	BUFFALO, CITY OF	3602300010B	06/07/1996	NY 1851	2
2	NY	CAMBRIA, TOWN OF	3604990005B	02/26/1996	96–02–013P	6
2	NY	CAMMILLUS, TOWN OF	3605700007C	01/12/1996	NY 1669	2
2	NY	CAMMILLUS, TOWN OF	3605700007C	03/12/1996	NY 1785	2
2	NY	CHAZY, TOWN OF	3613100015B	03/06/1996	96–02–038A	2
2	NY	CHESTER, TOWN OF	3608700010B	06/12/1996	96–02–088A	2
2	NY	CHILI, TOWN OF	3604120015A	05/28/1996	NY 1829	2
2	NY	CHILI, TOWN OF	3604120015A	05/28/1996	NY 1830	2
2	NY	CHILI, TOWN OF	3604120015A	05/28/1996	NY 1831	2
2	NY	CICERO, TOWN OF	3605720004D	01/17/1996	96–02–020A	2
2	NY	CICERO, TOWN OF	3605720005D	01/26/1996	NY 1676	2
2	NY	CICERO, TOWN OF	3605720006D	03/05/1996	NY 1711	2
2	NY	CLARENCE, TOWN OF	3602320005B	05/09/1996	NY 1505	1
2	NY	CLARENCE, TOWN OF	3602320005B	01/26/1996	NY 1614	2
2	NY	CLARENCE, TOWN OF	3602320005B	01/12/1996	NY 1644	2
2	NY	CLARENCE, TOWN OF	3602320005B	01/12/1996	NY 1652	2
2	NY	CLARENCE, TOWN OF	3602320005B	01/26/1996	NY 1702	2
2	NY	CLARENCE, TOWN OF	3602320005C	04/19/1996	NY 1758	2
2	NY	CLARENCE, TOWN OF	3602320005C	03/29/1996	NY 1764	2
2	NY	CLARENCE, TOWN OF	3602320005C	03/29/1996	NY 1769	2
2	NY	CLARENCE, TOWN OF	3602320005C	04/15/1996	NY 1786	2
2	NY	CLARENCE, TOWN OF	3602320005C	05/09/1996	NY 1814	2
2	NY	CLARENCE, TOWN OF	3602320005C	06/03/1996	NY 1833	2
2	NY	CLARENCE, TOWN OF	3602320005C	06/03/1996	NY 1842	2
2	NY	CLARENCE, TOWN OF	3602320005C	06/03/1996	NY 1845	2
2	NY	CLARENCE, TOWN OF	3602320005C	06/14/1996	NY 1859	2
2	NY	CLARENCE, TOWN OF	3602320005C	06/14/1996	NY 1864	2
2	NY	CLARENCE, TOWN OF	3602320011C	05/28/1996	NY 1832	2
2	NY	CLARENCE, TOWN OF	3602320011C	06/03/1996	NY 1838	1
2	NY	CLARENCE, TOWN OF	3602320012C	06/03/1996	NY 1844	2
2	NY	CLARENCE, TOWN OF	3602320013C	05/03/1996	96–02–072A	2
2	NY	CLARENCE, TOWN OF	3602320013C	05/23/1996	96–02–076A	2
2	NY	CLARENCE, TOWN OF	3602320013C	05/03/1996	96–02–078A	2
2	NY	CLARENCE, TOWN OF	3602320013C	05/03/1996	96–02–080A	2
2	NY	CLARENCE, TOWN OF	3602320013C	04/19/1996	NY 1748	2
2	NY	CLARENCE, TOWN OF	3602320013C	05/09/1996	NY 1757	2
2	NY	CLARENCE, TOWN OF	3602320013C	03/29/1996	NY 1760	2
2	NY	CLARENCE, TOWN OF	3602320013C	03/29/1996	NY 1761	2
2	NY	CLARENCE, TOWN OF	3602320013C	03/29/1996	NY 1762	2
2	NY	CLARENCE, TOWN OF	3602320013C	03/29/1996	NY 1763	2
2	NY	CLARENCE, TOWN OF	3602320013C	05/09/1996	NY 1765	2
2	NY	CLARENCE, TOWN OF	3602320013C	06/14/1996	NY 1860	2
2	NY	CLARENCE, TOWN OF	3602320014C	03/19/1996	NY 1733	2
2	NY	CLARENCE, TOWN OF	3602320014C	04/15/1996	NY 1775	2
2	NY	CLARENCE, TOWN OF	3602320014C	04/29/1996	NY 1778	2
2	NY	CLARENCE, TOWN OF	3602320014C	04/15/1996	NY 1787	2
2	NY	CLARENCE, TOWN OF	3602320014C	05/09/1996	NY 1816	2
2	NY	CLARKSON, TOWN OF	3604130025B	03/19/1996	96–02–019P	6
2	NY	CORNWALL, TOWN OF	3606110004B	05/09/1996	NY 1805	2
2	NY	CORTLANDT, TOWN OF	3609060008B	02/06/1996	NY 1716	2
2	NY	COXSACKIE, TOWN OF	3611150009A	05/09/1996	NY 1803	2
2	NY	DEER PARK, TOWN OF	3606120014C	06/14/1996	NY 1858	2
2	NY	DELEVAN, VILLAGE OF	361368 A	05/09/1996	NY 1713	2
2	NY	DEPOSIT, VILLAGE OF	3600430005B	06/07/1996	NY 1841	2
2	NY	EAST GREENBUSH, TOWN OF	3611330003A	01/26/1996	NY 1664	2
2	NY	ELLENBURG, TOWN OF	361382 A	03/29/1996	NY 1571	2
2	NY	ELMA,TOWN OF	360239 A	01/26/1996	NY 1671	2
2	NY	ELMA,TOWN OF	360239 A	02/06/1996	NY 1697	2
2	NY	ELMA,TOWN OF	360239 A	04/29/1996	NY 1772	2
2	NY	FINE, TOWN OF	361177 B	01/26/1996	NY 1686	2
2	NY	FINE, TOWN OF	361177 B	01/17/1996	NY 1692	2
2	NY	FLEMING, TOWN OF	360110 B	06/07/1996	NY 1835	2
2	NY	GATES, TOWN OF	3604160002B	03/29/1996	NY 1759	2

Region	State	Community name	Panel number	Effective date	Case No.	Determination
2	NY	GENESEO, VILLAGE OF	361452 B	01/17/1996	NY 1680	2
2	NY	GENEVA, TOWN OF	3606000002B	06/03/1996	NY 1834	2
2	NY	GORHAM, TOWN OF	3606010003B	04/16/1996	96–02–042A	2
2	NY	GOWANDA, VILLAGE OF	3600750001A	03/29/1996	NY 1600	2
2	NY	GREECE, TOWN OF	3604170004E	01/26/1996	NY 1710	2
2	NY	GREENFIELD, TOWN OF	36091C0288E	06/04/1996	NY 1837	2
2	NY	HAMLIN, TOWN OF	3604180002C	06/11/1996	NY 1717	2
2	NY	HARRIETSTOWN, TOWN OF	3611240005A	01/26/1996	NY 1640	2
2	NY	HARRISON, TOWN OF	3609120011B	01/26/1996	NY 1694	2
2	NY	HEMPSTEAD, TOWN OF	3604670046B	05/09/1996	NY 1789	2
2	NY	HUNTINGTON, TOWN OF	3607960006D	05/20/1996	96–02–060A	2
2	NY	IRONDEQUOIT, TOWN OF	3604220005B	06/13/1996	95–02–065P	6
2	NY	IRONDEQUOIT, TOWN OF	3604220005B	03/29/1996	NY 1737	2
2	NY	LANCASTER, TOWN OF	3602490010B	04/19/1996	NY 1696	1
2	NY	LLOYD, TOWN OF	3610120005C	05/28/1996	NY 1638	2
2	NY	MAMARONECK, VILLAGE OF	3609160002D	02/16/1996	NY 1719	2
2	NY	MAMARONECK, VILLAGE OF	3609160002D	03/05/1996	NY 1734	2
2	NY	MANLIUS, TOWN OF	3605840019D	05/09/1996	NY 1755	1
2	NY	MANLIUS, TOWN OF	3605840019D	05/09/1996	NY 1755–A	1
2	NY	MILO, TOWN OF	360961 C	01/26/1996	NY 1715	2
2	NY	MOUNT KISCO, VILLAGE OF	3609180001B	01/19/1996	96–02–014A	2
2	NY	MOUNT PLEASANT, TOWN OF	3609190015C	02/06/1996	NY 1704	2
2	NY	NEW YORK, CITY OF	3604970082C	03/05/1996	NY 1722	2
2	NY	NEW YORK, CITY OF	3604970082C	04/15/1996	NY 1792	2
2	NY	NEW YORK, CITY OF	3604970082C	06/14/1996	NY 1861	2
2	NY	NEW YORK, CITY OF	3604970092C	02/16/1996	NY 1487	2
2	NY	NEW YORK, CITY OF	3604970111C	02/22/1996	96–02–034A	2
2	NY	NEW YORK, CITY OF	3604970125D	06/14/1996	NY 1752	2
2	NY	NEWSTEAD, TOWN OF	3602510010D	03/05/1996	NY 1726	2
2	NY	NIAGARA FALLS, CITY OF	3605060003C	01/23/1996	NY 1712	2
2	NY	NORTH GREENBUSH, TOWN OF	3611640002A	06/03/1996	NY 1848	2
2	NY	NORTH GREENBUSH, TOWN OF	3611640005A	06/03/1996	NY 1848	2
2	NY	NORWICH, CITY OF	3601610001B	02/16/1996	NY 1725	2
2	NY	NORWICH, CITY OF	3601610001B	05/28/1996	NY 1804	2
2	NY	ORANGETOWN, TOWN OF	3606860005C	04/19/1996	NY 1742	2
2	NY	ORANGETOWN, TOWN OF	3606860005C	03/14/1996	NY 1743	2
2	NY	OYSTER BAY, TOWN OF	3604830024C	06/03/1996	NY 1839	2
2	NY	PITTSFORD, TOWN OF	3604290010C	06/03/1996	NY 1843	2
2	NY	PORT JERVIS, CITY OF	3609760001B	04/29/1996	NY 1797	2
2	NY	POTSDAM,TOWN OF	361185 A	06/07/1996	NY 1754	2
2	NY	QUEENSBURY, TOWN OF	3608790020B	04/29/1996	NY 1807	2
2	NY	ROSENDALE, TOWN OF	3608620007B	06/14/1996	NY 1852	2
2	NY	SCHROEPPEL, TOWN OF	3606620020B	02/06/1996	NY 1690	2
2	NY	SCHROON, TOWN OF	3611580025C	06/14/1996	NY 1863	2
2	NY	SENECA FALLS, TOWN OF	3607560006B	04/19/1996	NY 1767	2
2	NY	SOUTHAMPTON, TOWN OF	3653420033D	03/14/1996	NY 1746	2
2	NY	SOUTHOLD,TOWN OF	3608130116D	05/23/1996	96–02–057P	5
2	NY	SOUTHOLD,TOWN OF	3608130116D	05/28/1996	NY 1819	2
2	NY	SPRING VALLEY, VILLAGE OF	3653440002C	02/06/1996	NY 1700	2
2	NY	TROY, CITY OF	3606770004B	04/30/1996	96–02–032A	1
2	NY	VERONA, TOWN OF	3605610033B	05/09/1996	NY 1776	2
2	NY	WALWORTH, TOWN OF	3612280016C	04/15/1996	NY 1771	1
2	NY	WARWICK, TOWN OF	3606360013B	04/29/1996	NY 1796	2
2	NY	WARWICK, VILLAGE OF	3606370001C	04/15/1996	NY 1782	1
2	NY	WEBB, TOWN OF	360321 A	05/28/1996	NY 1809	2
2	NY	WEBSTER, TOWN OF	3604360005C	01/17/1996	96–02–026A	2
2	NY	WESLEY HILLS, VILLAGE OF	3616160001C	04/02/1996	NY 1650	2
2	NY	WEST SENECA, TOWN OF	3602620003B	05/09/1996	NY 1817	2
2	NY	WHEATFIELD, TOWN OF	3605130007D	01/26/1996	NY 1616	1
2	NY	WILLIAMSVILLE, VILLAGE OF	3602630001B	05/08/1996	95–02–037P	5
2	NY	WOODSTOCK, TOWN OF	3608680028B	05/09/1996	NY 1820	2
2	NY	YORKTOWN, TOWN OF	3609370012C	06/14/1996	NY 1855	2
2	PR	PUERTO RICO, COMMONWEALTH OF	7200000046C	03/04/1996	96–02–006A	1
2	PR	PUERTO RICO, COMMONWEALTH OF	7200000049B	01/26/1996	PR 1668	2
2	PR	PUERTO RICO, COMMONWEALTH OF	7200000053C	06/06/1996	96–02–052A	1
2	PR	PUERTO RICO, COMMONWEALTH OF	7200000053C	03/14/1996	PR 1413	2
2	PR	PUERTO RICO, COMMONWEALTH OF	7200000281C	06/24/1996	96–02–066A	1
2	PR	PUERTO RICO, COMMONWEALTH OF	7200000292C	03/18/1996	96–02–040A	1
2	VI	VIRGIN ISLANDS, COMMONWEALTH OF	7800000010E	04/24/1996	96–02–050A	1
2	VI	VIRGIN ISLANDS, COMMONWEALTH OF	7800000020E	03/05/1996	VI 1721	2
2	VI	VIRGIN ISLANDS, COMMONWEALTH OF	7800000065D	05/23/1996	96–02–037P	5
3	DE	KENT COUNTY*	1000010075B	02/29/1996	95–03–404A	2
3	DE	NEW CASTLE COUNTY*	10003C0135F	06/25/1996	96–03–294A	2

Region	State	Community name	Panel number	Effective date	Case No.	Determination
3	DE	NEW CASTLE COUNTY*	1050850085B	01/11/1996	95–03–340A	2
3	DE	NEW CASTLE, CITY OF	10003C0165F	05/13/1996	96–03–290A	2
3	DE	SUSSEX COUNTY*	10005C0100F	04/11/1996	96–03–300A	2
3	MD	ANNAPOLIS, CITY OF	2400090005B	04/23/1996	96–03–252A	2
3	MD	ANNE ARUNDEL COUNTY*	2400080014C	03/21/1996	96–03–260A	2
3	MD	ANNE ARUNDEL COUNTY*	2400080014C	05/21/1996	96–03–394A	2
3	MD	ANNE ARUNDEL COUNTY*	2400080043C	01/11/1996	95–03–446A	2
3	MD	ANNE ARUNDEL COUNTY*	2400080043C	05/21/1996	96–03–396A	2
3	MD	ANNE ARUNDEL COUNTY*	2400080048C	06/25/1996	96–03–450A	2
3	MD	ANNE ARUNDEL COUNTY*	2400080052D	01/30/1996	96–03–192A	2
3	MD	ANNE ARUNDEL COUNTY*	2400080052D	05/29/1996	96–03–416A	2
3	MD	ANNE ARUNDEL COUNTY*	2400080059C	02/22/1996	96–03–064A	2
3	MD	BALTIMORE COUNTY*	2400100025B	02/22/1996	96–03–062A	2
3	MD	BALTIMORE COUNTY*	2400100210B	05/28/1996	96–03–242A	2
3	MD	BALTIMORE COUNTY*	2400100355C	02/27/1996	96–03–202A	2
3	MD	BALTIMORE COUNTY*	2400100355C	05/01/1996	96–03–284A	2
3	MD	BALTIMORE COUNTY*	2400100380B	06/18/1996	96–03–562A	1
3	MD	BALTIMORE COUNTY*	2400100455B	02/07/1996	96–03–124A	2
3	MD	BALTIMORE COUNTY*	2400100510B	03/12/1996	96-03-168A	2
3	MD	BALTIMORE, CITY OF	2400870011D	06/18/1996	96-03-320A	1
3	MD	BALTIMORE, CITY OF	2400870012D	06/18/1996	96-03-320A	1
3	MD	CARROLL COUNTY*	2400150100B	04/23/1996	94-03-139P	5
3	MD	CARROLL COUNTY*	2400150150B	04/25/1996	96-03-326A	2
3	MD	ELKTON, TOWN OF	2400220003C	02/02/1996	95-03-362A	2
3	MD	FREDERICK COUNTY*	2400270110A	01/23/1996	96-03-070A	2
3	MD	GAITHERSBURG, CITY OF	2400500004B	02/27/1996	96-03-021P	5
3	MD	GARRETT COUNTY*	2400340105C	06/28/1996	96-03-212A	2
3	MD	HARFORD COUNTY*	2400400058A	02/22/1996	95-03-450A	2
3	MD	HOWARD COUNTY*	2400440035B	06/11/1996	96-03-226A	1
3	MD	KENT COUNTY*	2400450220B	03/27/1996	96-03-043P	5
3	MD	LAUREL, CITY OF	2400530001D	02/01/1996	96-03-156A	1
3	MD	MONTGOMERY COUNTY*	2400490175C	01/19/1996	95-03-392A	2
3	MD	MONTGOMERY COUNTY*	2400490175C	04/25/1996	96-03-292A	2
3	MD	MONTGOMERY COUNTY*	2400490175C	04/25/1996	96-03-292A	2
3	MD	PRINCE GEORGES COUNTY*	2452080080C	05/13/1996	96-03-118A	2
3	MD	QUEEN ANNES COUNTY	2400540059B	01/19/1996	96-03-100A	2
3	MD	ROCK HALL, TOWN OF	2400480001B	03/27/1996	96-03-043P	5
3	MD	SOMERSET COUNTY*	2400610050A	02/20/1996	96-03-084A	2
3	MD	TALBOT COUNTY*	2400660023A	02/07/1996	96-03-162A	2
3	MD	WASHINGTON COUNTY*	2400700210A	06/06/1996	96-03-460A	2
3	PA	BROCKWAY, BOROUGH OF	4205090001B	05/21/1996	96-03-258A	2
3	PA	CATHARINE, TOWNSHIP OF	4209620008B	01/30/1996	96-03-048A	2
3	PA	COLLEGEVILLE, BOROUGH OF	4219000001A	06/10/1996	96-03-082A	2
3	PA	COOLBOUGH, TOWNSHIP OF	4218860035B	03/04/1996	96-03-176A	2
3	PA	COOLBOUGH, TOWNSHIP OF	4218860035B	04/16/1996	96-03-288A	2
3	PA	CRANBERRY, TOWNSHIP OF	4212170010B	06/06/1996	96-03-432A	2
3	PA	DOUGLASS, TOWNSHIP OF	4219110005B	06/04/1996	96-03-236A	2
3	PA	DOUGLASS, TOWNSHIP OF	4219110005B	05/03/1996	96-03-312A	2
3	PA	DOVER, TOWNSHIP OF	4209200005B	02/07/1996	95-03-470A	2
3	PA	FISHING CREEK, TOWNSHIP OF	4215500015B	04/23/1996	96-03-340A	2
3	PA	FLEMINGTON, BOROUGH OF	420326 B	02/26/1996	95-03-147P	5
3	PA	HARBORCREEK, TOWNSHIP OF	4211440010B	02/02/1996	95-03-492A	2
3	PA	HARRISBURG,CITY OF	4203800002A	02/16/1996	96-03-170A	2
3	PA	LITITZ, BOROUGH OF	4205540001B	03/26/1996	96-03-238A	2
3	PA	LOCK HAVEN, CITY OF	4203280001A	05/06/1996	96-03-246A	2
3	PA	LOWER PAXTON, TOWNSHIP OF	4203840001B	06/20/1996	96-03-468A	2
3	PA	LOWER SOUTHAMPTON, TOWNSHIP OF	4201920005D	04/24/1996	96-03-386A	2
3	PA	MATAMORAS, BOROUGH OF	4207580005A	01/11/1996	96-03-014A	2
3	PA	MATAMORAS, BOROUGH OF	4207580005A	01/11/1996	96-03-110A	2
3	PA	MENALLEN, TOWNSHIP OF	4212560020A	04/09/1996	96-03-164A	2
3	PA	MIDDLE SMITHFIELD, TOWNSHIP OF	4218900025B	06/26/1996	96-03-348A	2
3	PA	MIDDLESEX, TOWNSHIP OF	4212290010B	03/06/1996	96-03-138A	2
3	PA	MURRYSVILLE, CITY OF	4212070004B	06/10/1996	96-03-308A	2
3	PA	NORTHAMPTON, TOWNSHIP OF	4209880010B	04/15/1996	96-03-150A	2
3	PA	OAKMONT, BOROUGH OF	42003C0239E	01/19/1996	95-03-111P	5
3	PA	OAKMONT, BOROUGH OF	42003C0239E	05/30/1996	96-03-045P	5
3	PA	PENN, TOWNSHIP OF	4210250002C	03/21/1996	95-03-135P	6
3	PA	PENN, TOWNSHIP OF	4210250003C	03/21/1996	95-03-135P	6
3	PA	PENN, TOWNSHIP OF	4221830015B	01/17/1996	96-03-060A	2
3	PA	PENN, TOWNSHIP OF	4221830015B	02/21/1996	96-03-068A	2
3	PA	PLAINS, TOWNSHIP OF	4206210001B	06/27/1996	96-03-067P	6
3	PA	RICHLAND, TOWNSHIP OF	42003C0070E	05/08/1996	96-03-220A	2
3	PA	ROCKLAND, TOWNSHIP OF	4210980005B	05/28/1996	96-03-047P	6

Region	State	Community name	Panel number	Effective date	Case No.	Determination
3	PA	SLIPPERY ROCK, TOWNSHIP OF	420222 A	01/07/1996	95-03-059P	6
3	PA	STONYCREEK, TOWNSHIP OF	4202410002B	04/22/1996	96-03-102A	1
3	PA	TIOGA, TOWNSHIP OF	4208280008C	04/03/1996	96-03-038A	2
3	PA	UPPER CHICHESTER, TOWNSHIP OF	42045C0055E	05/07/1996	95-03-127P	6
3	PA	UPPER MACUNGIE, TOWNSHIP OF	4210440010C	06/03/1996	96-03-041P	6
3	VA	ARLINGTON COUNTY*	5155200002B	02/22/1996	96-03-166A	2
3	VA	ARLINGTON COUNTY*	5155200002B	02/27/1996	96-03-194A	2
3	VA	BEDFORD COUNTY*	5100160100A	03/18/1996	96-03-182A	2
3	VA	BUENA VISTA, CITY OF	5100270005A	01/24/1996	95-03-087R	8
3	VA	CHESTERFIELD COUNTY*	5100350047B	04/10/1996	96-03-174A	2
3	VA	CULPEPER, TOWN OF	5100420002B	04/09/1996	96-03-254A	2
3	VA	FAIRFAX COUNTY*	5155250025D	05/07/1996	96-03-414A	2
3	VA	FAIRFAX COUNTY*	5155250025D	05/07/1996	96-03-414A	2
3	VA	FAIRFAX COUNTY*	5155250025D	05/31/1996	96-03-534A	2
3	VA	FAIRFAX COUNTY*	5155250050D	02/28/1996	96-03-158A	2
3	VA	FAIRFAX COUNTY*	5155250050D	06/12/1996	96-03-558A	2
3	VA	FAIRFAX COUNTY*	5155250075D	02/02/1996	96-03-008A	2
3	VA	FAIRFAX COUNTY*	5155250075D	01/18/1996	96-03-090A	2
3	VA	FAIRFAX COUNTY*	5155250075D	01/18/1996	96-03-090A	2
3	VA	FAIRFAX COUNTY*	5155250075D	02/22/1996	96-03-198A	2
3	VA	FAIRFAX COUNTY*	5155250075D	05/01/1996	96-03-264A	2
3	VA	FAIRFAX COUNTY*	5155250075D	05/01/1996	96-03-264A	2
3	VA	FAIRFAX COUNTY*	5155250075D	06/20/1996	96-03-452A	2
3	VA	FAIRFAX COUNTY*	5155250075D	06/20/1996	96-03-452A	2
3	VA	FAIRFAX COUNTY*	5155250075D	06/18/1996	96-03-536A	2
3	VA	FAIRFAX COUNTY*	5155250075D	06/18/1996	96-03-536A	2
3	VA	FAIRFAX COUNTY*	5155250075D	06/20/1996	96-03-548A	2
3	VA	FAIRFAX COUNTY*	5155250075D	06/20/1996	96–03–548A	2
3	VA	FAIRFAX COUNTY*	5155250083D	06/25/1996	96–03–544A	2
3	VA	FAIRFAX COUNTY*	5155250100D	03/01/1996	96–03–200A	2
3	VA	FAIRFAX COUNTY*	5155250100D	04/18/1996	96–03–216A	2
3	VA	FAIRFAX COUNTY*	5155250100D	05/07/1996	96–03–472A	2
3	VA	FAIRFAX COUNTY*	5155250100D	05/07/1996	96–03–472A	2
3	VA	FAIRFAX COUNTY*	5155250100D	06/03/1996	96–03–486A	2
3	VA	FAIRFAX COUNTY*	5155250100D	06/03/1996	96–03–486A	2
3	VA	FAIRFAX COUNTY*	5155250125D	03/14/1996	96–03–204A	2
3	VA	FAIRFAX COUNTY*	5155250150D	01/17/1996	96–03–108A	2
3	VA	FAIRFAX COUNTY*	5155250150D	04/16/1996	96–03–248A	2
3	VA	FAIRFAX COUNTY*	5155250150D	04/29/1996	96–03–384A	2
3	VA	FAIRFAX, CITY OF	5155240005B	04/22/1996	96–03–266A	2
3	VA	FAUQUIER COUNTY*	5100550355A	06/14/1996	95–03–388A	2
3	VA	FAUQUIER COUNTY*	5100550360A	01/23/1996	96–03–126A	2
3	VA	FAUQUIER COUNTY*	5100550360A	04/29/1996	96–03–366A	2
3	VA	FRANKLIN COUNTY*	5100610210A	02/29/1996	96–03–136A	2
3	VA	FRANKLIN COUNTY*	5100610210A	06/14/1996	96–03–418A	2
3	VA	FRONT ROYAL, TOWN OF	5101670002B	05/13/1996	96–03–310A	2
3	VA	LOUDOUN COUNTY*	5100900020C	06/13/1996	96–03–055P	6
3	VA	LOUDOUN COUNTY*	5100900105C	06/14/1996	96–03–390A	1
3	VA	LOUDOUN COUNTY*	5100900115C	02/27/1996	96–03–132A	2
3	VA	MIDDLESEX COUNTY*	5100980025B	01/11/1996	96–03–120A	2
3	VA	NEWPORT NEWS, CITY OF	5101030012A	01/17/1996	96–03–050A	2
3	VA	PRINCE WILLIAM COUNTY*	51153C0301D	03/26/1996	96–03–274A	2
3	VA	RICHMOND, CITY OF	5101290010B	01/16/1996	96–03–013P	5
3	VA	RICHMOND, CITY OF	5101290020B	01/16/1996	96–03–013P	5
3	VA	ROANOKE COUNTY*	51161C0037D	01/30/1996	96–03–112A	2
3	VA	ROCKBRIDGE COUNTY*	5102050175B	01/24/1996	95–03–087R	8
3	VA	ROCKINGHAM COUNTY*	5101330022C	06/14/1996	96–03–382A	2
3	VA	SHENANDOAH COUNTY*	5101470200B	04/16/1996	96–03–378A	2
3	VA	SPOTSYLVANIA COUNTY*	5103080007B	03/04/1996	96–03–086A	2
3	VA	STAUNTON, CITY OF	5101550003C	06/26/1996	96–03–482A	2
3	VA	VIRGINIA BEACH, CITY OF	5155310008C	02/16/1996	96–03–066A	2
3	VA	VIRGINIA BEACH, CITY OF	5155310014D	03/12/1996	96–03–078A	2
3	VA	VIRGINIA BEACH, CITY OF	5155310026C	06/25/1996	96–03–456A	2
3	VA	VIRGINIA BEACH, CITY OF	5155310034D	05/07/1996	96–03–222A	2
3	VA	VIRGINIA BEACH, CITY OF	5155310038C	01/26/1996	96–03–190A	1
3	VA	VIRGINIA BEACH, CITY OF	5155310038C	05/03/1996	96–03–304A	1
3	VA	WAYNESBORO, CITY OF	5155320010B	04/09/1996	95–03–480A	2
3	VA	WOODSTOCK, TOWN OF	510150 B	01/31/1996	95–03–354A	2
3	WV	FRANKLIN, TOWN OF	5401540001C	03/20/1996	96–03–072A	1
3	WV	JACKSON COUNTY*	5400630125B	06/24/1996	96–03–332A	2
3	WV	LINCOLN COUNTY*	5400880076B	06/28/1996	96–03–184A	1
3	WV	LINCOLN COUNTY*	5400880077B	06/28/1996	96–03–184A	1
3	WV	LINCOLN COUNTY*	5400880092B	03/21/1996	96–03–080A	2

Region	State	Community name	Panel number	Effective date	Case No.	Determination
3	WV	MINERAL COUNTY*	5401290135A	02/09/1996	95–03–472A	2
3	WV	RIPLEY, CITY OF	5400640001D	04/23/1996	96–03–334A	2
3	WV	UPSHUR COUNTY*	5401980001B	03/28/1996	96–03–160A	2
3	WV	WOOD COUNTY*	5402130072A	01/11/1996	95–03–460A	2
4	AL	BIRMINGHAM, CITY OF	0101160047C	02/26/1996	962–064	2
4	AL	CALHOUN COUNTY*	0100130262C	02/28/1996	95–04–217P	5
4	AL	DECATUR, CITY OF	0101760015B	02/20/1996	96–04–366A	1
4	AL	DOTHAN, CITY OF	0101040023D	04/30/1996	962–249	2
4	AL	ELMORE COUNTY*	0104060155B	05/02/1996	963–011	2
4	AL	HUNTSVILLE, CITY OF	0101530050C	02/26/1996	962–083	2
4	AL	JEFFERSON COUNTY*	0102170183B	04/29/1996	96–04–566A	1
4	AL	JEFFERSON COUNTY*	0102170194B	03/29/1996	962–105	1
4	AL	JEFFERSON COUNTY*	0102170494B	04/09/1996	962–116	1
4	AL	MONTGOMERY COUNTY*	01101C0155F	06/03/1996	96–04–862A	1
4	AL	MONTGOMERY, CITY OF	01101C0130F	04/30/1996	962–268	2
4	AL	OXFORD, CITY OF	0100230001C	02/28/1996	95–04–217P	5
4	AL	OXFORD, CITY OF	0100230004C	02/28/1996	95–04–217P	5
4	AL	SHELBY COUNTY*	0101910050B	01/15/1996	95–04–269P	5
4	AL	SHELBY COUNTY*	0101910145B	02/27/1996	954–245	2
4	FL	ALACHUA COUNTY*	1200010259A	05/16/1996	963–030	2
4	FL	ALACHUA COUNTY*	1200010275A	01/24/1996	961–212	2
4	FL	ALACHUA COUNTY*	1200010575A	05/16/1996	963–053	2
4	FL	APOPKA, CITY OF	1201800005C	05/24/1996	963–134	2
4	FL	ATLANTIC BEACH, CITY OF	1200750001D	02/15/1996	962–033	2
4	FL	BAY COUNTY*	1200040230D	04/30/1996	962–264	2
4	FL	BREVARD COUNTY*	12009C0190F	06/10/1996	901–059A	1
4	FL	BREVARD COUNTY*	12009C0190F	04/05/1996	962–126	1
4	FL	BREVARD COUNTY*	12009C0190F	05/24/1996	963–038	1
4	FL	BREVARD COUNTY*	12009C0190F	05/22/1996	963–058	1
4	FL	BREVARD COUNTY*	12009C0260E	06/10/1996	96–04–618A	1
4	FL	BREVARD COUNTY*	12009C0260E	01/24/1996	961–259	1
4	FL	BREVARD COUNTY*	12009C0260E	03/27/1996	962–056	2
4	FL	BREVARD COUNTY*	12009C0260E	06/10/1996	963–037	1
4	FL	BREVARD COUNTY*	12009C0270E	02/16/1996	962–052	2
4	FL	BREVARD COUNTY*	12009C0270E	03/27/1996	962–061	1
4	FL	BREVARD COUNTY*	12009C0275E	04/24/1996	96–04–428A	1
4	FL	BREVARD COUNTY*	12009C0275E	01/23/1996	961–246	1
4	FL	BREVARD COUNTY*	12009C0275E	02/27/1996	962–044	1
4	FL	BREVARD COUNTY*	12009C0275E	03/27/1996	962–117	2
4	FL	BREVARD COUNTY*	12009C0290E	04/04/1996	962–224	1
4	FL	BREVARD COUNTY*	12009C0365E	01/19/1996	961–252	1
4	FL	BREVARD COUNTY*	12009C0365E	01/19/1996	961–253	1
4	FL	BREVARD COUNTY*	12009C0365E	01/19/1996	961–254	1
4	FL	BREVARD COUNTY*	12009C0365E	01/19/1996	961–255	1
4	FL	BREVARD COUNTY*	12009C0365E	01/19/1996	961–256	1
4	FL	BREVARD COUNTY*	12009C0365E	04/30/1996	963–043	1
4	FL	BREVARD COUNTY*	12009C0365E	04/30/1996	963–044	1
4	FL	BREVARD COUNTY*	12009C0365E	05/08/1996	963–045	1
4	FL	BREVARD COUNTY*	12009C0365E	05/08/1996	963–046	1
4	FL	BREVARD COUNTY*	12009C0365E	05/08/1996	963–047	1
4	FL	BREVARD COUNTY*	12009C0365E	05/08/1996	963–048	1
4	FL	BREVARD COUNTY*	12009C0365E	06/10/1996	963–160	1
4	FL	BREVARD COUNTY*	12009C0365E	06/10/1996	963–194	2
4	FL	BREVARD COUNTY*	12009C0430E	04/23/1996	96–04–614A	2
4	FL	BREVARD COUNTY*	12009C0430E	04/30/1996	962–266	2
4	FL	BREVARD COUNTY*	12009C0435E	06/10/1996	963–101	1
4	FL	BREVARD COUNTY*	12009C0435E	06/10/1996	963–102	1
4	FL	BREVARD COUNTY*	12009C0441E	05/24/1996	963–090	1
4	FL	BREVARD COUNTY*	12009C0605E	03/11/1996	961–257	2
4	FL	BREVARD COUNTY*	12009C0605E	04/08/1996	962–155	1
4	FL	BREVARD COUNTY*	12009C0605E	06/10/1996	963–103	1
4	FL	BREVARD COUNTY*	12009C0607F	05/28/1996	96–04–502A	1
4	FL	BROWARD COUNTY*	12011C0190F	01/17/1996	96–04–124A	1
4	FL	BROWARD COUNTY*	12011C0190F	04/09/1996	96–04–560A	1
4	FL	BROWARD COUNTY*	12011C0190F	06/04/1996	96–04–878A	1
4	FL	BROWARD COUNTY*	12011C0195F	04/15/1996	96–04–522A	1
4	FL	BROWARD COUNTY*	12011C0214F	03/11/1996	962–110	2
4	FL	BROWARD COUNTY*	12011C0285F	06/10/1996	96–04–908A	1
4	FL	BROWARD COUNTY*	12011C0285F	06/10/1996	96–04–910A	1
4	FL	CAPE CORAL, CITY OF	1250950020C	05/02/1996	962–245	1
4	FL	CAPE CORAL, CITY OF	1250950030C	05/31/1996	96–04–1084A	1
4	FL	CAPE CORAL, CITY OF	1250950030C	02/27/1996	96–04–524A	1
4	FL	CAPE CORAL, CITY OF	1250950030C	04/23/1996	96–04–872A	1

Region	State	Community name	Panel number	Effective date	Case No.	Determination
4	FL	CAPE CORAL, CITY OF	1250950030C	05/23/1996	96–04–898A	2
4	FL	CAPE CORAL, CITY OF	1250950040C	04/23/1996	96–04–872A	1
4	FL	CITRUS COUNTY*	1200630220B	03/27/1996	954–017	1
4	FL	CITRUS COUNTY*	1200630270B	02/16/1996	962–043	2
4	FL	CITRUS COUNTY*	1200630270B	03/11/1996	962–156	2
4	FL	CITRUS COUNTY*	1200630270B	05/22/1996	963–110	2
4	FL	CLAY COUNTY*	1200640065D	01/11/1996	96–04–018A	1
4	FL	CLAY COUNTY*	1200640065D	04/18/1996	96–04–528A	1
4	FL	CLAY COUNTY*	1200640070D	04/09/1996	962–177	1
4	FL	CLAY COUNTY*	1200640070D	04/09/1996	962–178	2
4	FL	CLAY COUNTY*	1200640120D	03/12/1996	962–034	1
4	FL	CLAY COUNTY*	1200640135D	01/31/1996	96–04–332A	1
4	FL	CLAY COUNTY*	1200640135D	01/26/1996	96–04–396A	1
4	FL	CLAY COUNTY*	1200640135D	02/28/1996	96–04–432A	1
4	FL	CLAY COUNTY*	1200640135D	05/06/1996	96–04–686A	2
4	FL	CLAY COUNTY*	1200640135D	01/23/1996	961–193	1
4	FL	CLAY COUNTY*	1200640135D	01/23/1996	961–240	1
4	FL	CLAY COUNTY*	1200640135D	01/23/1996	961–241	1
4	FL	CLAY COUNTY*	1200640135D	02/27/1996	962–053	1
4	FL	CLAY COUNTY*	1200640135D	06/07/1996	963–202	2
4	FL	CLAY COUNTY*	1200640140D	05/22/1996	963–108	2
4	FL	CLAY COUNTY*	1200640155D	04/03/1996	96–04–136A	2
4	FL	CLAY COUNTY*	1200640155D	04/05/1996	96–04–700A	1
4	FL	CLAY COUNTY*	1200640155D	05/29/1996	96–04–974A	1
4	FL	CLAY COUNTY*	1200640155D	03/11/1996	961–138	1
4	FL	CLAY COUNTY*	1200640350D	02/16/1996	954–206	2
4	FL	CLAY COUNTY*	1200640350D	03/12/1996	962–027	2
4	FL	CLAY COUNTY*	1200640350D	05/22/1996	963–107	2
4	FL	CLERMONT, CITY OF	1201330001B	04/09/1996	96–04–194A	2
4	FL	COLLIER COUNTY*	1200670605E	05/09/1996	963–032	1
4	FL	COLLIER COUNTY*	1200670605E	05/09/1996	963–033	1
4	FL	COLLIER COUNTY*	1200670605E	05/24/1996	963–131	2
4	FL	COLLIER COUNTY*	1200670605E	06/06/1996	963–156	1
4	FL	COLLIER COUNTY*	1200670605E	06/06/1996	963–157	1
4	FL	COLLIER COUNTY*	1200670605E	06/07/1996	963–158	2
4	FL	COLLIER COUNTY*	1200670605E	02/27/1996	L–962–104	1
4	FL	CORAL SPRINGS, CITY OF	12011C0085F	06/28/1996	96–04–1094A	1
4	FL	CORAL SPRINGS, CITY OF	12011C0115F	05/09/1996	96–04–742A	1
4	FL	DADE COUNTY*	12025C0075J	04/03/1996	96–04–456A	1
4	FL	DADE COUNTY*	12025C0075J	04/23/1996	96–04–550A	1
4	FL	DADE COUNTY*	12025C0075J	05/28/1996	96–04–856A	1
4	FL	DADE COUNTY*	12025C0075J	05/20/1996	96–04–864A	1
4	FL	DADE COUNTY*	12025C0080J	01/17/1996	96–04–210A	1
4	FL	DADE COUNTY*	12025C0080J	05/23/1996	96–04–496A	1
4	FL	DADE COUNTY*	12025C0080J	05/23/1996	96–04–546A	1
4	FL	DADE COUNTY*	12025C0080J	04/09/1996	96–04–804A	1
4	FL	DADE COUNTY*	12025C0255J	04/09/1996	96–04–516A	1
4	FL	DADE COUNTY*	12025C0265J	02/08/1996	96–04–156A	1
4	FL	DADE COUNTY*	12025C0265J	01/11/1996	96–04–218A	1
4	FL	DADE COUNTY*	12025C0265J	01/31/1996	96–04–274A	1
4	FL	DADE COUNTY*	12025C0265J	04/05/1996	96–04–276A	1
4	FL	DADE COUNTY*	12025C0265J	02/21/1996	96–04–376A	1
4	FL	DADE COUNTY*	12025C0265J	02/16/1996	96–04–378A	1
4	FL	DADE COUNTY*	12025C0265J	03/06/1996	96–04–438A	1
4	FL	DADE COUNTY*	12025C0265J	03/08/1996	96–04–508A	2
4	FL	DADE COUNTY*	12025C0265J	06/18/1996	96–04–530A	1
4	FL	DADE COUNTY*	12025C0265J	03/06/1996	96–04–562A	1
4	FL	DADE COUNTY*	12025C0265J	05/22/1996	96–04–786A	1
4	FL	DADE COUNTY*	12025C0265J	04/23/1996	96–04–792A	2
4	FL	DADE COUNTY*	12025C0265J	05/03/1996	96–04–860A	1
4	FL	DADE COUNTY*	12025C0265J	06/18/1996	962–258	1
4	FL	DADE COUNTY*	12025C0350J	06/07/1996	963–180	1
4	FL	DADE COUNTY*	12025C0357J	04/03/1996	96–04–282A	1
4	FL	DEBARY, CITY OF	1206720001F	06/21/1996	934–071A	2
4	FL	DUNEDIN, CITY OF	1251030009D	01/23/1996	961–042	2
4	FL	EUSTIS, CITY OF	1201340005B	01/23/1996	961–206	2
4	FL	GLADES COUNTY*	1200950305B	03/26/1996	954–300	2
4	FL	HERNANDO COUNTY*	1201100150B	01/23/1996	961–141	2
4	FL	HERNANDO COUNTY*	1201100150B	06/10/1996	963–128	1
4	FL	HERNANDO COUNTY*	1201100280B	02/27/1996	961–133	2
4	FL	HIALEAH GARDENS, CITY OF	12025C0075J	01/29/1996	96–04–266A	1
4	FL	HIALEAH GARDENS, CITY OF	12025C0075J	03/08/1996	96–04–346A	1
4	FL	HIALEAH, CITY OF	12025C0075J	01/31/1996	96–04–294A	1

Region	State	Community name	Panel number	Effective date	Case No.	Determination
4	FL	HIALEAH, CITY OF	12025C0090J	02/26/1996	962–063	2
4	FL	HILLSBORO BEACH, TOWN OF	12011C0117F	01/24/1996	95–04–403P	5
4	FL	HILLSBOROUGH COUNTY*	1201120045D	02/27/1996	L–962–108	2
4	FL	HILLSBOROUGH COUNTY*	1201120065D	02/21/1996	962–054	2
4	FL	HILLSBOROUGH COUNTY*	1201120090E	04/15/1996	95–04–1078C	1
4	FL	HILLSBOROUGH COUNTY*	1201120090E	02/13/1996	96–04–230A	1
4	FL	HILLSBOROUGH COUNTY*	1201120160C	01/11/1996	96–04–170A	1
4	FL	HILLSBOROUGH COUNTY*	1201120160C	02/01/1996	96–04–234A	1
4	FL	HILLSBOROUGH COUNTY*	1201120160C	01/31/1996	96–04–304A	1
4	FL	HILLSBOROUGH COUNTY*	1201120160C	01/22/1996	96–04–306A	1
4	FL	HILLSBOROUGH COUNTY*	1201120160C	02/02/1996	96–04–322A	1
4	FL	HILLSBOROUGH COUNTY*	1201120160C	03/12/1996	96–04–368A	1
4	FL	HILLSBOROUGH COUNTY*	1201120160C	04/15/1996	96–04–462A	1
4	FL	HILLSBOROUGH COUNTY*	1201120160C	04/29/1996	96–04–706A	1
4	FL	HILLSBOROUGH COUNTY*	1201120160C	05/13/1996	96–04–720A	1
4	FL	HILLSBOROUGH COUNTY*	1201120160C	05/08/1996	96–04–734A	1
4	FL	HILLSBOROUGH COUNTY*	1201120160C	04/30/1996	96–04–774A	1
4	FL	HILLSBOROUGH COUNTY*	1201120160C	04/23/1996	96–04–826A	1
4	FL	HILLSBOROUGH COUNTY*	1201120167C	03/22/1996	96–04–318A	1
4	FL	HILLSBOROUGH COUNTY*	1201120167C	06/18/1996	96–04–648A	1
4	FL	HILLSBOROUGH COUNTY*	1201120167C	05/02/1996	962–290	1
4	FL	HILLSBOROUGH COUNTY*	1201120167C	04/30/1996	963–052	1
4	FL	HILLSBOROUGH COUNTY*	1201120180F	05/15/1996	96–04–644A	1
4	FL	HILLSBOROUGH COUNTY*	1201120180F	01/22/1996	961–222	1
4	FL	HILLSBOROUGH COUNTY*	1201120180F	02/16/1996	962–009	2
4	FL	HILLSBOROUGH COUNTY*	1201120180F	06/21/1996	963–217	1
4	FL	HILLSBOROUGH COUNTY*	1201120185F	04/05/1996	962–130	1
4	FL	HILLSBOROUGH COUNTY*	1201120185F	06/21/1996	963–210	2
4	FL	HILLSBOROUGH COUNTY*	1201120190D	06/21/1996	96–04–1138A	1
4	FL	HILLSBOROUGH COUNTY*	1201120190D	03/04/1996	96–04–424A	1
4	FL	HILLSBOROUGH COUNTY*	1201120190D	04/02/1996	96–04–552A	1
4	FL	HILLSBOROUGH COUNTY*	1201120190D	04/02/1996	96–04–554A	1
4	FL	HILLSBOROUGH COUNTY*	1201120190D	04/23/1996	96–04–824A	1
4	FL	HILLSBOROUGH COUNTY*	1201120190D	05/01/1996	96–04–876A	1
4	FL	HILLSBOROUGH COUNTY*	1201120195D	04/15/1996	96–04–220C	2
4	FL	HILLSBOROUGH COUNTY*	1201120205D	02/28/1996	96–04–372A	1
4	FL	HILLSBOROUGH COUNTY*	1201120205D	04/09/1996	96–04–490A	1
4	FL	HILLSBOROUGH COUNTY*	1201120205D	05/15/1996	96–04–494A	1
4	FL	HILLSBOROUGH COUNTY*	1201120205D	04/23/1996	96–04–538A	1
4	FL	HILLSBOROUGH COUNTY*	1201120205D	05/13/1996	96–04–782A	1
4	FL	HILLSBOROUGH COUNTY*	1201120210E	04/04/1996	962–240	2
4	FL	HILLSBOROUGH COUNTY*	1201120210E	05/22/1996	963–113	2
4	FL	HILLSBOROUGH COUNTY*	1201120255C	04/18/1996	96–04–640A	1
4	FL	HILLSBOROUGH COUNTY*	1201120385E	03/12/1996	962–031	2
4	FL	HILLSBOROUGH COUNTY*	1201120386E	01/19/1996	961–132	2
4	FL	HILLSBOROUGH COUNTY*	1201120387E	03/27/1996	962–068	1
4	FL	HILLSBOROUGH COUNTY*	1201120387E	03/27/1996	962–069	1
4	FL	HILLSBOROUGH COUNTY*	1201120387E	03/27/1996	962–070	1
4	FL	HILLSBOROUGH COUNTY*	1201120387E	03/27/1996	962–071	1
4	FL	HILLSBOROUGH COUNTY*	1201120387E	03/27/1996	962–072	1
4	FL	HILLSBOROUGH COUNTY*	1201120387E	03/27/1996	962–073	1
4	FL	HILLSBOROUGH COUNTY*	1201120387E	04/08/1996	962–195	1
4	FL	HILLSBOROUGH COUNTY*	1201120387E	04/08/1996	962–196	1
4	FL	HILLSBOROUGH COUNTY*	1201120387E	04/09/1996	962–246	1
4	FL	HILLSBOROUGH COUNTY*	1201120387E	05/16/1996	963–027	1
4	FL	HILLSBOROUGH COUNTY*	1201120387E	05/16/1996	963–028	1
4	FL	HILLSBOROUGH COUNTY*	1201120387E	05/16/1996	963–029	1
4	FL	HILLSBOROUGH COUNTY*	1201120387E	05/22/1996	963–094	1
4	FL	HILLSBOROUGH COUNTY*	1201120387E	05/22/1996	963–099	1
4	FL	HILLSBOROUGH COUNTY*	1201120387E	06/10/1996	963–125	1
4	FL	HILLSBOROUGH COUNTY*	1201120387E	06/07/1996	963–170	1
4	FL	HILLSBOROUGH COUNTY*	1201120389D	03/27/1996	962–074	1
4	FL	HILLSBOROUGH COUNTY*	1201120389D	03/27/1996	962–082	2
4	FL	HILLSBOROUGH COUNTY*	1201120389D	05/22/1996	963–098	1
4	FL	HILLSBOROUGH COUNTY*	1201120415C	01/22/1996	961–204	1
4	FL	HILLSBOROUGH COUNTY*	1201120415C	01/23/1996	961–281	1
4	FL	HILLSBOROUGH COUNTY*	1201120415C	02/27/1996	962–016	2
4	FL	HILLSBOROUGH COUNTY*	1201120415C	03/12/1996	962–028	1
4	FL	HILLSBOROUGH COUNTY*	1201120415C	03/27/1996	962–075	1
4	FL	HILLSBOROUGH COUNTY*	1201120415C	04/09/1996	962–184	1
4	FL	HILLSBOROUGH COUNTY*	1201120415C	04/09/1996	962–185	1
4	FL	HILLSBOROUGH COUNTY*	1201120415C	04/09/1996	962–186	1
4	FL	HILLSBOROUGH COUNTY*	1201120415C	04/09/1996	962–187	1

Region	State	Community name	Panel number	Effective date	Case No.	Determination
4	FL	HILLSBOROUGH COUNTY*	1201120415C	04/09/1996	962–192	1
4	FL	HILLSBOROUGH COUNTY*	1201120415C	04/09/1996	962–193	1
4	FL	HILLSBOROUGH COUNTY*	1201120415C	04/08/1996	962–194	1
4	FL	HILLSBOROUGH COUNTY*	1201120415C	04/09/1996	962–241	2
4	FL	HILLSBOROUGH COUNTY*	1201120415C	04/09/1996	962–242	2
4	FL	HILLSBOROUGH COUNTY*	1201120415C	04/09/1996	962–255	1
4	FL	HILLSBOROUGH COUNTY*	1201120415C	05/16/1996	963–031	1
4	FL	HILLSBOROUGH COUNTY*	1201120425C	06/04/1996	96–04–158A	1
4	FL	HILLSBOROUGH COUNTY*	1201120425C	02/20/1996	96–04–358A	1
4	FL	HILLSBOROUGH COUNTY*	1201120494C	01/19/1996	96–04–268A	1
4	FL	HILLSBOROUGH COUNTY*	1201120494C	05/09/1996	96–04–780A	1
4	FL	HOLLYWOOD, CITY OF	12011C0304F	04/23/1996	96–04–696A	2
4	FL	HOLLYWOOD, CITY OF	12011C0312F	04/04/1996	962–146	2
4	FL	HOMESTEAD, CITY OF	12025C0365J	01/11/1996	95–04–1116A	1
4	FL	HOMESTEAD, CITY OF	12025C0455J	01/11/1996	95–04–1116A	1
4	FL	INDIAN RIVER COUNTY*	12061C0168E	02/15/1996	95–04–1126A	1
4	FL	INDIAN RIVER COUNTY*	12061C0169F	05/13/1996	96–04–526P	6
4	FL	INGLIS, TOWN OF	1205860005B	03/11/1996	954–248	2
4	FL	JACKSONVILLE, CITY OF	1200770150E	03/19/1996	94–04–938P	5
4	FL	JACKSONVILLE, CITY OF	1200770150E	02/13/1996	96–04–020A	1
4	FL	JACKSONVILLE, CITY OF	1200770164E	04/04/1996	962–238	2
4	FL	JACKSONVILLE, CITY OF	1200770169E	03/13/1996	961–076	2
4	FL	JACKSONVILLE, CITY OF	1200770208E	01/29/1996	96–04–308A	1
4	FL	JACKSONVILLE, CITY OF	1200770209E	03/26/1996	962–062	2
4	FL	JACKSONVILLE, CITY OF	1200770229E	05/21/1996	96–04–726A	1
4	FL	JACKSONVILLE, CITY OF	1200770229E	05/08/1996	963–072	2
4	FL	JACKSONVILLE, CITY OF	1200770234E	03/29/1996	961–210	1
4	FL	JACKSONVILLE, CITY OF	1200770236E	04/08/1996	96–04–045P	5
4	FL	JACKSONVILLE, CITY OF	1200770236E	03/11/1996	962–132	2
4	FL	JACKSONVILLE, CITY OF	1200770239E	01/25/1996	95–04–393P	5
4	FL	JACKSONVILLE, CITY OF	1200770243E	04/01/1996	96–04–258C	1
4	FL	JACKSONVILLE, CITY OF	1200770243E	04/01/1996	96–04–260C	1
4	FL	KISSIMMEE, CITY OF	1201900005B	05/15/1996	95–04–910A	1
4	FL	KISSIMMEE, CITY OF	1201900005B	05/22/1996	96–04–818A	2
4	FL	KISSIMMEE, CITY OF	1201900005B	05/15/1996	96–04–846A	1
4	FL	LAKE COUNTY*	1204210050B	03/18/1996	96–04–039P	5
4	FL	LAKE COUNTY*	1204210100B	03/27/1996	962–035	1
4	FL	LAKE COUNTY*	1204210125B	03/26/1996	962–113	2
4	FL	LAKE COUNTY*	1204210125B	06/10/1996	963–004	1
4	FL	LAKE COUNTY*	1204210125B	02/27/1996	L–962–106	2
4	FL	LAKE COUNTY*	1204210200B	06/06/1996	96–04–536A	2
4	FL	LAKE COUNTY*	1204210200B	04/04/1996	961–201	2
4	FL	LAKE COUNTY*	1204210200B	03/12/1996	962–019	1
4	FL	LAKE COUNTY*	1204210200B	03/27/1996	962–118	2
4	FL	LAKE COUNTY*	1204210225B	04/08/1996	962–095	2
4	FL	LAKE MARY, CITY OF	12117C0040E	01/17/1996	96–04–176A	1
4	FL	LAKE MARY, CITY OF	12117C0040E	06/24/1996	96–04–728A	1
4	FL	LAUDERDALE LAKES, CITY OF	12011C0204F	03/29/1996	962–097	2
4	FL	LAUDERHILL, CITY OF	12011C0205F	01/23/1996	961–198	2
4	FL	LEE COUNTY*	1251240075D	05/22/1996	962–144	2
4	FL	LEE COUNTY*	1251240200C	01/23/1996	961–245	1
4	FL	LEE COUNTY*	1251240250B	06/14/1996	96–04–794A	1
4	FL	LEE COUNTY*	1251240250B	02/27/1996	L–961–280	2
4	FL	LEE COUNTY*	1251240325C	03/06/1996	96–04–336A	1
4	FL	LEON COUNTY*	1201430090A	03/29/1996	962–190	2
4	FL	LEON COUNTY*	1201430185A	04/09/1996	962–180	2
4	FL	LIVE OAK, CITY OF	120334 B	03/25/1996	96–04–178A	2
4	FL	LONGWOOD, CITY OF	12117C0130E	04/09/1996	962–088	2
4	FL	MALABAR, TOWN OF	12009C0540F	05/02/1996	963–024	2
4	FL	MALABAR, TOWN OF	12009C0605E	03/27/1996	962–059	1
4	FL	MANATEE COUNTY*	1201530327C	04/04/1996	962–214	2
4	FL	MANATEE COUNTY*	1201530354C	05/20/1996	96–04–646A	1
4	FL	MANATEE COUNTY*	1201530365C	05/21/1996	96–04–324A	2
4	FL	MANATEE COUNTY*	1201530370C	05/21/1996	96–04–324A	2
4	FL	MARGATE, CITY OF	12011C0115F	01/11/1996	96–04–320A	1
4	FL	MARGATE, CITY OF	12011C0115F	02/21/1996	96–04–362A	1
4	FL	MARION COUNTY*	1201600300B	03/27/1996	961–225	2
4	FL	MELBOURNE, CITY OF	12009C0441E	05/24/1996	963–086	2
4	FL	MELBOURNE, CITY OF	12009C0442E	02/16/1996	962–026	1
4	FL	MINNEOLA, TOWN OF	1204120001A	06/21/1996	963–206	2
4	FL	MIRAMAR, CITY OF	12011C0315F	02/22/1996	96–04–038A	1
4	FL	MIRAMAR, CITY OF	12011C0315F	01/31/1996	96–04–172A	1
4	FL	MIRAMAR, CITY OF	12011C0315F	03/18/1996	96–04–360A	1

Region	State	Community name	Panel number	Effective date	Case No.	Determination
4	FL	MIRAMAR, CITY OF	12011C0315F	04/19/1996	96–04–518A	1
4	FL	MIRAMAR, CITY OF	12011C0315F	06/10/1996	96–04–762A	1
4	FL	MIRAMAR, CITY OF	12011C0315F	05/13/1996	96–04–890A	1
4	FL	NASSAU COUNTY*	1201700239C	01/22/1996	961–214	2
4	FL	NASSAU COUNTY*	1201700239C	01/23/1996	961–265	2
4	FL	NEPTUNE BEACH, CITY OF	1200790001D	03/27/1996	962–176	1
4	FL	NEPTUNE BEACH, CITY OF	1200790001D	04/18/1996	962–259	1
4	FL	NICEVILLE, CITY OF	1203380005B	03/11/1996	962–022	1
4	FL	NORTH LAUDERDALE, CITY OF	12011C0205F	04/09/1996	96–04–382A	1
4	FL	OKALOOSA COUNTY*	1201730210D	02/16/1996	962–018	1
4	FL	OKALOOSA COUNTY*	1201730210D	04/08/1996	962–158	1
4	FL	OKEECHOBEE COUNTY*	1201770125B	06/19/1996	963–063	1
4	FL	OKEECHOBEE COUNTY*	1201770200B	05/22/1996	963–065	1
4	FL	OKEECHOBEE COUNTY*	1201770230B	05/03/1996	96–04–486A	1
4	FL	OKEECHOBEE COUNTY*	1201770235B	02/27/1996	961–288	1
4	FL	OLDSMAR, CITY OF	1202500003B	01/19/1996	96–04–242A	1
4	FL	OLDSMAR, CITY OF	1202500003B	03/08/1996	96–04–422A	1
4	FL	OLDSMAR, CITY OF	1202500003B	05/20/1996	96–04–764A	1
4	FL	ORANGE COUNTY*	1201790100B	04/09/1996	962–244	1
4	FL	ORANGE COUNTY*	1201790125D	06/17/1996	95–04–1122A	1
4	FL	ORANGE COUNTY*	1201790125D	04/01/1996	96–04–330A	1
4	FL	ORANGE COUNTY*	1201790175C	01/11/1996	95–04–1136A	1
4	FL	ORANGE COUNTY*	1201790175C	04/23/1996	96–04–636A	1
4	FL	ORANGE COUNTY*	1201790175C	06/14/1996	96–04–852A	1
4	FL	ORANGE COUNTY*	1201790175C	06/06/1996	963–167	1
4	FL	ORANGE COUNTY*	1201790200D	05/03/1996	96–04–712A	1
4	FL	ORANGE COUNTY*	1201790200D	02/16/1996	962–021	1
4	FL	ORANGE COUNTY*	1201790200D	03/11/1996	962–153	1
4	FL	ORANGE COUNTY*	1201790200D	06/07/1996	963–066	2
4	FL	ORANGE COUNTY*	1201790200D	06/06/1996	963–191	2
4	FL	ORANGE COUNTY*	1201790200D	06/21/1996	963–216	1
4	FL	ORANGE COUNTY*	1201790225C	03/11/1996	962–041	1
4	FL	ORANGE COUNTY*	1201790225C	03/29/1996	962–100	1
4	FL	ORANGE COUNTY*	1201790225C	04/09/1996	962–216	1
4	FL	ORANGE COUNTY*	1201790225C	06/06/1996	962–236	2
4	FL	ORANGE COUNTY*	1201790225C	04/04/1996	962–248	2
4	FL	ORANGE COUNTY*	1201790225C	06/06/1996	963–105	1
4	FL	ORANGE COUNTY*	1201790250D	02/09/1996	96–04–011A	1
4	FL	ORANGE COUNTY*	1201790250D	05/17/1996	96–04–474A	1
4	FL	ORANGE COUNTY*	1201790250D	06/11/1996	96–04–514P	6
4	FL	ORANGE COUNTY*	1201790250D	05/20/1996	96–04–668A	1
4	FL	ORANGE COUNTY*	1201790250D	01/23/1996	961–081	1
4	FL	ORANGE COUNTY*	1201790250D	01/23/1996	961–238	1
4	FL	ORANGE COUNTY*	1201790250D	02/27/1996	962–012	1
4	FL	ORANGE COUNTY*	1201790250D	02/16/1996	962–037	1
4	FL	ORANGE COUNTY*	1201790250D	04/04/1996	962–151	1
4	FL	ORANGE COUNTY*	1201790250D	05/24/1996	963–012	1
4	FL	ORANGE COUNTY*	1201790250D	06/06/1996	963–078	1
4	FL	ORANGE COUNTY*	1201790250D	06/06/1996	963–100	1
4	FL	ORANGE COUNTY*	1201790250D	06/06/1996	963–124	2
4	FL	ORANGE COUNTY*	1201790250D	06/19/1996	963–150	1
4	FL	ORANGE COUNTY*	1201790250D	06/19/1996	963–151	1
4	FL	ORANGE COUNTY*	1201790250D	06/19/1996	963–152	1
4	FL	ORANGE COUNTY*	1201790250D	06/19/1996	963–179	1
4	FL	ORANGE COUNTY*	1201790350C	03/29/1996	962–183	1
4	FL	ORANGE COUNTY*	1201790375D	02/01/1996	95–04–1022A	1
4	FL	ORANGE COUNTY*	1201790375D	01/11/1996	96–04–190A	1
4	FL	ORANGE COUNTY*	1201790375D	05/31/1996	96–04–602A	1
4	FL	ORANGE COUNTY*	1201790375D	05/31/1996	96–04–702A	1
4	FL	ORANGE COUNTY*	1201790375D	01/23/1996	961–266	1
4	FL	ORANGE COUNTY*	1201790375D	02/27/1996	962–042	1
4	FL	ORANGE COUNTY*	1201790375D	05/08/1996	963–076	1
4	FL	ORANGE COUNTY*	1201790400C	06/10/1996	963–185	2
4	FL	ORANGE COUNTY*	1201790525B	02/22/1996	96–04–154A	1
4	FL	ORANGE COUNTY*	1201790525B	06/20/1996	96–04–904A	1
4	FL	OSCEOLA COUNTY*	1201890025B	06/10/1996	96–04–556A	1
4	FL	OSCEOLA COUNTY*	1201890025B	06/10/1996	963–111	1
4	FL	OSCEOLA COUNTY*	1201890030B	04/23/1996	95–04–908A	1
4	FL	OSCEOLA COUNTY*	1201890040B	01/30/1996	96–04–022A	1
4	FL	OSCEOLA COUNTY*	1201890045B	03/01/1996	96–04–228A	1
4	FL	OSCEOLA COUNTY*	1201890075B	02/16/1996	961–239	1
4	FL	OSCEOLA COUNTY*	1201890140B	04/29/1996	962–166	2
4	FL	OVIEDO, CITY OF	12117C0170E	01/11/1996	96–04–216A	1

Region	State	Community name	Panel number	Effective date	Case No.	Determination
4	FL	OVIEDO, CITY OF	12117C0170E	01/19/1996	96–04–256A	1
4	FL	OVIEDO, CITY OF	12117C0170E	02/20/1996	96–04–468A	1
4	FL	OVIEDO, CITY OF	12117C0170E	04/22/1996	96–04–666A	1
4	FL	OVIEDO, CITY OF	12117C0170E	02/27/1996	L–962–098	1
4	FL	PALM BAY, CITY OF	12009C0580E	04/17/1996	962–262	1
4	FL	PALM BAY, CITY OF	12009C0585E	01/23/1996	961–194	2
4	FL	PALM BEACH COUNTY*	1201920102B	01/19/1996	953–170	2
4	FL	PALM BEACH COUNTY*	1201920155B	03/11/1996	962–123	2
4	FL	PALM BEACH COUNTY*	1201920220B	04/04/1996	953–109	1
4	FL	PALM BEACH COUNTY*	1201920220B	03/27/1996	953–259	2
4	FL	PALM BEACH COUNTY*	1201920235B	01/11/1996	95–04–1056A	1
4	FL	PALM BEACH COUNTY*	1201920240B	06/18/1996	96–04–532A	1
4	FL	PALM BEACH GARDENS, CITY OF	1202210002B	06/21/1996	962–252	2
4	FL	PANAMA CITY BEACH, CITY OF	1200130005C	01/23/1996	961–196	2
4	FL	PANAMA CITY BEACH, CITY OF	1200130005C	03/27/1996	962–079	2
4	FL	PASCO COUNTY*	1202300185D	04/09/1996	96–04–488A	2
4	FL	PASCO COUNTY*	1202300187C	04/18/1996	962–260	2
4	FL	PASCO COUNTY*	1202300195D	03/13/1996	961–191	2
4	FL	PASCO COUNTY*	1202300195D	04/30/1996	961–220	1
4	FL	PASCO COUNTY*	1202300195D	04/09/1996	962–017	2
4	FL	PASCO COUNTY*	1202300195D	06/10/1996	963–186	2
4	FL	PASCO COUNTY*	1202300250E	03/05/1996	95–04–363P	5
4	FL	PASCO COUNTY*	1202300280C	04/16/1996	96–04–520A	1
4	FL	PASCO COUNTY*	1202300352C	04/08/1996	962–103	2
4	FL	PASCO COUNTY*	1202300353C	02/29/1996	96–04–047P	5
4	FL	PASCO COUNTY*	1202300354D	02/29/1996	96–04–047P	5
4	FL	PASCO COUNTY*	1202300360D	01/31/1996	96–04–314A	1
4	FL	PASCO COUNTY*	1202300360D	03/18/1996	96–04–464A	1
4	FL	PASCO COUNTY*	1202300360D	05/15/1996	96–04–638A	1
4	FL	PASCO COUNTY*	1202300360D	06/14/1996	96–04–650A	1
4	FL	PASCO COUNTY*	1202300360D	06/06/1996	96–04–912A	1
4	FL	PASCO COUNTY*	1202300360D	05/22/1996	963–017	1
4	FL	PASCO COUNTY*	1202300362D	02/21/1996	961–223	2
4	FL	PASCO COUNTY*	1202300362D	04/04/1996	962–142	1
4	FL	PASCO COUNTY*	1202300370D	01/23/1996	954–101	1
4	FL	PASCO COUNTY*	1202300370D	01/23/1996	961–227	1
4	FL	PASCO COUNTY*	1202300370D	01/23/1996	961–228	1
4	FL	PASCO COUNTY*	1202300370D	02/26/1996	962–093	1
4	FL	PASCO COUNTY*	1202300370D	05/08/1996	963–106	1
4	FL	PASCO COUNTY*	1202300410E	03/05/1996	95–04–363P	5
4	FL	PASCO COUNTY*	1202300425E	04/24/1996	96–04–386A	1
4	FL	PASCO COUNTY*	1202300425E	05/01/1996	96–04–654A	1
4	FL	PASCO COUNTY*	1202300425E	03/13/1996	961–136	1
4	FL	PASCO COUNTY*	1202300425E	03/11/1996	961–137	1
4	FL	PASCO COUNTY*	1202300425E	04/09/1996	962–181	2
4	FL	PASCO COUNTY*	1202300425E	05/24/1996	962–243	2
4	FL	PASCO COUNTY*	1202300425E	05/24/1996	962–284	2
4	FL	PASCO COUNTY*	1202300425E	05/24/1996	962–285	2
4	FL	PASCO COUNTY*	1202300425E	05/24/1996	963–041	1
4	FL	PASCO COUNTY*	1202300425E	06/10/1996	963–042	1
4	FL	PASCO COUNTY*	1202300425E	06/19/1996	963–159	2
4	FL	PASCO COUNTY*	1202300430E	02/21/1996	95–04–286A	2
4	FL	PASCO COUNTY*	1202300450E	01/19/1996	95–04–1070A	1
4	FL	PASCO COUNTY*	1202300450E	01/11/1996	96–04–224A	1
4	FL	PASCO COUNTY*	1202300450E	03/21/1996	96–04–284A	1
4	FL	PASCO COUNTY*	1202300450E	04/10/1996	96–04–292A	1
4	FL	PASCO COUNTY*	1202300450E	03/08/1996	96–04–380A	2
4	FL	PASCO COUNTY*	1202300450E	03/08/1996	96–04–406A	1
4	FL	PASCO COUNTY*	1202300450E	02/16/1996	961–131	1
4	FL	PASCO COUNTY*	1202300450E	03/27/1996	962–003	1
4	FL	PASCO COUNTY*	1202300455D	03/05/1996	95–04–363P	5
4	FL	PINELLAS COUNTY*	1251390036C	01/23/1996	961–202	1
4	FL	PINELLAS COUNTY*	1251390036C	02/21/1996	962–014	1
4	FL	PINELLAS COUNTY*	1251390036C	02/26/1996	962–080	1
4	FL	PINELLAS COUNTY*	1251390036C	02/26/1996	962–112	1
4	FL	PINELLAS COUNTY*	1251390039C	04/04/1996	962–150	1
4	FL	PINELLAS COUNTY*	1251390043C	04/08/1996	96–04–660A	2
4	FL	PINELLAS COUNTY*	1251390043C	04/09/1996	962–057	1
4	FL	PINELLAS COUNTY*	1251390077C	03/12/1996	95–04–1034A	1
4	FL	PINELLAS COUNTY*	1251390079C	06/20/1996	96–04–1058A	1
4	FL	PINELLAS COUNTY*	1251390079C	01/23/1996	96–04–300A	1
4	FL	PINELLAS COUNTY*	1251390079C	02/21/1996	96–04–334A	1
4	FL	PINELLAS COUNTY*	1251390079C	04/01/1996	96–04–482A	1

Region	State	Community name	Panel number	Effective date	Case No.	Determination
4	FL	PINELLAS COUNTY*	1251390079C	04/18/1996	96–04–692A	1
4	FL	PINELLAS COUNTY*	1251390079C	04/30/1996	96–04–838A	1
4	FL	PINELLAS COUNTY*	1251390079C	06/04/1996	96–04–866A	1
4	FL	PINELLAS COUNTY*	1251390079C	04/30/1996	961–218	1
4	FL	PINELLAS COUNTY*	1251390081C	06/24/1996	96–04–1102A	1
4	FL	PINELLAS COUNTY*	1251390081C	01/11/1996	96–04–150A	1
4	FL	PINELLAS COUNTY*	1251390081C	06/24/1996	96–04–848A	1
4	FL	PINELLAS COUNTY*	1251390081C	06/24/1996	96–04–954A	1
4	FL	PINELLAS COUNTY*	1251390081C	06/24/1996	96–04–960A	1
4	FL	PINELLAS COUNTY*	1251390081C	06/24/1996	96–04–962A	1
4	FL	PINELLAS COUNTY*	1251390081C	06/24/1996	96–04–970A	1
4	FL	PLANTATION, CITY OF	12011C0195F	03/11/1996	962–121	1
4	FL	PLANTATION, CITY OF	12011C0195F	03/11/1996	962–122	1
4	FL	PLANTATION, CITY OF	12011C0215F	04/03/1996	96–04–436A	1
4	FL	POLK COUNTY*	1202610275B	02/28/1996	954–042	2
4	FL	POLK COUNTY*	1202610305B	04/17/1996	962–267	2
4	FL	POLK COUNTY*	1202610350B	03/22/1996	962–114	2
4	FL	POLK COUNTY*	1202610350B	05/24/1996	963–132	2
4	FL	POLK COUNTY*	1202610400B	06/12/1996	96–04–254A	1
4	FL	POLK COUNTY*	1202610480D	04/09/1996	96–04–005P	6
4	FL	POLK COUNTY*	1202610480D	05/08/1996	962–251	2
4	FL	POLK COUNTY*	1202610550E	01/24/1996	L–961–075A	2
4	FL	PORT ORANGE, CITY OF	1203130005C	04/22/1996	96–04–714A	1
4	FL	PORT ST. LUCIE, CITY OF	12111C0290F	01/19/1996	961–080	2
4	FL	PORT ST. LUCIE, CITY OF	12111C0290F	05/02/1996	963–007	2
4	FL	PORT ST. LUCIE, CITY OF	12111C0295F	05/22/1996	963–118	1
4	FL	ROCKLEDGE, CITY OF	12009C0365E	04/08/1996	952–210	1
4	FL	ROCKLEDGE, CITY OF	12009C0365E	04/08/1996	952–237	1
4	FL	ROCKLEDGE, CITY OF	12009C0365E	04/08/1996	952–238	1
4	FL	ROCKLEDGE, CITY OF	12009C0365E	04/09/1996	952–239	1
4	FL	ROCKLEDGE, CITY OF	12009C0365E	04/08/1996	952–245	1
4	FL	ROCKLEDGE, CITY OF	12009C0365E	04/09/1996	952–246	1
4	FL	ROCKLEDGE, CITY OF	12009C0365E	04/08/1996	952–258	1
4	FL	ROCKLEDGE, CITY OF	12009C0365E	04/09/1996	952–259	1
4	FL	ROCKLEDGE, CITY OF	12009C0365E	04/09/1996	952–261	1
4	FL	SANFORD, CITY OF	12117C0040E	03/08/1996	96–04–129P	6
4	FL	SANFORD, CITY OF	12117C0040E	05/20/1996	96–04–724A	2
4	FL	SARASOTA COUNTY*	1251440151D	03/01/1996	96–04–384A	1
4	FL	SARASOTA COUNTY*	1251440154E	03/06/1996	95–04–962A	1
4	FL	SARASOTA COUNTY*	1251440236D	05/08/1996	963–067	2
4	FL	SARASOTA COUNTY*	1251440329D	01/19/1996	961–221	2
4	FL	SARASOTA COUNTY*	1251440329D	05/24/1996	963–130	1
4	FL	SARASOTA COUNTY*	1251440432D	02/27/1996	L–962–101	1
4	FL	SEMINOLE COUNTY*	12117C0020E	05/28/1996	96–04–740A	1
4	FL	SEMINOLE COUNTY*	12117C0020E	05/07/1996	962–257	2
4	FL	SEMINOLE COUNTY*	12117C0040E	03/08/1996	96–04–129P	6
4	FL	SEMINOLE COUNTY*	12117C0040E	05/28/1996	96–04–740A	1
4	FL	SEMINOLE COUNTY*	12117C0110E	03/11/1996	L–902–104A	2
4	FL	SEMINOLE COUNTY*	12117C0120E	04/11/1996	96–04–664A	2
4	FL	SEMINOLE COUNTY*	12117C0130E	01/17/1996	96–04–132A	1
4	FL	SEMINOLE COUNTY*	12117C0130E	03/11/1996	L–943–092A	2
4	FL	SEMINOLE COUNTY*	12117C0145E	03/06/1996	96–04–046A	1
4	FL	SEMINOLE COUNTY*	12117C0145E	01/31/1996	96–04–048A	1
4	FL	SEMINOLE COUNTY*	12117C0145E	02/16/1996	961–017	2
4	FL	SEMINOLE COUNTY*	12117C0145E	03/27/1996	962–065	2
4	FL	SEMINOLE COUNTY*	12117C0145E	05/22/1996	963–062	2
4	FL	ST. JOHNS COUNTY*	1251470080D	02/27/1996	962–049	2
4	FL	ST. JOHNS COUNTY*	1251470183D	03/29/1996	954–019A	2
4	FL	ST. PETERSBURG, CITY OF	1251480034C	01/19/1996	95–04–299P	5
4	FL	SUMTER COUNTY*	1202960075B	06/18/1996	96–04–976A	1
4	FL	SUMTER COUNTY*	1202960075B	06/19/1996	963–162	1
4	FL	SUMTER COUNTY*	1202960150B	02/16/1996	961–030	2
4	FL	SUNRISE, CITY OF	12011C0205F	05/23/1996	96–04–784A	1
4	FL	TALLAHASSEE, CITY OF	1201440015C	02/15/1996	961–167	2
4	FL	TALLAHASSEE, CITY OF	1201440020C	04/09/1996	962–050	2
4	FL	TAMARAC, CITY OF	12011C0185F	01/11/1996	96–04–104A	1
4	FL	TAMARAC, CITY OF	12011C0185F	02/13/1996	96–04–238A	1
4	FL	TAMARAC, CITY OF	12011C0185F	04/05/1996	96–04–642A	1
4	FL	TAMARAC, CITY OF	12011C0205F	02/13/1996	96–04–238A	1
4	FL	TAMARAC, CITY OF	12011C0205F	05/23/1996	96–04–802A	1
4	FL	TAMARAC, CITY OF	12011C0205F	06/20/1996	96–04–946A	1
4	FL	TITUSVILLE, CITY OF	12009C0180E	05/21/1996	96–04–596A	2
4	FL	TITUSVILLE, CITY OF	12009C0180E	05/24/1996	963–136	1

Region	State	Community name	Panel number	Effective date	Case No.	Determination
4	FL	UNION COUNTY*	1204220250B	05/08/1996	962–223	2
4	FL	VALPARAISO, CITY OF	1201760005C	03/11/1996	962–138	2
4	FL	VENICE, CITY OF	1251540005D	03/18/1996	96–04–578A	2
4	FL	VOLUSIA COUNTY*	1251550165E	02/02/1996	96–04–302A	1
4	FL	VOLUSIA COUNTY*	1251550408E	04/23/1996	96–04–460A	1
4	FL	VOLUSIA COUNTY*	1251550440E	05/02/1996	962–281	1
4	FL	VOLUSIA COUNTY*	1251550440E	06/21/1996	963–178	2
4	FL	WEST MELBOURNE, CITY OF	12009C0502E	04/16/1996	96–04–114A	2
4	FL	WEST MELBOURNE, CITY OF	12009C0504E	04/16/1996	96–04–114A	2
4	GA	ALBANY, CITY OF	1300750015C	01/22/1996	961–231	2
4	GA	ATLANTA, CITY OF	1351570017C	01/22/1996	961–188	2
4	GA	BALDWIN COUNTY*	1300050075B	06/04/1996	96–04–608A	2
4	GA	BALDWIN COUNTY*	1300050075B	06/10/1996	963–209	2
4	GA	BRYAN COUNTY*	1300160080A	03/19/1996	95–04–323P	5
4	GA	BRYAN COUNTY*	1300160080A	03/19/1996	95–04–323P	5
4	GA	BRYAN COUNTY*	1300160085A	03/19/1996	95–04–323P	5
4	GA	BRYAN COUNTY*	1300160085A	03/19/1996	95–04–323P	5
4	GA	BRYAN COUNTY*	1300160090A	03/19/1996	95–04–323P	5
4	GA	BRYAN COUNTY*	1300160095A	03/19/1996	95–04–323P	5
4	GA	BRYAN COUNTY*	1300160160A	03/19/1996	95–04–323P	5
4	GA	BURKE COUNTY*	1300220125B	05/02/1996	96–04–113P	6
4	GA	CEDARTOWN, CITY OF	1301530001C	05/22/1996	963–059	2
4	GA	CHATHAM COUNTY*	1300300025C	04/03/1996	95–04–325P	5
4	GA	CHATHAM COUNTY*	1300300075C	04/03/1996	95–04–325P	5
4	GA	CHATHAM COUNTY*	1300300080C	03/07/1996	96–04–338A	2
4	GA	CLAYTON COUNTY*	1300410015C	03/27/1996	962–078	2
4	GA	COBB COUNTY*	13067C0010F	04/04/1996	962–161	2
4	GA	COBB COUNTY*	13067C0015F	02/13/1996	96–04–108A	2
4	GA	COBB COUNTY*	13067C0015F	03/29/1996	962–005	2
4	GA	COBB COUNTY*	13067C0025F	05/24/1996	963–054	1
4	GA	COBB COUNTY*	13067C0030F	05/22/1996	962–198	2
4	GA	COBB COUNTY*	13067C0030F	04/17/1996	962–222	2
4	GA	COBB COUNTY*	13067C0035F	03/29/1996	962–107	2
4	GA	COBB COUNTY*	13067C0035F	03/13/1996	962–162	2
4	GA	COBB COUNTY*	13067C0035F	05/22/1996	963–168	2
4	GA	COBB COUNTY*	13067C0040F	04/08/1996	962–159	2
4	GA	COBB COUNTY*	13067C0040F	05/22/1996	962–291	2
4	GA	COBB COUNTY*	13067C0040F	05/16/1996	963–006	2
4	GA	COBB COUNTY*	13067C0045F	01/24/1996	954–252	2
4	GA	COBB COUNTY*	13067C0055F	03/27/1996	951–173	2
4	GA	COBB COUNTY*	13067C0055F	05/08/1996	963–064	1
4	GA	COBB COUNTY*	13067C0055F	06/06/1996	963–135	1
4	GA	COBB COUNTY*	13067C0065F	06/21/1996	963–203	2
4	GA	COBB COUNTY*	13067C0070F	03/11/1996	954–239	2
4	GA	COBB COUNTY*	13067C0070F	01/22/1996	961–208	2
4	GA	COBB COUNTY*	13067C0070F	06/10/1996	963–177	2
4	GA	COBB COUNTY*	13067C0075F	04/04/1996	863–021A	2
4	GA	COBB COUNTY*	13067C0075F	01/23/1996	961–251	1
4	GA	COBB COUNTY*	13067C0075F	05/14/1996	963–173	2
4	GA	COBB COUNTY*	13067C0075F	06/05/1996	963–175	2
4	GA	COBB COUNTY*	13067C0085F	01/22/1996	961–235	2
4	GA	COBB COUNTY*	13067C0085F	05/08/1996	962–250	2
4	GA	COLUMBUS, CITY OF	1351580050D	01/23/1996	961–244	2
4	GA	COLUMBUS, CITY OF	1351580050D	03/11/1996	962–109	2
4	GA	COLUMBUS, CITY OF	1351580050D	03/12/1996	962–149	2
4	GA	DALTON, CITY OF	1301940005C	02/07/1996	96–04–098A	1
4	GA	DEKALB COUNTY*	1300650004E	01/24/1996	872–044A	2
4	GA	DEKALB COUNTY*	1300650004E	01/23/1996	961–237	2
4	GA	DEKALB COUNTY*	1300650004E	06/05/1996	963–120	2
4	GA	DEKALB COUNTY*	1300650005G	01/23/1996	961–024	2
4	GA	DEKALB COUNTY*	1300650005G	01/24/1996	961–282	2
4	GA	DEKALB COUNTY*	1300650007C	04/11/1996	96–04–816A	2
4	GA	DEKALB COUNTY*	1300650008C	04/30/1996	962–270	2
4	GA	DEKALB COUNTY*	1300650008C	06/06/1996	963–104	1
4	GA	DEKALB COUNTY*	1300650010C	03/27/1996	962–081	2
4	GA	DEKALB COUNTY*	1300650013F	03/14/1996	96–04–160C	1
4	GA	FAIRBURN, CITY OF	1303140005B	06/05/1996	95–04–105P	5
4	GA	FLOYD COUNTY*	1300790160A	03/20/1996	95–04–454A	1
4	GA	FULTON COUNTY*	1351600015B	03/28/1996	96–04–610A	2
4	GA	FULTON COUNTY*	1351600060B	05/08/1996	962–287	2
4	GA	FULTON COUNTY*	1351600075C	05/15/1996	95–04–121P	5
4	GA	FULTON COUNTY*	1351600080C	02/15/1996	961–243	2
4	GA	FULTON COUNTY*	1351600100B	05/15/1996	95–04–121P	5

Region	State	Community name	Panel number	Effective date	Case No.	Determination
4	GA	FULTON COUNTY*	1351600100B	06/10/1996	963–176	1
4	GA	GWINNETT COUNTY*	1303220165B	04/23/1996	96–04–680A	2
4	GA	HARRIS COUNTY*	1303380150A	03/26/1996	961–230	2
4	GA	HARRIS COUNTY*	1303380150A	03/11/1996	962–136	2
4	GA	HARRIS COUNTY*	1303380150A	04/04/1996	962–230	1
4	GA	HARRIS COUNTY*	1303380150A	04/04/1996	962–231	2
4	GA	HARRIS COUNTY*	1303380150A	05/02/1996	963–013	2
4	GA	HARRIS COUNTY*	1303380150A	05/02/1996	963–014	2
4	GA	HARRIS COUNTY*	1303380150A	05/02/1996	963–015	2
4	GA	HELEN, TOWN OF	1301920001B	02/15/1996	961–215	2
4	GA	MARIETTA, CITY OF	13067C0050F	06/10/1996	963–211	1
4	GA	RICHMOND COUNTY*	1301580060B	03/27/1996	962–234	2
4	GA	SAVANNAH, CITY OF	1351630035C	04/23/1996	96–04–796A	2
4	GA	WALKER COUNTY*	1301800135C	04/04/1996	962–237	1
4	GA	WAYNESBORO, CITY OF	130025 B	05/02/1996	96–04–113P	6
4	KY	CARTER COUNTY*	2100500180B	04/04/1996	953–059	2
4	KY	FLOYD COUNTY*	2100690025C	05/08/1996	962–254	1
4	KY	GARRARD COUNTY*	2100810002B	03/08/1996	96–04–196A	2
4	KY	HOPKINSVILLE, CITY OF	2100550010B	06/07/1996	963–204	2
4	KY	JEFFERSON COUNTY*	21111C0020D	02/27/1996	954–170	1
4	KY	JEFFERSON COUNTY*	21111C0020D	03/21/1996	96–04–656A	2
4	KY	JEFFERSON COUNTY*	21111C0020D	01/23/1996	961–108	2
4	KY	JEFFERSON COUNTY*	21111C0040D	02/16/1996	961–261	2
4	KY	JEFFERSON COUNTY*	21111C0085D	02/15/1996	961–072	2
4	KY	JEFFERSON COUNTY*	21111C0085D	02/16/1996	962–008	1
4	KY	JEFFERSON COUNTY*	21111C0115D	03/27/1996	961–053	1
4	KY	JEFFERSON COUNTY*	21111C0145D	02/26/1996	L–962–094	2
4	KY	JEFFERSON COUNTY*	21111C0160D	03/13/1996	954–218	2
4	KY	JEFFERSON COUNTY*	21111C0160D	01/23/1996	954–266	2
4	KY	JEFFERSON COUNTY*	21111C0160D	03/26/1996	962–055	2
4	KY	JEFFERSON COUNTY*	21111C0170D	02/21/1996	954–286	2
4	KY	JEFFERSON COUNTY*	21111C0170D	03/29/1996	962–169	2
4	KY	JEFFERSON COUNTY*	21111C0170D	03/29/1996	962–170	2
4	KY	JEFFERSON COUNTY*	21111C0170D	03/29/1996	962–171	2
4	KY	JEFFERSON COUNTY*	21111C0170D	03/27/1996	962–172	2
4	KY	JEFFERSON COUNTY*	21111C0180D	01/23/1996	961–171	2
4	KY	JEFFERSON COUNTY*	21111C0190D	04/04/1996	961–248	2
4	KY	JEFFERSON COUNTY*	21111C0190D	05/16/1996	962–286	2
4	KY	JEFFERSON COUNTY*	21111C0190D	05/16/1996	963–008	2
4	KY	JEFFERSON COUNTY*	21111C0190D	05/16/1996	963–009	2
4	KY	JEFFERSON COUNTY*	21111C0190D	06/10/1996	963–088	2
4	KY	JEFFERSON COUNTY*	21111C0235D	04/17/1996	962–265	2
4	KY	KENTON COUNTY*	2101280039B	06/20/1996	96–04–227P	6
4	KY	LEXINGTON–FAYETTE URBAN COUNTY GOVERNMENT.	2100670060C	05/08/1996	962–279	2
4	KY	LEXINGTON–FAYETTE URBAN COUNTY GOVERNMENT.	2100670080C	05/08/1996	954–279	2
4	KY	LOUISVILLE, CITY OF	21111C0080D	05/24/1996	962–205	1
4	KY	LOUISVILLE, CITY OF	21111C0080D	04/04/1996	962–206	1
4	KY	LOUISVILLE, CITY OF	21111C0080D	04/04/1996	962–207	1
4	KY	LOUISVILLE, CITY OF	21111C0080D	04/04/1996	962–209	1
4	KY	LOUISVILLE, CITY OF	21111C0080D	05/24/1996	962–210	1
4	KY	LOUISVILLE, CITY OF	21111C0080D	04/04/1996	962–211	1
4	KY	LOUISVILLE, CITY OF	21111C0080D	04/04/1996	962–212	1
4	KY	LOUISVILLE, CITY OF	21111C0080D	04/04/1996	962–213	1
4	KY	LOUISVILLE, CITY OF	21111C0080D	05/24/1996	962–213A	1
4	KY	LOUISVILLE, CITY OF	21111C0090D	05/24/1996	962–205	1
4	KY	LOUISVILLE, CITY OF	21111C0090D	04/04/1996	962–206	1
4	KY	LOUISVILLE, CITY OF	21111C0090D	04/04/1996	962–207	1
4	KY	LOUISVILLE, CITY OF	21111C0090D	04/04/1996	962–208	1
4	KY	LOUISVILLE, CITY OF	21111C0090D	05/24/1996	962–210	1
4	KY	LOUISVILLE, CITY OF	21111C0090D	04/04/1996	962–213	1
4	KY	LOUISVILLE, CITY OF	21111C0090D	05/24/1996	962–213A	1
4	KY	OWENSBORO, CITY OF	2100630010B	01/11/1996	96–04–094A	2
4	KY	OWENSBORO, CITY OF	2100630010B	03/08/1996	96–04–344A	2
4	KY	WILDER, CITY OF	2100410001B	06/18/1996	963–092	2
4	MS	DESOTO COUNTY*	28033C0040D	01/11/1996	95–04–1142A	1
4	MS	HINDS COUNTY*	2800700250D	06/06/1996	96–04–634A	1
4	MS	HINDS COUNTY*	2800700250D	03/13/1996	961–173A	1
4	MS	HINDS COUNTY*	2800700250D	03/13/1996	961–174A	1
4	MS	HINDS COUNTY*	2800700250D	03/26/1996	961–285	1
4	MS	HINDS COUNTY*	2800700250D	04/04/1996	962–227	1
4	MS	HINDS COUNTY*	2800700250D	04/04/1996	962–228	1

Region	State	Community name	Panel number	Effective date	Case No.	Determination
4	MS	HINDS COUNTY*	2800700250D	05/22/1996	963–019	1
4	MS	HINDS COUNTY*	2800700250D	05/08/1996	963–020	1
4	MS	JACKSON, CITY OF	2800720015F	01/19/1996	923–028A	2
4	MS	JACKSON, CITY OF	2800720015F	02/16/1996	954–272	2
4	MS	MADISON COUNTY*	28089C0310D	01/23/1996	95–04–021P	8
4	MS	MADISON, CITY OF	28089C0310D	01/19/1996	95–04–021P	8
4	MS	MADISON, CITY OF	28089C0310D	05/17/1996	96–04–688A	1
4	MS	MERIDIAN, CITY OF	28075C0115D	06/10/1996	941–156	2
4	MS	PEARL RIVER VALLEY WATER SUPPLY DISTRICT.	2803380065A	05/24/1996	953–152	2
4	MS	PEARL RIVER VALLEY WATER SUPPLY DISTRICT.	2803380065B	06/20/1996	96–04–990A	2
4	MS	PEARL, CITY OF	2801450005B	03/14/1996	96–04–408A	1
4	MS	SOUTHHAVEN, CITY OF	28033C0045D	03/06/1996	96–04–222A	1
4	MS	WARREN COUNTY*	2801980025B	05/09/1996	963–068	1
4	NC	ASHEVILLE, CITY OF	3700320020A	05/02/1996	95–04–339R	8
4	NC	BATH, TOWN OF	3702880001B	04/30/1996	962–001	2
4	NC	BEAUFORT COUNTY*	3700130180B	04/18/1996	962–233	2
4	NC	BEAUFORT COUNTY*	3700130245B	06/20/1996	96–04–828A	2
4	NC	BRUNSWICK COUNTY*	3702950200C	05/22/1996	962–076	2
4	NC	CARTERET COUNTY*	3700430440C	06/21/1996	963–215	2
4	NC	CATAWBA COUNTY*	3700500200B	05/24/1996	96–04–582A	2
4	NC	CATAWBA COUNTY*	3700500200B	01/24/1996	961–229	2
4	NC	CATAWBA COUNTY*	3700500200B	03/12/1996	962–030	2
4	NC	CATAWBA COUNTY*	3700500200B	04/05/1996	962–134	2
4	NC	CATAWBA COUNTY*	3700500200B	04/09/1996	962–197	2
4	NC	CATAWBA COUNTY*	3700500325B	01/24/1996	961–260	2
4	NC	CATAWBA COUNTY*	3700500350B	03/12/1996	962–032	2
4	NC	CATAWBA COUNTY*	3700500350B	06/20/1996	963–182	2
4	NC	CHAPEL HILL, TOWN OF	3701800001E	06/10/1996	963–081	1
4	NC	CHAPEL HILL, TOWN OF	3701800003E	06/25/1996	95–04–373P	5
4	NC	CRAVEN COUNTY*	3700720320B	01/23/1996	961–262	2
4	NC	CRAVEN COUNTY*	3700720340B	06/24/1996	96–04–570A	2
4	NC	CUMBERLAND COUNTY*	3700760155B	05/22/1996	963–082	2
4	NC	CUMBERLAND COUNTY*	3700760155B	05/22/1996	963–083	2
4	NC	CUMBERLAND COUNTY*	3700760155B	05/22/1996	963–084	2
4	NC	CUMBERLAND COUNTY*	3700760155B	05/22/1996	963–085	2
4	NC	CURRITUCK COUNTY*	3700780304C	01/23/1996	961–258	2
4	NC	DARE COUNTY*	3753480007E	03/25/1996	96–04–019P	5
4	NC	DAVIDSON COUNTY*	3703070150B	03/26/1996	961–114	2
4	NC	DAVIDSON COUNTY*	3703070150B	01/23/1996	961–205	2
4	NC	DAVIDSON COUNTY*	3703070150B	05/24/1996	963–129	2
4	NC	DUPLIN COUNTY*	3700830275B	05/09/1996	96–04–698A	2
4	NC	EDEN, CITY OF	3702060001B	03/14/1996	95–04–1138P	6
4	NC	EMERALD ISLE, TOWN OF	3700470002C	03/11/1996	962–046	2
4	NC	EMERALD ISLE, TOWN OF	3700470003C	03/11/1996	962–152	1
4	NC	EMERALD ISLE, TOWN OF	3700470003C	05/22/1996	963–119	2
4	NC	EMERALD ISLE, TOWN OF	3700470003C	05/08/1996	963–149	2
4	NC	FORSYTH COUNTY*	3753490155C	06/18/1996	962–274	1
4	NC	GREENSBORO, CITY OF	3753510008C	05/08/1996	962–269	1
4	NC	HAYWOOD COUNTY*	3701200095B	01/24/1996	95–04–031P	5
4	NC	HAYWOOD COUNTY*	3701200160B	01/24/1996	95–04–031P	5
4	NC	HENDERSON,CITY OF	370367 A	02/27/1996	962–045	2
4	NC	HENDERSONVILLE, CITY OF	3701280003B	05/06/1996	94–04–273P	5
4	NC	HENDERSONVILLE, CITY OF	3701280003B	05/06/1996	95–04–321P	5
4	NC	HENDERSONVILLE, CITY OF	3701280004B	05/06/1996	94–04–273P	5
4	NC	HENDERSONVILLE, CITY OF	3701280004B	01/15/1996	95–04–297P	5
4	NC	HENDERSONVILLE, CITY OF	3701280004B	05/06/1996	95–04–321P	5
4	NC	LONG BEACH, TOWN OF	3753540003D	02/16/1996	961–152	2
4	NC	LONG BEACH, TOWN OF	3753540003D	06/10/1996	962–124	2
4	NC	MECKLENBURG COUNTY*	3701580055B	02/15/1996	962–047	1
4	NC	MECKLENBURG COUNTY*	3701580185B	01/11/1996	95–04–918A	1
4	NC	MECKLENBURG COUNTY*	3701580185B	05/13/1996	96–04–772A	1
4	NC	NAGS HEAD, CITY OF	3753560002E	04/01/1996	96–04–398A	1
4	NC	NEW HANOVER COUNTY*	3701680030D	05/08/1996	963–026	2
4	NC	NEW HANOVER COUNTY*	3701680040D	02/21/1996	961–216	2
4	NC	NEW HANOVER COUNTY*	3701680040D	01/24/1996	961–232	2
4	NC	NEW HANOVER COUNTY*	3701680045E	04/04/1996	954–299	2
4	NC	NEW HANOVER COUNTY*	3701680045E	06/20/1996	96–04–572A	2
4	NC	NEW HANOVER COUNTY*	3701680045E	01/23/1996	961–247	2
4	NC	NEW HANOVER COUNTY*	3701680045E	04/04/1996	962–232	2
4	NC	NEW HANOVER COUNTY*	3701680085E	03/13/1996	961–021	2
4	NC	NEW HANOVER COUNTY*	3701680090E	06/21/1996	962–165	2

Region	State	Community name	Panel number	Effective date	Case No.	Determination
4	NC	PENDER COUNTY*	3703440393B	01/11/1996	96–04–198A	2
4	NC	PENDER COUNTY*	3703440393B	02/20/1996	96–04–356A	2
4	NC	PENDER COUNTY*	3703440394B	06/18/1996	96–04–930A	1
4	NC	PENDER COUNTY*	3703440527C	06/14/1996	96–04–836A	2
4	NC	PENDER COUNTY*	3703440527C	06/26/1996	96–04–870A	2
4	NC	PENDER COUNTY*	3703440527C	05/09/1996	962–203	2
4	NC	ROCKY MOUNT, CITY OF	3700920004C	04/05/1996	962–141	1
4	NC	ROCKY MOUNT, CITY OF	3700920004C	06/10/1996	963–187	2
4	NC	ROCKY MOUNT, CITY OF	3700920005C	04/22/1996	96–04–500A	1
4	NC	SCOTLAND COUNTY*	3703160105B	04/09/1996	954–308	2
4	NC	TOPSAIL BEACH, TOWN OF	3701870007C	05/31/1996	96–04–722A	2
4	NC	TRENT WOODS, TOWNSHIP OF	3704340001A	04/09/1996	962–182	2
4	NC	UNION COUNTY*	37179C0015C	05/24/1996	961–267	1
4	NC	UNION COUNTY*	37179C0090C	06/18/1996	962–200	2
4	NC	WADESBORO, TOWN OF	3700060005B	05/16/1996	953–210	2
4	NC	WAKE FOREST, TOWN OF	37183C0070E	05/02/1996	961–279	1
4	NC	WARREN COUNTY*	3703960002B	04/08/1996	962–143	2
4	NC	WASHINGTON COUNTY*	3702470060B	01/23/1996	954–238	2
4	NC	WASHINGTON COUNTY*	3702470065B	06/10/1996	961–033	2
4	NC	WINDSOR, TOWN OF	3700190004C	04/17/1996	962–261	2
4	NC	WINDSOR, TOWN OF	3700190004C	04/18/1996	962–263	2
4	SC	ANDERSON COUNTY*	4500130025B	04/25/1996	96–04–147P	6
4	SC	BEAUFORT COUNTY*	4500250055D	03/20/1996	96–04–024A	1
4	SC	BERKELEY COUNTY*	4500290290B	04/17/1996	962–229	2
4	SC	BERKELEY COUNTY*	4500290290B	05/08/1996	962–256	2
4	SC	CHARLESTON COUNTY*	4554130350F	05/24/1996	963–133	2
4	SC	CHARLESTON COUNTY*	4554130435G	03/14/1996	96–04–079P	5
4	SC	COLUMBIA, CITY OF	45079C0094G	06/20/1996	96–04–630A	1
4	SC	COLUMBIA, CITY OF	45079C0176G	03/11/1996	962–036	2
4	SC	DORCHESTER COUNTY*	4500680245C	02/15/1996	954–283	2
4	SC	GREENWOOD, CITY OF	4500930001C	04/09/1996	962–157	1
4	SC	HILTON HEAD ISLAND, TOWN OF	4502500013D	02/21/1996	962–099	2
4	SC	KERSHAW COUNTY*	4501150095B	01/19/1996	954–164	2
4	SC	LEXINGTON COUNTY*	45063C0129F	03/27/1996	962–111	1
4	SC	LEXINGTON COUNTY*	45063C0133F	05/07/1996	961–286	2
4	SC	LEXINGTON COUNTY*	45063C0134F	02/16/1996	962–011	2
4	SC	LEXINGTON COUNTY*	45063C0139F	02/27/1996	962–024	2
4	SC	LEXINGTON COUNTY*	45063C0139F	06/06/1996	963–056	2
4	SC	LEXINGTON COUNTY*	45063C0278F	05/08/1996	963–069	2
4	SC	LEXINGTON COUNTY*	45063C0295F	03/27/1996	962–066	2
4	SC	MYRTLE BEACH, CITY OF	45051C0328E	01/11/1996	95–04–784A	2
4	SC	RICHLAND COUNTY*	45079C0025G	04/08/1996	962–129	2
4	SC	ROCK HILL, CITY OF	4501960002C	02/16/1996	954–219	2
4	SC	YORK COUNTY*	4501930125C	04/05/1996	962–131	2
4	TN	BEDFORD COUNTY	4700060003A	05/16/1996	962–189	1
4	TN	BLOUNT COUNTY*	4703560175B	06/21/1996	963–172	2
4	TN	BRADLEY COUNTY*	4703570060B	06/10/1996	963–205	2
4	TN	BRENTWOOD, CITY OF	4702050005C	03/20/1996	95–04–377P	6
4	TN	BRENTWOOD, CITY OF	4702050005C	01/24/1996	961–263	2
4	TN	BRISTOL, CITY OF	4701820003B	01/24/1996	961–197	2
4	TN	CHATTANOOGA, CITY OF	4700720023D	03/11/1996	962–154	1
4	TN	CHEATHAM COUNTY*	4700260180B	05/22/1996	962–147	2
4	TN	CLEVELAND, CITY OF	4700150004D	05/24/1996	963–025	1
4	TN	COLLIERVILLE, CITY OF	47157C0245E	04/04/1996	943–266A	2
4	TN	COLLIERVILLE, CITY OF	47157C0245E	04/03/1996	96–04–512A	1
4	TN	COLLIERVILLE, CITY OF	47157C0295E	06/28/1996	96–04–902A	2
4	TN	COLLIERVILLE, CITY OF	47157C0300E	04/16/1996	96–04–272A	1
4	TN	EAST RIDGE, CITY OF	4754240010D	03/27/1996	962–090	2
4	TN	FARRAGUT, TOWN OF	4703870015A	04/08/1996	962–115	2
4	TN	GATLINBURG, CITY OF	4754260002C	05/09/1996	96–04–736A	2
4	TN	GERMANTOWN, CITY OF	47157C0230E	01/23/1996	961–264	2
4	TN	GERMANTOWN, CITY OF	47157C0235E	04/23/1996	96–04–099P	5
4	TN	GERMANTOWN, CITY OF	47157C0235E	03/12/1996	962–029	2
4	TN	KNOX COUNTY*	4754330080B	01/19/1996	954–253	2
4	TN	MANCHESTER, CITY OF	4700350006B	05/07/1996	963–061	1
4	TN	MARSHALL COUNTY*	47117C0100C	05/07/1996	96–04–606A	2
4	TN	MEMPHIS, CITY OF	47157C0185E	03/29/1996	962–179	2
4	TN	MILAN, TOWN OF	4700600005C	01/23/1996	961–278	2
4	TN	MONTGOMERY COUNTY*	4701360050B	01/19/1996	961–268	2
4	TN	MONTGOMERY COUNTY*	4701360050B	01/19/1996	961–269	2
4	TN	MONTGOMERY COUNTY*	4701360050B	01/19/1996	961–270	2
4	TN	MONTGOMERY COUNTY*	4701360050B	01/19/1996	961–271	2
4	TN	MONTGOMERY COUNTY*	4701360050B	01/19/1996	961–272	2

Region	State	Community name	Panel number	Effective date	Case No.	Determination
4	TN	MONTGOMERY COUNTY*	4701360050B	01/19/1996	961–273	2
4	TN	MONTGOMERY COUNTY*	4701360050B	01/19/1996	961–274	2
4	TN	MONTGOMERY COUNTY*	4701360050B	01/19/1996	961–275	2
4	TN	MONTGOMERY COUNTY*	4701360050B	01/19/1996	961–276	2
4	TN	MONTGOMERY COUNTY*	4701360050B	04/04/1996	962–217	2
4	TN	MONTGOMERY COUNTY*	4701360050B	04/04/1996	962–218	2
4	TN	MONTGOMERY COUNTY*	4701360050B	04/04/1996	962–219	2
4	TN	MONTGOMERY COUNTY*	4701360050B	04/04/1996	962–220	2
4	TN	MONTGOMERY COUNTY*	4701360050B	04/04/1996	962–221	2
4	TN	MURFREESBORO, CITY OF	4701680005C	05/15/1996	96–04–626A	1
4	TN	MURFREESBORO, CITY OF	4701680005C	03/11/1996	962–002	2
4	TN	MURFREESBORO, CITY OF	4701680005C	05/07/1996	962–067	2
4	TN	MURFREESBORO, CITY OF	4701680005C	03/11/1996	962–148	1
4	TN	MURFREESBORO, CITY OF	4701680005C	05/08/1996	963–095	2
4	TN	MURFREESBORO, CITY OF	4701680005C	06/06/1996	963–109	1
4	TN	MURFREESBORO, CITY OF	4701680010C	01/31/1996	96–04–232A	1
4	TN	MURFREESBORO, CITY OF	4701680010C	04/24/1996	96–04–264A	1
4	TN	NASHVILLE, CITY OF & DAVIDSON COUNTY	4700400156B	03/11/1996	961–250	2
4	TN	NASHVILLE, CITY OF & DAVIDSON COUNTY	4700400177B	04/16/1996	96–04–310A	1
4	TN	NASHVILLE, CITY OF & DAVIDSON COUNTY	4700400177B	05/09/1996	96–04–352A	1
4	TN	NASHVILLE, CITY OF & DAVIDSON COUNTY	4700400181B	03/29/1996	961–169	2
4	TN	NASHVILLE, CITY OF & DAVIDSON COUNTY	4700400254C	03/26/1996	96–04–250C	1
4	TN	NASHVILLE, CITY OF & DAVIDSON COUNTY	4700400254C	03/08/1996	96–04–252A	1
4	TN	NASHVILLE, CITY OF & DAVIDSON COUNTY	4700400262C	03/26/1996	96–04–250C	1
4	TN	NASHVILLE, CITY OF & DAVIDSON COUNTY	4700400262C	03/08/1996	96–04–252A	1
4	TN	NASHVILLE, CITY OF & DAVIDSON COUNTY	4700400300C	03/27/1996	954–285	2
4	TN	NORRIS, CITY OF	4700030063B	06/10/1996	963–169	2
4	TN	PIGEON FORGE, CITY OF	4754420002D	05/24/1996	963–127	2
4	TN	RHEA COUNTY	4701510075B	05/22/1996	963–112	2
4	TN	RIPLEY, TOWN OF	4701000004C	05/15/1996	96–04–708A	1
4	TN	RUTHERFORD COUNTY*	4701650035B	06/14/1996	95–04–1036A	1
4	TN	RUTHERFORD COUNTY*	4701650035B	03/13/1996	962–168	1
4	TN	RUTHERFORD COUNTY*	4701650070B	05/28/1996	96–04–918A	1
4	TN	RUTHERFORD COUNTY*	4701650075B	02/27/1996	953–147	1
4	TN	RUTHERFORD COUNTY*	4701650075B	02/27/1996	L–962–096	1
4	TN	SEVIER COUNTY	4702360055B	01/31/1996	96–04–028A	1
4	TN	SHELBY COUNTY*	47157C0090E	02/16/1996	962–023	2
4	TN	SHELBY COUNTY*	47157C0235E	04/03/1996	96–04–426A	1
4	TN	SHELBY COUNTY*	47157C0235E	05/28/1996	96–04–744A	1
4	TN	SHELBY COUNTY*	47157C0240E	03/05/1996	96–04–328A	1
4	TN	SHELBY COUNTY*	47157C0240E	04/23/1996	96–04–480A	1
4	TN	SHELBY COUNTY*	47157C0240E	06/20/1996	96–04–906A	1
4	TN	SHELBY COUNTY*	47157C0240E	01/19/1996	961–211	2
4	TN	SHELBY COUNTY*	47157C0240E	01/19/1996	961–213	2
4	TN	SHELBY COUNTY*	47157C0240E	01/19/1996	961–233	2
4	TN	SHELBY COUNTY*	47157C0240E	05/07/1996	963–010	2
4	TN	SHELBY COUNTY*	47157C0240E	06/10/1996	963–016	2
4	TN	SHELBY COUNTY*	47157C0280E	03/21/1996	96–04–002A	1
4	TN	SHELBY COUNTY*	47157C0280E	04/05/1996	96–04–844A	1
4	TN	SHELBY COUNTY*	47157C0290E	05/03/1996	96–04–374A	1
4	TN	SHELBY COUNTY*	47157C0295E	01/25/1996	95–04–1108A	1
4	TN	SHELBY COUNTY*	47157C0295E	04/16/1996	96–04–470A	1
4	TN	SHELBY COUNTY*	47157C0295E	06/24/1996	96–04–984A	1
4	TN	SPRING CITY, TOWN OF	4754480001B	05/08/1996	96–04–766A	2
4	TN	TRENTON, CITY OF	4700620001B	01/23/1996	961–226	2
4	TN	TRENTON, CITY OF	4700620002B	06/21/1996	962–275	2
4	TN	WILLIAMSON COUNTY*	4702040015C	04/05/1996	962–127	1
4	TN	WILLIAMSON COUNTY*	4702040045D	02/21/1996	953–172	2
4	TN	WILLIAMSON COUNTY*	4702040045D	04/03/1996	96–04–594A	2
4	TN	WILLIAMSON COUNTY*	4702040045D	05/08/1996	962–239	2
4	TN	WILLIAMSON COUNTY*	4702040075C	04/05/1996	962–085	2
4	TN	WILSON COUNTY*	4702070070C	01/24/1996	954–082	2
5	IL	ADDISON, VILLAGE OF	1701980004C	03/12/1996	96–05–910A	1
5	IL	ALTAMONT, CITY OF	1702280005C	06/06/1996	96–05–1812A	2
5	IL	ASKUM, VILLAGE OF	17075C0105D	06/07/1996	96–05–2724A	2
5	IL	AUBURN, CITY OF	1709440005B	04/09/1996	96–05–1940A	2
5	IL	BATAVIA, CITY OF	1703210004B	05/28/1996	96–05–2550A	2
5	IL	BEACH PARK, VILLAGE OF	1710220004C	05/21/1996	96–05–1926A	2
5	IL	BOLINGBROOK, VILLAGE OF	17197C0058E	02/20/1996	96–05–488A	1
5	IL	BUFFALO GROVE, VILLAGE OF	1700680003D	02/21/1996	96–05–652A	1
5	IL	BUFFALO GROVE, VILLAGE OF	1700680006D	06/11/1996	96–05–1960A	2
5	IL	BURNHAM, VILLAGE OF	1700700001B	04/11/1996	96–05–2034A	1
5	IL	CASEYVILLE, VILLAGE OF	1706210002A	01/30/1996	96–05–122A	1

Region	State	Community name	Panel number	Effective date	Case No.	Determination
5	IL	CENTRALIA, CITY OF	1704530005C	02/16/1996	94–05–043P	5
5	IL	CHAMPAIGN COUNTY*	1708940100B	04/19/1996	96–05–1608A	2
5	IL	CHAMPAIGN COUNTY*	1708940180B	01/11/1996	96–05–764A	2
5	IL	CHAMPAIGN COUNTY*	1708940205B	06/03/1996	96–05–1210A	1
5	IL	CHANNAHON, VILLAGE OF	17197C0265E	03/07/1996	96–05–618P	6
5	IL	CHICAGO, CITY OF	1700740036B	06/30/1996	96–05–135P	6
5	IL	CLINTON COUNTY*	1700449999A	05/21/1996	96–05–2272A	2
5	IL	CLINTON, CITY OF	17039C0190D	05/21/1996	96–05–1868A	2
5	IL	COOK COUNTY*	1700540035B	04/24/1996	96–05–1150A	1
5	IL	COOK COUNTY*	1700540050B	03/04/1996	96–05–016A	2
5	IL	COOK COUNTY*	1700540115B	02/28/1996	95–05–2688A	2
5	IL	COOK COUNTY*	1700540195B	02/29/1996	95–05–2240A	2
5	IL	COOK COUNTY*	1700540215B	06/26/1996	96–05–1742A	1
5	IL	COUNTRY CLUB HILLS, CITY OF	1700780001C	06/06/1996	95–05–125P	5
5	IL	CREST HILL, CITY OF	17197C0161E	06/03/1996	96–05–1512A	1
5	IL	DARIEN, CITY OF	1707500001A	02/23/1996	94–05–253P	6
5	IL	DARIEN, CITY OF	1707500001A	02/16/1996	96–05–302A	1
5	IL	DE KALB COUNTY*	170808 B	05/01/1996	96–05–1556A	2
5	IL	DECATUR, CITY OF	1704290020C	05/14/1996	96–05–1164A	2
5	IL	DES PLAINES, CITY OF	1700810005C	04/11/1996	96–05–1228A	2
5	IL	DES PLAINES, CITY OF	1700810005C	01/26/1996	96–05–292A	2
5	IL	DOUGLAS COUNTY*	1701940125B	02/23/1996	95–05–2272A	2
5	IL	DOWNERS GROVE, VILLAGE OF	1702040004B	05/14/1996	96–05–1620A	2
5	IL	DUPAGE COUNTY*	1701970025B	01/25/1996	95–05–2458A	2
5	IL	DUPAGE COUNTY*	1701970025B	04/01/1996	96–05–946A	1
5	IL	DUPAGE COUNTY*	1701970030D	01/19/1996	95–05–2160A	2
5	IL	DUPAGE COUNTY*	1701970040B	06/06/1996	96–05–1178A	2
5	IL	DUPAGE COUNTY*	1701970045B	01/16/1996	95–05–173P	6
5	IL	DUPAGE COUNTY*	1701970050B	05/16/1996	96–05–157P	6
5	IL	DUPAGE COUNTY*	1701970055B	03/18/1996	96–05–1464A	2
5	IL	EFFINGHAM COUNTY*	1702270003A	05/07/1996	96–05–1616A	2
5	IL	EFFINGHAM, CITY OF	170229 B	05/01/1996	96–05–1584A	1
5	IL	ELK GROVE VILLAGE, VILLAGE OF	1700880010C	06/20/1996	96–05–1176A	2
5	IL	ELK GROVE VILLAGE, VILLAGE OF	1700880010C	01/31/1996	96–05–638A	2
5	IL	ELMHURST, CITY OF	1702050004C	01/11/1996	96–05–352A	2
5	IL	ELMHURST, CITY OF	1702050004C	02/20/1996	96–05–872A	2
5	IL	FOX LAKE, VILLAGE OF	1703620005E	04/23/1996	96–05–1384A	2
5	IL	FOX LAKE, VILLAGE OF	1703620005E	06/20/1996	96–05–1518A	2
5	IL	FOX LAKE, VILLAGE OF	1703620005E	06/18/1996	96–05–1550A	2
5	IL	FOX LAKE, VILLAGE OF	1703620005E	04/09/1996	96–05–1570A	2
5	IL	FOX LAKE, VILLAGE OF	1703620005E	01/22/1996	96–05–624A	2
5	IL	FOX LAKE, VILLAGE OF	1703620005E	04/29/1996	96–05–874A	2
5	IL	GALLATIN COUNTY*	1709000150B	06/25/1996	96–05–1030A	2
5	IL	GERMANTOWN, VILLAGE OF	170049 B	02/22/1996	96–05–1046A	2
5	IL	GRAYSLAKE, VILLAGE OF	1703630005C	05/21/1996	96–05–1116A	2
5	IL	GRAYSLAKE, VILLAGE OF	1703630005C	01/11/1996	96–05–622A	2
5	IL	GRUNDY COUNTY*	1702560035C	05/03/1996	96–05–1544A	1
5	IL	GRUNDY COUNTY*	1702560100C	05/01/1996	96–05–370A	2
5	IL	HAMILTON, CITY OF	1702710005B	06/18/1996	96–05–1644A	2
5	IL	HAMPSHIRE, VILLAGE OF	1703270002C	06/05/1996	96–05–165P	5
5	IL	HAWTHORN WOODS, VILLAGE OF	1703660003B	04/01/1996	96–05–012A	2
5	IL	HIGHLAND PARK, CITY OF	1703670005B	02/20/1996	96–05–922C	1
5	IL	HINSDALE, VILLAGE OF	1701050004B	03/08/1996	96–05–350A	2
5	IL	HINSDALE, VILLAGE OF	1701050004B	02/28/1996	96–05–428A	1
5	IL	HOFFMAN ESTATES, VILLAGE OF	1701070007C	06/04/1996	96–05–1382A	2
5	IL	HOFFMAN ESTATES, VILLAGE OF	1701070007C	01/17/1996	96–05–452A	2
5	IL	HOLIDAY HILLS, VILLAGE OF	1709360001B	01/11/1996	96–05–414A	2
5	IL	HOLIDAY HILLS, VILLAGE OF	1709360001B	01/31/1996	96–05–742A	2
5	IL	IROQUOIS COUNTY*	17075C0030D	01/19/1996	95–05–2632A	2
5	IL	ISLAND LAKE, VILLAGE OF	1703700001B	04/09/1996	96–05–546A	1
5	IL	JACKSON COUNTY*	1709270006B	05/01/1996	96–05–2022A	2
5	IL	JOLIET, CITY OF	17197C0141E	01/03/1996	95–05–2152A	1
5	IL	JOLIET, CITY OF	17197C0141E	04/16/1996	96–05–948A	1
5	IL	KANE COUNTY*	1708960010A	04/23/1996	96–05–1170A	2
5	IL	KANE COUNTY*	1708960044B	06/12/1996	96–05–2038A	2
5	IL	KANE COUNTY*	1708960045A	05/09/1996	96–05–2060A	1
5	IL	KANE COUNTY*	1708960107B	06/14/1996	96–05–2328A	2
5	IL	KANKAKEE COUNTY*	1703360060A	04/09/1996	95–05–2600A	2
5	IL	KANKAKEE COUNTY*	1703360170B	04/11/1996	96–05–1188A	2
5	IL	KANKAKEE COUNTY*	1703360180B	05/28/1996	96–05–2508A	2
5	IL	KENDALL COUNTY*	1703410040C	03/18/1996	96–05–1154A	1
5	IL	KILDEER, VILLAGE OF	1703710005B	01/11/1996	95–05–2490A	2
5	IL	KILDEER, VILLAGE OF	1703710005B	06/20/1996	96–05–3070A	2

Region	State	Community name	Panel number	Effective date	Case No.	Determination
5	IL	LA SALLE COUNTY*	1704000003B	04/03/1996	96–05–1462A	2
5	IL	LA SALLE COUNTY*	1704000011B	05/21/1996	96–05–2352A	2
5	IL	LAKE COUNTY*	1703570050B	01/26/1996	96–05–698A	2
5	IL	LAKE COUNTY*	1703570055B	01/26/1996	96–05–698A	2
5	IL	LAKE COUNTY*	1703570075B	06/07/1996	95–05–327P	5
5	IL	LAKE COUNTY*	1703570110B	05/21/1996	96–05–1028A	2
5	IL	LAKE COUNTY*	1703570110B	05/21/1996	96–05–1340A	2
5	IL	LAKE COUNTY*	1703570110B	06/17/1996	96–05–1356A	1
5	IL	LAKE COUNTY*	1703570110B	04/23/1996	96–05–1662A	2
5	IL	LAKE COUNTY*	1703570110B	01/11/1996	96–05–648A	2
5	IL	LAKE COUNTY*	1703570110B	04/09/1996	96–05–744A	2
5	IL	LAKE COUNTY*	1703570115B	03/12/1996	96–05–1056A	2
5	IL	LAKE COUNTY*	1703570115B	03/08/1996	96–05–1168A	2
5	IL	LAKE COUNTY*	1703570115B	01/31/1996	96–05–826A	2
5	IL	LAKE COUNTY*	1703570135B	01/17/1996	95–05–2610A	2
5	IL	LAKE COUNTY*	1703570140B	05/07/1996	96–05–1576A	2
5	IL	LAKE FOREST, CITY OF	1703740003C	05/06/1996	96–05–1354A	1
5	IL	LAKE FOREST, CITY OF	1703740006C	04/29/1996	96–05–1732A	2
5	IL	LAKE–IN–THE–HILLS, VILLAGE OF	1704810002B	03/07/1996	95–05–347P	5
5	IL	LEE COUNTY*	17103C0010D	06/26/1996	96–05–2446A	2
5	IL	LINCOLNSHIRE, VILLAGE OF	1703780005C	06/20/1996	96–05–2106A	1
5	IL	LYNWOOD, VILLAGE OF	1701190005C	04/18/1996	96–05–560C	1
5	IL	MADISON COUNTY*	1704360105B	06/20/1996	96–05–2090A	17
5	IL	MADISON COUNTY*	1704360120B	06/18/1996	96–05–1506A	1
5	IL	MARION, CITY OF	1707190005B	06/06/1996	96–05–1160A	2
5	IL	MATTESON, VILLAGE OF	1701230001C	02/01/1996	95–05–1168P	5
5	IL	MCHENRY COUNTY*	1707320050B	05/21/1996	96–05–1088A	2
5	IL	MCHENRY COUNTY*	1707320080B	06/06/1996	96–05–1746A	2
5	IL	MCHENRY COUNTY*	1707320085C	06/06/1996	96–05–1746A	2
5	IL	MCHENRY COUNTY*	1707320200B	04/22/1996	96–05–646A	2
5	IL	MCHENRY COUNTY*	1707320240B	04/09/1996	96–05–1038A	2
5	IL	MCHENRY COUNTY*	1707320240B	01/25/1996	96–05–388A	2
5	IL	MCHENRY COUNTY*	1707320240B	04/16/1996	96–05–450A	2
5	IL	MCHENRY COUNTY*	1707320335B	06/14/1996	96–05–2134A	2
5	IL	MCHENRY, CITY OF	1704830003D	06/04/1996	96–05–1376A	2
5	IL	MCHENRY, CITY OF	1704830003D	05/14/1996	96–05–1728A	2
5	IL	MELROSE PARK, VILLAGE OF	1701250001B	04/09/1996	96–05–334A	2
5	IL	MENDOTA, CITY OF	1704030005C	05/06/1996	96–05–1380A	2
5	IL	MINOOKA, VILLAGE OF	17197C0255E	04/02/1996	96–05–1514A	2
5	IL	MOLINE, CITY OF	1705910005B	06/04/1996	96–05–1650A	1
5	IL	MONTGOMERY, VILLAGE OF	1703280005B	05/15/1996	96–05–113P	5
5	IL	MORTON, VILLAGE OF	1706520004D	05/28/1996	95–05–257P	5
5	IL	MORTON, VILLAGE OF	1706520006D	02/28/1996	95–05–253P	5
5	IL	MORTON, VILLAGE OF	1706520007D	02/28/1996	95–05–253P	5
5	IL	MORTON, VILLAGE OF	1706520007D	05/28/1996	95–05–257P	5
5	IL	MORTON, VILLAGE OF	1706520007D	05/28/1996	95–05–257P	5
5	IL	MORTON, VILLAGE OF	1706520008D	02/28/1996	95–05–253P	5
5	IL	MOUNT PROSPECT, VILLAGE OF	1701290010B	05/07/1996	96–05–1914A	2
5	IL	MOUNT PROSPECT, VILLAGE OF	1701290015B	02/09/1996	95–05–1836A	2
5	IL	MUNDELEIN, VILLAGE OF	1703820001B	05/13/1996	96–05–832A	1
5	IL	NAPERVILLE, CITY OF	1702130012C	05/03/1996	96–05–2324A	2
5	IL	NAPERVILLE, CITY OF	1702130015C	05/16/1996	96–05–157P	6
5	IL	NAPERVILLE, CITY OF	1702130016C	02/29/1996	95–05–2434A	2
5	IL	NAPERVILLE, CITY OF	1702130021C	06/14/1996	96–05–1592A	2
5	IL	NEW LENOX, VILLAGE OF	1707060005C	04/03/1996	95–05–145P	5
5	IL	NORMAL, TOWN OF	1705020005B	06/14/1996	96–05–1486A	2
5	IL	NORTH AURORA, VILLAGE OF	1703290002C	05/22/1996	96–05–1862A	1
5	IL	NORTHBROOK, VILLAGE OF	1701320008D	05/01/1996	96–05–1798A	2
5	IL	NORTHBROOK, VILLAGE OF	1701320009D	05/01/1996	96–05–1798A	2
5	IL	NORTHBROOK, VILLAGE OF	1701320010D	04/05/1996	96–05–1042A	2
5	IL	NORTHBROOK, VILLAGE OF	1701320010D	03/22/1996	96–05–1052A	17
5	IL	NORTHBROOK, VILLAGE OF	1701320010D	05/13/1996	96–05–1762A	17
5	IL	OAK BROOK, VILLAGE OF	1702140003B	06/07/1996	96–05–1496A	2
5	IL	OAK FOREST, CITY OF	1701360005C	04/09/1996	95–05–2516A	2
5	IL	OAK FOREST, CITY OF	1701360005C	02/22/1996	96–05–1162A	2
5	IL	OAK LAWN, VILLAGE OF	1701370001C	03/06/1996	96–05–1258A	2
5	IL	OAK LAWN, VILLAGE OF	1701370001C	02/13/1996	96–05–520C	1
5	IL	OAK LAWN, VILLAGE OF	1701370001C	04/19/1996	96–05–590A	2
5	IL	OAK LAWN, VILLAGE OF	1701370001C	01/30/1996	96–05–858A	2
5	IL	OAK LAWN, VILLAGE OF	1701370002C	01/23/1996	96–05–860A	2
5	IL	OAK LAWN, VILLAGE OF	1701370002C	02/13/1996	96–05–862A	2
5	IL	OAK LAWN, VILLAGE OF	1701370003C	02/07/1996	96–05–866A	2
5	IL	OAK LAWN, VILLAGE OF	1701370004C	01/30/1996	96–05–864A	2

Region	State	Community name	Panel number	Effective date	Case No.	Determination
5	IL	OAK LAWN, VILLAGE OF	1701370004C	02/07/1996	96–05–866A	2
5	IL	OAK LAWN, VILLAGE OF	1701370004C	02/07/1996	96–05–868A	2
5	IL	OAK LAWN, VILLAGE OF	1701370004C	02/08/1996	96–05–870A	2
5	IL	ORLAND PARK, VILLAGE OF	1701400001D	04/12/1996	95–05–201P	6
5	IL	ORLAND PARK, VILLAGE OF	1701400005D	02/16/1996	95–05–2582A	2
5	IL	OTTAWA, CITY OF	1704050005B	06/04/1996	96–05–2382A	2
5	IL	PALATINE, VILLAGE OF	1751700005B	04/03/1996	96–05–1288A	2
5	IL	PALOS PARK, VILLAGE OF	1701440001B	05/13/1996	95–05–2656A	2
5	IL	PEORIA COUNTY*	1705330125B	05/30/1996	96–05–2100A	2
5	IL	PEORIA COUNTY*	1705330125B	03/22/1996	96–05–808A	2
5	IL	PEORIA COUNTY*	1705330150B	06/04/1996	96–05–678A	2
5	IL	PEORIA, CITY OF	1705360015B	04/03/1996	96–05–1044A	2
5	IL	PIATT COUNTY*	1705420004B	05/07/1996	96–05–1346A	2
5	IL	PLAINFIELD, VILLAGE OF	17197C0038E	03/18/1996	96–05–1304A	1
5	IL	PLAINFIELD, VILLAGE OF	17197C0039E	06/20/1996	96–05–368A	17
5	IL	PONTOON BEACH, VILLAGE OF	1704470001B	04/24/1996	96–05–1130A	1
5	IL	POPE COUNTY*	1709040125B	04/15/1996	96–05–1104A	2
5	IL	PROSPECT HEIGHTS, CITY OF	1709190005C	03/06/1996	96–05–688A	1
5	IL	ROUND LAKE BEACH, VILLAGE OF	1703890001C	05/21/1996	96–05–1638A	2
5	IL	ROUND LAKE BEACH, VILLAGE OF	1703890001C	04/23/1996	96–05–1950A	2
5	IL	SCHAUMBURG, VILLAGE OF	1701580005D	04/11/1996	96–05–125P	6
5	IL	SCHAUMBURG, VILLAGE OF	1701580010D	04/11/1996	96–05–125P	6
5	IL	SCHILLER PARK, VILLAGE OF	1701590005B	03/22/1996	96–05–768A	2
5	IL	ST. CHARLES, CITY OF	1703300004C	06/13/1996	96–05–594A	1
5	IL	ST. CLAIR COUNTY*	1706160040A	05/23/1996	96–05–2532A	2
5	IL	ST. CLAIR COUNTY*	1706160065A	01/23/1996	95–05–2728A	2
5	IL	ST. CLAIR COUNTY*	1706160065A	05/23/1996	96–05–2532A	2
5	IL	ST. CLAIR COUNTY*	1706160075A	06/25/1996	96–05–1386A	2
5	IL	ST. CLAIR COUNTY*	1706160105A	01/19/1996	96–05–476A	2
5	IL	STONE PARK, VILLAGE OF	1701650001B	04/09/1996	96–05–1624A	2
5	IL	TUSCOLA, CITY OF	1701950005C	02/20/1996	96–05–1062A	2
5	IL	TUSCOLA, CITY OF	1701950005C	04/23/1996	96–05–1744A	2
5	IL	WARRENVILLE, CITY OF	1702180002C	01/30/1996	96–05–848A	1
5	IL	WATSEKA, CITY OF	17075C0120D	05/07/1996	96–05–1256A	2
5	IL	WESTMONT, VILLAGE OF	1702200001B	02/28/1996	95–05–2514A	1
5	IL	WESTMONT, VILLAGE OF	1702200001B	06/20/1996	96–05–1740A	2
5	IL	WHEELING, VILLAGE OF	1701730005C	06/24/1996	96–05–1182A	2
5	IL	WHEELING, VILLAGE OF	1701730005C	04/09/1996	96–05–1910A	2
5	IL	WHEELING, VILLAGE OF	1701730005C	01/11/1996	96–05–434A	1
5	IL	WHEELING, VILLAGE OF	1701730005C	02/21/1996	96–05–536A	2
5	IL	WHEELING, VILLAGE OF	1701730005C	01/31/1996	96–05–746A	2
5	IL	WILL COUNTY*	17197C0030E	04/09/1996	96–05–1216A	1
5	IL	WILL COUNTY*	17197C0030E	05/23/1996	96–05–1582A	2
5	IL	WILL COUNTY*	17197C0034E	06/25/1996	96–05–1858A	2
5	IL	WILL COUNTY*	17197C0045E	06/20/1996	96–05–1558A	2
5	IL	WILL COUNTY*	17197C0045E	06/10/1996	96–05–958C	1
5	IL	WILL COUNTY*	17197C0090E	03/15/1996	95–05–2182P	6
5	IL	WILL COUNTY*	17197C0090E	02/09/1996	95–05–2658A	2
5	IL	WILL COUNTY*	17197C0090E	04/26/1996	96–05–1930A	17
5	IL	WILL COUNTY*	17197C0135E	06/10/1996	96–05–958C	1
5	IL	WILL COUNTY*	17197C0185E	06/10/1996	96–05–2228A	1
5	IL	WILL COUNTY*	17197C0212E	06/04/1996	96–05–886A	1
5	IL	WILL COUNTY*	17197C0214E	06/14/1996	96–05–1826A	2
5	IL	WILL COUNTY*	17197C0218E	06/10/1996	96–05–1936A	2
5	IL	WILL COUNTY*	17197C0310E	04/23/1996	96–05–1796A	2
5	IL	WILL COUNTY*	17197C0475E	04/03/1996	96–05–740A	2
5	IL	WINNEBAGO COUNTY*	1707200010B	02/21/1996	96–05–1100A	2
5	IL	WINNEBAGO COUNTY*	1707200015B	05/06/1996	96–05–1368A	2
5	IL	WINNEBAGO COUNTY*	1707200070B	04/16/1996	96–05–1238P	6
5	IN	ALLEN COUNTY*	18003C0145E	02/23/1996	96–05–282A	2
5	IN	ALLEN COUNTY*	18003C0170D	06/04/1996	95–05–1684P	5
5	IN	ALLEN COUNTY*	18003C0170D	02/01/1996	96–05–1014A	2
5	IN	ALLEN COUNTY*	18003C0245D	04/03/1996	95–05–2584A	2
5	IN	BARTHOLOMEW COUNTY*	1800060075B	01/11/1996	96–05–110A	2
5	IN	BARTHOLOMEW COUNTY*	1800060100B	02/20/1996	96–05–516A	1
5	IN	BOONE COUNTY*	1800110085B	01/11/1996	96–05–360A	2
5	IN	BOONE COUNTY*	1800110095B	04/03/1996	96–05–416A	2
5	IN	BOONE COUNTY*	1800110095B	05/06/1996	96–05–538A	2
5	IN	CARMEL, CITY OF	1800810008C	05/28/1996	96–05–1850A	1
5	IN	CARMEL, CITY OF	1800810009C	03/28/1996	96–05–1016A	1
5	IN	CARMEL, CITY OF	1800810013C	02/02/1996	96–05–588A	1
5	IN	CHESTERTON, TOWN OF	1802010005C	05/21/1996	95–05–283P	5
5	IN	CLARK COUNTY*	1804260125C	06/04/1996	96–05–1190A	2

Region	State	Community name	Panel number	Effective date	Case No.	Determination
5	IN	CLARK COUNTY*	1804260125C	04/19/1996	96–05–1224A	2
5	IN	CLARK COUNTY*	1804260125C	05/06/1996	96–05–2058A	2
5	IN	CLARK COUNTY*	1804260150B	04/09/1996	96–05–1560A	2
5	IN	CLARK COUNTY*	1804260175C	05/06/1996	96–05–2218A	2
5	IN	COLUMBUS, CITY OF	1800070015C	02/02/1996	96–05–072A	1
5	IN	COLUMBUS, CITY OF	1800070020C	03/12/1996	96–05–1456A	1
5	IN	COLUMBUS, CITY OF	1800070020C	04/03/1996	96–05–822C	1
5	IN	DE KALB COUNTY*	1800440025B	04/11/1996	96–05–448A	2
5	IN	DELAWARE COUNTY*	1800510075C	04/05/1996	96–05–1460A	1
5	IN	ELKHART COUNTY*	1800560020B	01/23/1996	96–05–356A	2
5	IN	EVANSVILLE, CITY OF	1802570001B	01/29/1996	96–05–136A	1
5	IN	EVANSVILLE, CITY OF	1802570001B	05/23/1996	96–05–1832A	1
5	IN	EVANSVILLE, CITY OF	1802570001B	05/20/1996	96–05–2452A	2
5	IN	EVANSVILLE, CITY OF	1802570001B	01/31/1996	96–05–772A	1
5	IN	EVANSVILLE, CITY OF	1802570004B	01/16/1996	95–05–2252A	1
5	IN	FORT WAYNE, CITY OF	18003C0165E	02/22/1996	96–05–788A	2
5	IN	FORT WAYNE, CITY OF	18003C0260E	04/29/1996	96–05–802A	2
5	IN	FORT WAYNE, CITY OF	18003C0265D	01/11/1996	96–05–040A	2
5	IN	FORT WAYNE, CITY OF	18003C0270E	06/20/1996	96–05–1012A	2
5	IN	FORT WAYNE, CITY OF	18003C0285E	05/07/1996	96–05–1814A	2
5	IN	FORT WAYNE, CITY OF	18003C0290D	01/29/1996	95–05–2360A	2
5	IN	GARY, CITY OF	1801320012C	03/12/1996	96–05–1196A	2
5	IN	GOSHEN, CITY OF	1800580005B	02/02/1996	95–05–1622A	2
5	IN	GRANT COUNTY*	1804350100B	03/28/1996	96–05–1146A	2
5	IN	GREENWOOD, CITY OF	1801150002B	03/06/1996	96–05–878A	1
5	IN	HAMILTON COUNTY*	1800800030B	01/11/1996	95–05–2320A	2
5	IN	HANCOCK COUNTY*	1804190075B	04/24/1996	96–05–1372A	2
5	IN	HANCOCK COUNTY*	1804190075B	03/26/1996	96–05–1410A	2
5	IN	HANCOCK COUNTY*	1804190075B	03/21/1996	96–05–1600A	2
5	IN	HANCOCK COUNTY*	1804190075B	05/20/1996	96–05–2190A	2
5	IN	HANCOCK COUNTY*	1804190075B	06/20/1996	96–05–2222A	2
5	IN	HANCOCK COUNTY*	1804190100B	05/03/1996	96–05–1492A	1
5	IN	HANCOCK COUNTY*	1804190100B	03/12/1996	96–05–810A	2
5	IN	HENDRICKS COUNTY*	1804150050B	03/04/1996	96–05–950A	1
5	IN	HENDRICKS COUNTY*	1804150100B	02/20/1996	96–05–554A	1
5	IN	HENDRICKS COUNTY*	1804150100B	04/22/1996	96–05–770A	1
5	IN	HIGHLAND, TOWN OF	1851760001C	02/20/1996	96–05–212A	1
5	IN	HOWARD COUNTY*	1804140043B	02/02/1996	96–05–610A	2
5	IN	INDIANAPOLIS, CITY OF	1801590015D	01/11/1996	96–05–170A	1
5	IN	INDIANAPOLIS, CITY OF	1801590015D	02/29/1996	96–05–460A	1
5	IN	INDIANAPOLIS, CITY OF	1801590015D	01/11/1996	96–05–498A	2
5	IN	INDIANAPOLIS, CITY OF	1801590015D	05/15/1996	96–05–970A	1
5	IN	INDIANAPOLIS, CITY OF	1801590020D	01/11/1996	96–05–060A	2
5	IN	INDIANAPOLIS, CITY OF	1801590020D	06/26/1996	96–05–2514A	2
5	IN	INDIANAPOLIS, CITY OF	1801590020D	03/07/1996	96–05–732A	2
5	IN	INDIANAPOLIS, CITY OF	1801590030D	01/08/1996	96–05–009P	6
5	IN	INDIANAPOLIS, CITY OF	1801590030D	01/08/1996	96–05–009P	6
5	IN	INDIANAPOLIS, CITY OF	1801590030D	05/28/1996	96–05–730A	2
5	IN	INDIANAPOLIS, CITY OF	1801590035D	01/25/1996	95–05–2398A	1
5	IN	INDIANAPOLIS, CITY OF	1801590035D	01/23/1996	95–05–2630A	2
5	IN	INDIANAPOLIS, CITY OF	1801590035D	04/15/1996	96–05–1454A	1
5	IN	INDIANAPOLIS, CITY OF	1801590040D	01/17/1996	96–05–490A	1
5	IN	INDIANAPOLIS, CITY OF	1801590040D	04/25/1996	96–05–936A	1
5	IN	INDIANAPOLIS, CITY OF	1801590045D	03/04/1996	96–05–1466A	1
5	IN	INDIANAPOLIS, CITY OF	1801590060D	03/18/1996	96–05–1428A	2
5	IN	INDIANAPOLIS, CITY OF	1801590060D	06/20/1996	96–05–1994A	2
5	IN	INDIANAPOLIS, CITY OF	1801590075D	06/27/1996	96–05–1606A	1
5	IN	INDIANAPOLIS, CITY OF	1801590090D	03/12/1996	96–05–792A	2
5	IN	INDIANAPOLIS, CITY OF	1801590100D	06/20/1996	96–05–1008A	2
5	IN	JACKSON COUNTY*	1804050130B	02/20/1996	96–05–658A	1
5	IN	JACKSON COUNTY*	1804050130B	01/28/1996	96–05–806A	2
5	IN	JACKSON COUNTY*	1804050130B	01/28/1996	96–05–806A	2
5	IN	JEFFERSONVILLE, CITY OF	1800270005D	05/23/1996	96–05–1498A	1
5	IN	JEFFERSONVILLE, CITY OF	1800270005D	05/28/1996	96–05–2172A	2
5	IN	JOHNSON COUNTY*	1801110012C	02/01/1996	95–05–2156A	1
5	IN	JOHNSON COUNTY*	1801110012C	01/23/1996	95–05–754P	5
5	IN	JOHNSON COUNTY*	1801110050C	01/31/1996	96–05–240A	2
5	IN	KOSCIUSKO COUNTY*	18085C0045C	01/31/1996	95–05–2194A	2
5	IN	KOSCIUSKO COUNTY*	18085C0080C	04/29/1996	96–05–1370A	2
5	IN	KOSCIUSKO COUNTY*	18085C0080C	03/22/1996	96–05–412A	1
5	IN	KOSCIUSKO COUNTY*	18085C0100C	02/18/1996	96–05–1172A	2
5	IN	KOSCIUSKO COUNTY*	18085C0100C	04/23/1996	96–05–1634A	2
5	IN	KOSCIUSKO COUNTY*	18085C0100C	02/02/1996	96–05–846A	1

Region	State	Community name	Panel number	Effective date	Case No.	Determination
5	IN	KOSCIUSKO COUNTY*	18085C0125C	03/12/1996	95–05–2732A	2
5	IN	LAGRANGE COUNTY	1801250004B	03/12/1996	96–05–686A	2
5	IN	LEBANON, CITY OF	1800130001C	05/13/1996	96–05–1822A	2
5	IN	MARION, CITY OF	1804120005B	06/06/1996	96–05–1998A	2
5	IN	MUNSTER, TOWN OF	1801390002B	06/24/1996	96–05–2158A	2
5	IN	NOBLE COUNTY*	1801830075B	05/28/1996	96–05–2150A	2
5	IN	NOBLESVILLE, CITY OF	1800820005E	04/29/1996	96–05–1020A	2
5	IN	NOBLESVILLE, CITY OF	1800820005E	02/07/1996	96–05–696A	2
5	IN	NOBLESVILLE, CITY OF	1800820015E	05/23/1996	96–05–2056A	1
5	IN	NORTH WEBSTER, TOWN OF	18085C0045C	05/07/1996	96–05–1836A	2
5	IN	PORTER, TOWN OF	1802080002B	05/21/1996	95–05–283P	5
5	IN	PORTER, TOWN OF	1802080004B	05/21/1996	95–05–283P	5
5	IN	PUTNAM COUNTY*	1802130003B	04/29/1996	96–05–1830A	2
5	IN	RUSH COUNTY*	1804210025B	03/26/1996	96–05–408A	2
5	IN	SEYMOUR, CITY OF	1800990004B	04/08/1996	96–05–1792A	2
5	IN	SEYMOUR, CITY OF	1800990004B	05/28/1996	96–05–1988A	2
5	IN	SEYMOUR, CITY OF	1800990004B	05/06/1996	96–05–2242A	2
5	IN	SEYMOUR, CITY OF	1800990004B	06/24/1996	96–05–2296A	2
5	IN	SEYMOUR, CITY OF	1800990004B	02/07/1996	96–05–908A	2
5	IN	SEYMOUR, CITY OF	1800990004B	02/20/1996	96–05–962A	2
5	IN	SHELBY COUNTY*	1802350080B	04/23/1996	96–05–1568A	2
5	IN	ST. JOSEPH COUNTY*	1802240125A	04/23/1996	96–05–2162A	2
5	IN	STEUBEN COUNTY*	1802430025B	06/24/1996	96–05–1090A	2
5	IN	STEUBEN COUNTY*	1802430025B	05/13/1996	96–05–748A	2
5	IN	SYRACUSE, TOWN OF	18085C0027C	04/26/1996	96–05–2070A	2
5	IN	TIPPECANOE COUNTY*	1804280020B	02/29/1996	96–05–1018A	2
5	IN	TIPPECANOE COUNTY*	1804280030B	04/03/1996	96–05–1284A	2
5	IN	TIPPECANOE COUNTY*	1804280075B	04/09/1996	96–05–1010A	2
5	IN	VANDERBURGH COUNTY*	1802560015C	04/11/1996	96–05–1572A	2
5	IN	VANDERBURGH COUNTY*	1802560025C	01/11/1996	95–05–2568A	1
5	IN	VANDERBURGH COUNTY*	1802560025C	03/26/1996	96–05–1000A	2
5	IN	VANDERBURGH COUNTY*	1802560025C	02/28/1996	96–05–1234A	2
5	IN	VANDERBURGH COUNTY*	1802560025C	03/08/1996	96–05–1286A	2
5	IN	VANDERBURGH COUNTY*	1802560025C	04/09/1996	96–05–1320A	1
5	IN	VANDERBURGH COUNTY*	1802560025C	05/06/1996	96–05–1480A	2
5	IN	VANDERBURGH COUNTY*	1802560025C	04/09/1996	96–05–1598A	1
5	IN	VANDERBURGH COUNTY*	1802560025C	05/14/1996	96–05–1788A	2
5	IN	VANDERBURGH COUNTY*	1802560025C	05/01/1996	96–05–1882A	2
5	IN	VANDERBURGH COUNTY*	1802560025C	06/28/1996	96–05–2380A	2
5	IN	VANDERBURGH COUNTY*	1802560025C	06/04/1996	96–05–2670A	2
5	IN	VANDERBURGH COUNTY*	1802560025C	06/12/1996	96–05–2822A	2
5	IN	VANDERBURGH COUNTY*	1802560025C	01/11/1996	96–05–354A	1
5	IN	VANDERBURGH COUNTY*	1802560025C	01/11/1996	96–05–616A	2
5	IN	VANDERBURGH COUNTY*	1802560025C	01/25/1996	96–05–786A	2
5	IN	VANDERBURGH COUNTY*	1802560025C	01/19/1996	96–05–812A	2
5	IN	VANDERBURGH COUNTY*	1802560025C	04/16/1996	96–05–884A	2
5	IN	VANDERBURGH COUNTY*	1802560025C	01/19/1996	96–05–902A	2
5	IN	VANDERBURGH COUNTY*	1802560050B	02/22/1996	96–05–1318A	1
5	IN	VANDERBURGH COUNTY*	1802560050B	06/14/1996	96–05–2824A	2
5	IN	VANDERBURGH COUNTY*	1802560075C	06/12/1996	96–05–2068A	1
5	IN	VANDERBURGH COUNTY*	1802560075C	06/14/1996	96–05–2700A	2
5	IN	VANDERBURGH COUNTY*	1802560100B	01/29/1996	96–05–158A	2
5	IN	VIGO COUNTY*	1802630070B	06/04/1996	96–05–2270A	2
5	IN	WARRICK COUNTY*	1804180125B	06/24/1996	96–05–2464A	2
5	IN	WARRICK COUNTY*	1804180175B	05/07/1996	95–05–2280A	2
5	IN	WARRICK COUNTY*	1804180175B	05/21/1996	96–05–1546A	2
5	IN	WARRICK COUNTY*	1804180175B	05/07/1996	96–05–1700A	2
5	IN	WARRICK COUNTY*	1804180175B	05/07/1996	96–05–1900A	2
5	IN	WESTFIELD, TOWN OF	1800830015C	05/20/1996	96–05–065P	5
5	IN	WHITELAND, TOWN OF	1801180001A	03/19/1996	96–05–454C	1
5	IN	WHITLEY COUNTY*	1802980001B	05/01/1996	96–05–444A	2
5	IN	WHITLEY COUNTY*	1802980002B	06/14/1996	96–05–1502A	2
5	IN	WHITLEY COUNTY*	1802980006B	03/08/1996	96–05–1006A	2
5	IN	WINONA LAKE, TOWN OF	18085C0086C	03/12/1996	96–05–784A	2
5	MI	ALGONAC, CITY OF	2601910001C	05/03/1996	96–05–1488A	1
5	MI	ARGENTINE, TOWNSHIP OF	2603920010A	05/07/1996	96–05–2044A	2
5	MI	ATLAS, TOWNSHIP OF	2603930010A	01/31/1996	96–05–604A	2
5	MI	BATTLE CREEK, CITY OF	2600510012B	04/03/1996	96–05–348A	2
5	MI	BAY MILLS, TOWNSHIP OF	2603740050B	03/28/1996	96–05–526A	2
5	MI	BAY MILLS, TOWNSHIP OF	2603740050B	02/16/1996	96–05–758A	2
5	MI	CADILLAC, CITY OF	260247 A	04/03/1996	96–05–466A	2
5	MI	CANTON, TOWNSHIP OF	2602190002B	04/03/1996	96–05–1342A	2
5	MI	CANTON, TOWNSHIP OF	2602190003B	05/21/1996	95–05–141P	5

Region	State	Community name	Panel number	Effective date	Case No.	Determination
5	MI	CASCADE CHARTER, TOWNSHIP OF	2608140025A	05/07/1996	96–05–1880A	2
5	MI	CASCADE CHARTER, TOWNSHIP OF	2608140025A	06/14/1996	96–05–2506A	2
5	MI	CHESTERFIELD, TOWNSHIP OF	2601200010B	05/31/1996	96–05–2144A	2
5	MI	CLARK, TOWNSHIP OF	2607590050B	03/25/1996	96–05–1040A	2
5	MI	CLEVELAND, TOWNSHIP OF	260302 A	02/26/1996	96–05–378A	2
5	MI	CLEVELAND, TOWNSHIP OF	260302 A	04/09/1996	96–05–470A	2
5	MI	CLINTON, TOWNSHIP OF	2601210005D	04/15/1996	96–05–1984A	2
5	MI	CLINTON, TOWNSHIP OF	2601210010D	04/15/1996	96–05–1984A	2
5	MI	COMMERCE, TOWNSHIP OF	2604730005B	01/11/1996	96–05–338A	2
5	MI	DEARBORN, CITY OF	2602200005D	06/24/1996	96–05–1890A	2
5	MI	DEARBORN, CITY OF	2602200005D	05/14/1996	96–05–904A	2
5	MI	DEARBORN, CITY OF	2602200010D	05/14/1996	96–05–904A	2
5	MI	DELHI, CHARTER TOWNSHIP OF	2600880005C	01/31/1996	96–05–364A	2
5	MI	DUNDEE, TOWNSHIP OF	2601440010B	01/22/1996	95–05–2180A	2
5	MI	FABIUS, TOWNSHIP OF	2607810025A	03/08/1996	96–05–1252A	2
5	MI	FABIUS, TOWNSHIP OF	2607810025A	03/27/1996	96–05–1566A	2
5	MI	FABIUS, TOWNSHIP OF	2607810025A	02/20/1996	96–05–900A	2
5	MI	FABIUS, TOWNSHIP OF	2607810025A	02/18/1996	96–05–940A	2
5	MI	FARMINGTON HILLS, CITY OF	2601720020B	02/22/1996	96–05–1142A	2
5	MI	FARMINGTON HILLS, CITY OF	2601720020B	06/12/1996	96–05–1968A	1
5	MI	FRANKENLUST, TOWNSHIP OF	2600220010A	03/12/1996	96–05–1282A	2
5	MI	FRUITLAND, TOWNSHIP OF	260265 B	05/06/1996	96–05–1434A	2
5	MI	GEORGETOWN, CHARTER TOWNSHIP OF	2605890003B	04/05/1996	96–05–614A	2
5	MI	GEORGETOWN, CHARTER TOWNSHIP OF	2605890005B	03/15/1996	95–05–023P	6
5	MI	GRAND HAVEN, TOWNSHIP OF	2602700005B	02/22/1996	96–05–584A	2
5	MI	GRANDVILLE, CITY OF	2602710003B	02/02/1996	96–05–528A	2
5	MI	GREENBUSH, TOWNSHIP OF	2600010004C	01/31/1996	95–05–2478A	2
5	MI	GREENBUSH, TOWNSHIP OF	2600010004C	02/20/1996	96–05–228A	2
5	MI	GREENBUSH, TOWNSHIP OF	2600010004C	03/12/1996	96–05–440A	2
5	MI	GREENBUSH, TOWNSHIP OF	2600010004C	02/20/1996	96–05–706A	2
5	MI	GREENBUSH, TOWNSHIP OF	2600010007C	04/10/1996	96–05–018A	2
5	MI	GROSSE ILE, TOWNSHIP OF	2602270005B	04/29/1996	96–05–1708A	2
5	MI	HAMPTON, TOWNSHIP OF	2600230015B	03/25/1996	96–05–774A	2
5	MI	HIGHLAND, TOWNSHIP OF	2606500010A	06/06/1996	96–05–2538A	2
5	MI	HOLLAND, CITY OF	2600060010C	02/24/1996	96–05–067P	6
5	MI	HOLLAND, TOWNSHIP OF	2604920006D	02/24/1996	96–05–067P	6
5	MI	INDEPENDENCE, TOWNSHIP OF	2604750006B	01/17/1996	96–05–322A	1
5	MI	INDEPENDENCE, TOWNSHIP OF	2604750008B	06/07/1996	96–05–2154A	2
5	MI	INDEPENDENCE, TOWNSHIP OF	2604750008B	06/07/1996	96–05–2264A	2
5	MI	IRA, TOWNSHIP OF	2601990005B	05/31/1996	96–05–1482A	2
5	MI	KENTWOOD, CITY OF	2601070010B	05/13/1996	96–05–2080A	2
5	MI	KENTWOOD, CITY OF	2601070010B	06/20/1996	96–05–2440A	2
5	MI	KOCHVILLE, TOWNSHIP OF	2605010002A	05/01/1996	96–05–1990A	2
5	MI	LAKE ORION, VILLAGE OF	2605880001A	06/06/1996	96–05–2374A	2
5	MI	LEELANAU, TOWNSHIP OF	260114 B	06/20/1996	96–05–1578A	2
5	MI	LEELANAU, TOWNSHIP OF	260114 B	03/18/1996	96–05–478A	2
5	MI	LINCOLN, TOWNSHIP OF	2608280005A	06/26/1996	96–05–2250A	2
5	MI	LOCKPORT, TOWNSHIP OF	2607150010B	02/28/1996	96–05–942A	2
5	MI	MACOMB, TOWNSHIP OF	2604450010B	03/05/1996	95–05–343P	6
5	MI	MACOMB, TOWNSHIP OF	2604450010B	05/31/1996	96–05–316A	2
5	MI	MACOMB, TOWNSHIP OF	2604450020B	02/21/1996	96–05–522A	2
5	MI	MENOMINEE, CITY OF	2601380005B	04/23/1996	96–05–1770A	2
5	MI	MENOMINEE, CITY OF	2601380005B	02/22/1996	96–05–406A	2
5	MI	MENOMINEE, TOWNSHIP OF	2607020015B	05/29/1996	96–05–1632A	2
5	MI	MENOMINEE, TOWNSHIP OF	2607020020B	05/06/1996	96–05–736A	2
5	MI	MENOMINEE, TOWNSHIP OF	2607020025B	02/28/1996	96–05–384A	2
5	MI	MENOMINEE, TOWNSHIP OF	2607020030B	06/14/1996	96–05–1068A	2
5	MI	MERIDIAN, CHARTER TOWNSHIP OF	2600930001A	06/04/1996	95–05–1170A	1
5	MI	MERIDIAN, CHARTER TOWNSHIP OF	2600930001A	04/16/1996	96–05–1208A	1
5	MI	MERIDIAN, CHARTER TOWNSHIP OF	2600930001A	01/11/1996	96–05–542A	2
5	MI	MERIDIAN, CHARTER TOWNSHIP OF	2600930001A	01/11/1996	96–05–634A	2
5	MI	MIDLAND, CITY OF	2601400004C	04/09/1996	96–05–474A	1
5	MI	MIDLAND, CITY OF	2601400007D	04/09/1996	96–05–1842A	2
5	MI	MIDLAND, CITY OF	2601400007D	06/04/1996	96–05–2476A	2
5	MI	MIDLAND, CITY OF	2601400007D	05/28/1996	96–05–2530A	2
5	MI	MIDLAND, CITY OF	2601400008D	06/20/1996	96–05–2810A	2
5	MI	MONROE, TOWNSHIP OF	2601540001A	03/18/1996	96–05–1446A	2
5	MI	NORTHFIELD, TOWNSHIP OF	2606350005A	05/28/1996	96–05–1358A	2
5	MI	NORVELL, TOWNSHIP OF	260424 A	01/11/1996	95–05–2234A	1
5	MI	NORVELL, TOWNSHIP OF	260424 A	03/28/1996	96–05–1450A	2
5	MI	NOVI, CITY OF	2601750009C	06/14/1996	96–05–2648A	17
5	MI	PUTNAM, TOWNSHIP OF	2604420020C	04/30/1996	95–05–1240A	2
5	MI	RABER, TOWNSHIP OF	2607860025A	02/29/1996	96–05–108A	1

Region	State	Community name	Panel number	Effective date	Case No.	Determination
5	MI	REDFORD, TOWNSHIP OF	2602380005B	02/22/1996	96–05–288A	2
5	MI	RUSH, TOWNSHIP OF	260522 A	03/28/1996	96–05–1098A	2
5	MI	SALEM,TOWNSHIP OF	2606360002B	06/25/1996	96–05–2322A	1
5	MI	SEBEWAING, VILLAGE OF	2605720001A	04/15/1996	96–05–1134A	2
5	MI	SPRING LAKE, TOWNSHIP OF	2602810002B	04/29/1996	96–05–1352C	2
5	MI	ST. CLAIR SHORES, CITY OF	2601270005B	04/25/1996	96–05–776A	2
5	MI	ST. JOSEPH, TOWNSHIP OF	2600450005A	05/30/1996	96–05–1048A	2
5	MI	TAYLOR, CITY OF	2607280004A	01/22/1996	96–05–596A	2
5	MI	THOMAS, TOWNSHIP OF	2606030020A	03/26/1996	96–05–1080A	2
5	MI	TRAVERSE CITY, CITY OF	2600820002B	06/25/1996	96–05–650A	2
5	MI	TROY, CITY OF	2601800004E	03/06/1996	96–05–1226A	2
5	MI	TROY, CITY OF	2601800004E	05/07/1996	96–05–1244A	2
5	MI	TROY, CITY OF	2601800004E	05/07/1996	96–05–1474A	2
5	MI	TROY, CITY OF	2601800004E	04/11/1996	96–05–1750A	2
5	MI	TROY, CITY OF	2601800004E	03/14/1996	96–05–796A	2
5	MI	TROY, CITY OF	2601800006E	04/15/1996	95–05–2402A	2
5	MI	TROY, CITY OF	2601800006E	05/09/1996	96–05–1610A	2
5	MI	TROY, CITY OF	2601800006E	06/04/1996	96–05–376A	2
5	MI	WARREN, CITY OF	2601290005C	04/18/1996	96–05–726A	2
5	MI	WARREN, CITY OF	2601290010C	06/20/1996	96–05–2020A	2
5	MI	WATERFORD, CHARTER TOWNSHIP OF	2602840005B	04/11/1996	96–05–1472A	2
5	MI	WATERFORD, CHARTER TOWNSHIP OF	2602840010B	05/13/1996	96–05–1032A	2
5	MI	WATERFORD, CHARTER TOWNSHIP OF	2602840010B	05/01/1996	96–05–1294A	2
5	MI	WATERFORD, CHARTER TOWNSHIP OF	2602840010B	04/23/1996	96–05–1676A	2
5	MI	WATERFORD, CHARTER TOWNSHIP OF	2602840020B	03/12/1996	96–05–1402A	2
5	MI	WEST BLOOMFIELD, TOWNSHIP OF	2601820005B	06/10/1996	96–05–1222A	2
5	MI	WEST BLOOMFIELD, TOWNSHIP OF	2601820005B	03/21/1996	96–05–480A	2
5	MI	WHITE LAKE, TOWNSHIP OF	2604790005B	05/13/1996	96–05–1554A	2
5	MI	WHITE LAKE, TOWNSHIP OF	2604790010B	06/18/1996	96–05–1540A	2
5	MI	WHITEFISH, TOWNSHIP OF	2603210050C	01/19/1996	96–05–222A	2
5	MI	WHITEWATER, TOWNSHIP OF	2607940025A	06/04/1996	96–05–856A	2
5	MI	WOLVERINE LAKE, VILLAGE OF	260480 A	06/07/1996	96–05–1404A	2
5	MI	WOLVERINE LAKE, VILLAGE OF	2604809999A	03/12/1996	96–05–1136A	2
5	MI	ZILWAUKEE, CITY OF	2602850005C	01/11/1996	95–05–2642A	2
5	MI	ZILWAUKEE, CITY OF	2602850005C	05/21/1996	96–05–966A	2
5	MN	AITKIN COUNTY*	2706280065B	02/21/1996	96–05–790A	2
5	MN	AITKIN COUNTY*	2706280215C	02/05/1996	96–05–636A	2
5	MN	AITKIN COUNTY*	2706280425B	02/20/1996	96–05–1246A	2
5	MN	ANOKA COUNTY*	2700050050A	01/19/1996	96–05–268A	2
5	MN	AUSTIN, CITY OF	2752280004B	03/22/1996	96–05–1400A	2
5	MN	BENTON COUNTY*	2700190050B	04/03/1996	96–05–1060A	2
5	MN	BLAINE, CITY OF	2700070005C	05/03/1996	96–05–1490A	1
5	MN	BLAINE, CITY OF	2700070005C	04/05/1996	96–05–1618A	2
5	MN	BLAINE, CITY OF	2700070005C	06/04/1996	96–05–2604A	1
5	MN	BLAINE, CITY OF	2700070005C	06/04/1996	96–05–494A	1
5	MN	BLAINE, CITY OF	2700070005C	01/17/1996	96–05–504A	1
5	MN	BLAINE, CITY OF	2700070010C	05/21/1996	96–05–1338A	2
5	MN	BLUE EARTH COUNTY*	2752310200D	05/21/1996	96–05–1938A	2
5	MN	CENTER CITY, CITY OF	2706850001A	02/20/1996	96–05–704A	2
5	MN	CHANHASSEN, CITY OF	2700510005B	01/11/1996	96–05–464A	2
5	MN	COLUMBIA HEIGHTS, CITY OF	2700100005B	01/11/1996	95–05–2676A	2
5	MN	COON RAPIDS, CITY OF	2700110001A	04/04/1996	96–05–258A	2
5	MN	CROSSLAKE, CITY OF	270095 B	03/18/1996	96–05–232A	2
5	MN	CROW WING COUNTY*	2700910225B	05/14/1996	96–05–2412A	2
5	MN	EAST BETHEL, CITY OF	2700120010A	01/11/1996	96–05–244A	2
5	MN	EAST GRAND FORKS, CITY OF	2752360005C	02/29/1996	96–05–644A	2
5	MN	EDEN PRAIRIE, CITY OF	2701590005C	04/23/1996	96–05–580A	2
5	MN	EDEN PRAIRIE, CITY OF	2701590005C	01/17/1996	96–05–840A	1
5	MN	EDEN PRAIRIE, CITY OF	2701590010C	04/23/1996	96–05–794A	2
5	MN	HAM LAKE, CITY OF	2706740005B	01/11/1996	95–05–2342A	2
5	MN	HAM LAKE, CITY OF	2706740005B	04/22/1996	96–05–1972A	2
5	MN	HAM LAKE, CITY OF	2706740005B	01/11/1996	96–05–752A	2
5	MN	HAM LAKE, CITY OF	2706740005B	02/13/1996	96–05–916A	2
5	MN	HAM LAKE, CITY OF	2706740010B	06/04/1996	96–05–1050A	2
5	MN	HOPKINS, CITY OF	2701660001C	03/14/1996	96–05–668A	1
5	MN	ISANTI COUNTY*	2701970035A	02/18/1996	96–05–676A	2
5	MN	ISANTI COUNTY*	2701970040A	03/12/1996	96–05–1034A	2
5	MN	ITASCA COUNTY*	2702000675A	02/13/1996	96–05–508A	2
5	MN	ITASCA COUNTY*	2702000775A	01/11/1996	96–05–308A	2
5	MN	ITASCA COUNTY*	2702000775A	02/14/1996	96–05–672A	2
5	MN	KOOCHICHING COUNTY*	2702330006B	01/17/1996	96–05–028A	2
5	MN	LAKEVILLE, CITY OF	2701070005B	02/08/1996	96–05–015P	5
5	MN	LAKEVILLE, CITY OF	2701070005B	06/25/1996	96–05–1758A	2

Region	State	Community name	Panel number	Effective date	Case No.	Determination
5	MN	LAKEVILLE, CITY OF	2701070005B	06/25/1996	96–05–2168A	2
5	MN	LINO LAKES, CITY OF	2700150010B	04/16/1996	96–05–1322A	1
5	MN	LITTLE FALLS, CITY OF	2702990001B	05/13/1996	96–05–1594A	1
5	MN	MARSHALL, CITY OF	2702580002C	01/11/1996	96–05–278A	1
5	MN	MC LEOD COUNTY*	2706160025C	05/20/1996	96–05–1344A	2
5	MN	MINNETRISTA, CITY OF	270175 B	03/22/1996	96–05–1654A	2
5	MN	MINNETRISTA, CITY OF	270175 B	01/19/1996	96–05–438A	2
5	MN	MOORHEAD, CITY OF	2752440010D	01/26/1996	95–05–2648A	2
5	MN	MORRISON COUNTY*	2706170200B	03/12/1996	96–05–304A	2
5	MN	ORTONVILLE, CITY OF	2700280005B	06/14/1996	96–05–1876A	2
5	MN	OWATONNA, CITY OF	2704630004B	02/08/1996	96–05–496A	1
5	MN	PINE COUNTY*	2707040400B	06/10/1996	96–05–2426A	2
5	MN	POLK COUNTY*	2705030100B	01/11/1996	96–05–036A	2
5	MN	PRIOR LAKE, CITY OF	2704320005B	04/24/1996	96–05–1124A	2
5	MN	PRIOR LAKE, CITY OF	2704320005B	06/14/1996	96–05–2678A	2
5	MN	RICE COUNTY*	2706460025C	05/20/1996	96–05–1036A	2
5	MN	RICE COUNTY*	2706460025C	02/20/1996	96–05–290A	2
5	MN	SCOTT COUNTY*	2704280100C	05/07/1996	96–05–1866A	2
5	MN	SCOTT COUNTY*	2704280100C	02/13/1996	96–05–642A	2
5	MN	SHERBURNE COUNTY*	2704350025C	01/31/1996	95–05–2408A	2
5	MN	SHERBURNE COUNTY*	2704350050C	05/28/1996	96–05–2448A	2
5	MN	SHOREWOOD, CITY OF	2701850015C	06/18/1996	96–05–1778A	1
5	MN	ST. LOUIS PARK, CITY OF	2701840005B	02/05/1996	95–05–2668A	1
5	MN	WASHINGTON COUNTY*	2704990125B	05/22/1996	96–05–1114A	2
5	MN	WASHINGTON COUNTY*	2704990125B	01/25/1996	96–05–630A	2
5	MN	WHITE BEAR, TOWNSHIP OF	2706880005B	01/19/1996	96–05–386A	2
5	MN	WORTHINGTON, CITY OF	2703210003B	06/07/1996	96–05–1756A	2
5	OH	AMHERST, CITY OF	3903470005B	01/31/1996	96–05–204A	2
5	OH	ATHENS, CITY OF	3900160005B	02/02/1996	95–05–099P	6
5	OH	AUGLAIZE COUNTY*	39011C0090C	01/11/1996	95–05–2384A	1
5	OH	AUGLAIZE COUNTY*	39011C0090C	05/29/1996	96–05–1366A	1
5	OH	AUGLAIZE COUNTY*	39011C0090C	01/17/1996	96–05–532A	2
5	OH	AUGLAIZE COUNTY*	39011C0090C	01/31/1996	96–05–672A	2
5	OH	AVON, CITY OF	3903480005C	04/18/1996	95–05–161P	5
5	OH	AVON, CITY OF	3903480005C	01/11/1996	95–05–2454A	1
5	OH	AVON, CITY OF	3903480005C	04/11/1996	96–05–1122A	2
5	OH	AVON, CITY OF	3903480005C	04/10/1996	96–05–2120A	1
5	OH	AVON, CITY OF	3903480005C	02/22/1996	96–05–272A	2
5	OH	AVON, CITY OF	3903480005C	02/02/1996	96–05–314A	2
5	OH	BRECKSVILLE, CITY OF	3900980004C	02/21/1996	96–05–500A	2
5	OH	BROADVIEW HEIGHTS, CITY OF	3900990001B	02/02/1996	94–05–299P	5
5	OH	BUCKEYE LAKE, VILLAGE OF	3908820001A	05/21/1996	96–05–2050A	2
5	OH	BUTLER COUNTY*	3900370070B	04/24/1996	96–05–1664A	2
5	OH	BUTLER COUNTY*	3900370085B	05/01/1996	96–05–1648A	2
5	OH	BUTLER COUNTY*	3900370120B	06/04/1996	96–05–1720A	2
5	OH	CANAL WINCHESTER, VILLAGE OF	39049C0385G	03/12/1996	96–05–1516A	2
5	OH	CLARK COUNTY*	3907320180A	06/04/1996	96–05–2582A	2
5	OH	CLERMONT COUNTY*	3900650005B	02/22/1996	96–05–842A	1
5	OH	COLUMBUS, CITY OF	39049C0136G	03/14/1996	95–05–083P	5
5	OH	COLUMBUS, CITY OF	39049C0138G	03/14/1996	95–05–083P	5
5	OH	COLUMBUS, CITY OF	39049C0180G	04/10/1996	96–05–1132C	1
5	OH	COLUMBUS, CITY OF	39049C0245G	02/28/1996	96–05–486A	1
5	OH	COLUMBUS, CITY OF	39049C0295G	01/11/1996	95–05–2544A	2
5	OH	COLUMBUS, CITY OF	39049C0295G	06/10/1996	96–05–1564A	1
5	OH	DELAWARE COUNTY*	3901460110B	01/31/1996	96–05–1138A	2
5	OH	DELAWARE COUNTY*	3901460110B	01/17/1996	96–05–174A	2
5	OH	DELAWARE COUNTY*	3901460110B	05/28/1996	96–05–2430A	1
5	OH	DUBLIN, CITY OF	3906730003D	04/29/1996	95–05–1802A	1
5	OH	ELYRIA, CITY OF	3903500005B	04/19/1996	96–05–137P	5
5	OH	ERIE COUNTY*	3901530075C	05/03/1996	96–05–1412A	1
5	OH	FAIRFIELD COUNTY*	3901580035D	06/06/1996	96–05–1524A	2
5	OH	FAIRFIELD COUNTY*	3901580105D	04/30/1996	96–05–123P	5
5	OH	FAIRFIELD, CITY OF	3900380005B	05/13/1996	96–05–1440A	1
5	OH	FINDLAY, CITY	3902440004B	04/30/1996	95–05–295P	8
5	OH	FINDLAY, CITY	3902440005C	04/30/1996	95–05–295P	8
5	OH	FINDLAY, CITY	3902440005C	05/20/1996	96–05–1272A	2
5	OH	FINDLAY, CITY	3902440005C	05/20/1996	96–05–1768A	2
5	OH	FINDLAY, CITY	3902440007B	04/30/1996	95–05–295P	8
5	OH	FINDLAY, CITY	3902440008C	04/30/1996	95–05–295P	8
5	OH	FRANKLIN COUNTY*	39049C0270G	04/23/1996	96–05–1536A	2
5	OH	FRANKLIN COUNTY*	39049C0290G	02/29/1996	96–05–682A	2
5	OH	GAHANNA, CITY OF	39049C0188G	05/20/1996	96–05–1604A	1
5	OH	GAHANNA, CITY OF	39049C0188G	05/21/1996	96–05–1904A	1

Region	State	Community name	Panel number	Effective date	Case No.	Determination
5	OH	GREENVILLE, CITY OF	3901390002C	05/28/1996	96–05–2094A	2
5	OH	HAMILTON COUNTY*	3902040035B	04/24/1996	96–05–656A	1
5	OH	HAMILTON COUNTY*	3902040040C	02/20/1996	96–05–920A	2
5	OH	HAMILTON COUNTY*	3902040105B	06/24/1996	96–05–1658A	2
5	OH	HANCOCK COUNTY*	3907670080B	06/12/1996	96–05–2398A	2
5	OH	HANCOCK COUNTY*	3907670080B	04/15/1996	96–05–564A	1
5	OH	HANCOCK COUNTY*	3907670080B	06/27/1996	96–05–926A	1
5	OH	HARRISON, CITY OF	3902200005C	02/07/1996	96–05–568A	1
5	OH	HIGHLAND HEIGHTS, CITY OF	3901100001C	01/30/1996	95–05–2534A	2
5	OH	HILLIARD, CITY OF	39049C0136G	03/06/1996	95–05–083P	5
5	OH	HILLIARD, CITY OF	39049C0138G	03/06/1996	95–05–083P	5
5	OH	LAKE COUNTY*	3907710028C	05/07/1996	96–05–1086A	2
5	OH	LAKE COUNTY*	3907710049C	02/29/1996	96–05–422A	2
5	OH	LANCASTER, CITY OF	3901610005D	06/04/1996	96–05–2318A	2
5	OH	LOGAN COUNTY*	3907720025C	04/23/1996	96–05–2166A	2
5	OH	LOGAN COUNTY*	3907720025C	03/08/1996	96–05–710A	2
5	OH	LONDON,CITY OF	3903660002B	02/05/1996	95–05–315P	5
5	OH	LORAIN COUNTY*	3903460110C	06/06/1996	96–05–1148A	2
5	OH	LORAIN, CITY OF	3903510004C	04/03/1996	96–05–1932A	2
5	OH	LUCAS COUNTY*	3903590015B	04/09/1996	96–05–934A	2
5	OH	LUCAS COUNTY*	3903590025B	01/19/1996	96–05–754A	2
5	OH	MADISON COUNTY*	3907730075B	01/29/1996	96–05–602A	2
5	OH	MARION COUNTY*	39101C0055C	06/11/1996	96–05–1280A	2
5	OH	MASON, CITY OF	3905590005C	01/31/1996	95–05–213P	8
5	OH	MEDINA COUNTY*	3903780005B	04/01/1996	96–05–382A	1
5	OH	MENTOR, CITY OF	3903170005E	04/19/1996	96–05–1076A	2
5	OH	MERCER COUNTY*	3903920100B	06/24/1996	96–05–1108A	2
5	OH	MERCER COUNTY*	3903920100B	05/07/1996	96–05–1436A	2
5	OH	MERCER COUNTY*	3903920100B	02/29/1996	96–05–186A	2
5	OH	MERCER COUNTY*	3903920100B	06/06/1996	96–05–1872A	2
5	OH	MERCER COUNTY*	3903920100B	06/24/1996	96–05–1966A	2
5	OH	MERCER COUNTY*	3903920100B	05/07/1996	96–05–2118A	2
5	OH	MERCER COUNTY*	3903920100B	05/07/1996	96–05–2156A	2
5	OH	MERCER COUNTY*	3903920100B	05/21/1996	96–05–2406A	2
5	OH	MERCER COUNTY*	3903920100B	01/11/1996	96–05–274A	2
5	OH	MERCER COUNTY*	3903920100B	01/11/1996	96–05–510A	2
5	OH	MERCER COUNTY*	3903920100B	01/22/1996	96–05–674A	2
5	OH	MERCER COUNTY*	3903920100B	05/07/1996	96–05–978A	2
5	OH	MERCER COUNTY*	3903920100B	04/05/1996	96–05–980A	2
5	OH	MILLBURY, VILLAGE OF	3905860001B	02/09/1996	96–05–148A	1
5	OH	MONTGOMERY COUNTY*	3907750035C	03/12/1996	95–05–2370A	1
5	OH	MONTGOMERY COUNTY*	3907750040C	05/24/1996	96–05–027P	5
5	OH	MONTGOMERY COUNTY*	3907750040C	04/27/1996	96–05–071P	6
5	OH	MONTGOMERY COUNTY*	3907750040C	06/24/1996	96–05–1630A	2
5	OH	MONTGOMERY COUNTY*	3907750060B	06/20/1996	96–05–2276A	2
5	OH	NEWARK,CITY OF	3903350005D	04/09/1996	96–05–332A	1
5	OH	NORTH OLMSTED, CITY OF	3901200002C	03/29/1996	96–05–472A	2
5	OH	NORTH RIDGEVILLE, CITY OF	3903520005C	04/11/1996	96–05–1508A	2
5	OH	NORTH RIDGEVILLE, CITY OF	3903520005C	04/29/1996	96–05–2178A	2
5	OH	OTTAWA COUNTY*	3904320050B	02/21/1996	96–05–974A	2
5	OH	OTTAWA COUNTY*	3904320050B	03/26/1996	96–05–976A	2
5	OH	OTTAWA COUNTY*	3904320200B	04/25/1996	96–05–2072A	2
5	OH	OTTAWA HILLS, VILLAGE OF	3903620001B	06/14/1996	95–05–2016A	1
5	OH	OTTAWA, VILLAGE OF	3904720002C	01/10/1996	95–05–2024A	1
5	OH	OTTAWA, VILLAGE OF	3904720002C	04/10/1996	96–05–1276A	2
5	OH	PAINESVILLE, CITY OF	390319 A	03/08/1996	96–05–1278A	2
5	OH	PAULDING COUNTY*	3907770025D	04/15/1996	96–05–700A	2
5	OH	PORTAGE COUNTY*	390453 C	06/06/1996	96–05–1846A	1
5	OH	ROSS COUNTY*	3904800125B	02/09/1996	96–05–340A	1
5	OH	SANDUSKY, CITY OF	390156 B	05/28/1996	95–05–2262A	2
5	OH	SANDUSKY, CITY OF	390156 B	03/04/1996	95–05–946A	2
5	OH	SENECA COUNTY*	3907790040B	05/20/1996	96–05–1274A	2
5	OH	ST. MARYS, CITY OF	39011C0080C	06/24/1996	96–05–2410A	2
5	OH	ST. MARYS, CITY OF	39011C0080C	06/14/1996	96–05–2468A	1
5	OH	STOW, CITY OF	3905320005B	06/04/1996	96–05–2274A	2
5	OH	TOLEDO, CITY OF	3953730005A	01/29/1996	96–05–578A	2
5	OH	TOLEDO, CITY OF	3953730010A	01/11/1996	95–05–2174A	2
5	OH	TOLEDO, CITY OF	3953730010A	05/03/1996	96–05–2284A	2
5	OH	TOLEDO, CITY OF	3953730010A	06/04/1996	96–05–2290A	1
5	OH	TOLEDO, CITY OF	3953730010A	03/06/1996	96–05–572A	2
5	OH	TOLEDO, CITY OF	3953730010A	01/11/1996	96–05–750A	2
5	OH	TOLEDO, CITY OF	3953730020A	01/31/1996	95–05–2412A	2
5	OH	TOLEDO, CITY OF	3953730020A	06/25/1996	96–05–1522A	2

Region	State	Community name	Panel number	Effective date	Case No.	Determination
5	OH	TUSCARAWAS COUNTY*	3907820050B	04/23/1996	96–05–2062A	2
5	OH	TUSCARAWAS COUNTY*	3907820140B	05/21/1996	96–05–1986A	2
5	OH	UNION COUNTY*	3908080150B	04/03/1996	96–05–968A	2
5	OH	WAPAKONETA, CITY OF	39011C0105C	04/05/1996	96–05–850A	2
5	OH	WARREN COUNTY*	3907570065C	05/28/1996	96–05–944A	2
5	OH	WARREN COUNTY*	3907570085C	01/31/1996	96–05–708A	2
5	OH	WASHINGTON COUNTY*	3905660125B	01/17/1996	95–05–2586A	2
5	OH	WASHINGTON COUNTY*	3905660125B	05/09/1996	96–05–1430A	2
5	OH	WASHINGTON COUNTY*	3905660125B	05/09/1996	96–05–1432A	2
5	OH	WASHINGTON COUNTY*	3905660125B	05/09/1996	96–05–1642A	2
5	OH	WATERVILLE, VILLAGE OF	3906370003C	03/22/1996	96–05–1336A	2
5	OH	WICKLIFFE, CITY OF	3903210002A	03/04/1996	96–05–284A	1
5	OH	WOOD COUNTY*	3908090012C	04/29/1996	96–05–1416A	1
5	OH	WOOD COUNTY*	3908090012C	05/09/1996	96–05–1580A	1
5	OH	WOOD COUNTY*	3908090012C	06/18/1996	96–05–954A	1
5	OH	WOOD COUNTY*	3908090016B	04/29/1996	96–05–1388A	1
5	OH	WOOD COUNTY*	3908090016B	05/03/1996	96–05–1520A	1
5	OH	WOOD COUNTY*	3908090016B	06/04/1996	96–05–1804A	1
5	OH	WOOD COUNTY*	3908090105B	02/20/1996	95–05–2480A	1
5	OH	WYANDOT COUNTY*	3907870150C	05/02/1996	96–05–988A	2
5	OH	XENIA, CITY OF	3901970005B	05/13/1996	96–05–592A	2
5	WI	BARRON COUNTY*	5505680225B	06/24/1996	96–05–1268A	2
5	WI	BROOKFIELD, CITY OF	5504780010B	05/14/1996	96–05–2576A	1
5	WI	BROOKFIELD, CITY OF	5504780010B	04/24/1996	96–05–914A	1
5	WI	COLUMBIA COUNTY*	5505810050C	05/07/1996	96–05–1526A	2
5	WI	COLUMBIA COUNTY*	5505810050C	03/12/1996	96–05–336A	1
5	WI	COLUMBIA COUNTY*	5505810175C	05/09/1996	96–05–1738A	2
5	WI	CROSS PLAINS, VILLAGE OF	5500810001B	05/20/1996	96–05–830A	1
5	WI	DE FOREST, VILLAGE OF	5500820005C	05/01/1996	96–05–2018A	2
5	WI	DE PERE, CITY OF	5500210005C	04/09/1996	96–05–514A	2
5	WI	EAU CLAIRE, CITY OF	5501280015C	02/07/1996	96–05–694A	2
5	WI	FOND DU LAC COUNTY*	5501310070C	04/01/1996	96–05–082A	2
5	WI	FOND DU LAC COUNTY*	5501310080B	06/14/1996	96–05–1724A	1
5	WI	FOND DU LAC COUNTY*	5501310185B	01/31/1996	96–05–112A	2
5	WI	FOND DU LAC, CITY OF	5501360005D	05/06/1996	96–05–2114A	2
5	WI	FREDONIA, VILLAGE OF	55089C0017D	02/20/1996	96–05–214A	2
5	WI	GLENDALE, CITY OF	5502750005C	01/11/1996	95–05–2554A	2
5	WI	GREEN BAY, CITY OF	5500220010E	05/01/1996	96–05–712A	2
5	WI	GREEN BAY, CITY OF	5500220020E	03/08/1996	96–05–442A	2
5	WI	GREEN BAY, CITY OF	5500220020E	03/20/1996	96–05–762A	2
5	WI	GREEN LAKE COUNTY*	5501650003A	02/20/1996	95–05–2712A	2
5	WI	GREEN LAKE COUNTY*	5501650004A	01/25/1996	96–05–124A	2
5	WI	GREEN LAKE COUNTY*	5501650004A	05/20/1996	96–05–1666A	2
5	WI	HALES CORNERS, VILLAGE OF	5505240001C	06/20/1996	96–05–1082A	2
5	WI	IOLA, VILLAGE OF	550497 B	05/28/1996	96–05–1888A	2
5	WI	JEFFERSON COUNTY*	5501910125B	03/25/1996	96–05–692A	17
5	WI	JEFFERSON COUNTY*	5501910175B	05/06/1996	96–05–2184A	2
5	WI	JEFFERSON COUNTY*	5501910175B	06/24/1996	96–05–2564A	2
5	WI	KEWASKUM, VILLAGE OF	5504740001C	04/29/1996	96–05–724A	2
5	WI	LA CROSSE COUNTY*	5502170120A	04/09/1996	95–05–1346A	1
5	WI	LA CROSSE COUNTY*	5502170120A	03/06/1996	96–05–146A	1
5	WI	LA CROSSE, CITY OF	5555620005B	06/14/1996	95–05–2356A	1
5	WI	LA CROSSE, CITY OF	5555620005B	04/24/1996	96–05–418A	1
5	WI	MENASHA, CITY OF	5505100005C	06/14/1996	96–05–1886A	2
5	WI	MEQUON, CITY OF	55089C0079D	05/13/1996	95–05–2698A	2
5	WI	MEQUON, CITY OF	55089C0090D	01/19/1996	95–05–2256A	2
5	WI	MERRILL, CITY OF	555565 A	01/11/1996	96–05–324A	2
5	WI	MUSKEGO, CITY OF	5504860001B	01/29/1996	96–05–420A	2
5	WI	NEENAH, CITY OF	5505090002B	01/29/1996	96–05–716A	2
5	WI	NEKOOSA, CITY OF	55141C0410E	05/03/1996	96–05–099P	6
5	WI	NEKOOSA, CITY OF	55141C0420E	05/03/1996	96–05–099P	6
5	WI	NEW BERLIN, CITY OF	5504870004D	06/20/1996	96–05–2560A	2
5	WI	OCONTO, CITY OF	5502970002B	04/03/1996	96–05–022A	2
5	WI	ONEIDA COUNTY*	55085C0200B	02/09/1996	96–05–142A	2
5	WI	OSHKOSH, CITY OF	5505110010D	06/11/1996	96–05–1394A	2
5	WI	OUTAGAMIE COUNTY*	5503020084C	02/22/1996	96–05–1264A	2
5	WI	OUTAGAMIE COUNTY*	5503020084C	06/20/1996	96–05–2458A	2
5	WI	OUTAGAMIE COUNTY*	5503020130B	03/14/1996	96–05–576A	2
5	WI	PIERCE COUNTY*	5555710100C	03/06/1996	96–05–990A	1
5	WI	PIERCE COUNTY*	5555710125C	02/28/1996	96–05–684A	17
5	WI	PIERCE COUNTY*	5555710175C	06/06/1996	96–05–2690A	2
5	WI	PIERCE COUNTY*	5555710175C	03/08/1996	96–05–992A	2
5	WI	PRICE COUNTY*	5503430200C	01/17/1996	96–05–512A	2

Region	State	Community name	Panel number	Effective date	Case No.	Determination
5	WI	RACINE COUNTY*	5503470010B	05/07/1996	96–05–1078A	2
5	WI	RACINE COUNTY*	5503470010B	04/03/1996	96–05–1202A	1
5	WI	RICE LAKE, CITY OF	5500160005C	02/07/1996	96–05–782A	2
5	WI	SAUKVILLE, VILLAGE OF	55089C0056D	05/20/1996	96–05–2092A	2
5	WI	SPRING VALLEY, VILLAGE OF	5503310005C	04/03/1996	96–05–756A	2
5	WI	ST. CROIX COUNTY*	555578 B	02/20/1996	96–05–728A	2
5	WI	STOCKHOLM, VILLAGE OF	555581 B	03/12/1996	96–05–628A	2
5	WI	SUSSEX, VILLAGE OF	5504900001C	05/20/1996	96–05–2096A	2
5	WI	THIENSVILLE, CITY OF	55089C0079D	06/11/1996	96–05–1072A	2
5	WI	WALPACA COUNTY*	5504920115A	04/09/1996	96–05–1470A	2
5	WI	WASHINGTON COUNTY*	5504710025B	04/22/1996	96–05–310A	1
5	WI	WASHINGTON COUNTY*	5504710040B	01/29/1996	96–05–180A	2
5	WI	WASHINGTON COUNTY*	5504710050B	03/06/1996	96–05–374A	2
5	WI	WASHINGTON COUNTY*	5504710080B	05/13/1996	96–05–1776A	2
5	WI	WATERTOWN, CITY OF	5501070005C	02/20/1996	96–05–680A	2
5	WI	WAUKESHA COUNTY*	5504760010B	05/14/1996	96–05–1844A	1
5	WI	WAUKESHA COUNTY*	5504760015B	01/11/1996	95–05–2076A	2
5	WI	WAUKESHA COUNTY*	5504760040C	05/22/1996	96–05–1094A	2
5	WI	WAUKESHA COUNTY*	5504760040C	04/29/1996	96–05–1828A	2
5	WI	WAUKESHA COUNTY*	5504760055B	01/17/1996	96–05–608A	2
5	WI	WAUKESHA COUNTY*	5504760120B	05/20/1996	96–05–2280A	2
5	WI	WAUPUN, CITY OF	5501080001E	01/31/1996	96–05–702A	2
5	WI	WINNEBAGO COUNTY*	5505370025C	05/07/1996	96–05–1494A	2
5	WI	WINNEBAGO COUNTY*	5505370050C	06/10/1996	96–05–2016A	1
5	WI	WINNEBAGO COUNTY*	5505370050C	05/14/1996	96–05–2330A	2
5	WI	WINNEBAGO COUNTY*	5505370050C	01/30/1996	96–05–344A	2
5	WI	WINNEBAGO COUNTY*	5505370075C	02/20/1996	96–05–996A	2
5	WI	WINNEBAGO COUNTY*	5505370100C	06/18/1996	96–05–1468A	2
5	WI	WINNEBAGO COUNTY*	5505370100C	06/20/1996	96–05–2392A	2
5	WI	WINNECONNE, VILLAGE OF	5505120001C	05/13/1996	96–05–1772A	2
5	WI	WINNECONNE, VILLAGE OF	5505120001C	05/20/1996	96–05–2046A	2
6	AR	BENTON COUNTY*	05007C0252E	02/12/1996	R6–96–02–091	2
6	AR	BENTONVILLE, CITY OF	05007C0155F	02/22/1996	R6–96–02–245	2
6	AR	CABOT, CITY OF	0503090005C	02/16/1996	96–06–104A	2
6	AR	CAMDEN, CITY OF	0501630004A	02/21/1996	R6–96–02–181	2
6	AR	CAMDEN, CITY OF	0501630004A	04/12/1996	R6–96–04–074	2
6	AR	CARROLL COUNTY	050024 A	02/15/1996	R6–96–02–184	2
6	AR	CLAY COUNTY*	504230000	01/18/1996	R6–96–01–109	8
6	AR	CONWAY, CITY OF	05045C0130F	04/11/1996	R6–96–04–072	8
6	AR	CONWAY, CITY OF	05045C0140E	03/06/1996	R6–96–02–301	1
6	AR	CRAIGHEAD COUNTY	05031C0050C	02/12/1996	R6–96–02–094	8
6	AR	DE QUEEN, CITY OF	050204 B	06/19/1996	R6–96–06–105	2
6	AR	DERMOTT, CITY OF	0500260005C	03/19/1996	R6–96–01–211	2
6	AR	ENGLAND, CITY OF	0501330001C	03/21/1996	R6–96–03–168	2
6	AR	ENGLAND, CITY OF	0501330001C	03/21/1996	R6–96–03–199	2
6	AR	ENGLAND, CITY OF	0501330001C	06/13/1996	R6–96–06–000	2
6	AR	FAYETTEVILLE, CITY OF	05143C0085C	06/18/1996	R6–96–06–135	2
6	AR	FORT SMITH, CITY OF	0550130010D	04/12/1996	96–06–147A	2
6	AR	FORT SMITH, CITY OF	0550130015D	04/18/1996	96–06–160A	1
6	AR	HOT SPRINGS, CITY OF	05051C0152C	05/08/1996	96–06–032P	5
6	AR	HOT SPRINGS, CITY OF	05051C0156C	05/08/1996	96–06–032P	5
6	AR	JACKSONVILLE, CITY OF	0501800005E	01/10/1996	R6–96–01–019	2
6	AR	JACKSONVILLE, CITY OF	0501800005E	01/22/1996	R6–96–01–216	8
6	AR	JACKSONVILLE, CITY OF	0501800005E	02/12/1996	R6–96–02–054	2
6	AR	JACKSONVILLE, CITY OF	0501800005E	04/04/1996	R6–96–02–186	1
6	AR	JACKSONVILLE, CITY OF	0501800005E	03/14/1996	R6–96–03–092	2
6	AR	JACKSONVILLE, CITY OF	0501800005E	03/14/1996	R6–96–03–093	8
6	AR	JACKSONVILLE, CITY OF	0501800010E	01/10/1996	96–06–093A	1
6	AR	JACKSONVILLE, CITY OF	0501800010E	05/30/1996	96–06–304A	1
6	AR	JONESBORO, CITY OF	05031C0039C	03/11/1996	R6–96–03–053	2
6	AR	JONESBORO, CITY OF	05031C0131C	03/14/1996	R6–96–03–107	8
6	AR	JONESBORO, CITY OF	05031C0132C	05/24/1996	R6–96–05–241	8
6	AR	JONESBORO, CITY OF	05031C0132C	05/31/1996	R6–96–05–304	2
6	AR	LAWRENCE COUNTY	0504430150C	02/22/1996	R6–96–02–206	2
6	AR	LAWRENCE COUNTY	0504430150C	02/22/1996	R6–96–02–207	2
6	AR	LITTLE ROCK, CITY OF	0501810002E	03/06/1996	R6–96–02–309	2
6	AR	LITTLE ROCK, CITY OF	0501810002E	05/21/1996	R6–96–05–136	2
6	AR	LITTLE ROCK, CITY OF	0501810006E	01/24/1996	R6–96–01–251	2
6	AR	LITTLE ROCK, CITY OF	0501810006E	02/12/1996	R6–96–02–088	2
6	AR	LITTLE ROCK, CITY OF	0501810006E	03/21/1996	R6–96–03–172	2
6	AR	LITTLE ROCK, CITY OF	0501810006E	03/25/1996	R6–96–03–271	2
6	AR	LITTLE ROCK, CITY OF	0501810006E	05/24/1996	R6–96–05–106	2
6	AR	LITTLE ROCK, CITY OF	0501810007E	01/10/1996	R6–96–01–046	2

Region	State	Community name	Panel number	Effective date	Case No.	Determination
6	AR	LOGAN COUNTY*	0504470125C	03/21/1996	R6–96–03–174	2
6	AR	LOGAN COUNTY*	0504470125C	06/26/1996	R6–96–06–257	2
6	AR	LOGAN COUNTY*	0504470130C	05/23/1996	R6–96–05–214	2
6	AR	LONOKE COUNTY*	0504480060B	03/08/1996	R6–96–03–042	2
6	AR	LONOKE COUNTY*	0504480365B	06/20/1996	R6–96–06–201	2
6	AR	LONOKE COUNTY*	0504480400B	01/10/1996	R6–96–01–030	1
6	AR	NORTH LITTLE ROCK, CITY OF	0501820003D	01/22/1996	R6–96–01–209	2
6	AR	PERRY, TOWN OF	0502760001A	01/18/1996	R6–96–01–120	2
6	AR	PERRYVILLE, CITY OF	0503620005A	01/22/1996	R6–96–01–174	2
6	AR	PERRYVILLE, CITY OF	0503620005A	02/13/1996	R6–96–02–140	2
6	AR	POCAHONTAS, CITY OF	0501830003B	04/03/1996	R6–96–04–007	2
6	AR	ROGERS, CITY OF	05007C0155F	01/29/1996	R6–95–10–231	1
6	AR	ROGERS, CITY OF	05007C0155F	06/05/1996	R6–96–05–049	2
6	AR	ROGERS, CITY OF	05007C0155F	06/10/1996	R6–96–06–005	2
6	AR	ROGERS, CITY OF	05007C0155F	06/10/1996	R6–96–06–005	2
6	AR	ROGERS, CITY OF	05007C0155F	06/18/1996	R6–96–06–176	2
6	AR	ROGERS, CITY OF	05007C0155F	06/17/1996	R6–96–06–177	2
6	AR	RUSSELLVILLE, CITY OF	0501780005C	03/07/1996	R6–96–03–041	2
6	AR	SHERWOOD, CITY OF	0502350001E	02/22/1996	R6–96–02–000	2
6	AR	SHERWOOD, CITY OF	0502350001E	05/29/1996	R6–96–05–272	2
6	AR	SHERWOOD, CITY OF	0502350001E	06/20/1996	R6–96–06–166	2
6	AR	SHERWOOD, CITY OF	0502350002E	04/19/1996	R6–96–04–156	2
6	AR	STUTTGART, CITY OF	050002 B	02/13/1996	R6–96–02–142	2
6	AR	STUTTGART, CITY OF	050002 B	02/13/1996	R6–96–02–143	2
6	AR	STUTTGART, CITY OF	050002 B	04/11/1996	R6–96–04–065	2
6	AR	STUTTGART, CITY OF	050002 B	04/12/1996	R6–96–04–079	2
6	AR	STUTTGART, CITY OF	050002 B	05/22/1996	R6–96–05–235	2
6	AR	STUTTGART, CITY OF	500029999	01/10/1996	R6–96–01–053	2
6	AR	STUTTGART, CITY OF	500029999	06/04/1996	R6–96–05–327	2
6	AR	VAN BUREN, CITY OF	05033C0170F	06/20/1996	R6–96–06–163	2
6	AR	WASHINGTON COUNTY	05143C0090C	03/29/1996	R6–96–03–319	2
6	AR	WEST MEMPHIS, CITY OF	0500550006B	01/18/1996	R6–96–01–073	1
6	AR	YELL COUNTY*	0504690008A	03/13/1996	R6–96–03–087	2
6	LA	ABITA SPRINGS, TOWN OF	2201990002C	02/12/1996	R6–96–02–058	2
6	LA	ALEXANDRIA, CITY OF	2201460005E	04/18/1996	R6–96–04–131	2
6	LA	ALEXANDRIA, CITY OF	2201460010E	04/23/1996	R6–96–04–242	2
6	LA	ALEXANDRIA, CITY OF	2201460010E	05/29/1996	R6–96–05–284	2
6	LA	ALEXANDRIA, CITY OF	2201460010E	06/20/1996	R6–96–06–203	2
6	LA	ALLEN PARISH*	2200090175B	04/23/1996	R6–96–04–241	2
6	LA	ASCENSION PARISH*	2200130030C	01/10/1996	R6–96–01–031	2
6	LA	ASCENSION PARISH*	2200130030C	03/21/1996	R6–96–03–150	2
6	LA	ASCENSION PARISH*	2200130030C	04/08/1996	R6–96–04–090	2
6	LA	ASCENSION PARISH*	2200130035C	03/07/1996	96–06–194A	2
6	LA	ASCENSION PARISH*	2200130035C	05/29/1996	R6–96–05–264	2
6	LA	ASCENSION PARISH*	2200130045C	05/14/1996	96–06–156A	2
6	LA	ASCENSION PARISH*	2200130045C	01/26/1996	R6–96–01–000	2
6	LA	ASCENSION PARISH*	2200130045C	05/29/1996	R6–96–05–264	2
6	LA	ASCENSION PARISH*	2200130045C	06/18/1996	R6–96–06–021	2
6	LA	BOSSIER CITY, CITY OF	2200330005C	01/24/1996	R6–96–01–238	2
6	LA	BOSSIER CITY, CITY OF	2200330005C	02/05/1996	R6–96–02–010	2
6	LA	BOSSIER CITY, CITY OF	2200330005C	03/22/1996	R6–96–03–214	2
6	LA	BOSSIER CITY, CITY OF	2200330005C	05/31/1996	R6–96–05–313	2
6	LA	BOSSIER CITY, CITY OF	2200330005C	05/31/1996	R6–96–05–314	2
6	LA	BOSSIER CITY, CITY OF	2200330010C	01/31/1996	R6–96–01–283	2
6	LA	BOSSIER CITY, CITY OF	2200330020C	04/15/1996	R6–96–04–100	2
6	LA	BOSSIER CITY, CITY OF	2200330020C	04/29/1996	R6–96–04–288	2
6	LA	BOSSIER CITY, CITY OF	2200330030C	01/22/1996	R6–96–01–160	2
6	LA	BOSSIER CITY, CITY OF	2200330030C	01/31/1996	R6–96–01–284	2
6	LA	BOSSIER CITY, CITY OF	2200330030C	03/14/1996	R6–96–03–097	2
6	LA	BOSSIER CITY, CITY OF	2200330030C	04/05/1996	R6–96–04–035	2
6	LA	BOSSIER CITY, CITY OF	2200330030C	04/11/1996	R6–96–04–054	2
6	LA	BOSSIER CITY, CITY OF	2200330030C	04/22/1996	R6–96–04–163	2
6	LA	BOSSIER CITY, CITY OF	2200330030C	04/23/1996	R6–96–04–246	2
6	LA	BOSSIER CITY, CITY OF	2200330030C	04/23/1996	R6–96–04–248	2
6	LA	BOSSIER CITY, CITY OF	2200330030C	05/16/1996	R6–96–05–093	2
6	LA	BOSSIER CITY, CITY OF	2200330030C	05/21/1996	R6–96–05–139	2
6	LA	BOSSIER CITY, CITY OF	2200330030C	05/23/1996	R6–96–05–243	2
6	LA	BOSSIER CITY, CITY OF	2200330030C	05/23/1996	R6–96–05–244	2
6	LA	BOSSIER CITY, CITY OF	2200330030C	06/17/1996	R6–96–06–084	2
6	LA	BOSSIER PARISH*	2200310285B	01/22/1996	R6–96–01–161	2
6	LA	BOSSIER PARISH*	2200310285B	02/05/1996	R6–96–02–024	2
6	LA	BOSSIER PARISH*	2200310285B	02/05/1996	R6–96–02–025	2
6	LA	BOSSIER PARISH*	2200310285B	02/05/1996	R6–96–02–026	2

Region	State	Community name	Panel number	Effective date	Case No.	Determination
6	LA	BOSSIER PARISH*	2200310285B	03/06/1996	R6–96–02–313	2
6	LA	BOSSIER PARISH*	2200310285B	03/21/1996	R6–96–03–183	2
6	LA	BOSSIER PARISH*	2200310285B	03/21/1996	R6–96–03–184	2
6	LA	BOSSIER PARISH*	2200310285B	04/22/1996	R6–96–04–162	2
6	LA	BOSSIER PARISH*	2200310285B	04/23/1996	R6–96–04–245	2
6	LA	BOSSIER PARISH*	2200310285B	05/16/1996	R6–96–05–095	2
6	LA	BOSSIER PARISH*	2200310285B	05/16/1996	R6–96–05–096	2
6	LA	BOSSIER PARISH*	2200310285B	05/21/1996	R6–96–05–118	2
6	LA	BOSSIER PARISH*	2200310285B	05/23/1996	R6–96–05–212	8
6	LA	BOSSIER PARISH*	2200310285B	05/23/1996	R6–96–05–238	2
6	LA	BOSSIER PARISH*	2200310285B	05/31/1996	R6–96–05–303	1
6	LA	BOSSIER PARISH*	2200310285B	06/14/1996	R6–96–06–085	2
6	LA	BOSSIER PARISH*	2200310285B	06/14/1996	R6–96–06–086	2
6	LA	BOSSIER PARISH*	2200310285B	06/14/1996	R6–96–06–126	2
6	LA	BOSSIER PARISH*	2200310295B	05/21/1996	R6–96–05–195	1
6	LA	BOSSIER PARISH*	2200310295B	06/17/1996	R6–96–06–087	2
6	LA	BOSSIER PARISH*	2200310315B	02/12/1996	R6–96–02–096	2
6	LA	BOSSIER PARISH*	2200310315B	03/06/1996	R6–96–02–278	2
6	LA	BOSSIER PARISH*	2200310315B	05/16/1996	R6–96–05–094	2
6	LA	BOSSIER PARISH*	2200310395B	01/31/1996	R6–96–01–285	2
6	LA	BOSSIER PARISH*	2200310435B	06/14/1996	R6–96–06–077	2
6	LA	BOSSIER PARISH*	2200310475B	05/17/1996	R6–96–05–071	2
6	LA	CADDO PARISH*	2203610170B	01/22/1996	R6–96–01–229	2
6	LA	CADDO PARISH*	2203610170B	04/08/1996	R6–96–04–048	2
6	LA	CALCASIEU PARISH*	2200370225C	04/16/1996	R6–96–04–126	2
6	LA	CALCASIEU PARISH*	2200370250C	02/07/1996	R6–95–12–033	2
6	LA	CALCASIEU PARISH*	2200370250C	02/07/1996	R6–95–12–091	2
6	LA	CALCASIEU PARISH*	2200370250C	03/15/1996	R6–96–03–105	2
6	LA	CALCASIEU PARISH*	2200370250C	04/16/1996	R6–96–04–132	1
6	LA	CALCASIEU PARISH*	2200370250C	05/16/1996	R6–96–05–039	1
6	LA	CALCASIEU PARISH*	2200370250C	05/21/1996	R6–96–05–197	2
6	LA	CALCASIEU PARISH*	2200370250C	06/18/1996	R6–96–06–167	2
6	LA	CALCASIEU PARISH*	2200370275C	06/11/1996	R6–96–06–015	1
6	LA	CALCASIEU PARISH*	2200370350B	02/14/1996	R6–96–02–153	1
6	LA	CALCASIEU PARISH*	2200370350B	03/22/1996	R6–96–03–175	1
6	LA	CALCASIEU PARISH*	2200370350B	05/16/1996	R6–96–05–088	2
6	LA	CALCASIEU PARISH*	2200370625B	04/24/1996	R6–96–04–258	2
6	LA	CARENCRO, TOWN OF	22055C0025G	05/06/1996	R6–96–05–034	2
6	LA	DERIDDER, CITY OF	2200270010D	04/22/1996	R6–96–04–208	2
6	LA	EAST BATON ROUGE PARISH	2200580090D	05/09/1996	96–06–295A	2
6	LA	EAST BATON ROUGE PARISH	2200580095D	01/24/1996	R6–96–01–024	2
6	LA	EAST BATON ROUGE PARISH	2200580100D	02/06/1996	96–06–028A	1
6	LA	EAST BATON ROUGE PARISH	2200580100D	05/06/1996	96–06–269A	1
6	LA	EAST BATON ROUGE PARISH	2200580100D	03/06/1996	R6–96–02–175	2
6	LA	EAST BATON ROUGE PARISH	2200580100D	04/01/1996	R6–96–03–346	2
6	LA	EAST BATON ROUGE PARISH	2200580100D	06/20/1996	R6–96–06–197	2
6	LA	EAST BATON ROUGE PARISH	2200580105D	06/11/1996	96–06–268A	2
6	LA	EAST BATON ROUGE PARISH	2200580110D	02/20/1996	96–06–128A	2
6	LA	EAST BATON ROUGE PARISH	2200580110D	02/22/1996	96–06–166A	1
6	LA	EAST BATON ROUGE PARISH	2200580110D	03/05/1996	96–06–189A	2
6	LA	EAST BATON ROUGE PARISH	2200580110D	04/30/1996	96–06–249A	1
6	LA	EAST BATON ROUGE PARISH	2200580110D	05/31/1996	96–06–279A	1
6	LA	EAST BATON ROUGE PARISH	2200580110D	05/01/1996	R6–96–04–317	2
6	LA	EAST BATON ROUGE PARISH	2200580115D	06/05/1996	96–06–139A	1
6	LA	EAST BATON ROUGE PARISH	2200580115D	03/07/1996	96–06–180A	2
6	LA	EAST BATON ROUGE PARISH	2200580115D	05/16/1996	R6–96–04–113	2
6	LA	EAST BATON ROUGE PARISH	2200580125C	06/05/1996	96–06–139A	1
6	LA	EAST BATON ROUGE PARISH	2200580125C	03/07/1996	96–06–180A	2
6	LA	EAST BATON ROUGE PARISH	2200580125C	01/18/1996	R6–95–12–097	2
6	LA	EAST BATON ROUGE PARISH	2200580125C	04/05/1996	R6–96–03–137	2
6	LA	EVANGELINE PARISH*	2200640002B	02/13/1996	R6–96–02–150	8
6	LA	EVANGELINE PARISH*	2200640006B	03/06/1996	R6–96–02–305	2
6	LA	EVANGELINE PARISH*	2200640007B	02/21/1996	R6–96–02–135	2
6	LA	EVANGELINE PARISH*	2200640007B	05/16/1996	R6–96–03–256	2
6	LA	EVANGELINE PARISH*	2200640007B	06/18/1996	R6–96–06–174	8
6	LA	HAMMOND, CITY OF	2202080002C	06/26/1996	R6–96–04–115	2
6	LA	HAMMOND, CITY OF	2202080003B	01/16/1996	R6–96–01–025	2
6	LA	IBERIA PARISH*	2200780150C	03/27/1996	R6–96–03–311	2
6	LA	IBERIA PARISH*	2200780150C	05/16/1996	R6–96–05–041	2
6	LA	JEFFERSON PARISH*	22051C0030E	05/24/1996	R6–96–05–107	2
6	LA	KENNER, CITY OF	22051C0030E	04/25/1996	R6–96–04–271	2
6	LA	LAFAYETTE PARISH*	22055C0010G	01/22/1996	R6–96–01–163	2
6	LA	LAFAYETTE PARISH*	22055C0025G	02/05/1996	R6–96–01–000	2

Region	State	Community name	Panel number	Effective date	Case No.	Determination
6	LA	LAFAYETTE PARISH*	22055C0025G	04/12/1996	R6–96–04–082	2
6	LA	LAFAYETTE PARISH*	22055C0025G	05/17/1996	R6–96–05–089	2
6	LA	LAFAYETTE PARISH*	22055C0040G	05/21/1996	R6–96–05–014	2
6	LA	LAFAYETTE PARISH*	22055C0060G	04/25/1996	R6–96–04–279	8
6	LA	LAFAYETTE PARISH*	22055C0065G	03/15/1996	96–06–120A	1
6	LA	LAFAYETTE PARISH*	22055C0065G	02/05/1996	R6–96–01–274	2
6	LA	LAFAYETTE PARISH*	22055C0065G	03/07/1996	R6–96–02–300	8
6	LA	LAFAYETTE PARISH*	22055C0065G	03/25/1996	R6–96–03–202	2
6	LA	LAFAYETTE PARISH*	22055C0065G	04/23/1996	R6–96–04–239	2
6	LA	LAFAYETTE PARISH*	22055C0065G	05/02/1996	R6–96–04–318	2
6	LA	LAFAYETTE PARISH*	22055C0065G	05/02/1996	R6–96–04–322	2
6	LA	LAFAYETTE PARISH*	22055C0065G	06/11/1996	R6–96–05–037	2
6	LA	LAFAYETTE PARISH*	22055C0065G	06/11/1996	R6–96–06–013	2
6	LA	LAFAYETTE PARISH*	22055C0070G	03/14/1996	R6–96–03–104	2
6	LA	LAFAYETTE PARISH*	22055C0080G	02/06/1996	96–06–020A	2
6	LA	LAFAYETTE, CITY OF	22055C0040G	04/23/1996	R6–96–04–243	2
6	LA	LAFAYETTE, CITY OF	22055C0045G	02/16/1996	96–06–161A	1
6	LA	LAFAYETTE, CITY OF	22055C0045G	03/19/1996	R6–96–02–196	2
6	LA	LAFAYETTE, CITY OF	22055C0045G	04/29/1996	R6–96–04–283	2
6	LA	LAFAYETTE, CITY OF	22055C0045G	05/21/1996	R6–96–05–141	2
6	LA	LAFAYETTE, CITY OF	22055C0065G	02/26/1996	R6–96–02–209	2
6	LA	LAFAYETTE, CITY OF	22055C0065G	05/23/1996	R6–96–05–248	2
6	LA	LAKE ARTHUR, TOWN OF	2200990001B	06/20/1996	R6–96–06–207	2
6	LA	LAKE CHARLES, CITY OF	2200400010D	02/12/1996	R6–96–02–095	8
6	LA	LAKE CHARLES, CITY OF	2200400010D	05/16/1996	R6–96–04–240	2
6	LA	LIVINGSTON PARISH*	2201130025B	04/23/1996	R6–96–04–185	8
6	LA	LIVINGSTON PARISH*	2201130025B	04/23/1996	R6–96–04–186	8
6	LA	LIVINGSTON PARISH*	2201130025B	04/23/1996	R6–96–04–187	8
6	LA	LIVINGSTON PARISH*	2201130025B	04/23/1996	R6–96–04–210	2
6	LA	LIVINGSTON PARISH*	2201130025B	05/01/1996	R6–96–04–325	2
6	LA	LIVINGSTON PARISH*	2201130025B	05/17/1996	R6–96–05–063	2
6	LA	LIVINGSTON PARISH*	2201130025B	05/17/1996	R6–96–05–064	2
6	LA	LIVINGSTON PARISH*	2201130025B	05/21/1996	R6–96–05–119	8
6	LA	LIVINGSTON PARISH*	2201130025B	06/11/1996	R6–96–06–014	8
6	LA	LIVINGSTON PARISH*	2201130050B	03/26/1996	R6–96–03–217	2
6	LA	LIVINGSTON PARISH*	2201130100B	02/05/1996	R6–96–01–011	2
6	LA	LIVINGSTON PARISH*	2201130100B	05/17/1996	R6–96–05–000	2
6	LA	LIVINGSTON PARISH*	2201130125B	04/12/1996	R6–96–04–073	2
6	LA	MINDEN, CITY OF	2202370005D	06/20/1996	R6–96–06–049	2
6	LA	OIL CITY, TOWN OF	2202620005B	03/04/1996	R6–96–03–000	2
6	LA	OUACHITA PARISH*	22073C0050E	03/14/1996	R6–96–03–109	2
6	LA	OUACHITA PARISH*	22073C0075E	03/26/1996	R6–96–03–206	2
6	LA	RAPIDES PARISH*	2201450140C	06/17/1996	R6–96–06–101	8
6	LA	RAPIDES PARISH*	2201450250B	06/04/1996	R6–96–05–309	2
6	LA	RUSTON, CITY OF	2203470001C	03/07/1996	R6–96–02–282	2
6	LA	SCOTT, CITY OF	22055C0040G	05/23/1996	R6–96–05–224	2
6	LA	SCOTT, CITY OF	22055C0040G	06/14/1996	R6–96–06–128	2
6	LA	SCOTT, CITY OF	22055C0045G	02/22/1996	R6–96–02–198	2
6	LA	SHREVEPORT, CITY OF	2200360007C	04/18/1996	R6–96–04–111	2
6	LA	SHREVEPORT, CITY OF	2200360008C	01/22/1996	R6–96–01–162	2
6	LA	SHREVEPORT, CITY OF	2200360008C	04/23/1996	R6–96–04–244	2
6	LA	SHREVEPORT, CITY OF	2200360015D	01/10/1996	R6–96–01–042	2
6	LA	SHREVEPORT, CITY OF	2200360019C	03/07/1996	96–06–170A	1
6	LA	SHREVEPORT, CITY OF	2200360028D	02/08/1996	R6–96–01–036	2
6	LA	SHREVEPORT, CITY OF	2200360028D	02/08/1996	R6–96–01–037	2
6	LA	SHREVEPORT, CITY OF	2200360028D	01/10/1996	R6–96–01–043	2
6	LA	SHREVEPORT, CITY OF	2200360028D	02/08/1996	R6–96–01–226	2
6	LA	SHREVEPORT, CITY OF	2200360028D	02/08/1996	R6–96–01–227	2
6	LA	SHREVEPORT, CITY OF	2200360028D	02/22/1996	R6–96–02–204	2
6	LA	SHREVEPORT, CITY OF	2200360028D	03/06/1996	R6–96–02–240	2
6	LA	SHREVEPORT, CITY OF	2200360028D	03/11/1996	R6–96–02–312	2
6	LA	SHREVEPORT, CITY OF	2200360028D	03/15/1996	R6–96–03–081	2
6	LA	SHREVEPORT, CITY OF	2200360028D	03/21/1996	R6–96–03–164	2
6	LA	SHREVEPORT, CITY OF	2200360028D	03/21/1996	R6–96–03–170	2
6	LA	SHREVEPORT, CITY OF	2200360028D	03/21/1996	R6–96–03–170	2
6	LA	SHREVEPORT, CITY OF	2200360028D	03/21/1996	R6–96–03–171	2
6	LA	SHREVEPORT, CITY OF	2200360028D	03/27/1996	R6–96–03–304	2
6	LA	SHREVEPORT, CITY OF	2200360028D	04/22/1996	R6–96–04–164	2
6	LA	SHREVEPORT, CITY OF	2200360028D	04/23/1996	R6–96–04–202	2
6	LA	SHREVEPORT, CITY OF	2200360028D	05/02/1996	R6–96–05–003	2
6	LA	SHREVEPORT, CITY OF	2200360028D	05/31/1996	R6–96–05–268	2
6	LA	SHREVEPORT, CITY OF	2200360028D	06/10/1996	R6–96–06–018	1
6	LA	SHREVEPORT, CITY OF	2200360028D	06/14/1996	R6–96–06–104	2

Region	State	Community name	Panel number	Effective date	Case No.	Determination
6	LA	SHREVEPORT, CITY OF	2200360029D	02/09/1996	R6–96–01–022	1
6	LA	SHREVEPORT, CITY OF	2200360029D	03/11/1996	R6–96–03–050	2
6	LA	SHREVEPORT, CITY OF	2200360029D	04/08/1996	R6–96–04–049	8
6	LA	SHREVEPORT, CITY OF	2200360029D	05/02/1996	R6–96–04–350	2
6	LA	SHREVEPORT, CITY OF	2200360029D	06/19/1996	R6–96–06–197	2
6	LA	SHREVEPORT, CITY OF	2200360030D	03/15/1996	R6–96–03–127	1
6	LA	SHREVEPORT, CITY OF	2200360030D	04/22/1996	R6–96–04–178	2
6	LA	SHREVEPORT, CITY OF	2200360030D	05/21/1996	R6–96–05–150	8
6	LA	SHREVEPORT, CITY OF	2200360030D	05/31/1996	R6–96–05–285	2
6	LA	SHREVEPORT, CITY OF	2200360033D	06/27/1996	95–06–419A	1
6	LA	SHREVEPORT, CITY OF	2200360033D	01/10/1996	R6–96–01–027	1
6	LA	SHREVEPORT, CITY OF	2200360033D	02/13/1996	R6–96–02–154	1
6	LA	SHREVEPORT, CITY OF	2200360033D	04/03/1996	R6–96–04–006	1
6	LA	SHREVEPORT, CITY OF	2200360033D	05/29/1996	R6–96–05–283	1
6	LA	SHREVEPORT, CITY OF	2200360034D	02/22/1996	R6–96–01–040	2
6	LA	SHREVEPORT, CITY OF	2200360034D	01/22/1996	R6–96–01–228	2
6	LA	SHREVEPORT, CITY OF	2200360034D	01/24/1996	R6–96–01–242	2
6	LA	SHREVEPORT, CITY OF	2200360034D	03/19/1996	R6–96–03–173	2
6	LA	SHREVEPORT, CITY OF	2200360034D	03/22/1996	R6–96–03–215	2
6	LA	SHREVEPORT, CITY OF	2200360035D	04/12/1996	R6–96–04–069	2
6	LA	SLIDELL, CITY OF	2202040005B	06/18/1996	R6–96–06–082	2
6	LA	ST. MARTIN PARISH*	2201780225B	06/18/1996	R6–96–06–182	2
6	LA	ST. MARY PARISH*	2201920125C	05/13/1996	R6–96–05–000	2
6	LA	ST. MARY PARISH*	2201920150C	03/21/1996	R6–96–01–000	2
6	LA	ST. TAMMANY PARISH*	2252050240E	05/29/1996	R6–96–05–286	2
6	LA	ST. TAMMANY PARISH*	2252050440C	05/29/1996	R6–96–05–251	2
6	LA	SULPHUR, CITY OF	2200410001B	02/21/1996	R6–96–02–130	2
6	LA	SULPHUR, CITY OF	2200410002B	04/23/1996	R6–96–04–207	2
6	LA	TALLULAH, CITY OF	2201260001C	02/26/1996	R6–96–02–239	8
6	LA	TALLULAH, CITY OF	2201260001C	03/29/1996	R6–96–03–309	2
6	LA	TANGIPAHOA PARISH*	2202060175D	05/23/1996	R6–96–05–245	2
6	LA	TANGIPAHOA PARISH*	2202060225D	01/22/1996	R6–96–01–208	2
6	LA	TANGIPAHOA PARISH*	2202060235D	05/02/1996	96–06–215A	2
6	LA	WALKER, TOWN OF	2201210001A	04/12/1996	R6–96–04–083	2
6	LA	YOUNGSVILLE, VILLAGE OF	22055C0070G	05/02/1996	96–06–226A	2
6	LA	YOUNGSVILLE, VILLAGE OF	22055C0070G	03/07/1996	R6–96–02–299	2
6	LA	ZACHARY, CITY OF	2200610005B	01/23/1996	96–06–056A	2
6	NM	ALAMOGORDO, CITY OF	3500450004B	04/01/1996	R6–96–03–292	2
6	NM	ALAMOGORDO, CITY OF	3500450006C	04/19/1996	R6–96–02–063	2
6	NM	ALBUQUERQUE, CITY OF	3500020002C	03/25/1996	96–06–127P	6
6	NM	ALBUQUERQUE, CITY OF	3500020002C	04/12/1996	R6–96–04–081	2
6	NM	ALBUQUERQUE, CITY OF	3500020008C	01/31/1996	96–06–057P	6
6	NM	ALBUQUERQUE, CITY OF	3500020008C	03/25/1996	96–06–127P	6
6	NM	ALBUQUERQUE, CITY OF	3500020011C	01/16/1996	95–06–432A	2
6	NM	ALBUQUERQUE, CITY OF	3500020018C	06/12/1996	96–06–212A	1
6	NM	ALBUQUERQUE, CITY OF	3500020018C	05/23/1996	R6–96–03–296	1
6	NM	ALBUQUERQUE, CITY OF	3500020030C	06/17/1996	96–06–312A	2
6	NM	ALBUQUERQUE, CITY OF	3500020033C	06/28/1996	96–06–213P	5
6	NM	AZTEC, CITY OF	3500650005B	03/05/1996	96–06–155P	6
6	NM	AZTEC, CITY OF	3500650005B	05/02/1996	R6–96–04–211	2
6	NM	CARLSBAD, CITY OF	3500170004C	05/17/1996	R6–96–05–031	2
6	NM	CARLSBAD, CITY OF	3500170004C	06/18/1996	R6–96–06–057	2
6	NM	HOBBS, CITY OF	3500290010B	01/16/1996	R6–96–01–098	2
6	NM	HOBBS, CITY OF	3500290010B	05/01/1996	R6–96–04–315	2
6	NM	HOBBS, CITY OF	3500290015B	01/22/1996	R6–96–01–158	2
6	NM	SAN JUAN COUNTY*	3500640505B	04/26/1996	R6–96–04–212	2
6	NM	SANTA FE, CITY OF	3500700008B	01/24/1996	96–06–071A	2
6	NM	SOCORRO, CITY OF	3500770004B	03/15/1996	R6–96–03–131	2
6	OK	BIXBY, TOWN OF	4002070005B	03/06/1996	R6–96–02–187	2
6	OK	BROKEN ARROW, CITY OF	4002360002C	05/23/1996	R6–96–05–226	2
6	OK	BROKEN ARROW, CITY OF	4002360004D	05/21/1996	R6–96–05–142	2
6	OK	BROKEN ARROW, CITY OF	4002360007D	02/22/1996	R6–96–02–202	2
6	OK	BROKEN ARROW, CITY OF	4002360007D	04/04/1996	R6–96–04–036	2
6	OK	BRYAN COUNTY*	40013C0325C	04/01/1996	R6–96–03–227	2
6	OK	CLEVELAND COUNTY*	4004750100B	06/04/1996	R6–96–05–343	2
6	OK	CLEVELAND COUNTY*	4004750100B	06/04/1996	R6–96–05–344	2
6	OK	CLEVELAND COUNTY*	4004750100B	06/04/1996	R6–96–05–345	2
6	OK	CLEVELAND COUNTY*	4004750100B	06/04/1996	R6–96–05–346	2
6	OK	COWETA, CITY OF	4002160001A	05/24/1996	R6–96–05–153	2
6	OK	DEL CITY, CITY OF	4002330002D	02/21/1996	R6–95–12–109	2
6	OK	EAST NINNEKAH, TOWN OF	4053820005A	03/08/1996	R6–96–02–272	2
6	OK	EAST NINNEKAH, TOWN OF	4053820005A	04/01/1996	R6–96–03–353	2
6	OK	EDMOND, CITY OF	4002520005B	04/23/1996	R6–96–03–337	2

Region	State	Community name	Panel number	Effective date	Case No.	Determination
6	OK	EDMOND, CITY OF	4002520010B	05/09/1996	96–06–237A	2
6	OK	EDMOND, CITY OF	4002520020B	01/24/1996	R6–96–01–246	2
6	OK	EDMOND, CITY OF	4002520020B	02/23/1996	R6–96–02–257	2
6	OK	EL RENO, CITY OF	4053770015C	01/24/1996	R6–96–01–002	2
6	OK	EL RENO, CITY OF	4053770025C	06/05/1996	R6–96–06–017	2
6	OK	ENID, CITY OF	40047C0095C	01/23/1996	95–06–190P	5
6	OK	ENID, CITY OF	40047C0095D	02/09/1996	R6–96–02–078	2
6	OK	JONES CITY, TOWN OF	4001410010A	04/01/1996	R6–96–03–354	2
6	OK	KAY COUNTY*	4004770256A	02/05/1996	R6–96–02–005	2
6	OK	LAWTON, CITY OF	40031C0251C	03/14/1996	R6–96–03–103	2
6	OK	LAWTON, CITY OF	40031C0253D	05/21/1996	R6–96–05–132	1
6	OK	LE FLORE COUNTY*	4004840010A	05/17/1996	R6–96–05–289	2
6	OK	MCCLAIN COUNTY*	4005380105B	05/24/1996	R6–96–05–131	2
6	OK	MIDWEST CITY, CITY OF	4004050010E	04/04/1996	R6–96–03–207	2
6	OK	MOORE, CITY OF	4000440001E	02/13/1996	R6–96–02–134	2
6	OK	MOORE, CITY OF	4000440001E	03/11/1996	R6–96–02–318	2
6	OK	MOORE, CITY OF	4000440001E	03/11/1996	R6–96–02–321	8
6	OK	MOORE, CITY OF	4000440001E	03/22/1996	R6–96–03–197	2
6	OK	MOORE, CITY OF	4000440001E	04/08/1996	R6–96–04–052	2
6	OK	MOORE, CITY OF	4000440001E	05/15/1996	R6–96–05–075	2
6	OK	MOORE, CITY OF	4000440001E	05/15/1996	R6–96–05–082	2
6	OK	MOORE, CITY OF	4000440003D	04/26/1996	R6–96–04–158	2
6	OK	MUSTANG, CITY OF	4004090005A	05/31/1996	R6–96–05–302	2
6	OK	MUSTANG, CITY OF	4004090005A	06/11/1996	R6–96–06–037	2
6	OK	NEWCASTLE, TOWN OF	4001030013E	04/30/1996	R6–96–03–088	17
6	OK	NORMAN, CITY OF	4000460015B	03/27/1996	96–06–103P	5
6	OK	NORMAN, CITY OF	4000460015B	01/16/1996	R6–96–01–017	2
6	OK	NORMAN, CITY OF	4000460055C	03/06/1996	R6–96–03–004	2
6	OK	NORMAN, CITY OF	4000460055C	03/15/1996	R6–96–03–094	2
6	OK	OKLAHOMA CITY, CITY OF	4053780080C	05/24/1996	R6–96–05–144	2
6	OK	OKLAHOMA CITY, CITY OF	4053780110C	03/07/1996	R6–96–03–316	2
6	OK	OKLAHOMA CITY, CITY OF	4053780155E	03/28/1996	R6–96–03–329	2
6	OK	OKLAHOMA CITY, CITY OF	4053780160D	06/11/1996	R6–96–06–032	2
6	OK	OKLAHOMA CITY, CITY OF	4053780160D	06/13/1996	R6–96–06–100	2
6	OK	OKLAHOMA CITY, CITY OF	4053780165D	02/26/1996	95–06–274P	5
6	OK	OKLAHOMA CITY, CITY OF	4053780170E	04/12/1996	R6–96–04–089	2
6	OK	OKLAHOMA CITY, CITY OF	4053780170E	06/20/1996	R6–96–06–124	2
6	OK	OKLAHOMA CITY, CITY OF	4053780175F	02/09/1996	R6–96–02–059	2
6	OK	OKLAHOMA CITY, CITY OF	4053780175F	03/06/1996	R6–96–03–051	2
6	OK	OKLAHOMA CITY, CITY OF	4053780175F	03/28/1996	R6–96–03–335	2
6	OK	OKLAHOMA CITY, CITY OF	4053780175F	04/01/1996	R6–96–03–355	2
6	OK	OKLAHOMA CITY, CITY OF	4053780175F	06/05/1996	R6–96–05–000	2
6	OK	OKLAHOMA CITY, CITY OF	4053780175F	05/06/1996	R6–96–05–029	2
6	OK	OKLAHOMA CITY, CITY OF	4053780175F	05/17/1996	R6–96–05–086	2
6	OK	OKLAHOMA CITY, CITY OF	4053780175F	05/21/1996	R6–96–05–200	2
6	OK	OKLAHOMA CITY, CITY OF	4053780175F	06/05/1996	R6–96–06–000	2
6	OK	OKLAHOMA CITY, CITY OF	4053780175F	01/10/1996	R6–96–12–155	2
6	OK	OKLAHOMA CITY, CITY OF	4053780190F	04/17/1996	96–06–202A	1
6	OK	OKLAHOMA CITY, CITY OF	4053780190F	01/11/1996	R6–96–01–014	2
6	OK	OKLAHOMA CITY, CITY OF	4053780190F	03/27/1996	R6–96–01–049	2
6	OK	OKLAHOMA CITY, CITY OF	4053780190F	03/21/1996	R6–96–03–201	2
6	OK	OKLAHOMA CITY, CITY OF	4053780190F	04/22/1996	R6–96–04–153	2
6	OK	OKLAHOMA CITY, CITY OF	4053780190F	05/03/1996	R6–96–05–013	2
6	OK	OKLAHOMA CITY, CITY OF	4053780190F	06/19/1996	R6–96–06–125	2
6	OK	OKLAHOMA CITY, CITY OF	4053780195C	02/22/1996	R6–96–02–242	2
6	OK	OKLAHOMA CITY, CITY OF	4053780195C	03/15/1996	R6–96–03–140	2
6	OK	OKLAHOMA CITY, CITY OF	4053780200D	05/29/1996	R6–96–05–257	2
6	OK	OKLAHOMA CITY, CITY OF	4053780205D	04/29/1996	R6–96–04–309	2
6	OK	OKLAHOMA CITY, CITY OF	4053780225E	01/29/1996	R6–96–01–269	2
6	OK	OKLAHOMA CITY, CITY OF	4053780255C	01/22/1996	95–06–210P	5
6	OK	OKLAHOMA CITY, CITY OF	4053780255C	06/26/1996	R6–96–06–206	2
6	OK	OKLAHOMA CITY, CITY OF	4053780255C	06/20/1996	R6–96–06–231	2
6	OK	OKLAHOMA COUNTY*	4004660220B	06/20/1996	R6–96–06–123	2
6	OK	OKLAHOMA COUNTY*	4004660245B	05/15/1996	R6–96–05–000	2
6	OK	OKMULGEE COUNTY*	4004920125B	02/22/1996	R6–96–02–203	8
6	OK	OSAGE COUNTY*	4001460545C	03/26/1996	R6–96–03–273	2
6	OK	OWASSO, CITY OF	4002100002D	02/15/1996	96–06–024A	1
6	OK	PAYNE COUNTY*	4004930160C	06/17/1996	R6–96–05–338	2
6	OK	PIEDMONT, CITY OF	4000270025B	01/16/1996	R6–96–01–055	2
6	OK	POTTAWATOMIE COUNTY*	40125C0040D	06/13/1996	R6–96–06–065	2
6	OK	POTTAWATOMIE COUNTY*	40125C0111D	06/13/1996	R6–96–06–081	2
6	OK	PRYOR CREEK, CITY OF	4001170002B	02/22/1996	R6–96–02–225	2
6	OK	PRYOR CREEK, CITY OF	4001170002B	05/17/1996	R6–96–05–040	8

Region	State	Community name	Panel number	Effective date	Case No.	Determination
6	OK	ROGERS COUNTY*	4053790130C	01/16/1996	R6–96–01–007	2
6	OK	ROGERS COUNTY*	4053790130C	05/21/1996	R6–96–05–160	2
6	OK	SALLISAW, CITY OF	40135C0165E	04/03/1996	96–06–240A	2
6	OK	SALLISAW, CITY OF	40135C0165E	03/27/1996	R6–96–03–284	2
6	OK	SHAWNEE, CITY OF	40125C0101D	01/22/1996	R6–96–01–177	2
6	OK	SHAWNEE, CITY OF	40125C0101D	03/06/1996	R6–96–02–307	2
6	OK	SHAWNEE, CITY OF	40125C0101D	03/06/1996	R6–96–02–316	2
6	OK	SHAWNEE, CITY OF	40125C0101D	03/06/1996	R6–96–02–317	2
6	OK	SHAWNEE, CITY OF	40125C0101D	03/20/1996	R6–96–03–055	2
6	OK	SHAWNEE, CITY OF	40125C0101D	04/25/1996	R6–96–04–193	2
6	OK	SHAWNEE, CITY OF	40125C0101D	04/25/1996	R6–96–04–275	2
6	OK	SHAWNEE, CITY OF	40125C0103D	04/22/1996	R6–96–04–154	2
6	OK	SHAWNEE, CITY OF	40125C0125D	03/06/1996	R6–96–02–306	2
6	OK	STILWATER, CITY OF	4053800004D	06/18/1996	R6–96–06–140	2
6	OK	TULSA, CITY OF	4053810040F	03/15/1996	R6–96–03–119	8
6	OK	TULSA, CITY OF	4053810040F	03/28/1996	R6–96–03–322	2
6	OK	TULSA, CITY OF	4053810040F	04/24/1996	R6–96–04–256	8
6	OK	TULSA, CITY OF	4053810045F	02/05/1996	R6–96–01–279	2
6	OK	TULSA, CITY OF	4053810045F	02/14/1996	R6–96–02–151	2
6	OK	TULSA, CITY OF	4053810045F	06/20/1996	R6–96–06–229	2
6	OK	TULSA, CITY OF	4053810060F	05/02/1996	R6–96–04–170	2
6	OK	TULSA, CITY OF	4053810065G	02/22/1996	R6–96–02–197	8
6	OK	TULSA, CITY OF	4053810065G	03/27/1996	R6–96–03–285	2
6	OK	TULSA, CITY OF	4053810065G	04/11/1996	R6–96–04–057	8
6	OK	TULSA, CITY OF	4053810065G	04/16/1996	R6–96–04–108	2
6	OK	TULSA, CITY OF	4053810065G	06/10/1996	R6–96–06–007	8
6	OK	TULSA, CITY OF	4053810070G	03/15/1996	R6–96–03–132	2
6	OK	TULSA, CITY OF	4053810070G	03/15/1996	R6–96–03–132	8
6	OK	TULSA, CITY OF	4053810070G	03/26/1996	R6–96–03–250	8
6	OK	TULSA, CITY OF	4053810070G	04/29/1996	R6–96–04–310	2
6	OK	TULSA, CITY OF	4053810070G	06/20/1996	R6–96–06–196	2
6	OK	TULSA, CITY OF	4053810090F	03/20/1996	R6–96–03–165	2
6	OK	TULSA, CITY OF	4053810095E	04/11/1996	R6–96–04–058	2
6	OK	VINITA, CITY OF	4000500003C	01/22/1996	R6–96–01–178	2
6	OK	WAGONER COUNTY*	4002150027B	03/08/1996	R6–96–03–027	2
6	OK	WAGONER COUNTY*	4002150027B	04/03/1996	R6–96–04–004	2
6	OK	WAGONER COUNTY*	4002150027B	05/01/1996	R6–96–04–314	2
6	OK	WAGONER COUNTY*	4002150031B	06/19/1996	R6–96–06–199	2
6	OK	WAGONER COUNTY*	4002150037B	02/23/1996	R6–96–02–199	2
6	OK	WAGONER COUNTY*	4002150125B	03/29/1996	R6–96–03–298	2
6	OK	WARR ACRES, CITY OF	4004490001A	02/21/1996	R6–96–02–224	2
6	OK	WARR ACRES, CITY OF	4004490001A	03/07/1996	R6–96–02–302	2
6	OK	YUKON, CITY OF	4000280010B	02/05/1996	R6–96–02–011	1
6	OK	YUKON, CITY OF	4000280010B	06/10/1996	R6–96–06–024	2
6	TX	ABILENE, CITY OF	4854500020D	01/22/1996	R6–96–01–111	2
6	TX	ABILENE, CITY OF	4854500025C	05/02/1996	R6–96–04–323	8
6	TX	ABILENE, CITY OF	4854500035D	02/13/1996	R6–96–02–097	2
6	TX	ALLEN, CITY OF	48085C0435G	04/18/1996	R6–96–04–129	2
6	TX	ALLEN, CITY OF	48085C0435G	06/24/1996	R6–96–06–159	2
6	TX	ARLINGTON, CITY OF	48439C0319H	01/25/1996	R6–96–01–000	2
6	TX	ARLINGTON, CITY OF	48439C0336H	01/25/1996	R6–96–01–000	2
6	TX	ARLINGTON, CITY OF	48439C0336H	01/11/1996	R6–96–01–005	2
6	TX	ARLINGTON, CITY OF	48439C0339H	01/25/1996	R6–96–01–000	2
6	TX	ARLINGTON, CITY OF	48439C0339H	01/25/1996	R6–96–01–000	2
6	TX	ARLINGTON, CITY OF	48439C0339H	01/25/1996	R6–96–01–000	2
6	TX	ARLINGTON, CITY OF	48439C0431H	01/25/1996	R6–96–01–000	1
6	TX	ARLINGTON, CITY OF	48439C0431H	01/25/1996	R6–96–01–000	2
6	TX	ARLINGTON, CITY OF	48439C0431H	01/25/1996	R6–96–01–000	2
6	TX	ARLINGTON, CITY OF	48439C0431H	01/25/1996	R6–96–01–000	2
6	TX	ARLINGTON, CITY OF	48439C0431H	01/25/1996	R6–96–01–000	2
6	TX	ARLINGTON, CITY OF	48439C0433H	01/25/1996	R6–96–01–000	2
6	TX	ARLINGTON, CITY OF	48439C0433H	01/22/1996	R6–96–01–195	2
6	TX	ARLINGTON, CITY OF	48439C0437H	01/25/1996	R6–96–01–000	2
6	TX	ARLINGTON, CITY OF	48439C0437H	03/06/1996	R6–96–01–126	2
6	TX	ARLINGTON, CITY OF	48439C0440H	01/25/1996	R6–96–01–000	2
6	TX	ARLINGTON, CITY OF	48439C0440H	01/25/1996	R6–96–01–000	2
6	TX	ARLINGTON, CITY OF	48439C0441H	03/05/1996	96–06–187A	1
6	TX	ARLINGTON, CITY OF	48439C0441H	01/25/1996	R6–96–01–000	1
6	TX	ARLINGTON, CITY OF	48439C0441H	01/25/1996	R6–96–01–000	1
6	TX	ARLINGTON, CITY OF	48439C0441H	01/25/1996	R6–96–01–000	2
6	TX	ARLINGTON, CITY OF	48439C0441H	01/25/1996	R6–96–01–000	2
6	TX	ARLINGTON, CITY OF	48439C0441H	02/21/1996	R6–96–01–112	2
6	TX	ARLINGTON, CITY OF	48439C0442H	01/25/1996	R6–96–01–000	2

Region	State	Community name	Panel number	Effective date	Case No.	Determination
6	TX	ARLINGTON, CITY OF	48439C0442H	02/21/1996	R6–96–02–075	2
6	TX	ARLINGTON, CITY OF	48439C0442H	03/14/1996	R6–96–03–106	2
6	TX	ARLINGTON, CITY OF	48439C0443H	01/25/1996	R6–96–01–000	2
6	TX	ARLINGTON, CITY OF	48439C0444H	03/05/1996	96–06–186A	1
6	TX	ARLINGTON, CITY OF	48439C0444H	01/25/1996	R6–96–01–000	2
6	TX	ARLINGTON, CITY OF	48439C0444H	01/25/1996	R6–96–01–000	2
6	TX	ARLINGTON, CITY OF	48439C0444H	01/25/1996	R6–96–01–000	2
6	TX	ARLINGTON, CITY OF	48439C0444H	04/17/1996	R6–96–04–137	2
6	TX	ARLINGTON, CITY OF	48439C0452H	01/25/1996	R6–96–01–000	2
6	TX	ARLINGTON, CITY OF	48439C0453H	01/11/1996	R6–96–01–035	2
6	TX	ARLINGTON, CITY OF	48439C0462H	01/25/1996	R6–96–01–000	1
6	TX	ARLINGTON, CITY OF	48439C0462H	01/25/1996	R6–96–01–000	1
6	TX	ARLINGTON, CITY OF	48439C0462H	01/25/1996	R6–96–01–000	2
6	TX	ARLINGTON, CITY OF	48439C0462H	01/25/1996	R6–96–01–000	2
6	TX	AUBREY, CITY OF	480776	02/14/1996	R6–96–02–173	2
6	TX	AUSTIN, CITY OF	48453C0000	01/19/1996	95–06–350P	5
6	TX	AUSTIN, CITY OF	48453C0125E	04/08/1996	R6–96–03–085	2
6	TX	AUSTIN, CITY OF	48453C0155E	06/06/1996	96–06–182P	5
6	TX	AUSTIN, CITY OF	48453C0155E	01/12/1996	R6–96–01–099	2
6	TX	AUSTIN, CITY OF	48453C0155E	05/24/1996	R6–96–05–135	2
6	TX	AUSTIN, CITY OF	48453C0165E	02/14/1996	R6–96–02–182	2
6	TX	AUSTIN, CITY OF	48453C0165E	05/22/1996	R6–96–05–137	2
6	TX	AUSTIN, CITY OF	48453C0170E	01/19/1996	95–06–237P	5
6	TX	AUSTIN, CITY OF	48453C0170E	04/05/1996	R6–96–04–037	2
6	TX	AUSTIN, CITY OF	48453C0175E	03/13/1996	R6–96–03–060	2
6	TX	AUSTIN, CITY OF	48453C0200E	05/29/1996	R6–96–05–296	2
6	TX	AUSTIN, CITY OF	48453C0205E	04/24/1996	R6–96–04–000	2
6	TX	AUSTIN, CITY OF	48453C0205E	05/23/1996	R6–96–05–220	2
6	TX	AUSTIN, CITY OF	48453C0255E	01/16/1996	R6–96–01–021	2
6	TX	AUSTIN, CITY OF	48453C0260E	04/29/1996	R6–96–04–017	2
6	TX	AZLE, CITY OF	48439C0119H	02/26/1996	R6–96–02–258	2
6	TX	BEAUMONT, CITY OF	4854570040C	01/19/1996	95–06–407P	6
6	TX	BEDFORD, CITY OF	48439C0307H	03/05/1996	96–06–085P	5
6	TX	BEDFORD, CITY OF	48439C0307H	05/07/1996	96–06–255P	5
6	TX	BEDFORD, CITY OF	48439C0308H	05/03/1996	R6–96–05–017	2
6	TX	BEDFORD, CITY OF	48439C0309H	03/05/1996	96–06–085P	5
6	TX	BEDFORD, CITY OF	48439C0309H	03/13/1996	96–06–140P	6
6	TX	BEDFORD, CITY OF	48439C0309H	03/15/1996	96–06–150P	6
6	TX	BEDFORD, CITY OF	48439C0309H	05/07/1996	96–06–255P	5
6	TX	BEDFORD, CITY OF	48439C0330H	02/19/1996	96–06–070P	6
6	TX	BEDFORD, CITY OF	48439C0330H	03/05/1996	96–06–085P	5
6	TX	BELL COUNTY*	4807060280B	04/05/1996	96–06–066P	6
6	TX	BEXAR COUNTY*	48029C0120E	03/04/1996	96–06–154P	6
6	TX	BEXAR COUNTY*	48029C0233E	05/29/1996	96–06–157P	5
6	TX	BEXAR COUNTY*	48029C0240E	05/14/1996	R6–96–05–000	2
6	TX	BEXAR COUNTY*	48029C0241E	05/29/1996	96–06–157P	5
6	TX	BEXAR COUNTY*	48029C0251E	06/10/1996	96–06–307P	6
6	TX	BEXAR COUNTY*	48029C0257E	03/04/1996	96–06–154P	6
6	TX	BEXAR COUNTY*	48029C0283E	04/29/1996	R6–96–04–124	2
6	TX	BEXAR COUNTY*	48029C0477E	05/30/1996	96–06–293P	5
6	TX	BEXAR COUNTY*	48029C0477E	05/31/1996	R6–96–05–105	2
6	TX	BLANCO COUNTY	48031C0110C	05/31/1996	R6–96–05–336	8
6	TX	BOERNE, CITY OF	4804180002D	04/11/1996	R6–96–04–049	8
6	TX	BOERNE, CITY OF	4804180002D	04/11/1996	R6–96–04–055	2
6	TX	BOERNE, CITY OF	4804180002D	06/20/1996	R6–96–06–175	2
6	TX	BORGER, CITY OF	4803740005C	05/31/1996	96–06–131A	2
6	TX	BOSQUE COUNTY*	480051 B	03/22/1996	R6–96–03–166	2
6	TX	BROWNSVILLE, CITY OF	4801030020B	06/26/1996	R6–96–06–243	2
6	TX	BRYAN, CITY OF	48041C0142C	04/23/1996	R6–96–03–123	2
6	TX	BRYAN, CITY OF	48041C0143C	06/25/1996	R6–96–06–245	2
6	TX	BURLESON, CITY OF	48251C0033G	06/18/1996	R6–96–06–184	2
6	TX	BURLESON, CITY OF	48251C0037G	03/07/1996	R6–96–03–000	8
6	TX	BURLESON, CITY OF	48251C0037G	05/22/1996	R6–96–05–158	2
6	TX	BURNET COUNTY*	48053C0220C	05/30/1996	R6–96–05–287	2
6	TX	BURNET COUNTY*	48053C0312C	04/01/1996	R6–96–03–108	2
6	TX	CALDWELL, CITY OF	4800890001B	01/11/1996	R6–96–01–038	2
6	TX	CAMERON COUNTY*	4801010300D	05/31/1996	96–06–323P	5
6	TX	CARROLLTON, CITY OF	4801670005F	01/11/1996	R6–96–01–026	1
6	TX	CARROLLTON, CITY OF	4801670005F	01/29/1996	R6–96–01–267	2
6	TX	CARROLLTON, CITY OF	4801670005F	03/06/1996	R6–96–02–310	1
6	TX	CARROLLTON, CITY OF	4801670005F	04/16/1996	R6–96–03–161	2
6	TX	CARROLLTON, CITY OF	4801670005G	06/28/1996	96–06–250P	5
6	TX	CARROLLTON, CITY OF	4801670005G	06/13/1996	R6–96–05–128	2

Region	State	Community name	Panel number	Effective date	Case No.	Determination
6	TX	CARROLLTON, CITY OF	4801670005G	06/20/1996	R6–96–06–234	2
6	TX	CARROLLTON, CITY OF	4801670015E	04/17/1996	R6–96–04–133	2
6	TX	CEDAR HILL, CITY OF	4801680015B	03/13/1996	R6–96–03–086	2
6	TX	CEDAR HILL, CITY OF	4801680015B	03/21/1996	R6–96–03–151	2
6	TX	CEDAR HILL, CITY OF	4801680015B	06/10/1996	R6–96–06–010	2
6	TX	CHILDRESS,CITY OF	480125 B	02/22/1996	96–06–177P	6
6	TX	CLEBURNE, CITY OF	48251C0113G	05/31/1996	96–06–315A	1
6	TX	CLEBURNE, CITY OF	48251C0113G	03/13/1996	R6–96–03–030	2
6	TX	CLEBURNE, CITY OF	48251C0113G	05/17/1996	R6–96–05–000	2
6	TX	CLEBURNE, CITY OF	48251C0113G	06/18/1996	R6–96–06–141	2
6	TX	COLLEYVILLE, TOWN OF	48439C0195H	05/13/1996	95–06–203P	5
6	TX	COLLEYVILLE, TOWN OF	48439C0215H	02/06/1996	R6–96–02–027	1
6	TX	COLLEYVILLE, TOWN OF	48439C0215H	05/15/1996	R6–96–05–067	2
6	TX	COLLIN COUNTY*	48085C0125G	03/14/1996	R6–96–03–110	2
6	TX	COLLIN COUNTY*	48085C0280G	01/22/1996	96–06–096P	6
6	TX	COLLIN COUNTY*	48085C0280G	02/14/1996	R6–96–02–136	2
6	TX	COLLIN COUNTY*	48085C0445G	05/06/1996	96–06–174P	5
6	TX	COLLIN COUNTY*	48085C0445G	04/15/1996	R6–96–04–093	2
6	TX	COLLIN COUNTY*	48085C0445G	06/10/1996	R6–96–06–000	2
6	TX	COLUMBUS, CITY OF	48089C0145C	04/12/1996	R6–96–04–067	2
6	TX	CONROE, CITY OF	4804840003D	03/19/1996	R6–96–03–000	2
6	TX	COPPELL, CITY OF	4801700010E	04/23/1996	96–06–178A	1
6	TX	COPPELL, CITY OF	4801700010E	01/16/1996	R6–96–01–018	2
6	TX	COPPELL, CITY OF	4801700010E	05/03/1996	R6–96–04–343	2
6	TX	CORINTH, TOWN OF	4811430004B	04/29/1996	R6–96–04–053	2
6	TX	CORPUS CHRISTI, CITY OF	4854640303C	03/07/1996	R6–96–03–028	2
6	TX	CORPUS CHRISTI, CITY OF	4854640316C	04/18/1996	R6–96–04–122	2
6	TX	CORSICANA, CITY OF	4804980005A	01/11/1996	R6–96–01–029	2
6	TX	CORSICANA, CITY OF	4804980005A	04/18/1996	R6–96–04–092	2
6	TX	CORSICANA, CITY OF	4804980005A	06/17/1996	R6–96–06–134	2
6	TX	DALLAS COUNTY*	4801650335B	04/18/1996	R6–96–04–000	2
6	TX	DALLAS COUNTY*	4801650335B	04/18/1996	R6–96–04–134	2
6	TX	DALLAS, CITY OF	4801710005C	02/06/1996	96–06–132A	2
6	TX	DALLAS, CITY OF	4801710005C	02/09/1996	R6–96–02–056	2
6	TX	DALLAS, CITY OF	4801710010D	06/20/1996	R6–96–05–084	2
6	TX	DALLAS, CITY OF	4801710025C	02/06/1996	96–06–132A	2
6	TX	DALLAS, CITY OF	4801710025C	01/22/1996	R6–96–01–157	2
6	TX	DALLAS, CITY OF	4801710030D	01/11/1996	R6–96–01–041	2
6	TX	DALLAS, CITY OF	4801710060D	02/22/1996	R6–96–02–241	2
6	TX	DALLAS, CITY OF	4801710085D	04/17/1996	R6–96–04–136	1
6	TX	DALLAS, CITY OF	4801710090D	04/11/1996	R6–96–04–056	1
6	TX	DALLAS, CITY OF	4801710100D	04/17/1996	R6–96–04–150	2
6	TX	DALLAS, CITY OF	4801710100D	05/22/1996	R6–96–05–221	1
6	TX	DALLAS, CITY OF	4801710140D	05/30/1996	R6–96–05–276	1
6	TX	DALLAS, CITY OF	4801710140D	05/30/1996	R6–96–05–288	1
6	TX	DALLAS, CITY OF	4801710140D	05/30/1996	R6–96–05–289	1
6	TX	DALLAS, CITY OF	4801710140D	05/30/1996	R6–96–05–290	1
6	TX	DALLAS, CITY OF	4801710140D	05/30/1996	R6–96–05–291	1
6	TX	DALLAS, CITY OF	4801710140D	05/30/1996	R6–96–05–292	1
6	TX	DALLAS, CITY OF	4801710140D	05/30/1996	R6–96–05–293	1
6	TX	DALLAS, CITY OF	4801710175D	03/07/1996	R6–96–02–330	2
6	TX	DALLAS, CITY OF	4801710180D	05/15/1996	R6–96–05–083	2
6	TX	DALLAS, CITY OF	4801710185D	03/19/1996	R6–96–03–020	2
6	TX	DANBURY, CITY OF	48039C0455H	03/21/1996	R6–96–03–154	2
6	TX	DENTON COUNTY*	4807740085B	02/14/1996	R6–96–02–138	2
6	TX	DENTON COUNTY*	4807740130D	02/07/1996	R6–96–03–026	2
6	TX	DENTON COUNTY*	4807740180B	04/29/1996	R6–96–04–313	2
6	TX	DENTON COUNTY*	4807740225C	02/02/1996	96–06–110P	5
6	TX	DENTON, CITY OF	4801940000	03/07/1996	R6–96–01–273	2
6	TX	DENTON, CITY OF	4801940005D	02/01/1996	R6–96–01–305	2
6	TX	DENTON, CITY OF	4801940005D	04/01/1996	R6–96–03–339	2
6	TX	DENTON, CITY OF	4801940010D	03/26/1996	R6–96–03–228	2
6	TX	DESOTO, CITY OF	4801720015C	04/08/1996	96–06–153P	5
6	TX	DESOTO, CITY OF	4801720020C	01/22/1996	R6–96–01–194	2
6	TX	DUNCANVILLE, CITY OF	4801730005D	04/25/1996	R6–96–04–253	2
6	TX	DUNCANVILLE, CITY OF	4801730005D	06/11/1996	R6–96–06–052	2
6	TX	EASTLAND COUNTY*	4807930007A	04/01/1996	R6–96–03–331	2
6	TX	EL PASO, CITY OF	4802140014D	06/14/1996	R6–96–06–026	2
6	TX	EL PASO, CITY OF	4802140021C	03/20/1996	R6–96–03–153	2
6	TX	EL PASO, CITY OF	4802140021C	06/14/1996	R6–96–06–041	1
6	TX	EL PASO, CITY OF	4802140022D	02/16/1996	96–06–038P	5
6	TX	EL PASO, CITY OF	4802140036B	01/11/1996	R6–96–01–050	2
6	TX	EL PASO, CITY OF	4802140042B	03/27/1996	R6–96–03–293	2

Region	State	Community name	Panel number	Effective date	Case No.	Determination
6	TX	EL PASO, CITY OF	4802140042B	04/30/1996	R6–96–04–290	2
6	TX	EL PASO, CITY OF	4802140044B	04/19/1996	R6–96–04–155	8
6	TX	EL PASO, CITY OF	4802140044B	06/14/1996	R6–96–05–159	2
6	TX	ELLIS COUNTY*	4807980025B	05/03/1996	R6–96–04–109	2
6	TX	ENCHANTED OAKS, TOWN OF	48213C0045C	05/30/1996	R6–96–05–311	2
6	TX	EULESS, CITY OF	48439C0330H	02/21/1996	R6–96–02–189	2
6	TX	EULESS, CITY OF	48439C0330H	05/30/1996	R6–96–05–198	2
6	TX	FANNIN COUNTY*	4808070005A	05/13/1996	R6–96–05–085	2
6	TX	FARMERS BRANCH, CITY OF	4801740005C	03/14/1996	R6–96–03–113	2
6	TX	FLOWER MOUND, TOWN OF	4807770005A	02/14/1996	R6–96–02–148	2
6	TX	FLOWER MOUND, TOWN OF	4807770005A	02/22/1996	R6–96–02–249	1
6	TX	FLOWER MOUND, TOWN OF	4807770005A	04/25/1996	R6–96–04–264	2
6	TX	FLOWER MOUND, TOWN OF	4807770005A	05/15/1996	R6–96–05–076	2
6	TX	FLOWER MOUND, TOWN OF	4807770005A	06/04/1996	R6–96–05–341	2
6	TX	FLOWER MOUND, TOWN OF	4807770015B	02/15/1996	R6–96–02–195	2
6	TX	FORT BEND COUNTY*	48157C0100H	01/11/1996	R6–96–01–048	2
6	TX	FORT WORTH, CITY OF	48439C0000	04/22/1996	96–06–005P	5
6	TX	FORT WORTH, CITY OF	48439C0155H	06/26/1996	96–06–254P	5
6	TX	FORT WORTH, CITY OF	48439C0170H	02/21/1996	R6–96–02–149	2
6	TX	FORT WORTH, CITY OF	48439C0170H	03/25/1996	R6–96–03–261	2
6	TX	FORT WORTH, CITY OF	48439C0245H	06/20/1996	R6–96–06–143	2
6	TX	FORT WORTH, CITY OF	48439C0280H	06/18/1996	96–06–113P	5
6	TX	FORT WORTH, CITY OF	48439C0280H	05/23/1996	R6–96–05–066	2
6	TX	FORT WORTH, CITY OF	48439C0285H	03/14/1996	96–06–079P	6
6	TX	FORT WORTH, CITY OF	48439C0285H	06/18/1996	96–06–113P	5
6	TX	FORT WORTH, CITY OF	48439C0285H	03/21/1996	R6–96–03–187	2
6	TX	FORT WORTH, CITY OF	48439C0311H	06/24/1996	96–06–364A	1
6	TX	FORT WORTH, CITY OF	48439C0313H	06/05/1996	R6–96–05–348	2
6	TX	FORT WORTH, CITY OF	48439C0313H	06/05/1996	R6–96–05–348	2
6	TX	FORT WORTH, CITY OF	48439C0385H	01/22/1996	R6–96–01–214	2
6	TX	FORT WORTH, CITY OF	48439C0395H	02/21/1996	R6–96–02–191	2
6	TX	FORT WORTH, CITY OF	48439C0395H	03/11/1996	R6–96–03–039	2
6	TX	FORT WORTH, CITY OF	48439C0395H	04/03/1996	R6–96–04–005	2
6	TX	FORT WORTH, CITY OF	48439C0395H	05/30/1996	R6–96–05–079	2
6	TX	FORT WORTH, CITY OF	48439C0405H	02/09/1996	R6–96–02–067	2
6	TX	FORT WORTH, CITY OF	48439C0405H	03/15/1996	R6–96–03–135	1
6	TX	FORT WORTH, CITY OF	48439C0510H	05/31/1996	R6–96–05–306	2
6	TX	FRISCO, CITY OF	48085C0270G	03/27/1996	96–06–171P	5
6	TX	FRISCO, CITY OF	48085C0270G	06/20/1996	R6–96–06–183	2
6	TX	GALVESTON COUNTY*	4854700095C	05/02/1996	96–06–205P	6
6	TX	GARLAND, CITY OF	4854710010D	04/15/1996	R6–96–04–098	2
6	TX	GARLAND, CITY OF	4854710015D	01/18/1996	R6–96–01–121	2
6	TX	GARLAND, CITY OF	4854710015D	01/18/1996	R6–96–01–122	2
6	TX	GARLAND, CITY OF	4854710015D	02/13/1996	R6–96–02–092	2
6	TX	GARLAND, CITY OF	4854710015D	05/02/1996	R6–96–05–004	1
6	TX	GARLAND, CITY OF	4854710015D	06/17/1996	R6–96–06–173	2
6	TX	GARLAND, CITY OF	4854710020D	02/09/1996	R6–96–02–068	2
6	TX	GARLAND, CITY OF	4854710020D	02/14/1996	R6–96–02–137	2
6	TX	GARLAND, CITY OF	4854710020D	04/15/1996	R6–96–04–094	1
6	TX	GARLAND, CITY OF	4854710020D	04/15/1996	R6–96–04–095	1
6	TX	GARLAND, CITY OF	4854710020D	04/15/1996	R6–96–04–096	1
6	TX	GARLAND, CITY OF	4854710020D	04/15/1996	R6–96–04–097	1
6	TX	GILLESPIE COUNTY*	4806960007B	01/11/1996	R6–96–01–032	2
6	TX	GILLESPIE COUNTY*	4806960007B	01/16/1996	R6–96–01–052	2
6	TX	GILMER, CITY OF	480625 B	03/13/1996	R6–96–03–058	2
6	TX	GRANBURY, CITY OF	4803570005B	03/06/1996	R6–96–02–298	2
6	TX	GRAND PRAIRIE, CITY OF	4854720010E	03/14/1996	R6–96–03–083	2
6	TX	GRAND PRAIRIE, CITY OF	4854720030E	04/16/1996	R6–96–04–130	2
6	TX	GRAPEVINE, CITY OF	48439C0205H	02/21/1996	R6–96–02–183	2
6	TX	GUN BARREL, CITY OF	48213C0030C	02/21/1996	R6–96–02–223	2
6	TX	GUN BARREL, CITY OF	48213C0030C	05/30/1996	R6–96–05–254	2
6	TX	GUN BARREL, CITY OF	48213C0030C	05/30/1996	R6–96–05–255	2
6	TX	HALTOM CITY, CITY OF	48439C0285H	02/15/1996	96–06–076A	1
6	TX	HARDIN COUNTY*	48199C0075C	03/21/1996	R6–96–03–117	2
6	TX	HARRIS COUNTY*	48201C0050H	03/13/1996	96–06–064A	2
6	TX	HARRIS COUNTY*	48201C0065G	01/31/1996	96–06–065P	6
6	TX	HARRIS COUNTY*	48201C0065G	05/22/1996	96–06–207P	5
6	TX	HARRIS COUNTY*	48201C0065G	05/22/1996	96–06–232A	1
6	TX	HARRIS COUNTY*	48201C0065G	04/12/1996	96–06–245A	1
6	TX	HARRIS COUNTY*	48201C0065G	04/12/1996	96–06–258A	1
6	TX	HARRIS COUNTY*	48201C0085H	06/12/1996	95–06–451P	5
6	TX	HARRIS COUNTY*	48201C0085H	04/25/1996	96–06–144A	1
6	TX	HARRIS COUNTY*	48201C0085H	03/19/1996	96–06–197A	1

Region	State	Community name	Panel number	Effective date	Case No.	Determination
6	TX	HARRIS COUNTY*	48201C0085H	05/22/1996	96–06–327A	1
6	TX	HARRIS COUNTY*	48201C0090G	04/03/1996	96–06–080A	1
6	TX	HARRIS COUNTY*	48201C0090G	04/12/1996	96–06–244A	1
6	TX	HARRIS COUNTY*	48201C0090G	06/12/1996	96–06–326A	1
6	TX	HARRIS COUNTY*	48201C0110G	01/31/1996	96–06–065P	6
6	TX	HARRIS COUNTY*	48201C0110G	01/17/1996	96–06–086A	2
6	TX	HARRIS COUNTY*	48201C0110G	05/22/1996	96–06–207P	5
6	TX	HARRIS COUNTY*	48201C0110G	05/01/1996	96–06–260A	1
6	TX	HARRIS COUNTY*	48201C0110G	01/29/1996	R6–96–01–271	2
6	TX	HARRIS COUNTY*	48201C0110G	04/08/1996	R6–96–04–061	2
6	TX	HARRIS COUNTY*	48201C0180G	04/23/1996	96–06–229A	1
6	TX	HARRIS COUNTY*	48201C0180G	03/07/1996	R6–96–03–000	2
6	TX	HARRIS COUNTY*	48201C0250G	05/07/1996	96–06–241A	1
6	TX	HARRIS COUNTY*	48201C0250G	04/09/1996	96–06–242A	2
6	TX	HARRIS COUNTY*	48201C0270H	05/09/1996	96–06–221A	2
6	TX	HARRIS COUNTY*	48201C0270H	05/31/1996	96–06–303A	1
6	TX	HARRIS COUNTY*	48201C0310H	04/19/1996	96–06–222A	2
6	TX	HARRIS COUNTY*	48201C0360G	06/19/1996	96–06–231A	1
6	TX	HASLET, CITY OF	48439C0155H	06/26/1996	96–06–254P	5
6	TX	HASLET, CITY OF	48439C0155H	06/26/1996	96–06–254P	5
6	TX	HENDERSON COUNTY*	48213C0030C	01/29/1996	R6–96–01–270	2
6	TX	HENDERSON COUNTY*	48213C0030C	05/22/1996	R6–96–05–148	2
6	TX	HENDERSON COUNTY*	48213C0030C	05/31/1996	R6–96–05–312	2
6	TX	HENDERSON COUNTY*	48213C0040C	04/29/1996	R6–96–04–307	2
6	TX	HENDERSON COUNTY*	48213C0045C	02/21/1996	R6–96–02–180	2
6	TX	HENDERSON COUNTY*	48213C0045C	02/26/1996	R6–96–02–254	2
6	TX	HENDERSON COUNTY*	48213C0045C	03/13/1996	R6–96–03–084	2
6	TX	HENDERSON COUNTY*	48213C0045C	03/14/1996	R6–96–03–112	2
6	TX	HENDERSON COUNTY*	48213C0045C	04/17/1996	R6–96–04–116	2
6	TX	HENDERSON COUNTY*	48213C0045C	04/29/1996	R6–96–04–292	2
6	TX	HENDERSON COUNTY*	48213C0045C	05/30/1996	R6–96–05–252	2
6	TX	HENDERSON COUNTY*	48213C0075C	03/28/1996	R6–96–03–332	2
6	TX	HENDERSON COUNTY*	48213C0125C	05/22/1996	R6–96–05–098	2
6	TX	HENDERSON COUNTY*	48213C0150C	04/17/1996	R6–96–04–127	2
6	TX	HENDERSON COUNTY*	48213C0225C	03/22/1996	R6–96–03–198	2
6	TX	HENDERSON COUNTY*	48213C0225C	05/02/1996	R6–96–05–006	2
6	TX	HIDALGO COUNTY*	4803340300C	03/07/1996	R6–96–02–303	2
6	TX	HIGHLAND PARK, TOWN OF	4801780005B	02/09/1996	R6–96–02–062	2
6	TX	HOOD COUNTY*	4803560045B	02/05/1996	R6–96–02–013	2
6	TX	HOOD COUNTY*	4803560045B	04/26/1996	R6–96–04–299	2
6	TX	HOOD COUNTY*	4803560130C	01/22/1996	R6–96–01–113	2
6	TX	HOOKS,CITY OF	4800569999A	04/01/1996	R6–96–03–347	2
6	TX	HOOKS,CITY OF	4800569999A	04/29/1996	R6–96–04–306	2
6	TX	HOUSTON, CITY OF	48157C0280H	04/24/1996	96–06–294P	5
6	TX	HOUSTON, CITY OF	48201C0000	01/23/1996	96–06–059A	8
6	TX	HOUSTON, CITY OF	48201C0230G	05/09/1996	96–06–172A	2
6	TX	HOUSTON, CITY OF	48201C0235G	04/08/1996	R6–96–04–059	2
6	TX	HOUSTON, CITY OF	48201C0270H	03/19/1996	96–06–006A	1
6	TX	HOUSTON, CITY OF	48201C0270H	03/19/1996	96–06–145A	1
6	TX	HOUSTON, CITY OF	48201C0270H	05/09/1996	96–06–164A	1
6	TX	HOUSTON, CITY OF	48201C0270H	05/22/1996	96–06–310A	2
6	TX	HOUSTON, CITY OF	48201C0275H	03/19/1996	96–06–006A	1
6	TX	HOUSTON, CITY OF	48201C0275H	03/19/1996	96–06–145A	1
6	TX	HOUSTON, CITY OF	48201C0275H	05/09/1996	96–06–164A	1
6	TX	HOUSTON, CITY OF	48201C0275H	05/09/1996	96–06–165A	1
6	TX	HOUSTON, CITY OF	48201C0275H	04/24/1996	96–06–294P	5
6	TX	HOUSTON, CITY OF	48201C0275H	06/28/1996	96–06–328A	2
6	TX	HOUSTON, CITY OF	48201C0275H	06/20/1996	R6–96–05–315	2
6	TX	HOUSTON, CITY OF	48201C0320G	06/19/1996	96–06–354A	1
6	TX	HOUSTON, CITY OF	48201C0330H	06/19/1996	96–06–243A	2
6	TX	HOUSTON, CITY OF	48201C0330H	04/16/1996	96–06–252P	5
6	TX	HOUSTON, CITY OF	48201C0330H	04/08/1996	R6–96–04–062	2
6	TX	HOUSTON, CITY OF	48201C0370G	06/18/1996	R6–96–06–162	2
6	TX	HUNT COUNTY*	48231C0190E	03/20/1996	R6–96–03–156	2
6	TX	INGRAM, CITY OF	4804190000	05/31/1996	96–06–163P	5
6	TX	IRVING, CITY OF	4801800020F	03/06/1996	96–06–078A	1
6	TX	IRVING, CITY OF	4801800020F	06/28/1996	96–06–348A	1
6	TX	IRVING, CITY OF	4801800035C	01/22/1996	R6–96–01–225	2
6	TX	IRVING, CITY OF	4801800045D	03/14/1996	R6–96–01–000	2
6	TX	IRVING, CITY OF	4801800045D	02/01/1996	R6–96–01–300	1
6	TX	IRVING, CITY OF	4801800045D	03/15/1996	R6–96–03–125	1
6	TX	IRVING, CITY OF	4801800045D	03/22/1996	R6–96–03–203	2
6	TX	IRVING, CITY OF	4801800045D	05/02/1996	R6–96–04–342	1

Region	State	Community name	Panel number	Effective date	Case No.	Determination
6	TX	IRVING, CITY OF	4801800045D	05/31/1996	R6–96–05–000	1
6	TX	JEFFERSON COUNTY*	4803850145C	01/19/1996	95–06–407P	6
6	TX	JOHNSON COUNTY*	48251C0112F	02/09/1996	95–06–380P	6
6	TX	KEENE, CITY OF	48251C0112F	02/09/1996	95–06–380P	6
6	TX	KELLER, CITY OF	48439C0180H	06/14/1996	R6–96–06–088	2
6	TX	KERR COUNTY*	4804190175B	05/31/1996	96–06–163P	5
6	TX	KERR COUNTY*	4804190275B	05/31/1996	96–06–163P	5
6	TX	KERR COUNTY*	4804190275B	02/26/1996	R6–96–02–260	2
6	TX	KERRVILLE, CITY OF	4804200005D	05/31/1996	96–06–163P	5
6	TX	KERRVILLE, CITY OF	4804200010D	05/31/1996	96–06–163P	5
6	TX	KILLEEN, CITY OF	4800310003C	03/06/1996	96–96–03–006	2
6	TX	KILLEEN, CITY OF	4800310003C	01/24/1996	R6–96–01–239	2
6	TX	KILLEEN, CITY OF	4800310003C	01/24/1996	R6–96–01–240	2
6	TX	KILLEEN, CITY OF	4800310003C	01/24/1996	R6–96–01–241	2
6	TX	KILLEEN, CITY OF	4800310003C	01/31/1996	R6–96–01–280	2
6	TX	KILLEEN, CITY OF	4800310003C	02/05/1996	R6–96–02–009	2
6	TX	KILLEEN, CITY OF	4800310003C	02/06/1996	R6–96–02–028	2
6	TX	KILLEEN, CITY OF	4800310003C	02/06/1996	R6–96–02–029	2
6	TX	KILLEEN, CITY OF	4800310003C	02/21/1996	R6–96–02–192	2
6	TX	KILLEEN, CITY OF	4800310003C	02/21/1996	R6–96–02–193	2
6	TX	KILLEEN, CITY OF	4800310003C	03/11/1996	R6–96–02–275	2
6	TX	KILLEEN, CITY OF	4800310003C	03/26/1996	R6–96–02–285	2
6	TX	KILLEEN, CITY OF	4800310003C	03/06/1996	R6–96–03–005	2
6	TX	KILLEEN, CITY OF	4800310003C	03/15/1996	R6–96–03–122	2
6	TX	KILLEEN, CITY OF	4800310003C	03/15/1996	R6–96–03–130	2
6	TX	KILLEEN, CITY OF	4800310003C	03/20/1996	R6–96–03–155	2
6	TX	KILLEEN, CITY OF	4800310003C	03/22/1996	R6–96–03–178	2
6	TX	KILLEEN, CITY OF	4800310003C	03/22/1996	R6–96–03–179	2
6	TX	KILLEEN, CITY OF	4800310003C	03/22/1996	R6–96–03–182	2
6	TX	KILLEEN, CITY OF	4800310003C	03/28/1996	R6–96–03–294	2
6	TX	KILLEEN, CITY OF	4800310003C	03/28/1996	R6–96–03–295	2
6	TX	KILLEEN, CITY OF	4800310003C	04/03/1996	R6–96–04–002	2
6	TX	KILLEEN, CITY OF	4800310003C	04/05/1996	R6–96–04–046	2
6	TX	KILLEEN, CITY OF	4800310003C	04/05/1996	R6–96–04–047	2
6	TX	KILLEEN, CITY OF	4800310003C	04/17/1996	R6–96–04–105	2
6	TX	KILLEEN, CITY OF	4800310003C	04/17/1996	R6–96–04–106	2
6	TX	KILLEEN, CITY OF	4800310003C	04/25/1996	R6–96–04–278	2
6	TX	KILLEEN, CITY OF	4800310003C	04/25/1996	R6–96–04–278	2
6	TX	KILLEEN, CITY OF	4800310003C	05/01/1996	R6–96–04–320	2
6	TX	KILLEEN, CITY OF	4800310003C	05/01/1996	R6–96–04–321	2
6	TX	KILLEEN, CITY OF	4800310003C	05/02/1996	R6–96–04–344	2
6	TX	KILLEEN, CITY OF	4800310003C	05/02/1996	R6–96–04–345	2
6	TX	KILLEEN, CITY OF	4800310003C	05/15/1996	R6–96–05–060	2
6	TX	KILLEEN, CITY OF	4800310003C	05/15/1996	R6–96–05–061	2
6	TX	KILLEEN, CITY OF	4800310003C	05/23/1996	R6–96–05–246	2
6	TX	KILLEEN, CITY OF	4800310003C	05/23/1996	R6–96–05–247	2
6	TX	KILLEEN, CITY OF	4800310003C	06/04/1996	R6–96–05–347	2
6	TX	KILLEEN, CITY OF	4800310003C	06/04/1996	R6–96–05–349	2
6	TX	KILLEEN, CITY OF	4800310003C	06/10/1996	R6–96–06–008	2
6	TX	KILLEEN, CITY OF	4800310003C	06/20/1996	R6–96–06–160	2
6	TX	KILLEEN, CITY OF	4800310003C	06/20/1996	R6–96–06–202	2
6	TX	KILLEEN, CITY OF	4800310003C	06/20/1996	R6–96–06–220	2
6	TX	KILLEEN, CITY OF	4800310003C	01/31/1996	R6–96–06–281	2
6	TX	KILLEEN, CITY OF	4800310006B	01/22/1996	R6–96–01–165	2
6	TX	KILLEEN, CITY OF	4800310008B	02/01/1996	R6–96–01–306	2
6	TX	KILLEEN, CITY OF	4800310008B	03/26/1996	R6–96–03–249	2
6	TX	LAGO VISTA, CITY OF	48453C0355E	04/23/1996	R6–96–04–190	8
6	TX	LAKE RANSOM CANYON, VILLAGE OF	4815770001B	01/11/1996	R6–96–01–054	1
6	TX	LAKE RANSOM CANYON, VILLAGE OF	4815770001B	06/11/1996	R6–96–06–051	1
6	TX	LAREDO, CITY OF	4806510005B	04/29/1996	R6–96–04–312	2
6	TX	LEON VALLEY, CITY OF	48029C0263E	06/20/1996	R6–96–06–194	2
6	TX	LEWISVILLE, CITY OF	4801950015C	02/02/1996	96–06–110P	5
6	TX	LEWISVILLE, CITY OF	4801950020D	02/02/1996	96–06–110P	5
6	TX	LEWISVILLE, CITY OF	4801950020D	01/11/1996	R6–96–01–010	1
6	TX	LEWISVILLE, CITY OF	4801950020D	03/11/1996	R6–96–02–250	2
6	TX	LEWISVILLE, CITY OF	4801950020D	04/18/1996	R6–96–04–173	2
6	TX	LEWISVILLE, CITY OF	4801950020D	04/18/1996	R6–96–04–174	2
6	TX	LEWISVILLE, CITY OF	4801950020D	04/18/1996	R6–96–04–175	2
6	TX	LEWISVILLE, CITY OF	4801950020D	04/26/1996	R6–96–04–295	2
6	TX	LEWISVILLE, CITY OF	4801950020D	04/26/1996	R6–96–04–296	2
6	TX	LEWISVILLE, CITY OF	4801950020D	04/26/1996	R6–96–04–297	2
6	TX	LEWISVILLE, CITY OF	4801950020D	06/27/1996	R6–96–06–000	2
6	TX	LEWISVILLE, CITY OF	4801950020D	06/20/1996	R6–96–06–223	2

Region	State	Community name	Panel number	Effective date	Case No.	Determination
6	TX	LEWISVILLE, CITY OF	4801950025C	02/02/1996	96–06–110P	5
6	TX	LLANO COUNTY*	4812340285B	06/05/1996	R6–96–06–091	2
6	TX	LLANO COUNTY*	4812340285B	06/17/1996	R6–96–06–172	2
6	TX	LLANO, CITY OF	4804510005B	02/26/1996	R6–96–02–147	8
6	TX	LONGVIEW, CITY OF	4802640015D	03/14/1996	R6–96–03–101	2
6	TX	LONGVIEW, CITY OF	4802640015D	03/14/1996	R6–96–03–102	2
6	TX	LONGVIEW, CITY OF	4802640015D	06/14/1996	R6–96–06–016	2
6	TX	LUBBOCK, CITY OF	4804520020B	02/13/1996	96–06–021A	1
6	TX	LUBBOCK, CITY OF	4804520025B	02/13/1996	96–06–021A	1
6	TX	LUBBOCK, CITY OF	4804520025B	06/04/1996	R6–96–05–339	2
6	TX	LUBBOCK, CITY OF	4804520040B	01/22/1996	R6–96–01–124	1
6	TX	LUBBOCK, CITY OF	4804520045C	04/01/1996	96–06–114P	5
6	TX	LUBBOCK, CITY OF	4804520045C	01/11/1996	R6–96–01–001	1
6	TX	LUBBOCK, CITY OF	4804520045C	01/12/1996	R6–96–01–082	8
6	TX	LUBBOCK, CITY OF	4804520045C	01/22/1996	R6–96–01–123	1
6	TX	LUBBOCK, CITY OF	4804520045C	01/22/1996	R6–96–01–125	1
6	TX	LUBBOCK, CITY OF	4804520045C	01/31/1996	R6–96–01–275	1
6	TX	LUBBOCK, CITY OF	4804520045C	01/31/1996	R6–96–01–275	1
6	TX	LUBBOCK, CITY OF	4804520045C	03/06/1996	R6–96–03–010	1
6	TX	LUBBOCK, CITY OF	4804520045C	03/21/1996	R6–96–03–162	1
6	TX	LUBBOCK, CITY OF	4804520045C	03/21/1996	R6–96–03–176	1
6	TX	LUBBOCK, CITY OF	4804520045C	03/21/1996	R6–96–03–177	1
6	TX	LUBBOCK, CITY OF	4804520050B	01/11/1996	R6–96–01–012	1
6	TX	LUBBOCK, CITY OF	4804520050B	01/12/1996	R6–96–01–100	1
6	TX	MANSFIELD, CITY OF	48439C0560H	05/31/1996	R6–96–05–305	2
6	TX	MANSFIELD, CITY OF	48439C0580H	05/22/1996	96–06–136A	1
6	TX	MANSFIELD, CITY OF	48439C0580H	01/18/1996	R6–96–01–127	1
6	TX	MANSFIELD, CITY OF	48439C0580H	05/30/1996	R6–96–05–281	8
6	TX	MANSFIELD, CITY OF	48439C0580H	06/10/1996	R6–96–06–094	2
6	TX	MCKINNEY, CITY OF	48085C0280G	01/22/1996	96–06–096P	6
6	TX	MCKINNEY, CITY OF	48085C0290G	01/22/1996	96–06–096P	6
6	TX	MCKINNEY, CITY OF	48085C0295G	02/29/1996	96–06–091A	2
6	TX	MCKINNEY, CITY OF	48085C0295G	02/28/1996	96–06–099P	6
6	TX	MCLENNAN COUNTY	4804560050B	05/30/1996	R6–96–05–282	2
6	TX	MESQUITE, CITY OF	4854900005G	03/15/1996	R6–96–03–120	2
6	TX	MESQUITE, CITY OF	4854900010E	01/31/1996	95–06–282P	5
6	TX	MESQUITE, CITY OF	4854900010E	03/08/1996	R6–96–03–045	1
6	TX	MESQUITE, CITY OF	4854900010E	03/08/1996	R6–96–03–046	1
6	TX	MESQUITE, CITY OF	4854900010E	03/08/1996	R6–96–03–047	1
6	TX	MESQUITE, CITY OF	4854900010E	03/08/1996	R6–96–03–048	1
6	TX	MESQUITE, CITY OF	4854900010E	04/03/1996	R6–96–04–003	2
6	TX	MIDLAND COUNTY*	48329C0108C	01/12/1996	R6–96–01–101	2
6	TX	MIDLAND COUNTY*	48329C0108C	05/23/1996	R6–96–05–229	2
6	TX	MIDLAND COUNTY*	48329C0150C	03/26/1996	96–06–061P	5
6	TX	MIDLAND, CITY OF	48329C0019D	05/21/1996	96–06–261P	5
6	TX	MIDLAND, CITY OF	48329C0019D	01/12/1996	R6–96–01–083	1
6	TX	MIDLAND, CITY OF	48329C0019D	01/22/1996	R6–96–01–179	2
6	TX	MIDLAND, CITY OF	48329C0019D	01/31/1996	R6–96–01–303	1
6	TX	MIDLAND, CITY OF	48329C0019D	03/14/1996	R6–96–03–095	1
6	TX	MIDLAND, CITY OF	48329C0019D	03/21/1996	R6–96–03–169	1
6	TX	MIDLAND, CITY OF	48329C0019D	05/29/1996	R6–96–05–278	2
6	TX	MIDLAND, CITY OF	48329C0038C	05/21/1996	96–06–261P	5
6	TX	MIDLAND, CITY OF	48329C0039C	01/11/1996	R6–96–01–008	2
6	TX	MIDLAND, CITY OF	48329C0082C	05/21/1996	96–06–261P	5
6	TX	MIDLAND, CITY OF	48329C0082C	01/11/1996	R6–96–01–045	1
6	TX	MIDLAND, CITY OF	48329C0082C	01/12/1996	R6–96–01–084	2
6	TX	MIDLAND, CITY OF	48329C0082C	02/21/1996	R6–96–02–208	1
6	TX	MIDLAND, CITY OF	48329C0082C	03/21/1996	R6–96–03–000	1
6	TX	MIDLAND, CITY OF	48329C0082C	03/14/1996	R6–96–03–096	1
6	TX	MIDLAND, CITY OF	48329C0082C	04/12/1996	R6–96–04–081	2
6	TX	MIDLAND, CITY OF	48329C0082C	05/30/1996	R6–96–05–333	2
6	TX	MIDLAND, CITY OF	48329C0082C	06/14/1996	R6–96–06–078	1
6	TX	MIDLAND, CITY OF	48329C0082C	06/26/1996	R6–96–06–244	2
6	TX	MIDLAND, CITY OF	48329C0101D	05/21/1996	96–06–261P	5
6	TX	MIDLAND, CITY OF	48329C0101D	02/14/1996	R6–96–02–141	2
6	TX	MIDLAND, CITY OF	48329C0101D	05/29/1996	R6–96–05–256	2
6	TX	MIDLAND, CITY OF	48329C0101D	05/31/1996	R6–96–05–310	2
6	TX	MISSOURI CITY, CITY OF	48157C0270H	04/19/1996	95–06–408A	1
6	TX	MISSOURI CITY, CITY OF	48157C0270H	06/27/1996	96–06–358P	6
6	TX	MONTGOMERY COUNTY*	4804830085C	01/10/1996	96–06–012A	2
6	TX	MONTGOMERY COUNTY*	4804830085C	05/22/1996	96–06–074A	1
6	TX	MONTGOMERY COUNTY*	4804830085C	05/23/1996	96–06–321P	5
6	TX	MONTGOMERY COUNTY*	4804830085C	01/22/1996	R6–96–01–159	2

Region	State	Community name	Panel number	Effective date	Case No.	Determination
6	TX	MONTGOMERY COUNTY*	4804830085C	01/31/1996	R6–96–01–309	1
6	TX	MONTGOMERY COUNTY*	4804830085C	04/01/1996	R6–96–03–342	2
6	TX	MONTGOMERY COUNTY*	4804830085C	04/12/1996	R6–96–04–088	2
6	TX	MONTGOMERY COUNTY*	4804830125D	01/31/1996	R6–96–01–277	2
6	TX	MONTGOMERY COUNTY*	4804830125D	04/01/1996	R6–96–03–352	2
6	TX	MONTGOMERY COUNTY*	4804830165C	02/20/1996	95–06–436A	2
6	TX	MONTGOMERY COUNTY*	4804830165C	03/27/1996	96–06–106P	5
6	TX	MONTGOMERY COUNTY*	4804830165C	06/12/1996	96–06–319A	2
6	TX	MONTGOMERY COUNTY*	4804830165C	03/28/1996	R6–96–03–330	2
6	TX	MONTGOMERY COUNTY*	4804830170D	04/16/1996	R6–96–04–104	2
6	TX	MONTGOMERY COUNTY*	4804830195C	05/06/1996	R6–96–05–033	2
6	TX	MONTGOMERY COUNTY*	4804830205E	01/16/1996	95–06–437A	1
6	TX	MONTGOMERY COUNTY*	4804830205E	01/18/1996	96–06–007A	1
6	TX	MONTGOMERY COUNTY*	4804830205E	03/27/1996	96–06–106P	5
6	TX	MONTGOMERY COUNTY*	4804830205E	03/27/1996	R6–96–03–163	2
6	TX	MONTGOMERY COUNTY*	4804830205E	06/20/1996	R6–96–06–132	2
6	TX	MORGAN'S POINT RESORT, TOWN OF	4815250001A	01/09/1996	R6–95–12–139	2
6	TX	NACOGDOCHES COUNTY*	4809470004B	01/11/1996	R6–96–01–033	2
6	TX	NEDERLAND, CITY OF	4854920005D	04/17/1996	R6–96–04–110	2
6	TX	NEDERLAND, CITY OF	4854920005D	06/20/1996	R6–96–06–228	2
6	TX	NEW BRAUNFELS, CITY OF	4854930006C	03/26/1996	R6–96–03–200	2
6	TX	NORTH RICHLAND HILLS, CITY OF	48439C0189H	05/30/1996	96–06–280A	1
6	TX	NORTH RICHLAND HILLS, CITY OF	48439C0189H	03/28/1996	R6–96–03–333	2
6	TX	NORTH RICHLAND HILLS, CITY OF	48439C0301H	05/02/1996	R6–96–05–008	2
6	TX	ODESSA, CITY OF	48135C0135C	01/31/1996	R6–96–01–304	2
6	TX	PARKER COUNTY*	4805200275B	05/06/1996	R6–96–05–033	17
6	TX	PASADENA, CITY OF	48201C0335H	05/15/1996	95–06–411P	5
6	TX	PAYNE SPRINGS, CITY OF	48213C0045C	02/22/1996	R6–96–02–255	2
6	TX	PLANO, CITY OF	48085C0390E	01/11/1996	R6–96–01–015	2
6	TX	PLANO, CITY OF	48085C0410G	02/26/1996	96–06–073P	6
6	TX	PLANO, CITY OF	48085C0410G	01/29/1996	96–06–081P	5
6	TX	PLANO, CITY OF	48085C0415G	04/17/1996	96–06–275P	5
6	TX	PLANO, CITY OF	48085C0420G	03/27/1996	96–06–143P	5
6	TX	PLANO, CITY OF	48085C0420G	05/30/1996	R6–96–04–000	2
6	TX	PLANO, CITY OF	48085C0420G	04/19/1996	R6–96–04–160	2
6	TX	PLANO, CITY OF	48085C0420G	04/25/1996	R6–96–04–260	2
6	TX	PLANO, CITY OF	48085C0420G	04/25/1996	R6–96–04–260	2
6	TX	PLANO, CITY OF	48085C0420G	05/17/1996	R6–96–05–077	8
6	TX	PLANO, CITY OF	48085C0430G	02/26/1996	96–06–073P	6
6	TX	PLANO, CITY OF	48085C0440G	05/22/1996	95–06–443P	5
6	TX	PLANO, CITY OF	48085C0440G	04/30/1996	R6–96–04–311	2
6	TX	PLANO, CITY OF	48085C0440G	06/20/1996	R6–96–06–236	2
6	TX	PLANO, CITY OF	48085C0445G	05/06/1996	96–06–174P	5
6	TX	PLANO, CITY OF	48085C0445G	02/09/1996	R6–96–02–074	1
6	TX	PLANO, CITY OF	48085C0445G	04/23/1996	R6–96–04–209	2
6	TX	PLANO, CITY OF	48085C0445G	05/28/1996	R6–96–05–279	2
6	TX	PLANO, CITY OF	48085C0445G	06/20/1996	R6–96–06–097	2
6	TX	POLK COUNTY*	4805260009B	05/03/1996	R6–96–04–016	2
6	TX	PORT ISABEL, CITY OF	4801090001B	05/31/1996	96–06–323P	5
6	TX	PORT ISABEL, CITY OF	4801090001B	05/31/1996	96–06–323P	5
6	TX	RICHARDSON, CITY OF	4801840015C	01/31/1996	R6–96–01–307	2
6	TX	ROANOKE, CITY OF	480785	03/07/1996	R6–96–02–331	2
6	TX	ROCKWALL, CITY OF	4805470005C	01/17/1996	R6–96–01–129	2
6	TX	ROCKWALL, CITY OF	4805470005C	04/12/1996	R6–96–04–011	2
6	TX	ROUND ROCK, CITY OF	48491C0000	01/29/1996	R6–96–01–268	8
6	TX	RUSK COUNTY	4809930050B	03/07/1996	R6–96–02–295	2
6	TX	SACHSE, CITY OF	4801860005B	02/01/1996	R6–96–01–301	2
6	TX	SAN ANTONIO, CITY OF	48029C0000	01/19/1996	96–06–058P	6
6	TX	SAN ANTONIO, CITY OF	48029C0000	01/12/1996	R6–96–01–012	8
6	TX	SAN ANTONIO, CITY OF	48029C0241E	03/21/1996	96–06–137P	5
6	TX	SAN ANTONIO, CITY OF	48029C0243E	04/08/1996	96–06–209P	5
6	TX	SAN ANTONIO, CITY OF	48029C0244E	04/08/1996	96–06–209P	5
6	TX	SAN ANTONIO, CITY OF	48029C0244E	04/17/1996	96–06–257P	5
6	TX	SAN ANTONIO, CITY OF	48029C0251E	06/10/1996	96–06–307P	6
6	TX	SAN ANTONIO, CITY OF	48029C0268E	06/14/1996	R6–96–04–063	2
6	TX	SAN ANTONIO, CITY OF	48029C0268E	05/29/1996	R6–96–05–269	2
6	TX	SAN ANTONIO, CITY OF	48029C0283E	04/16/1996	96–06–274P	5
6	TX	SAN ANTONIO, CITY OF	48029C0283E	06/27/1996	96–06–352P	6
6	TX	SAN ANTONIO, CITY OF	48029C0283E	06/10/1996	R6–96–06–028	2
6	TX	SAN ANTONIO, CITY OF	48029C0452E	05/03/1996	R6–96–05–023	2
6	TX	SAN MARCOS, CITY OF	4855050006D	03/06/1996	R6–96–03–019	2
6	TX	SCHERTZ, CITY OF	4802690015D	02/14/1996	95–06–340P	5
6	TX	SCHERTZ, CITY OF	4802690015D	06/20/1996	R6–96–06–148	8

Region	State	Community name	Panel number	Effective date	Case No.	Determination
6	TX	SEABROOK, CITY OF	4855070005B	04/01/1996	R6–96–03–344	2
6	TX	SMITH COUNTY*	4811850250B	01/22/1996	R6–96–01–222	2
6	TX	SMITH COUNTY*	4811850250B	05/24/1996	R6–96–05–155	2
6	TX	SMITH COUNTY*	4811850335B	04/29/1996	R6–96–04–286	2
6	TX	SOUTH LAKE, CITY OF	48439C0195H	05/13/1996	95–06–203P	5
6	TX	SOUTH LAKE, CITY OF	48439C0195H	01/22/1996	96–06–069P	6
6	TX	SOUTH LAKE, CITY OF	48439C0195H	05/22/1996	96–06–179P	5
6	TX	TARRANT COUNTY*	48439C0140H	02/09/1996	R6–96–02–070	2
6	TX	TARRANT COUNTY*	48439C0170H	05/02/1996	R6–96–04–267	2
6	TX	TAYLOR COUNTY*	4810140006B	06/13/1996	R6–96–06–063	2
6	TX	THE COLONY, CITY OF	4815810001B	03/28/1996	R6–96–03–323	2
6	TX	THE COLONY, CITY OF	4815810002A	01/22/1996	R6–96–01–167	2
6	TX	TOMBALL, CITY OF	48201C0040G	06/14/1996	R6–96–06–047	8
6	TX	TOOL, CITY OF	48213C0040C	01/22/1996	R6–96–01–164	2
6	TX	TOOL, CITY OF	48213C0040C	01/22/1996	R6–96–01–218	2
6	TX	TOOL, CITY OF	48213C0040C	04/01/1996	R6–96–03–356	2
6	TX	TOOL, CITY OF	48213C0040C	04/19/1996	R6–96–04–172	2
6	TX	TOOL, CITY OF	48213C0040C	05/30/1996	R6–96–05–253	2
6	TX	TOOL, CITY OF	48213C0045C	03/22/1996	R6–96–03–216	2
6	TX	TRAVIS COUNTY*	48453C0180E	02/26/1996	R6–96–02–256	8
6	TX	TRAVIS COUNTY*	48453C0205E	06/14/1996	R6–96–06–072	2
6	TX	TRAVIS COUNTY*	48453C0215E	05/23/1996	96–06–286A	1
6	TX	TRAVIS COUNTY*	48453C0260E	02/05/1996	R6–96–02–014	1
6	TX	TRAVIS COUNTY*	48453C0300E	03/25/1996	R6–96–03–274	2
6	TX	TRAVIS COUNTY*	48453C0325E	02/09/1996	R6–96–02–071	2
6	TX	TRAVIS COUNTY*	48453C0360E	03/21/1996	R6–96–03–160	2
6	TX	TROPHY CLUB, TOWN OF	4816060005C	03/15/1996	R6–96–03–129	2
6	TX	TYLER, CITY OF	4805710015B	02/20/1996	95–06–359P	6
6	TX	TYLER, CITY OF	4805710018B	04/08/1996	96–06–191A	1
6	TX	TYLER, CITY OF	4805710019B	02/20/1996	95–06–359P	6
6	TX	TYLER, CITY OF	4805710019B	03/06/1996	R6–96–02–281	2
6	TX	UVALDE COUNTY*	4806290335B	03/28/1996	R6–96–03–310	2
6	TX	VICTORIA, CITY OF	4806380005F	05/24/1996	R6–96–05–154	2
6	TX	WATAUGA, TOWN OF	48439C0301H	06/20/1996	R6–96–06–169	8
6	TX	WESLACO, CITY OF	4803490005B	02/13/1996	R6–96–02–129	2
6	TX	WHARTON, CITY OF	4806540005C	01/11/1996	R6–96–01–034	2
6	TX	WHITE OAK, TOWN OF	480841 A	02/16/1996	96–06–109P	6
6	TX	WHITE SETTLEMENT, CITY OF	48439C0265H	05/24/1996	R6–96–05–280	1
6	TX	WICHITA FALLS, CITY OF	4806620015E	02/15/1996	95–06–260P	6
6	TX	WILLIAMSON COUNTY*	48491C0225D	03/26/1996	96–06–151P	5
6	TX	WILLIAMSON COUNTY*	48491C0225D	06/10/1996	96–06–239A	1
6	TX	WILLIAMSON COUNTY*	48491C0230C	04/24/1996	R6–96–04–252	2
6	TX	WILLIAMSON COUNTY*	48491C0325C	01/19/1996	95–06–350P	5
6	TX	WISE COUNTY*	48497C0150C	06/20/1996	R6–96–00–000	2
6	TX	WYLIE, CITY OF	48085C0470G	06/18/1996	R6–96–06–122	2
7	IA	ATLANTIC, CITY OF	1900490005B	01/24/1996	96–07–051A	8
7	IA	BETTENDORF, CITY OF	1902400004D	04/08/1996	2020	1
7	IA	BLACK HAWK COUNTY*	1905350115B	01/16/1996	96–07–090A	2
7	IA	CEDAR FALLS, CITY OF	1900170002B	03/18/1996	2007	2
7	IA	CLIVE, CITY OF	1904880005C	06/24/1996	2075	2
7	IA	CLIVE, CITY OF	1904880005C	02/16/1996	96–07–028A	2
7	IA	CLIVE, CITY OF	1904880005C	01/16/1996	96–07–126A	2
7	IA	CLIVE, CITY OF	1904880005C	01/24/1996	96–07–130A	2
7	IA	DES MOINES, CITY OF	1902270000	01/25/1996	1956	2
7	IA	DES MOINES, CITY OF	1902270003D	03/19/1996	95–07–151P	5
7	IA	DES MOINES, CITY OF	1902270004D	03/19/1996	95–07–151P	5
7	IA	EMMETT COUNTY*	1908650125B	06/24/1996	96–07–259A	2
7	IA	GUTHRIE COUNTY*	1908710000	06/02/1996	2015	2
7	IA	IOWA CITY, CITY OF	1901710005C	02/06/1996	96–07–135A	1
7	IA	IOWA CITY, CITY OF	1901710010C	05/01/1996	96–07–192A	1
7	IA	LINN COUNTY*	1908290015B	05/09/1996	96–07–199A	1
7	IA	MARSHALLTOWN, CITY OF	1902000000	01/31/1996	1959	2
7	IA	MUSCATINE, CITY OF	1902130003B	06/04/1996	2042	2
7	IA	POLK COUNTY*	1909010115C	03/19/1996	95–07–151P	6
7	IA	RIVERDALE, CITY OF	1902450001C	04/30/1996	2033	2
7	IA	TIFFIN, CITY OF	1901730001B	02/02/1996	96–07–131A	2
7	IA	URBANDALE, CITY OF	1902300005C	03/05/1996	96–07–143A	1
7	IA	VAN METER, CITY OF	190362	04/19/1996	2030	2
7	IA	WAVERLY, CITY OF	19017C0054C	01/17/1996	96–07–059A	2
7	IA	WEST DES MOINES, CITY OF	1902310005B	04/11/1996	96–07–165A	8
7	KS	ABILENE, CITY OF	20041C0070C	06/17/1996	96–07–238A	2
7	KS	BEL AIRE, CITY OF	2008640005B	02/13/1996	1990	2
7	KS	CHEROKEE COUNTY*	2000440300B	03/07/1996	96–07–139A	1

Region	State	Community name	Panel number	Effective date	Case No.	Determination
7	KS	COWLEY COUNTY*	2005630095B	02/27/1996	1982	2
7	KS	DERBY, CITY OF	2003230000	01/22/1996	1949	2
7	KS	DERBY, CITY OF	2003230002C	05/30/1996	96–07–209A	1
7	KS	EUDORA, CITY OF	2000890001B	01/16/1996	96–07–102A	2
7	KS	HARVEY COUNTY*	2005850150B	04/19/1996	96–07–186A	2
7	KS	HERINGTON, CITY OF	2000760001B	06/27/1996	96–07–188P	6
7	KS	HUTCHINSON, CITY OF	20155C0285D	01/10/1996	96–07–100A	2
7	KS	HUTCHINSON, CITY OF	20155C0315D	06/19/1996	96–07–211A	2
7	KS	LAWRENCE, CITY OF	2000900005A	01/16/1996	96–07–074A	1
7	KS	LENEXA, CITY OF	20091C0077D	06/26/1996	96–07–271A	2
7	KS	LIBERAL, CITY OF	2003300020C	05/14/1996	2034	2
7	KS	MANHATTAN, CITY OF	2003000000	06/06/1996	2045	2
7	KS	MCPHERSON, CITY OF	2002170005D	05/17/1996	2039	2
7	KS	MCPHERSON, CITY OF	2002170015D	04/29/1996	2032	2
7	KS	MIAMI COUNTY*	200220 A	05/21/1996	96–07–212A	8
7	KS	MORGANVILLE, CITY OF	200055	04/11/1996	2022	2
7	KS	MULVANE, CITY OF	2003260000	06/14/1996	2068	2
7	KS	NEWTON, CITY OF	2001330005C	02/09/1996	1960	2
7	KS	NEWTON, CITY OF	2001330005C	02/02/1996	1966	2
7	KS	NEWTON, CITY OF	2001330005C	06/07/1996	96–07–220A	2
7	KS	OLATHE, CITY OF	20091C0079D	02/23/1996	95–07–157P	5
7	KS	OVERLAND PARK, CITY OF	20091C0079D	02/23/1996	95–07–157P	5
7	KS	OVERLAND PARK, CITY OF	20091C0081E	02/09/1996	1974	2
7	KS	OVERLAND PARK, CITY OF	20091C0085D	02/23/1996	95–07–157P	5
7	KS	OVERLAND PARK, CITY OF	20091C0095D	01/17/1996	96–07–049A	1
7	KS	POTTAWATOMIE COUNTY*	2006210285C	06/12/1996	96–07–198A	1
7	KS	ROELAND PARK, CITY OF	20091C0042D	02/09/1996	1980	2
7	KS	SALINA, CITY OF	2003190015B	01/22/1996	1948	2
7	KS	SALINA, CITY OF	2003190015B	02/09/1996	1985	2
7	KS	SALINA, CITY OF	2003190015B	03/07/1996	1998	2
7	KS	SALINA, CITY OF	2003190015B	03/07/1996	1999	2
7	KS	SALINA, CITY OF	2003190015B	03/25/1996	2011	2
7	KS	SALINA, CITY OF	2003190015B	04/05/1996	2018	2
7	KS	SALINA, CITY OF	2003190015B	05/17/1996	2037	2
7	KS	SALINA, CITY OF	2003190015B	06/11/1996	2055	2
7	KS	SALINA, CITY OF	2003190015B	06/14/1996	2067	2
7	KS	SALINA, CITY OF	2003190015B	06/18/1996	2073	2
7	KS	SALINA, CITY OF	2003190015B	06/25/1996	2076	2
7	KS	SALINA, CITY OF	2003190015B	06/24/1996	2078	2
7	KS	SALINA, CITY OF	2003190015B	01/10/1996	96–07–101A	2
7	KS	SALINE COUNTY*	2003160060B	03/11/1996	2003	2
7	KS	SALINE COUNTY*	2003160060B	06/18/1996	2103	1
7	KS	SALINE COUNTY*	2003160125B	03/11/1996	2002	2
7	KS	SEDGWICK COUNTY*	2003210000	06/13/1996	2066	2
7	KS	SEDGWICK COUNTY*	2003210050A	03/07/1996	2000	1
7	KS	SEDGWICK COUNTY*	2003210125A	02/01/1996	1963	1
7	KS	SEDGWICK COUNTY*	2003210125A	02/05/1996	1971	2
7	KS	SEDGWICK COUNTY*	2003210125A	02/29/1996	1993	2
7	KS	SEDGWICK COUNTY*	2003210150A	01/25/1996	1957	1
7	KS	SEDGWICK COUNTY*	2003210150A	03/13/1996	2005	2
7	KS	SEDGWICK COUNTY*	2003210150A	04/02/1996	2016	1
7	KS	SEDGWICK COUNTY*	2003210150A	02/12/1996	96–07–055P	5
7	KS	SEDGWICK COUNTY*	2003210150A	04/01/1996	96–07–168A	1
7	KS	SEDGWICK COUNTY*	2003210175A	01/24/1996	1954	2
7	KS	SEDGWICK COUNTY*	2003210175A	02/01/1996	1961	2
7	KS	SEDGWICK COUNTY*	2003210225A	02/02/1996	1964	2
7	KS	SEDGWICK COUNTY*	2003210225A	06/25/1996	2077	2
7	KS	SEDGWICK COUNTY*	2003210225A	01/17/1996	96–07–115A	1
7	KS	SEDGWICK COUNTY*	2003210225A	03/05/1996	96–07–166A	2
7	KS	SEDGWICK COUNTY*	2003210225A	05/23/1996	96–07–207A	1
7	KS	SEDGWICK, CITY OF	2001340001D	04/18/1996	2027	1
7	KS	SEDGWICK, CITY OF	2001340001D	05/20/1996	2041	2
7	KS	SEDGWICK, CITY OF	2001340001D	01/17/1996	96–07–103A	2
7	KS	SUMNER COUNTY*	20191C0115B	01/16/1996	95–07–218A	2
7	KS	WICHITA, CITY OF	2003280000	03/22/1996	2006	8
7	KS	WICHITA, CITY OF	2003280000	02/06/1996	96–07–133A	1
7	KS	WICHITA, CITY OF	2003280005B	03/05/1996	96–07–144A	1
7	KS	WICHITA, CITY OF	2003280005B	06/24/1996	96–07–218A	1
7	KS	WICHITA, CITY OF	2003280005B	06/27/1996	96–07–264A	1
7	KS	WICHITA, CITY OF	2003280015B	06/06/1996	2052	2
7	KS	WICHITA, CITY OF	2003280020B	02/02/1996	1962	2
7	KS	WICHITA, CITY OF	2003280020B	02/29/1996	1995	2
7	KS	WICHITA, CITY OF	2003280020B	06/11/1996	2057	2

Region	State	Community name	Panel number	Effective date	Case No.	Determination
7	KS	WICHITA, CITY OF	2003280020B	02/12/1996	96–07–029A	1
7	KS	WICHITA, CITY OF	2003280020B	01/17/1996	96–07–097A	8
7	KS	WICHITA, CITY OF	2003280020B	01/10/1996	96–07–104A	1
7	KS	WICHITA, CITY OF	2003280025B	06/14/1996	2065	2
7	KS	WICHITA, CITY OF	2003280025B	01/10/1996	96–07–106A	1
7	KS	WICHITA, CITY OF	2003280030B	02/02/1996	1965	2
7	KS	WICHITA, CITY OF	2003280030B	02/13/1996	1992	2
7	KS	WICHITA, CITY OF	2003280030B	02/29/1996	1996	2
7	KS	WICHITA, CITY OF	2003280030B	06/06/1996	2047	2
7	KS	WICHITA, CITY OF	2003280030B	06/11/1996	2059	2
7	KS	WICHITA, CITY OF	2003280030B	01/16/1996	96–07–117A	2
7	KS	WICHITA, CITY OF	2003280030B	04/15/1996	96–07–185A	2
7	KS	WICHITA, CITY OF	2003280035B	02/09/1996	1983	2
7	KS	WICHITA, CITY OF	2003280035B	02/29/1996	1994	2
7	KS	WICHITA, CITY OF	2003280035B	03/13/1996	2004	2
7	KS	WICHITA, CITY OF	2003280035B	04/10/1996	2023	2
7	KS	WICHITA, CITY OF	2003280035B	06/04/1996	2043	2
7	KS	WICHITA, CITY OF	2003280035B	06/04/1996	2044	2
7	KS	WICHITA, CITY OF	2003280035B	06/12/1996	2061	2
7	KS	WICHITA, CITY OF	2003280035B	01/23/1996	96–07–067A	2
7	MO	ARNOLD, CITY OF	2901880001B	06/12/1996	2064	1
7	MO	BALLWIN, CITY OF	29189C0000	03/25/1996	2008	2
7	MO	BRIDGETON, CITY OF	29189C0037H	03/05/1996	96–07–132P	6
7	MO	BRIDGETON, CITY OF	29189C0038H	03/05/1996	96–07–132P	6
7	MO	BRIDGETON, CITY OF	29189C0039H	03/05/1996	96–07–132P	6
7	MO	BRIDGETON, CITY OF	29189C0043H	03/05/1996	96–07–132P	6
7	MO	CAMDEN COUNTY*	2907890002B	01/12/1996	1931	2
7	MO	CAMDEN COUNTY*	2907890006B	02/05/1996	1967	2
7	MO	CAPE GIRARDEAU, CITY OF	2904580007B	03/11/1996	1984	2
7	MO	CASS COUNTY*	2907830000	01/24/1996	1950	2
7	MO	CASS COUNTY*	2907830025C	01/16/1996	96–07–118A	2
7	MO	CASS COUNTY*	2907830100C	02/20/1996	96–07–107A	2
7	MO	CASS COUNTY*	2907830100C	01/16/1996	96–07–123A	2
7	MO	CASS COUNTY*	2907830100C	06/27/1996	96–07–236A	2
7	MO	CASS COUNTY*	2907830125B	02/20/1996	96–07–099A	2
7	MO	CHESTERFIELD, CITY OF	29189C0138H	01/10/1996	96–07–023A	1
7	MO	CLARKSON VALLEY, CITY OF	29189C0000	01/29/1996	1977	2
7	MO	ELSBERRY, CITY OF	2902090001C	04/10/1996	96–07–119A	8
7	MO	FLORISSANT, CITY OF	29189C0054H	04/19/1996	2028	2
7	MO	FLORISSANT, CITY OF	29189C0054H	06/19/1996	96–07–248A	1
7	MO	GREENE COUNTY*	2907820030B	06/07/1996	96–07–201A	2
7	MO	HERMANN, CITY OF	290141 B	05/15/1996	96–07–178A	1
7	MO	JACKSON, CITY OF	2952650001C	04/08/1996	2019	1
7	MO	JEFFERSON COUNTY*	2908080000	01/24/1996	1952	2
7	MO	JEFFERSON COUNTY*	2908080085C	01/17/1996	96–07–128A	1
7	MO	JEFFERSON COUNTY*	2908080085C	04/02/1996	96–07–136A	1
7	MO	JEFFERSON COUNTY*	2908080090D	01/10/1996	96–07–092A	2
7	MO	LADUE,CITY OF	29189C0169H	03/20/1996	96–07–179A	2
7	MO	LADUE,CITY OF	29189C0282H	01/10/1996	96–07–068A	2
7	MO	LAKE WINNEBAGO, CITY OF	2908770001A	05/17/1996	2036	2
7	MO	LEE'S SUMMIT, CITY OF	2901740009C	05/15/1996	96–07–147P	5
7	MO	LEE'S SUMMIT, CITY OF	2901740014C	06/20/1996	95–07–168P	5
7	MO	LEE'S SUMMIT, CITY OF	2901740022C	06/20/1996	95–07–168P	5
7	MO	MARYLAND HEIGHTS, CITY OF	29189C0038H	03/05/1996	96–07–132P	6
7	MO	MARYLAND HEIGHTS, CITY OF	29189C0039H	03/05/1996	96–07–132P	6
7	MO	MARYLAND HEIGHTS, CITY OF	29189C0151H	03/05/1996	96–07–132P	6
7	MO	MARYLAND HEIGHTS, CITY OF	29189C0152H	02/13/1996	1989	2
7	MO	MARYLAND HEIGHTS, CITY OF	29189C0152H	03/05/1996	96–07–132P	6
7	MO	NODAWAY COUNTY*	2908210025B	05/09/1996	96–07–206A	8
7	MO	O'FALLON, CITY OF	29183C0105D	06/13/1996	96–07–196A	1
7	MO	O'FALLON, CITY OF	29183C0116D	06/27/1996	96–07–194A	1
7	MO	PACIFIC, CITY OF	2901340001C	01/12/1996	1941	2
7	MO	PACIFIC, CITY OF	2901340001C	02/16/1996	95–07–210A	2
7	MO	PLATTE COUNTY*	2904750165A	02/06/1996	1973	2
7	MO	POLK COUNTY*	2908250125A	04/17/1996	96–07–181A	2
7	MO	PULASKI COUNTY*	2908260000	06/06/1996	2048	8
7	MO	RAYMORE, CITY OF	290070 A	06/12/1996	96–07–149P	6
7	MO	ST. CHARLES COUNTY*	29183C0000	01/25/1996	1958	2
7	MO	ST. CHARLES COUNTY*	29183C0115D	01/10/1996	96–07–116A	1
7	MO	ST. CHARLES COUNTY*	29183C0115D	02/29/1996	96–07–158A	1
7	MO	ST. CHARLES COUNTY*	29183C0120D	02/06/1996	96–07–012A	1
7	MO	ST. CHARLES, CITY OF	29183C0166D	02/06/1996	1928	1
7	MO	ST. CHARLES, CITY OF	29183C0166D	03/25/1996	2010	2

Region	State	Community name	Panel number	Effective date	Case No.	Determination
7	MO	ST. CHARLES, CITY OF	29183C0166D	03/26/1996	380	2
7	MO	ST. CHARLES, CITY OF	29183C0170D	04/18/1996	2029	2
7	MO	ST. CHARLES, CITY OF	29183C0170D	06/11/1996	2058	2
7	MO	ST. CHARLES, CITY OF	29183C0170D	03/28/1996	96–07–169A	2
7	MO	ST. FRANCOIS COUNTY*	2908320125B	02/16/1996	96–07–079A	2
7	MO	ST. FRANCOIS COUNTY*	2908320150B	01/25/1996	1955	2
7	MO	ST. LOUIS COUNTY*	29189C0038H	03/05/1996	96–07–132P	6
7	MO	ST. LOUIS COUNTY*	29189C0039H	03/05/1996	96–07–132P	6
7	MO	ST. LOUIS COUNTY*	29189C0058H	01/16/1996	95–07–204A	8
7	MO	ST. LOUIS COUNTY*	29189C0058H	01/16/1996	96–07–057A	2
7	MO	ST. LOUIS COUNTY*	29189C0058H	04/25/1996	96–07–167A	1
7	MO	ST. LOUIS COUNTY*	29189C0267H	01/22/1996	1906	1
7	MO	ST. LOUIS COUNTY*	29189C0278H	01/17/1996	96–07–121A	1
7	MO	ST. LOUIS COUNTY*	29189C0278H	04/01/1996	96–07–175A	2
7	MO	ST. LOUIS COUNTY*	29189C0279H	03/19/1996	96–07–170A	1
7	MO	ST. LOUIS COUNTY*	29189C0312H	01/17/1996	96–07–039A	1
7	MO	ST. LOUIS COUNTY*	29189C0312H	02/14/1996	96–07–122A	1
7	MO	ST. LOUIS COUNTY*	29189C0312H	05/06/1996	96–07–208A	1
7	MO	ST. LOUIS COUNTY*	29189C0315H	01/17/1996	96–07–039A	1
7	MO	ST. LOUIS COUNTY*	29189C0315H	02/14/1996	96–07–122A	1
7	MO	ST. LOUIS COUNTY*	29189C0315H	05/06/1996	96–07–208A	1
7	MO	ST. LOUIS COUNTY*	29189C0316H	01/17/1996	96–07–086A	1
7	MO	ST. LOUIS COUNTY*	29189C0320H	06/19/1996	96–07–233A	1
7	MO	ST. LOUIS COUNTY*	29189C0405H	02/09/1996	1976	1
7	MO	ST. LOUIS COUNTY*	29189C0405H	02/20/1996	96–07–129A	2
7	MO	ST. LOUIS COUNTY*	29189C0415H	01/19/1996	96–07–085P	6
7	MO	ST. PETERS, CITY OF	29183C0120D	06/10/1996	2031	1
7	MO	ST. PETERS, CITY OF	29183C0120D	06/06/1996	2050	2
7	MO	ST. PETERS, CITY OF	29183C0120D	01/10/1996	95–07–229A	1
7	MO	UNIVERSITY CITY, CITY OF	29189C0000	05/22/1996	96–07–214A	1
7	MO	VALLEY PARK, CITY OF	29189C0278H	06/12/1996	96–07–210A	1
7	MO	WARREN COUNTY	2904430125B	03/07/1996	1997	2
7	MO	WELDON SPRING, CITY OF	29183C0115D	04/16/1996	96–07–150A	1
7	NE	BELLEVUE, CITY OF	31153C0000	02/22/1996	1988	2
7	NE	CEDAR CREEK, VILLAGE OF	3100300005A	06/06/1996	2051	8
7	NE	CRETE, CITY OF	3101860001C	01/23/1996	96–07–072A	1
7	NE	CRETE, CITY OF	3101860001C	03/29/1996	96–07–155A	1
7	NE	DANNEBROG, VILLAGE OF	3101180001A	01/10/1996	96–07–095A	2
7	NE	DODGE COUNTY*	3100680150B	02/09/1996	1986	2
7	NE	DOUGLAS COUNTY*	3100730125B	02/13/1996	1991	2
7	NE	ELM CREEK, VILLAGE OF	3100140005B	01/17/1996	96–07–094A	2
7	NE	FREMONT, CITY OF	3100690001C	05/28/1996	96–07–195A	1
7	NE	FREMONT, CITY OF	3100690002C	02/21/1996	96–07–145A	1
7	NE	GRAND ISLAND, CITY OF	3101030000	01/16/1996	1945	8
7	NE	GRAND ISLAND, CITY OF	3101030000	02/12/1996	1987	8
7	NE	GRAND ISLAND, CITY OF	3101030000	05/14/1996	2035	2
7	NE	GRAND ISLAND, CITY OF	3101030000	06/12/1996	2062	2
7	NE	GRAND ISLAND, CITY OF	3101030005B	01/24/1996	1951	2
7	NE	GRAND ISLAND, CITY OF	3101030005B	06/11/1996	2053	1
7	NE	GRAND ISLAND, CITY OF	3101030005B	06/11/1996	2056	2
7	NE	GRAND ISLAND, CITY OF	3101030005B	04/02/1996	96–07–190A	1
7	NE	GRAND ISLAND, CITY OF	3101030005B	06/24/1996	96–07–258A	2
7	NE	GRAND ISLAND, CITY OF	3101030010B	01/25/1996	1953	2
7	NE	GRAND ISLAND, CITY OF	3101030010B	04/11/1996	2024	1
7	NE	GRAND ISLAND, CITY OF	3101030010B	02/29/1996	96–07–160A	2
7	NE	GRAND ISLAND, CITY OF	3101030015B	01/12/1996	1944	2
7	NE	GRAND ISLAND, CITY OF	3101030015B	01/12/1996	1947	2
7	NE	GRAND ISLAND, CITY OF	3101030015B	02/05/1996	1970	2
7	NE	GRAND ISLAND, CITY OF	3101030015B	02/09/1996	1979	2
7	NE	GRAND ISLAND, CITY OF	3101030015B	04/08/1996	2017	2
7	NE	GRAND ISLAND, CITY OF	3101030015B	05/17/1996	2038	2
7	NE	GRAND ISLAND, CITY OF	3101030015B	06/12/1996	2060	2
7	NE	GRAND ISLAND, CITY OF	3101030015B	06/28/1996	2079	2
7	NE	GRAND ISLAND, CITY OF	3101030020B	02/05/1996	1968	1
7	NE	GRAND ISLAND, CITY OF	3101030020B	02/05/1996	1969	1
7	NE	GRAND ISLAND, CITY OF	3101030020B	02/13/1996	1975	2
7	NE	GRAND ISLAND, CITY OF	3101030020B	04/11/1996	2024	1
7	NE	GRAND ISLAND, CITY OF	3101030020B	04/12/1996	2025	2
7	NE	GRAND ISLAND, CITY OF	3101030020B	01/10/1996	96–07–108A	1
7	NE	HALL COUNTY*	3101000100C	02/09/1996	1978	2
7	NE	HICKMAN, VILLAGE OF	3101360002A	01/16/1996	96–07–064A	2
7	NE	LANCASTER COUNTY*	3101340135B	06/27/1996	96–07–222P	6
7	NE	LINCOLN, CITY OF	3152730037D	01/16/1996	96–07–093A	2

Region	State	Community name	Panel number	Effective date	Case No.	Determination
7	NE	OMAHA, CITY OF	3152740025F	06/07/1996	96–07–230A	2
7	NE	OMAHA, CITY OF	3152740045F	06/06/1996	96–07–189P	5
7	NE	OMAHA, CITY OF	3152740045F	06/27/1996	96–07–200A	1
7	NE	OMAHA, CITY OF	3152740045F	05/22/1996	96–07–213A	2
7	NE	PAPILLION, CITY OF	31153C0065F	01/10/1996	96–07–113A	1
7	NE	PLATTE COUNTY*	3104670008B	06/04/1996	96–07–202A	2
7	NE	SCHUYLER, CITY OF	3100460005B	03/25/1996	2009	2
7	NE	SCOTTS BLUFF COUNTY*	3104730200A	06/11/1996	2054	2
7	NE	SIDNEY, CITY OF	3100390010B	05/21/1996	2040	1
7	NE	WATERLOO, VILLAGE OF	3100790005C	06/05/1996	2049	2
7	NE	WAUNETA, VILLAGE OF	3100370001B	05/16/1996	96–07–140P	8
7	NE	WAYNE, CITY OF	3102310004B	01/17/1996	96–07–078A	1
8	CO	ADAMS COUNTY*	08001C0017G	05/24/1996	96–08–244P	5
8	CO	ADAMS COUNTY*	08001C0309G	01/10/1996	96–08–034A	1
8	CO	ADAMS COUNTY*	08001C0309G	03/13/1996	96–08–117A	1
8	CO	ARAPAHOE COUNTY*	08005C0480J	01/16/1996	95–08–223P	5
8	CO	ARCHULETA COUNTY*	0802730275B	01/23/1996	96–08–047P	5
8	CO	AURORA, CITY OF	0800020180E	04/16/1996	96–08–158P	5
8	CO	AURORA, CITY OF	0800020185E	01/25/1996	96–08–048A	1
8	CO	AURORA, CITY OF	0800020185E	02/21/1996	96–08–094A	2
8	CO	AURORA, CITY OF	0800020185E	05/02/1996	96–08–223A	1
8	CO	AURORA, CITY OF	0800020205E	01/18/1996	96–08–062A	1
8	CO	BOULDER, CITY OF	08013C0395F	01/16/1996	96–08–019P	5
8	CO	BOULDER, CITY OF	08013C0395F	02/22/1996	96–08–103A	2
8	CO	BOULDER, CITY OF	08013C0395F	05/21/1996	96–08–215A	1
8	CO	BOULDER, CITY OF	08013C0395F	05/21/1996	96–08–215A	2
8	CO	BOULDER, CITY OF	08013C0395F	06/28/1996	96–08–282A	2
8	CO	BOULDER, CITY OF	08013C0395F	06/28/1996	96–08–283A	2
8	CO	BOULDER, CITY OF	08013C0395F	06/28/1996	96–08–287A	1
8	CO	BOULDER, CITY OF	08013C0395F	06/28/1996	96–08–288A	1
8	CO	BOULDER, CITY OF	08013C0415F	01/16/1996	96–08–019P	5
8	CO	BOULDER, CITY OF	08013C0415F	06/20/1996	96–08–222A	2
8	CO	BOULDER, CITY OF	08013C0535F	06/28/1996	96–08–289A	2
8	CO	BROOMFIELD, CITY OF	0850730220D	05/16/1996	96–08–056P	5
8	CO	CASTLE ROCK, TOWN OF	0800500188C	06/18/1996	96–08–181P	5
8	CO	CHAFFEE COUNTY*	0802690210B	04/05/1996	96–08–110A	2
8	CO	CHAFFEE COUNTY*	0802690375B	03/01/1996	96–08–101A	2
8	CO	CHAFFEE COUNTY*	0802690400B	03/01/1996	96–08–101A	2
8	CO	COLORADO SPRINGS, CITY OF	0800600134C	01/22/1996	96–08–032P	5
8	CO	COLORADO SPRINGS, CITY OF	0800600153C	01/22/1996	96–08–032P	5
8	CO	COLORADO SPRINGS, CITY OF	0800600164E	02/08/1996	96–08–089A	2
8	CO	COLUMBINE VALLEY, TOWN OF	08005C0435J	02/06/1996	96–08–023P	6
8	CO	DENVER, CITY AND COUNTY OF	0800460009C	04/19/1996	96–08–173A	2
8	CO	DENVER, CITY AND COUNTY OF	0800460012E	04/16/1996	96–08–158P	5
8	CO	DENVER, CITY AND COUNTY OF	0800460014C	03/07/1996	96–08–128P	5
8	CO	DENVER, CITY AND COUNTY OF	0800460016C	04/16/1996	96–08–158P	5
8	CO	DENVER, CITY AND COUNTY OF	0800460017C	06/27/1996	96–08–240A	1
8	CO	EL PASO COUNTY*	0800590293C	05/06/1996	96–08–191A	2
8	CO	ENGLEWOOD, CITY OF	08005C0145J	04/18/1996	96–08–142A	1
8	CO	ENGLEWOOD, CITY OF	08005C0145J	05/01/1996	96–08–217A	1
8	CO	ERIE, TOWN OF	0801810001D	05/24/1996	96–08–198P	5
8	CO	FORT COLLINS, CITY OF	0801020012C	05/31/1996	96–08–229A	1
8	CO	GARFIELD COUNTY*	0802051352B	05/31/1996	96–08–171P	5
8	CO	GOLDEN, CITY OF	0800900003A	01/11/1996	95–08–283P	5
8	CO	JEFFERSON COUNTY*	0800870290B	03/19/1996	96–08–077P	5
8	CO	JEFFERSON COUNTY*	0800870380C	06/06/1996	96–08–220A	2
8	CO	LA PLATA COUNTY*	0800970386B	02/08/1996	96–08–015A	2
8	CO	LAKEWOOD, CITY OF	0850750005C	06/07/1996	96–08–241P	5
8	CO	LITTLETON, CITY OF	0800170005D	02/06/1996	96–08–023P	5
8	CO	LITTLETON, CITY OF	0800170010D	02/06/1996	96–08–023P	5
8	CO	LITTLETON, CITY OF	0800170010D	03/11/1996	96–08–092P	5
8	CO	LONGMONT, CITY OF	08013C0286F	05/01/1996	96–08–180A	2
8	CO	LOUISVILLE, CITY OF	08013C0560F	03/19/1996	96–08–049P	5
8	CO	MESA COUNTY*	0801150460B	05/03/1996	96–08–091A	2
8	CO	MONTROSE, CITY OF	0801250001C	01/10/1996	95–08–245A	1
8	CO	PAGOSA SPRINGS, TOWN OF	0800190005C	01/23/1996	96–08–047P	5
8	CO	RIFLE, CITY OF	0850781352D	05/31/1996	96–08–171P	5
8	CO	RIO BLANCO COUNTY*	0802880250A	04/24/1996	96–08–082A	2
8	CO	SEVERANCE, TOWN OF	0802660475C	01/19/1996	96–08–063A	1
8	CO	STEAMBOAT SPRINGS, TOWN OF	0801590002C	01/10/1996	95–08–267A	1
8	CO	STEAMBOAT SPRINGS, TOWN OF	0801590002C	06/05/1996	96–08–218A	1
8	CO	SUMMIT COUNTY*	0802900119C	02/08/1996	95–08–227P	5
8	CO	SUMMIT COUNTY*	0802900182C	02/08/1996	95–08–227P	5

Region	State	Community name	Panel number	Effective date	Case No.	Determination
8	CO	THORNTON, CITY OF	08001C0035G	05/23/1996	96–08–187A	2
8	CO	THORNTON, CITY OF	08001C0045G	02/20/1996	96–08–074A	2
8	CO	WELD COUNTY*	0802660960D	06/28/1996	96–08–163A	1
8	CO	WELD COUNTY*	0802660960D	05/24/1996	96–08–198P	5
8	CO	WINDSOR, CITY OF	0802640005A	03/01/1996	96–08–119A	1
8	MT	BEAVERHEAD COUNTY*	3000011438A	03/05/1996	96–08–116A	2
8	MT	DENTON, TOWN OF	3000200001A	02/23/1996	96–08–035P	5
8	MT	FLATHEAD COUNTY*	3000231060C	06/06/1996	96–08–206A	2
8	MT	FLATHEAD COUNTY*	3000231820E	04/03/1996	96–08–137A	1
8	MT	FLATHEAD COUNTY*	3000232315D	06/28/1996	96–08–273A	2
8	MT	FLATHEAD COUNTY*	3000232315D	06/28/1996	96–08–293A	2
8	MT	JEFFERSON COUNTY*	3001540550B	04/18/1996	96–08–164A	2
8	MT	LINCOLN COUNTY*	3001570620B	02/21/1996	96–08–079A	2
8	MT	LINCOLN COUNTY*	3001570620B	04/03/1996	96–08–152A	2
8	MT	LINCOLN COUNTY*	3001570650B	04/24/1996	96–08–160A	2
8	MT	LINCOLN COUNTY*	3001570650B	04/24/1996	96–08–168A	2
8	MT	LINCOLN COUNTY*	3001570650B	05/10/1996	96–08–185A	2
8	MT	MISSOULA COUNTY*	30063C0875D	04/11/1996	96–08–165A	2
8	MT	MISSOULA COUNTY*	30063C0875D	06/28/1996	96–08–174A	2
8	MT	MISSOULA COUNTY*	30063C0875D	05/29/1996	96–08–216A	2
8	MT	MISSOULA COUNTY*	30063C1540D	01/29/1996	96–08–073A	2
8	MT	MISSOULA, CITY OF	30063C1460D	05/23/1996	96–08–224A	2
8	MT	MISSOULA, CITY OF	30063C1480D	06/19/1996	96–08–228A	2
8	MT	NASHUA, TOWN OF	300082 B	06/20/1996	96–08–234A	2
8	MT	PARK COUNTY*	3001600017B	06/06/1996	96–08–104A	2
8	MT	PARK COUNTY*	3001600030B	04/05/1996	96–08–154A	2
8	MT	RED LODGE, CITY OF	3000070001B	03/06/1996	96–08–090A	2
8	MT	THREE FORKS, TOWN OF	3000290001B	06/12/1996	96–08–134A	1
8	MT	THREE FORKS, TOWN OF	3000290001B	04/05/1996	96–08–151A	1
8	ND	BARRIE, TOWNSHIP OF	3806610025B	01/22/1996	96–08–038A	2
8	ND	BARRIE, TOWNSHIP OF	3806610025B	01/16/1996	96–08–041A	2
8	ND	BISMARCK, CITY OF	3801490020A	04/15/1996	96–08–196A	1
8	ND	BISMARCK, CITY OF	3801490025A	02/07/1996	96–08–095A	1
8	ND	BISMARCK, CITY OF	3801490025A	03/01/1996	96–08–133A	1
8	ND	BISMARCK, CITY OF	3801490025A	05/01/1996	96–08–192A	1
8	ND	BISMARCK, CITY OF	3801490025A	05/23/1996	96–08–230A	2
8	ND	CENTER,TOWNSHIP OF	3806480005B	06/07/1996	96–08–235A	2
8	ND	FARGO, CITY OF	3853640030D	01/23/1996	96–08–066A	1
8	ND	FARGO, CITY OF	3853640030D	03/08/1996	96–08–145A	1
8	ND	GRAND FORKS, CITY OF	3853650005D	04/15/1996	96–08–064A	8
8	ND	GRAND FORKS, CITY OF	3853650010D	01/10/1996	96–08–053A	2
8	ND	GRAND FORKS, CITY OF	3853650010D	01/10/1996	96–08–065A	2
8	ND	GRAND FORKS, CITY OF	3853650010D	01/26/1996	96–08–070A	2
8	ND	GRAND FORKS, CITY OF	3853650010D	01/26/1996	96–08–075A	2
8	ND	GRAND FORKS, CITY OF	3853650010D	02/07/1996	96–08–099A	2
8	ND	GRAND FORKS, CITY OF	3853650010D	02/21/1996	96–08–106A	2
8	ND	GRAND FORKS, CITY OF	3853650010D	05/10/1996	96–08–136P	5
8	ND	GRAND FORKS, CITY OF	3853650010D	05/10/1996	96–08–210A	2
8	ND	GRAND FORKS, CITY OF	3853650010D	06/07/1996	96–08–239A	2
8	ND	GRAND FORKS, CITY OF	3853650010D	06/12/1996	96–08–259A	2
8	ND	GRAND FORKS, CITY OF	3853650010D	06/07/1996	96–08–260A	2
8	ND	GRAND FORKS, CITY OF	3853650010D	06/28/1996	96–08–274A	2
8	ND	GRAND FORKS, CITY OF	3853650020D	05/10/1996	96–08–136P	5
8	ND	LISBON, CITY OF	3800910001B	04/02/1996	96–08–076A	1
8	ND	MANDAN, CITY OF	3800720020B	04/23/1996	96–08–162A	2
8	ND	NOBLE, TOWNSHIP OF	3802680025A	02/20/1996	96–08–107A	1
8	ND	PLEASANT, TOWNSHIP OF	3802630025A	06/06/1996	96–08–148A	2
8	ND	RAYMOND, TOWNSHIP OF	3802610001B	06/17/1996	96–08–264A	1
8	ND	THOMPSON, CITY OF	3802080001B	05/01/1996	96–08–193A	2
8	ND	VALLEY CITY, CITY OF	3800020004E	06/19/1996	96–08–262A	1
8	ND	WAHPETON,CITY OF	3801000004C	05/21/1996	96–08–194A	2
8	ND	WARD COUNTY*	3853700655B	05/02/1996	96–08–153A	2
8	ND	WISER, TOWNSHIP OF	3802670005B	04/15/1996	96–08–172A	1
8	SD	ABERDEEN, CITY OF	46013C0245C	03/18/1996	96–08–139A	2
8	SD	ABERDEEN, CITY OF	46013C0245C	03/28/1996	96–08–140A	2
8	SD	ABERDEEN, CITY OF	46013C0245C	05/09/1996	96–08–182A	1
8	SD	CODINGTON COUNTY*	4602600005B	02/13/1996	96–08–072A	2
8	SD	FORT PIERRE, CITY OF	4654190001D	01/24/1996	95–08–281A	8
8	SD	FORT PIERRE, CITY OF	4654190001D	01/23/1996	96–08–055A	8
8	SD	LINCOLN COUNTY*	4602770004B	01/19/1996	96–08–052A	2
8	SD	LINCOLN COUNTY*	4602770004B	06/06/1996	96–08–233A	2
8	SD	MEADE COUNTY*	4600540625A	01/10/1996	96–08–011A	2
8	SD	NORTH SIOUX CITY, CITY OF	4600870005C	04/02/1996	96–08–155A	2

Region	State	Community name	Panel number	Effective date	Case No.	Determination
8	SD	NORTH SIOUX CITY, CITY OF	4600870005C	05/07/1996	96–08–202A	2
8	SD	PENNINGTON COUNTY*	4600640758B	06/18/1996	96–08–093P	5
8	SD	PENNINGTON COUNTY*	4600640759B	06/18/1996	96–08–093P	5
8	SD	PENNINGTON COUNTY*	4600640766B	06/18/1996	96–08–093P	5
8	SD	PENNINGTON COUNTY*	4600640767B	06/18/1996	96–08–093P	5
8	SD	RAPID CITY, CITY OF	4654200012F	05/16/1996	96–08–071P	6
8	SD	ROBERTS COUNTY*	4602860007B	03/08/1996	96–08–004A	2
8	SD	SPEARFISH, CITY OF	4600460005D	04/02/1996	96–08–125A	1
8	SD	UNION COUNTY*	460242 C	01/10/1996	96–08–039A	1
8	SD	UNION COUNTY*	460242 C	01/10/1996	96–08–050A	1
8	SD	UNION COUNTY*	460242 C	01/10/1996	96–08–054A	1
8	UT	LINDON, CITY OF	4902100005C	06/19/1996	96–08–237A	1
8	UT	MORGAN COUNTY*	4900920050B	05/10/1996	96–08–213A	2
8	UT	MURRAY, CITY OF	4901030001C	02/13/1996	96–08–088A	2
8	UT	NIBLEY, TOWN OF	490023 A	02/13/1996	96–08–046A	2
8	UT	PARK CITY, CITY OF	4901390005B	01/10/1996	96–08–059P	6
8	UT	RICHMOND, CITY OF	4900270005A	06/17/1996	96–08–100A	2
8	UT	SOUTH JORDAN, CITY OF	4901070009C	03/26/1996	96–08–149A	2
8	UT	TOQUERVILLE, CITY OF	4901800005A	03/22/1996	96–08–108A	2
8	UT	WEBER COUNTY*	4901870225B	02/13/1996	96–08–067A	1
8	UT	WEBER COUNTY*	4901870250B	02/13/1996	96–08–067A	1
8	UT	WEBER COUNTY*	4901870250B	02/26/1996	96–08–068A	2
8	UT	WEBER COUNTY*	4901870250B	04/24/1996	96–08–069A	2
8	UT	WEBER COUNTY*	4901870250B	06/06/1996	96–08–253A	2
8	WY	GILLETTE, CITY OF	5600070005C	03/01/1996	96–08–087A	1
8	WY	LARAMIE COUNTY*	5600290520E	06/03/1996	96–08–246A	2
8	WY	SHERIDAN COUNTY*	5600470019C	05/01/1996	96–08–183A	2
8	WY	UINTA COUNTY*	5600530275B	03/26/1996	96–08–130A	2
8	WY	UINTA COUNTY*	5600530275B	03/26/1996	96–08–132A	2
9	AZ	BULLHEAD CITY, CITY OF	0401250005D	01/18/1996	95–09–902P	8
9	AZ	CHANDLER, CITY OF	04013C0000	01/26/1996	96–09–227A	2
9	AZ	CHANDLER, CITY OF	04013C0000	03/26/1996	96–09–463A	2
9	AZ	CLARKDALE, TOWN OF	0400950002B	01/30/1996	95–09–1036P	6
9	AZ	COCHISE COUNTY*	0400120070B	06/06/1996	96–09–668A	2
9	AZ	FLAGSTAFF, CITY OF	0400200009B	04/22/1996	96–09–535P	5
9	AZ	GILA COUNTY*	0400280245B	06/19/1996	96–09–737A	2
9	AZ	GILBERT, TOWN OF	04013C2660E	01/10/1996	96–09–200A	1
9	AZ	GILBERT, TOWN OF	04013C2660E	02/08/1996	96–09–343A	1
9	AZ	GILBERT, TOWN OF	04013C2660E	02/21/1996	96–09–375A	1
9	AZ	GILBERT, TOWN OF	04013C2660E	04/03/1996	96–09–521A	1
9	AZ	GILBERT, TOWN OF	04013C2660E	04/19/1996	96–09–581A	1
9	AZ	GILBERT, TOWN OF	04013C2660E	05/09/1996	96–09–674A	1
9	AZ	GILBERT, TOWN OF	04013C2660E	05/29/1996	96–09–756A	1
9	AZ	GILBERT, TOWN OF	04013C2660E	06/12/1996	96–09–795A	1
9	AZ	GILBERT, TOWN OF	04013C2680F	01/16/1996	96–09–243A	1
9	AZ	GILBERT, TOWN OF	04013C2680F	02/07/1996	96–09–333A	1
9	AZ	GILBERT, TOWN OF	04013C2680F	03/01/1996	96–09–414A	1
9	AZ	GILBERT, TOWN OF	04013C2680F	04/05/1996	96–09–530A	1
9	AZ	GILBERT, TOWN OF	04013C2680F	04/24/1996	96–09–641A	1
9	AZ	GLENDALE, CITY OF	04013C1190F	01/10/1996	95–09–1015A	1
9	AZ	GLENDALE, CITY OF	04013C1190F	02/26/1996	95–09–1037P	5
9	AZ	GLENDALE, CITY OF	04013C1190F	01/10/1996	96–09–225A	1
9	AZ	GLENDALE, CITY OF	04013C1190F	02/13/1996	96–09–365A	1
9	AZ	GLENDALE, CITY OF	04013C1190F	03/26/1996	96–09–497A	1
9	AZ	GLENDALE, CITY OF	04013C1190F	05/31/1996	96–09–711A	1
9	AZ	GLENDALE, CITY OF	04013C1195D	02/26/1996	95–09–1037P	5
9	AZ	GLENDALE, CITY OF	04013C1195D	03/26/1996	96–09–497A	1
9	AZ	GLENDALE, CITY OF	04013C1195D	05/31/1996	96–09–711A	1
9	AZ	GLENDALE, CITY OF	04013C1615H	05/31/1996	96–09–777P	6
9	AZ	LA PAZ COUNTY*	0401220018A	01/10/1996	96–09–214A	2
9	AZ	MARICOPA COUNTY*	04013C0815G	03/26/1996	96–09–494A	8
9	AZ	MARICOPA COUNTY*	04013C1300E	06/28/1996	96–09–355P	6
9	AZ	MARICOPA COUNTY*	04013C1615H	05/31/1996	96–09–777P	6
9	AZ	MESA, CITY OF	04013C2180E	06/12/1996	96–09–800A	2
9	AZ	MESA, CITY OF	04013C2185E	01/29/1996	96–09–296A	1
9	AZ	MESA, CITY OF	04013C2195E	03/07/1996	96–09–458A	1
9	AZ	MESA, CITY OF	04013C2195E	04/15/1996	96–09–553A	1
9	AZ	MESA, CITY OF	04013C2195E	05/10/1996	96–09–619A	1
9	AZ	MESA, CITY OF	04013C2195E	06/12/1996	96–09–779A	1
9	AZ	MESA, CITY OF	04013C2195E	06/12/1996	96–09–804A	1
9	AZ	MESA, CITY OF	04013C2205E	02/21/1996	96–09–353A	2
9	AZ	MESA, CITY OF	04013C2215F	06/19/1996	96–09–835A	1
9	AZ	MESA, CITY OF	04013C2635F	02/21/1996	96–09–407A	2

Region	State	Community name	Panel number	Effective date	Case No.	Determination
9	AZ	ORO VALLEY, TOWNSHIP OF	0401090015E	04/18/1996	96–09–383A	1
9	AZ	PARADISE VALLEY, TOWN OF	04013C1690E	06/07/1996	96–09–728A	1
9	AZ	PEORIA, CITY OF	04013C1630F	02/08/1996	96–09–140A	1
9	AZ	PHOENIX, CITY OF	04013C0000	01/16/1996	96–09–277A	1
9	AZ	PHOENIX, CITY OF	04013C0000	02/22/1996	96–09–423A	1
9	AZ	PHOENIX, CITY OF	04013C0000	04/05/1996	96–09–503A	1
9	AZ	PHOENIX, CITY OF	04013C0000	04/15/1996	96–09–587A	1
9	AZ	PHOENIX, CITY OF	04013C0000	06/19/1996	96–09–806A	1
9	AZ	PHOENIX, CITY OF	04013C1195D	02/26/1996	95–09–1037P	5
9	AZ	PHOENIX, CITY OF	04013C1215H	05/08/1996	96–09–523P	5
9	AZ	PHOENIX, CITY OF	04013C1245F	06/26/1996	96–09–810P	6
9	AZ	PHOENIX, CITY OF	04013C1615H	05/31/1996	96–09–777P	6
9	AZ	PHOENIX, CITY OF	04013C1655H	01/19/1996	96–09–215A	8
9	AZ	PHOENIX, CITY OF	04013C1655H	04/02/1996	96–09–419A	2
9	AZ	PHOENIX, CITY OF	04013C1655H	03/08/1996	96–09–466A	2
9	AZ	PHOENIX, CITY OF	04013C1655H	03/20/1996	96–09–467A	2
9	AZ	PHOENIX, CITY OF	04013C1655H	03/18/1996	96–09–468A	2
9	AZ	PHOENIX, CITY OF	04013C1655H	03/18/1996	96–09–469A	2
9	AZ	PHOENIX, CITY OF	04013C1655H	05/01/1996	96–09–505A	2
9	AZ	PHOENIX, CITY OF	04013C1655H	04/05/1996	96–09–537A	2
9	AZ	PHOENIX, CITY OF	04013C1655H	04/11/1996	96–09–538A	2
9	AZ	PHOENIX, CITY OF	04013C1655H	04/15/1996	96–09–539A	2
9	AZ	PHOENIX, CITY OF	04013C1655H	04/05/1996	96–09–568A	2
9	AZ	PHOENIX, CITY OF	04013C1655H	04/24/1996	96–09–634A	2
9	AZ	PHOENIX, CITY OF	04013C1655H	06/17/1996	96–09–780A	2
9	AZ	PHOENIX, CITY OF	04013C1655H	06/07/1996	96–09–781A	2
9	AZ	PHOENIX, CITY OF	04013C1655H	06/07/1996	96–09–783A	2
9	AZ	PHOENIX, CITY OF	04013C1655H	06/28/1996	96–09–853A	2
9	AZ	PHOENIX, CITY OF	04013C1655H	06/28/1996	96–09–876A	2
9	AZ	PHOENIX, CITY OF	04013C1655H	06/28/1996	96–09–877A	2
9	AZ	PHOENIX, CITY OF	04013C1660F	02/08/1996	96–09–286A	1
9	AZ	PHOENIX, CITY OF	04013C1660F	06/07/1996	96–09–782A	1
9	AZ	PHOENIX, CITY OF	04013C1690E	06/28/1996	96–09–868A	2
9	AZ	PHOENIX, CITY OF	04013C2105D	02/08/1996	96–09–172A	2
9	AZ	PHOENIX, CITY OF	04013C2110D	03/20/1996	96–09–504A	2
9	AZ	PIMA COUNTY*	0400731620D	06/19/1996	96–09–813A	2
9	AZ	PIMA COUNTY*	0400731635C	01/25/1996	96–09–267A	2
9	AZ	PIMA COUNTY*	0400731635C	06/04/1996	96–09–703A	8
9	AZ	PIMA COUNTY*	0400731640D	03/28/1996	96–09–489A	1
9	AZ	PIMA COUNTY*	0400731670E	01/22/1996	96–09–113A	2
9	AZ	PIMA COUNTY*	0400731690D	04/18/1996	96–09–464A	1
9	AZ	SANTA CRUZ COUNTY*	0400900145A	01/26/1996	96–09–254A	2
9	AZ	SCOTTSDALE, CITY OF	04013C0820E	04/24/1996	95–09–978P	8
9	AZ	SCOTTSDALE, CITY OF	04013C1235E	06/03/1996	96–09–712A	2
9	AZ	SCOTTSDALE, CITY OF	04013C1245F	06/26/1996	96–09–810P	6
9	AZ	SCOTTSDALE, CITY OF	04013C1695F	01/31/1996	96–09–330A	1
9	AZ	SCOTTSDALE, CITY OF	04013C1695F	03/08/1996	96–09–457A	1
9	AZ	SCOTTSDALE, CITY OF	04013C1705E	06/07/1996	96–09–772A	2
9	AZ	SCOTTSDALE, CITY OF	04013C2155E	03/07/1996	96–09–402A	2
9	AZ	SIERRA VISTA, CITY OF	0400170005C	04/03/1996	96–09–506A	2
9	AZ	TUCSON, CITY OF	0400760015F	02/22/1996	96–09–166P	5
9	AZ	TUCSON, CITY OF	0400760015F	04/29/1996	96–09–369P	6
9	AZ	TUCSON, CITY OF	0400760020G	02/22/1996	96–09–166P	5
9	AZ	TUCSON, CITY OF	0400760020G	04/29/1996	96–09–369P	6
9	AZ	TUCSON, CITY OF	0400760020G	05/17/1996	96–09–519A	2
9	AZ	TUCSON, CITY OF	0400760020G	05/29/1996	96–09–689A	1
9	AZ	TUCSON, CITY OF	0400760025H	01/10/1996	96–09–203A	2
9	AZ	TUCSON, CITY OF	0400760025H	01/26/1996	96–09–303A	2
9	AZ	TUCSON, CITY OF	0400760025H	03/08/1996	96–09–413A	2
9	AZ	TUCSON, CITY OF	0400760025H	04/18/1996	96–09–524A	2
9	AZ	TUCSON, CITY OF	0400760025H	05/01/1996	96–09–533A	2
9	AZ	TUCSON, CITY OF	0400760025H	05/10/1996	96–09–621A	2
9	AZ	TUCSON, CITY OF	0400760030H	05/01/1996	96–09–578A	2
9	AZ	TUCSON, CITY OF	0400760045G	01/10/1996	96–09–157A	2
9	AZ	TUCSON, CITY OF	0400760045G	05/29/1996	96–09–680A	2
9	AZ	TUCSON, CITY OF	0400760045G	06/07/1996	96–09–752A	1
9	AZ	TUCSON, CITY OF	0400760050F	03/01/1996	96–09–252A	2
9	AZ	TUCSON, CITY OF	0400760050F	05/10/1996	96–09–637A	2
9	AZ	YAVAPAI COUNTY*	0400930865B	04/15/1996	96–09–204A	1
9	CA	ALAMEDA COUNTY*	0600010090C	04/03/1996	96–09–450A	2
9	CA	ANAHEIM, CITY OF	06059C0008E	04/30/1996	96–09–601P	6
9	CA	ANAHEIM, CITY OF	06059C0008E	06/28/1996	96–09–848A	2
9	CA	ANAHEIM, CITY OF	06059C0009E	04/30/1996	96–09–601P	6

Region	State	Community name	Panel number	Effective date	Case No.	Determination
9	CA	ANAHEIM, CITY OF	06059C0014E	04/30/1996	96–09–601P	6
9	CA	ANAHEIM, CITY OF	06059C0015E	04/30/1996	96–09–601P	6
9	CA	ANAHEIM, CITY OF	06059C0021E	04/30/1996	96–09–601P	6
9	CA	APPLE VALLEY, CITY OF	06071C5840F	04/18/1996	96–09–475A	1
9	CA	ATASCADERO, CITY OF	0607000006B	04/18/1996	96–09–307A	2
9	CA	BUTTE COUNTY*	0600170250B	01/19/1996	96–09–071A	2
9	CA	CARLSBAD, CITY OF	0602850004D	04/29/1996	96–09–510P	6
9	CA	CARLSBAD, CITY OF	0602850015D	03/07/1996	96–09–417A	1
9	CA	CLAYTON, CITY OF	0600270001B	02/05/1996	95–09–964P	5
9	CA	CLAYTON, CITY OF	0600270001B	04/24/1996	96–09–515A	1
9	CA	CLAYTON, CITY OF	0600270001B	06/28/1996	96–09–792A	1
9	CA	CLOVIS, CITY OF	0600440005D	04/09/1996	96–09–461P	5
9	CA	COLTON, CITY OF	06071C8683F	06/17/1996	96–09–739A	1
9	CA	CONCORD, CITY OF	0650220006B	06/17/1996	96–09–629A	2
9	CA	CONCORD, CITY OF	0650220008B	06/17/1996	96–09–501A	2
9	CA	CONCORD, CITY OF	0650220009B	06/28/1996	96–09–842A	2
9	CA	CONCORD, CITY OF	0650220009B	06/28/1996	96–09–844A	2
9	CA	CONCORD, CITY OF	0650220010B	02/05/1996	95–09–964P	5
9	CA	CONCORD, CITY OF	0650220010B	02/13/1996	96–09–349A	2
9	CA	CONTRA COSTA COUNTY*	0600250275B	03/13/1996	96–09–431A	2
9	CA	CONTRA COSTA COUNTY*	0600250280B	01/10/1996	96–09–117A	2
9	CA	CONTRA COSTA COUNTY*	0600250355B	03/05/1996	96–09–283A	1
9	CA	CONTRA COSTA COUNTY*	0600250370B	03/01/1996	96–09–314A	2
9	CA	CONTRA COSTA COUNTY*	0600250475B	05/08/1996	96–09–684A	1
9	CA	CORTE MADERA, TOWN OF	0650230001B	05/17/1996	96–09–559A	2
9	CA	COSTA MESA, CITY OF	06059C0037E	04/30/1996	96–09–601P	6
9	CA	COSTA MESA, CITY OF	06059C0038E	02/08/1996	96–09–382A	2
9	CA	COSTA MESA, CITY OF	06059C0038E	03/20/1996	96–09–495A	2
9	CA	COSTA MESA, CITY OF	06059C0038E	03/20/1996	96–09–496A	2
9	CA	COSTA MESA, CITY OF	06059C0038E	04/30/1996	96–09–601P	6
9	CA	COSTA MESA, CITY OF	06059C0046E	04/30/1996	96–09–601P	6
9	CA	COTATI, CITY OF	0603770001C	01/19/1996	96–09–229A	1
9	CA	COTATI, CITY OF	0603770001C	01/11/1996	96–09–260P	5
9	CA	COTATI, CITY OF	0603770001C	02/26/1996	96–09–304A	1
9	CA	COTATI, CITY OF	0603770001C	01/29/1996	96–09–308A	1
9	CA	COTATI, CITY OF	0603770001C	04/23/1996	96–09–545A	8
9	CA	COTATI, CITY OF	0603770001C	04/18/1996	96–09–552A	1
9	CA	COTATI, CITY OF	0603770001C	04/18/1996	96–09–552A	1
9	CA	COTATI, CITY OF	0603770001C	05/20/1996	96–09–636A	8
9	CA	COTATI, CITY OF	0603770001C	05/06/1996	96–09–664A	1
9	CA	DANVILLE, TOWN OF	0607070001A	01/10/1996	96–09–218A	2
9	CA	DANVILLE, TOWN OF	0607070001A	05/10/1996	96–09–628A	2
9	CA	DAVIS, CITY OF	604240000	04/18/1996	96–09–527A	1
9	CA	DAVIS, CITY OF	604240000	05/07/1996	96–09–560A	1
9	CA	DAVIS, CITY OF	604240000	06/20/1996	96–09–774A	1
9	CA	DINUBA, CITY OF	0604030001B	01/10/1996	96–09–006A	1
9	CA	DINUBA, CITY OF	0604030001B	05/01/1996	96–09–590A	1
9	CA	DINUBA, CITY OF	0604030001B	06/17/1996	96–09–594A	1
9	CA	DINUBA, CITY OF	0604030001B	06/17/1996	96–09–595A	1
9	CA	EL PASO DE ROBLES, CITY OF	603080000	01/11/1996	94–09–812P	5
9	CA	FOSTER CITY, CITY OF	0603180010C	03/07/1996	96–09–416A	2
9	CA	FOUNTAIN VALLEY, CITY OF	06059C0028E	04/30/1996	96–09–601P	6
9	CA	FOUNTAIN VALLEY, CITY OF	06059C0036E	04/30/1996	96–09–601P	6
9	CA	FOUNTAIN VALLEY, CITY OF	06059C0037E	05/08/1996	96–09–543A	2
9	CA	FOUNTAIN VALLEY, CITY OF	06059C0037E	04/30/1996	96–09–601P	6
9	CA	FRESNO COUNTY*	0650290595B	04/18/1996	96–09–544A	2
9	CA	FRESNO COUNTY*	0650290880B	04/09/1996	96–09–461P	5
9	CA	FRESNO COUNTY*	0650290885B	04/09/1996	96–09–461P	5
9	CA	FRESNO COUNTY*	0650290920B	01/19/1996	95–09–1016A	2
9	CA	FRESNO, CITY OF	600480000	04/11/1996	96–09–391A	1
9	CA	GARDEN GROVE, CITY OF	06059C0020E	04/30/1996	96–09–601P	6
9	CA	GARDEN GROVE, CITY OF	06059C0021E	04/30/1996	96–09–601P	6
9	CA	GARDEN GROVE, CITY OF	06059C0028E	04/30/1996	96–09–601P	6
9	CA	GARDEN GROVE, CITY OF	06059C0028E	06/03/1996	96–09–649A	2
9	CA	GARDEN GROVE, CITY OF	06059C0029E	04/30/1996	96–09–601P	6
9	CA	GONZALES, CITY OF	0601980001B	01/10/1996	96–09–148P	6
9	CA	HEMET, CITY OF	0602530005C	01/22/1996	96–09–198A	1
9	CA	HEMET, CITY OF	0602530005C	01/31/1996	96–09–301A	1
9	CA	HEMET, CITY OF	0602530005C	03/20/1996	96–09–403A	1
9	CA	HEMET, CITY OF	0602530005C	03/20/1996	96–09–465A	1
9	CA	HEMET, CITY OF	0602530005C	04/15/1996	96–09–570A	1
9	CA	HEMET, CITY OF	0602530005C	05/01/1996	96–09–656A	1
9	CA	HEMET, CITY OF	0602530005C	05/21/1996	96–09–692A	1

Region	State	Community name	Panel number	Effective date	Case No.	Determination
9	CA	HEMET, CITY OF	0602530005C	05/31/1996	96–09–713A	1
9	CA	HEMET, CITY OF	0602530005C	06/06/1996	96–09–747A	1
9	CA	HEMET, CITY OF	0602530005C	06/28/1996	96–09–836P	6
9	CA	HEMET, CITY OF	0602530005C	06/28/1996	96–09–851A	1
9	CA	HEMET, CITY OF	0602530005C	06/28/1996	96–09–860A	1
9	CA	HUNTINGTON BEACH, CITY OF	06059C0027E	02/28/1996	96–09–344P	6
9	CA	HUNTINGTON BEACH, CITY OF	06059C0027E	04/30/1996	96–09–601P	6
9	CA	HUNTINGTON BEACH, CITY OF	06059C0036E	04/30/1996	96–09–601P	6
9	CA	HUNTINGTON BEACH, CITY OF	06059C0037E	04/30/1996	96–09–601P	6
9	CA	HUNTINGTON BEACH, CITY OF	06059C0045E	04/30/1996	96–09–601P	6
9	CA	HUNTINGTON BEACH, CITY OF	06059C0046E	04/30/1996	96–09–601P	6
9	CA	HUNTINGTON BEACH, CITY OF	06059C0054E	04/30/1996	96–09–601P	6
9	CA	KERN COUNTY	0600750205B	06/28/1996	96–09–729A	1
9	CA	KERN COUNTY	0600750745B	02/07/1996	95–09–1002A	1
9	CA	KERN COUNTY	0600751275B	03/07/1996	96–09–409A	1
9	CA	LAKE COUNTY*	0600900655A	06/17/1996	96–09–798A	2
9	CA	LARKSPUR, CITY OF	0650400001B	01/19/1996	96–09–197A	2
9	CA	LARKSPUR, CITY OF	0650400001B	05/22/1996	96–09–572A	1
9	CA	LARKSPUR, CITY OF	0650400001B	06/28/1996	96–09–856A	2
9	CA	LEMOORE,CITY OF	0600890001A	06/12/1996	96–09–453A	2
9	CA	LINCOLN, CITY OF	0602410004B	06/28/1996	96–09–607A	1
9	CA	LOS ALTOS HILLS, TOWN OF	0603420001B	03/08/1996	96–09–434A	1
9	CA	LOS ANGELES COUNTY*	0650430215B	05/23/1996	96–09–567A	2
9	CA	LOS ANGELES COUNTY*	0650430365B	01/19/1996	95–09–1034A	1
9	CA	LOS ANGELES COUNTY*	0650430460B	01/10/1996	96–09–233A	2
9	CA	LOS ANGELES, CITY OF	0601370064C	01/29/1996	96–09–248A	2
9	CA	LOS ANGELES, CITY OF	0601370064C	04/05/1996	96–09–438A	1
9	CA	LOS ANGELES, CITY OF	0601370072D	04/11/1996	96–09–476A	8
9	CA	LOS ANGELES, CITY OF	0601370072D	05/15/1996	96–09–681P	5
9	CA	LOS ANGELES, CITY OF	0601370079D	04/11/1996	96–09–476A	8
9	CA	MADERA COUNTY*	0601700640B	04/23/1996	96–09–211P	6
9	CA	MADERA COUNTY*	0601700725B	05/29/1996	96–09–701A	1
9	CA	MARIN COUNTY*	0601730075A	05/03/1996	96–09–406A	2
9	CA	MARIN COUNTY*	0601730266A	03/01/1996	96–09–253A	2
9	CA	MARIN COUNTY*	0601730444A	06/06/1996	96–09–766A	2
9	CA	MARIN COUNTY*	0601730444A	06/07/1996	96–09–789A	2
9	CA	MENDOCINO COUNTY*	0601830587C	01/22/1996	96–09–202A	2
9	CA	MENDOCINO COUNTY*	0601830713B	06/06/1996	96–09–732A	2
9	CA	MENDOCINO COUNTY*	0601830813B	03/01/1996	96–09–405A	2
9	CA	MENDOCINO COUNTY*	0601830914B	01/16/1996	96–09–097A	2
9	CA	MERCED COUNTY*	06047C0440E	06/12/1996	96–09–762A	1
9	CA	MERCED COUNTY*	06047C0445E	03/07/1996	96–09–327A	1
9	CA	MERCED COUNTY*	06047C0465E	01/10/1996	96–09–224A	1
9	CA	MERCED COUNTY*	06047C0465E	02/07/1996	96–09–362A	1
9	CA	MERCED COUNTY*	06047C0465E	02/21/1996	96–09–399A	1
9	CA	MERCED COUNTY*	06047C0465E	04/12/1996	96–09–596A	1
9	CA	MERCED COUNTY*	06047C0465E	06/19/1996	96–09–821A	1
9	CA	MERCED, CITY OF	06047C0430E	03/01/1996	96–09–397A	1
9	CA	MERCED, CITY OF	06047C0440E	01/10/1996	96–09–265A	1
9	CA	MERCED, CITY OF	06047C0440E	01/26/1996	96–09–284A	1
9	CA	MERCED, CITY OF	06047C0440E	06/19/1996	96–09–817A	1
9	CA	MILL VALLEY, CITY OF	0601770005B	04/02/1996	96–09–430A	2
9	CA	MODESTO, CITY OF	0603870015C	01/19/1996	96–09–135A	2
9	CA	MOORPARK, CITY OF	0607120005A	04/02/1996	96–09–325A	2
9	CA	NAPA COUNTY*	0602050275A	01/19/1996	96–09–012A	1
9	CA	NAPA, CITY OF	602070000	04/19/1996	96–09–562A	2
9	CA	NAPA, CITY OF	0602070005C	01/10/1996	96–09–231A	1
9	CA	NAPA, CITY OF	0602070005C	04/12/1996	96–09–550A	2
9	CA	NAPA, CITY OF	0602070010C	01/29/1996	96–09–300A	1
9	CA	NAPA, CITY OF	0602070010C	05/01/1996	96–09–531A	1
9	CA	NAPA, CITY OF	0602070010C	04/19/1996	96–09–561A	1
9	CA	NAPA, CITY OF	0602070010C	05/23/1996	96–09–714A	1
9	CA	NAPA, CITY OF	0602070010C	05/31/1996	96–09–717A	2
9	CA	NAPA, CITY OF	0602070010C	06/17/1996	96–09–820A	1
9	CA	NEVADA COUNTY*	0602100504C	06/19/1996	96–09–748A	2
9	CA	NEWPORT BEACH, CITY OF	06059C0046E	04/30/1996	96–09–601P	6
9	CA	NEWPORT BEACH, CITY OF	06059C0047E	04/23/1996	96–09–528A	2
9	CA	NEWPORT BEACH, CITY OF	06059C0054E	04/30/1996	96–09–601P	6
9	CA	NORCO, CITY OF	0602560003B	03/13/1996	96–09–411A	2
9	CA	OCEANSIDE, CITY OF	0602940003C	02/08/1996	96–09–339A	1
9	CA	OCEANSIDE, CITY OF	0602940003C	02/08/1996	96–09–370A	2
9	CA	OCEANSIDE, CITY OF	0602940003C	05/01/1996	96–09–611A	2
9	CA	OCEANSIDE, CITY OF	0602940003C	05/01/1996	96–09–650A	1

Region	State	Community name	Panel number	Effective date	Case No.	Determination
9	CA	OCEANSIDE, CITY OF	0602940003C	05/10/1996	96–09–676A	1
9	CA	OCEANSIDE, CITY OF	0602940003C	06/28/1996	96–09–846A	1
9	CA	OCEANSIDE, CITY OF	0602940003C	06/28/1996	96–09–861A	1
9	CA	OCEANSIDE, CITY OF	0602940009C	06/28/1996	96–09–715A	2
9	CA	OCEANSIDE, CITY OF	0602940011C	04/24/1996	96–09–486A	1
9	CA	ONTARIO, CITY OF	06071C8629F	06/21/1996	96–09–768P	6
9	CA	ORANGE COUNTY*	06059C0014E	04/30/1996	96–09–601P	6
9	CA	ORANGE COUNTY*	06059C0021E	04/30/1996	96–09–601P	6
9	CA	ORANGE COUNTY*	06059C0027E	04/30/1996	96–09–601P	6
9	CA	ORANGE COUNTY*	06059C0028E	04/30/1996	96–09–601P	6
9	CA	ORANGE COUNTY*	06059C0029E	04/30/1996	96–09–601P	6
9	CA	ORANGE COUNTY*	06059C0035E	04/30/1996	96–09–601P	6
9	CA	ORANGE COUNTY*	06059C0036E	04/30/1996	96–09–601P	6
9	CA	ORANGE COUNTY*	06059C0037E	04/30/1996	96–09–601P	6
9	CA	ORANGE COUNTY*	06059C0045E	04/30/1996	96–09–601P	6
9	CA	ORANGE COUNTY*	06059C0046E	04/30/1996	96–09–601P	6
9	CA	ORANGE COUNTY*	06059C0050F	05/02/1996	96–09–502A	2
9	CA	ORANGE COUNTY*	06059C0054E	04/30/1996	96–09–601P	6
9	CA	ORANGE COUNTY*	06059C0057E	01/19/1996	96–09–010A	2
9	CA	ORANGE COUNTY*	06059C0057E	04/02/1996	96–09–440A	2
9	CA	ORANGE, CITY OF	06059C0014E	04/30/1996	96–09–601P	6
9	CA	ORANGE, CITY OF	06059C0015E	04/30/1996	96–09–601P	6
9	CA	ORANGE, CITY OF	06059C0021E	02/21/1996	96–09–351A	2
9	CA	ORANGE, CITY OF	06059C0021E	03/07/1996	96–09–427P	5
9	CA	ORANGE, CITY OF	06059C0021E	04/30/1996	96–09–601P	6
9	CA	ORANGE, CITY OF	06059C0021E	05/21/1996	96–09–679A	2
9	CA	ORANGE, CITY OF	06059C0022F	03/07/1996	96–09–427P	5
9	CA	ORANGE, CITY OF	06059C0022F	05/17/1996	96–09–473A	2
9	CA	ORANGE, CITY OF	06059C0029E	04/30/1996	96–09–601P	6
9	CA	ORINDA, CITY OF	0607220020A	03/20/1996	96–09–472A	2
9	CA	PERRIS, CITY OF	0602580010D	01/29/1996	96–09–311A	1
9	CA	PERRIS, CITY OF	0602580010D	05/07/1996	96–09–442A	1
9	CA	PERRIS, CITY OF	0602580010D	04/18/1996	96–09–536A	1
9	CA	PERRIS, CITY OF	0602580010D	05/31/1996	96–09–719A	1
9	CA	PETALUMA, CITY OF	0603790001C	06/24/1996	96–09–257A	1
9	CA	PETALUMA, CITY OF	0603790002C	04/23/1996	96–09–518A	1
9	CA	PITTSBURG,CITY OF	0600330003D	05/07/1996	96–09–115P	5
9	CA	PLEASANTON, CITY OF	600120000	02/12/1996	96–09–289A	1
9	CA	PLEASANTON, CITY OF	600120000	05/01/1996	96–09–563A	1
9	CA	PLEASANTON, CITY OF	0600120001D	04/24/1996	96–09–580A	2
9	CA	PLEASANTON, CITY OF	0600120001D	05/10/1996	96–09–631A	2
9	CA	PLEASANTON, CITY OF	0600120001D	06/07/1996	96–09–787A	2
9	CA	PLEASANTON, CITY OF	0600120003D	05/10/1996	96–09–396A	2
9	CA	PLEASANTON, CITY OF	0600120003D	03/26/1996	96–09–487A	2
9	CA	PLEASANTON, CITY OF	0600120003D	05/10/1996	96–09–647A	2
9	CA	PLEASANTON, CITY OF	0600120003D	06/10/1996	96–09–807A	2
9	CA	PLUMAS COUNTY*	060244 B	01/10/1996	96–09–209A	2
9	CA	PLUMAS COUNTY*	060244 B	02/07/1996	96–09–323A	2
9	CA	PLUMAS COUNTY*	060244 B	03/05/1996	96–09–335A	2
9	CA	PORTERVILLE, CITY OF	0604070010D	03/26/1996	96–09–480A	1
9	CA	PORTERVILLE, CITY OF	0604070010D	06/28/1996	96–09–849A	1
9	CA	POWAY, CITY OF	0607020011B	05/15/1996	96–09–313P	5
9	CA	RANCHO CUCAMONGA, CITY OF	0606710005A	01/10/1996	96–09–219A	2
9	CA	RANCHO CUCAMONGA, CITY OF	06071C7890F	06/21/1996	96–09–733P	6
9	CA	RANCHO CUCAMONGA, CITY OF	06071C7890F	06/21/1996	96–09–768P	6
9	CA	RANCHO CUCAMONGA, CITY OF	06071C8629F	06/21/1996	96–09–733P	6
9	CA	RANCHO CUCAMONGA, CITY OF	06071C8629F	06/21/1996	96–09–768P	6
9	CA	RANCHO CUCAMONGA, CITY OF	06071C8630F	06/21/1996	96–09–733P	6
9	CA	RANCHO CUCAMONGA, CITY OF	06071C8630F	06/21/1996	96–09–768P	6
9	CA	REDDING, CITY OF	0603600005C	02/08/1996	96–09–328A	2
9	CA	REDDING, CITY OF	0603600015C	04/04/1996	96–09–428P	6
9	CA	REDDING, CITY OF	0603600020C	05/01/1996	96–09–516A	1
9	CA	REDDING, CITY OF	0603600025C	01/29/1996	96–09–302A	2
9	CA	REDDING, CITY OF	0603600025C	04/23/1996	96–09–566A	2
9	CA	REDDING, CITY OF	0603600025C	06/03/1996	96–09–735A	2
9	CA	REDLANDS, CITY OF	0602790005D	01/10/1996	95–09–802A	1
9	CA	RICHMOND, CITY OF	0600350020B	05/30/1996	96–09–651A	1
9	CA	RIVERSIDE COUNTY*	0602451585B	01/26/1996	96–09–315A	2
9	CA	RIVERSIDE COUNTY*	0602451585B	01/25/1996	96–09–329A	1
9	CA	RIVERSIDE COUNTY*	0602451625B	02/16/1996	96–09–181P	6
9	CA	RIVERSIDE COUNTY*	0602452260C	02/16/1996	96–09–181P	6
9	CA	RIVERSIDE COUNTY*	0602453355C	01/25/1996	96–09–079P	6
9	CA	RIVERSIDE COUNTY*	0602453360B	01/25/1996	96–09–079P	6

Region	State	Community name	Panel number	Effective date	Case No.	Determination
9	CA	RIVERSIDE, CITY OF	0602600020A	01/19/1996	96–09–208A	2
9	CA	RIVERSIDE, CITY OF	0602600020A	06/11/1996	96–09–576P	6
9	CA	ROSEVILLE, CITY OF	0602430017D	04/23/1996	96–09–512A	2
9	CA	SACRAMENTO COUNTY*	0602620070C	01/10/1996	96–09–146A	1
9	CA	SACRAMENTO COUNTY*	0602620070C	03/20/1996	96–09–491A	1
9	CA	SACRAMENTO COUNTY*	0602620090D	03/20/1996	96–09–477A	2
9	CA	SACRAMENTO COUNTY*	0602620090D	06/17/1996	96–09–640A	2
9	CA	SACRAMENTO COUNTY*	0602620095D	02/21/1996	96–09–376A	2
9	CA	SACRAMENTO COUNTY*	0602620095D	02/21/1996	96–09–377A	2
9	CA	SACRAMENTO COUNTY*	0602620095D	04/15/1996	96–09–540A	2
9	CA	SACRAMENTO COUNTY*	0602620095D	05/23/1996	96–09–677A	8
9	CA	SACRAMENTO COUNTY*	0602620105C	05/23/1996	96–09–507A	2
9	CA	SACRAMENTO COUNTY*	0602620185E	01/10/1996	96–09–258A	2
9	CA	SACRAMENTO COUNTY*	0602620185E	06/07/1996	96–09–773A	2
9	CA	SACRAMENTO COUNTY*	0602620190D	03/01/1996	96–09–336A	1
9	CA	SACRAMENTO COUNTY*	0602620205D	04/15/1996	96–09–368A	2
9	CA	SACRAMENTO COUNTY*	0602620205D	05/02/1996	96–09–613A	1
9	CA	SACRAMENTO COUNTY*	0602620310E	04/25/1996	96–09–478P	5
9	CA	SACRAMENTO COUNTY*	0602620310E	05/10/1996	96–09–615A	2
9	CA	SACRAMENTO COUNTY*	0602620315C	06/21/1996	96–09–718A	1
9	CA	SACRAMENTO COUNTY*	0602620320D	04/24/1996	96–09–571A	2
9	CA	SACRAMENTO COUNTY*	0602620320D	06/17/1996	96–09–740A	1
9	CA	SACRAMENTO COUNTY*	0602620330C	04/25/1996	96–09–478P	5
9	CA	SACRAMENTO COUNTY*	0602620340C	02/21/1996	96–09–259A	1
9	CA	SACRAMENTO COUNTY*	0602620340C	03/08/1996	96–09–482A	1
9	CA	SACRAMENTO COUNTY*	0602620340C	06/17/1996	96–09–740A	1
9	CA	SACRAMENTO COUNTY*	0602620375C	05/10/1996	96–09–614A	2
9	CA	SACRAMENTO COUNTY*	0602620375C	05/10/1996	96–09–659A	2
9	CA	SACRAMENTO COUNTY*	0602620400C	02/01/1996	96–09–273A	1
9	CA	SACRAMENTO COUNTY*	0602620450C	05/09/1996	96–09–395A	1
9	CA	SACRAMENTO COUNTY*	0602620475D	05/10/1996	96–09–660A	2
9	CA	SACRAMENTO, CITY OF	602660000	02/07/1996	96–09–147A	2
9	CA	SACRAMENTO, CITY OF	0602660015E	06/06/1996	96–09–622A	2
9	CA	SAN BERNARDINO COUNTY*	0602707150C	03/21/1996	96–09–038A	2
9	CA	SAN BERNARDINO COUNTY*	0602707155B	02/13/1996	96–09–144A	2
9	CA	SAN BERNARDINO COUNTY*	0602707155B	02/13/1996	96–09–178A	2
9	CA	SAN BUENAVENTURA, CITY OF	0604190010C	06/28/1996	96–09–843A	2
9	CA	SAN CARLOS, CITY OF	0603270001C	06/07/1996	96–09–741A	2
9	CA	SAN DIEGO COUNTY*	0602841061C	03/01/1996	96–09–408A	1
9	CA	SAN DIEGO COUNTY*	0602841136C	06/26/1996	96–09–222P	5
9	CA	SAN DIEGO COUNTY*	0602841137C	06/26/1996	96–09–222P	5
9	CA	SAN DIEGO, CITY OF	0602950114C	04/03/1996	96–09–508A	1
9	CA	SAN DIEGO, CITY OF	0602950163C	05/17/1996	96–09–657A	1
9	CA	SAN JOAQUIN COUNTY*	0602990435B	01/18/1996	95–09–983A	8
9	CA	SAN JOAQUIN COUNTY*	0602990435B	03/01/1996	96–09–390A	2
9	CA	SAN JOAQUIN COUNTY*	0602990455B	03/01/1996	96–09–390A	2
9	CA	SAN JOAQUIN COUNTY*	0602990610A	04/15/1996	96–09–526A	1
9	CA	SAN JOSE, CITY OF	0603490008F	06/24/1996	96–09–670A	1
9	CA	SAN JOSE, CITY OF	0603490009F	01/10/1996	96–09–263A	2
9	CA	SAN JOSE, CITY OF	0603490009F	01/10/1996	96–09–264A	2
9	CA	SAN JOSE, CITY OF	0603490009F	03/26/1996	96–09–474A	2
9	CA	SAN JOSE, CITY OF	0603490009F	06/20/1996	96–09–767P	5
9	CA	SAN JOSE, CITY OF	0603490014E	01/31/1996	96–09–305A	2
9	CA	SAN JOSE, CITY OF	0603490014E	06/20/1996	96–09–767P	5
9	CA	SAN JOSE, CITY OF	0603490019E	02/22/1996	96–09–367A	2
9	CA	SAN JOSE, CITY OF	0603490020E	01/10/1996	96–09–226A	2
9	CA	SAN LEANDRO, CITY OF	0600130003B	03/07/1996	96–09–348A	2
9	CA	SAN LUIS OBISPO, CITY OF	0603100005C	01/19/1996	96–09–155A	1
9	CA	SAN RAFAEL, CITY OF	0650580015B	05/23/1996	96–09–655A	2
9	CA	SAN RAFAEL, CITY OF	0650580015B	06/07/1996	96–09–725A	2
9	CA	SANTA ANA, CITY OF	06059C0021E	04/30/1996	96–09–601P	6
9	CA	SANTA ANA, CITY OF	06059C0028E	05/21/1996	96–09–373A	1
9	CA	SANTA ANA, CITY OF	06059C0028E	04/30/1996	96–09–601P	6
9	CA	SANTA ANA, CITY OF	06059C0029E	06/06/1996	96–09–445A	2
9	CA	SANTA ANA, CITY OF	06059C0029E	04/30/1996	96–09–601P	6
9	CA	SANTA ANA, CITY OF	06059C0029E	06/21/1996	96–09–830A	2
9	CA	SANTA ANA, CITY OF	06059C0037E	04/30/1996	96–09–601P	6
9	CA	SANTA ANA, CITY OF	06059C0038E	04/30/1996	96–09–601P	6
9	CA	SANTA ANA, CITY OF	06059C0038E	05/28/1996	96–09–624A	1
9	CA	SANTA ANA, CITY OF	06059C0038E	06/19/1996	96–09–700A	2
9	CA	SANTA BARBARA COUNTY*	0603310765D	05/03/1996	96–09–583P	5
9	CA	SANTA CLARA, CITY OF	0603500001C	03/28/1996	96–09–509A	2
9	CA	SANTA CRUZ COUNTY*	0603530095B	04/18/1996	96–09–318A	2

Region	State	Community name	Panel number	Effective date	Case No.	Determination
9	CA	SANTA CRUZ COUNTY*	0603530360B	05/02/1996	96–09–618A	2
9	CA	SANTA CRUZ COUNTY*	0603530360B	05/10/1996	96–09–665A	2
9	CA	SANTA CRUZ COUNTY*	0603530385B	06/03/1996	96–09–653A	2
9	CA	SANTA CRUZ, CITY OF	0603550004C	04/23/1996	96–09–372A	8
9	CA	SHASTA COUNTY*	0603580515C	05/28/1996	96–09–646A	8
9	CA	SHASTA COUNTY*	0603580695C	03/08/1996	96–09–435A	2
9	CA	SHASTA COUNTY*	0603580715B	06/19/1996	96–09–579A	2
9	CA	SHASTA COUNTY*	0603580895C	01/10/1996	95–09–1006A	2
9	CA	SIMI VALLEY, CITY OF	0604210002A	02/21/1996	96–09–180A	2
9	CA	SIMI VALLEY, CITY OF	0604210002A	01/23/1996	96–09–236P	6
9	CA	SIMI VALLEY, CITY OF	0604210002A	02/20/1996	96–09–294A	1
9	CA	SIMI VALLEY, CITY OF	0604210002A	06/28/1996	96–09–786A	1
9	CA	SIMI VALLEY, CITY OF	0604210004A	01/23/1996	96–09–236P	6
9	CA	SIMI VALLEY, CITY OF	0604210004A	04/02/1996	96–09–447A	2
9	CA	SIMI VALLEY, CITY OF	0604210006A	02/20/1996	96–09–255A	2
9	CA	SIMI VALLEY, CITY OF	0604210006A	01/10/1996	96–09–269A	2
9	CA	SIMI VALLEY, CITY OF	0604210006A	03/18/1996	96–09–340A	2
9	CA	SIMI VALLEY, CITY OF	0604210008A	01/10/1996	95–09–1008A	2
9	CA	SIMI VALLEY, CITY OF	0604210009A	02/06/1996	96–09–338A	2
9	CA	SIMI VALLEY, CITY OF	0604210009A	03/18/1996	96–09–441A	2
9	CA	SOLANO COUNTY*	0606310406B	01/10/1996	96–09–196A	2
9	CA	SOLANO COUNTY*	0606310406B	01/22/1996	96–09–201A	2
9	CA	SOLANO COUNTY*	0606310406B	01/19/1996	96–09–221A	8
9	CA	SOLANO COUNTY*	0606310406B	01/16/1996	96–09–245A	2
9	CA	SOLANO COUNTY*	0606310406B	01/10/1996	96–09–261A	2
9	CA	SOLANO COUNTY*	0606310406B	02/08/1996	96–09–341A	2
9	CA	SOLANO COUNTY*	0606310406B	02/08/1996	96–09–371A	2
9	CA	SOLANO COUNTY*	0606310406B	06/07/1996	96–09–675A	2
9	CA	SONOMA COUNTY*	0603750635B	01/19/1996	95–09–1025A	2
9	CA	SONOMA COUNTY*	0603750660B	04/18/1996	96–09–448A	2
9	CA	SONOMA COUNTY*	0603750680B	05/09/1996	96–09–299A	2
9	CA	SONOMA COUNTY*	0603750855B	06/06/1996	96–09–764A	2
9	CA	SONOMA COUNTY*	0603750870B	04/23/1996	96–09–518A	1
9	CA	SUNNYVALE, CITY OF	0603520001C	01/31/1996	96–09–306A	2
9	CA	TEMECULA, CITY OF	0607420010A	01/25/1996	96–09–079P	6
9	CA	THOUSAND OAKS, CITY OF	0604220015B	01/26/1996	96–09–188A	1
9	CA	THOUSAND OAKS, CITY OF	0604220015B	06/03/1996	96–09–750A	2
9	CA	THOUSAND OAKS, CITY OF	0604220015B	06/07/1996	96–09–751A	2
9	CA	TRINITY COUNTY*	06105C0600B	01/10/1996	96–09–076A	2
9	CA	TULARE COUNTY*	0650660325B	02/21/1996	96–09–334A	2
9	CA	TULARE COUNTY*	0650660325B	06/17/1996	96–09–769A	2
9	CA	TULARE COUNTY*	0650660345B	06/12/1996	96–09–707A	2
9	CA	TULARE COUNTY*	0650660465B	05/17/1996	96–09–241A	1
9	CA	UKIAH, CITY OF	0601860001E	01/17/1996	96–09–177A	8
9	CA	UKIAH, CITY OF	0601860001E	05/31/1996	96–09–716A	2
9	CA	VACAVILLE, CITY OF	0603730004B	05/29/1996	96–09–585A	1
9	CA	VACAVILLE, CITY OF	0603730005B	05/29/1996	96–09–585A	1
9	CA	VACAVILLE, CITY OF	0603730007B	03/08/1996	96–09–485A	1
9	CA	VALLEJO, CITY OF	0603740005C	06/12/1996	96–09–759A	1
9	CA	VILLA PARK, CITY OF	06059C0022F	04/05/1996	96–09–564A	2
9	CA	VISALIA, CITY OF	0604090005C	01/18/1996	96–09–194A	1
9	CA	VISALIA, CITY OF	0604090005C	02/22/1996	96–09–421A	1
9	CA	VISALIA, CITY OF	0604090005C	06/06/1996	96–09–745A	1
9	CA	VISALIA, CITY OF	0604090010C	01/10/1996	96–09–205A	1
9	CA	VISALIA, CITY OF	0604090010C	02/08/1996	96–09–321A	1
9	CA	VISALIA, CITY OF	0604090010C	03/08/1996	96–09–432A	2
9	CA	VISALIA, CITY OF	0604090010C	03/20/1996	96–09–500P	6
9	CA	VISTA, CITY OF	0602970004C	05/08/1996	96–09–630A	2
9	CA	WESTMINSTER, CITY OF	06059C0027E	02/28/1996	96–09–344P	6
9	CA	WESTMINSTER, CITY OF	06059C0027E	04/30/1996	96–09–601P	6
9	CA	WESTMINSTER, CITY OF	06059C0028E	04/30/1996	96–09–601P	6
9	CA	WESTMINSTER, CITY OF	06059C0036E	04/30/1996	96–09–601P	6
9	CA	WESTMINSTER, CITY OF	06059C0037E	04/30/1996	96–09–601P	6
9	CA	YORBA LINDA, CITY OF	06059C0009E	04/30/1996	96–09–601P	6
9	CA	YORBA LINDA, CITY OF	06059C0010E	04/30/1996	96–09–601P	6
9	CA	YUCAIPA, CITY OF	0602708740C	02/02/1996	96–09–249A	1
9	HI	HAWAII COUNTY*	1551660466C	04/10/1996	96–09–378P	5
9	HI	HAWAII COUNTY*	1551660478C	04/10/1996	96–09–378P	5
9	HI	HAWAII COUNTY*	1551660860C	06/28/1996	96–09–459A	2
9	HI	HAWAII COUNTY*	1551660870C	02/26/1996	96–09–270A	2
9	HI	HAWAII COUNTY*	1551660870C	06/28/1996	96–09–459A	2
9	HI	HAWAII COUNTY*	1551660880C	06/03/1996	96–09–654P	6
9	HI	HAWAII COUNTY*	1551660890C	06/05/1996	96–09–525P	6

Region	State	Community name	Panel number	Effective date	Case No.	Determination
9	HI	HONOLULU COUNTY*	1500010100C	06/17/1996	96–09–731A	1
9	HI	MAUI COUNTY*	1500030151B	06/06/1996	96–09–191P	5
9	HI	MAUI COUNTY*	1500030153B	06/06/1996	96–09–191P	5
9	HI	MAUI COUNTY*	1500030153B	06/05/1996	96–09–691A	1
9	HI	MAUI COUNTY*	1500030265C	03/08/1996	96–09–425A	1
9	NV	CLARK COUNTY*	32003C2180D	03/21/1996	96–09–517A	2
9	NV	CLARK COUNTY*	32003C2552D	01/19/1996	95–09–909A	1
9	NV	CLARK COUNTY*	32003C2552D	01/19/1996	96–09–279A	1
9	NV	CLARK COUNTY*	32003C2552D	05/06/1996	96–09–586A	1
9	NV	CLARK COUNTY*	32003C2553D	05/07/1996	96–09–184P	5
9	NV	CLARK COUNTY*	32003C2567D	06/27/1996	96–09–316P	6
9	NV	CLARK COUNTY*	32003C2590D	02/20/1996	96–09–174A	1
9	NV	HENDERSON, CITY OF	32003C2580D	04/19/1996	96–09–557A	2
9	NV	HENDERSON, CITY OF	32003C2590D	03/08/1996	95–09–750A	1
9	NV	HENDERSON, CITY OF	32003C2590D	01/10/1996	96–09–240A	1
9	NV	HENDERSON, CITY OF	32003C2590D	02/07/1996	96–09–246P	6
9	NV	HENDERSON, CITY OF	32003C2590D	05/13/1996	96–09–429P	5
9	NV	HENDERSON, CITY OF	32003C2590D	04/11/1996	96–09–542A	1
9	NV	HENDERSON, CITY OF	32003C2590D	05/08/1996	96–09–573A	1
9	NV	HENDERSON, CITY OF	32003C2590D	05/28/1996	96–09–722P	5
9	NV	HENDERSON, CITY OF	32003C2595D	05/28/1996	96–09–722P	5
9	NV	HENDERSON, CITY OF	32003C2605D	06/07/1996	96–09–237P	5
9	NV	HENDERSON, CITY OF	32003C2615D	01/10/1996	96–09–242A	2
9	NV	HENDERSON, CITY OF	32003C2615D	02/26/1996	96–09–426A	1
9	NV	HENDERSON, CITY OF	32003C2615D	05/10/1996	96–09–582A	1
9	NV	HENDERSON, CITY OF	32003C2615D	05/10/1996	96–09–606A	1
9	NV	HENDERSON, CITY OF	32003C2615D	06/07/1996	96–09–610A	1
9	NV	LAS VEGAS, CITY OF	32003C2145D	04/19/1996	96–09–555A	2
9	NV	LAS VEGAS, CITY OF	32003C2187D	04/11/1996	96–09–541A	2
9	NV	NORTH LAS VEGAS, CITY OF	32003C2160D	06/07/1996	96–09–744A	1
9	NV	RENO, CITY OF	32031C2793E	02/22/1996	96–09–332P	5
9	NV	RENO, CITY OF	32031C2794E	02/22/1996	96–09–332P	5
9	NV	RENO, CITY OF	32031C2800E	02/22/1996	96–09–332P	5
9	NV	RENO, CITY OF	32031C3176E	04/23/1996	96–09–565A	1
9	NV	WASHOE COUNTY*	32031C2793E	02/22/1996	96–09–332P	5
9	NV	WASHOE COUNTY*	32031C2794E	02/22/1996	96–09–332P	5
9	NV	WASHOE COUNTY*	32031C3170E	02/07/1996	96–09–322A	2
9	NV	WASHOE COUNTY*	32031C3325E	04/30/1996	96–09–046P	6
10	AK	ANCHORAGE, MUNICIPALITY OF	0200050240C	03/08/1996	96–10–043A	2
10	AK	FAIRBANKS–NORTH STAR BOROUGH	0250090203G	04/24/1996	96–10–089A	2
10	AK	SITKA, CITY AND BOROUGH OF	0200060962B	03/20/1996	96–10–045A	2
10	AK	VALDEZ, CITY OF	0200940066C	05/23/1996	96–10–097A	8
10	ID	ADA COUNTY*	1600010155C	04/12/1996	96–10–051A	2
10	ID	AMMON, CITY OF	1600280001B	05/08/1996	96–10–103A	2
10	ID	BINGHAM COUNTY*	1600180430B	03/08/1996	96–10–031A	1
10	ID	BINGHAM COUNTY*	1600180430B	06/12/1996	96–10–128A	1
10	ID	BINGHAM COUNTY*	1600180430B	02/08/1996	96–R10–115	1
10	ID	BINGHAM COUNTY*	1600180430B	02/08/1996	96–R10–116	1
10	ID	BINGHAM COUNTY*	1600180430B	02/08/1996	96–R10–117	1
10	ID	BINGHAM COUNTY*	1600180430B	02/08/1996	96–R10–118	1
10	ID	BINGHAM COUNTY*	1600180430B	02/08/1996	96–R10–119	1
10	ID	BINGHAM COUNTY*	1600180430B	02/08/1996	96–R10–120	1
10	ID	BINGHAM COUNTY*	1600180430B	02/08/1996	96–R10–121	1
10	ID	BLAINE COUNTY*	1651670000	01/22/1996	96–R10–005	2
10	ID	BOISE COUNTY*	16015C0000	02/02/1996	96–R10–107	2
10	ID	BOISE COUNTY*	16015C0237B	03/13/1996	96–10–009A	2
10	ID	BOISE, CITY OF	1600020000	05/29/1996	96–10–110A	2
10	ID	BONNER COUNTY*	1602060000	02/05/1996	96–R10–036	2
10	ID	BONNER COUNTY*	1602060075B	05/08/1996	96–10–033A	2
10	ID	BONNER COUNTY*	1602060300C	05/07/1996	96–10–042A	2
10	ID	BONNER COUNTY*	1602060325B	01/18/1996	96–R10–090	2
10	ID	CANYON COUNTY*	1602080229C	06/28/1996	96–10–180A	1
10	ID	COEUR D'ALENE, CITY OF	1600780005C	06/07/1996	96–10–138A	2
10	ID	EAGLE, CITY OF	1600030001C	02/06/1996	96–R10–112	2
10	ID	MADISON COUNTY*	16065C0020D	06/21/1996	96–10–106P	6
10	ID	MADISON COUNTY*	16065C0025D	06/21/1996	96–10–106P	6
10	ID	MADISON COUNTY*	16065C0100D	06/21/1996	96–10–106P	6
10	ID	MADISON COUNTY*	16065C0125D	06/21/1996	96–10–106P	6
10	ID	MERIDIAN, CITY OF	1601800000	01/18/1996	96–10–007A	1
10	ID	MERIDIAN, CITY OF	1601800001A	06/07/1996	96–10–142A	2
10	ID	MIDDLETON, CITY OF	1600370001E	05/17/1996	96–10–120A	1
10	ID	MOUNTAIN HOME, CITY OF	1600580005C	05/21/1996	96–10–020A	1
10	ID	VALLEY COUNTY*	1602200625A	05/23/1996	96–10–125A	2

Region	State	Community name	Panel number	Effective date	Case No.	Determination
10	ID	WEISER,CITY OF	1601240005B	01/24/1996	96–R10–093	2
10	OR	ALBANY, CITY OF	4101370003E	02/06/1996	96–R10–113	2
10	OR	BEAVERTON,CITY OF	4102400003C	05/15/1996	96–10–111A	8
10	OR	BEAVERTON,CITY OF	4102400006C	06/19/1996	96–10–175A	1
10	OR	BEAVERTON,CITY OF	4102400006C	01/16/1996	96–R10–063	2
10	OR	BEND, CITY OF	41017C0000	01/18/1996	96–R10–086	2
10	OR	BENTON COUNTY*	4100080050C	06/07/1996	96–10–147A	2
10	OR	CENTRAL POINT, CITY OF	4100920001C	04/11/1996	96–10–049A	8
10	OR	CLACKAMAS COUNTY*	4155880206A	03/25/1996	96–10–046A	2
10	OR	CLACKAMAS COUNTY*	4155880280A	05/17/1996	96–10–068A	1
10	OR	COLUMBIA COUNTY*	41009C0450C	04/15/1996	96–10–069A	2
10	OR	COOS COUNTY*	4100420000	01/22/1996	96–R10–101	2
10	OR	CORVALLIS, CITY OF	4100090004E	04/05/1996	96–10–038A	1
10	OR	EUGENE, CITY OF	4101220000	03/13/1996	96–10–035A	2
10	OR	EUGENE, CITY OF	4101220000	06/07/1996	96–10–066A	2
10	OR	EUGENE, CITY OF	4101220001B	04/11/1996	96–10–023A	2
10	OR	EUGENE, CITY OF	4101220002B	01/16/1996	95–R10–152	2
10	OR	EUGENE, CITY OF	4101220002B	05/17/1996	96–10–061A	1
10	OR	EUGENE, CITY OF	4101220005C	01/17/1996	96–R10–083	2
10	OR	HILLSBORO, CITY OF	4102430001B	01/09/1996	96–R10–075	2
10	OR	HILLSBORO, CITY OF	4102430002B	06/17/1996	96–10–172A	2
10	OR	KEIZER, CITY OF	4102880005B	06/26/1996	96–10–053A	1
10	OR	KEIZER, CITY OF	4102880005B	05/01/1996	96–10–054A	2
10	OR	KEIZER, CITY OF	4102880005B	05/01/1996	96–10–074A	2
10	OR	KEIZER, CITY OF	4102880005B	05/10/1996	96–10–108A	2
10	OR	KEIZER, CITY OF	4102880005B	05/23/1996	96–10–118A	8
10	OR	KEIZER, CITY OF	4102880005B	06/12/1996	96–10–146A	2
10	OR	KEIZER, CITY OF	4102880005B	06/28/1996	96–10–186A	2
10	OR	KLAMATH COUNTY*	4101091050B	06/07/1996	96–10–136A	2
10	OR	KLAMATH COUNTY*	4101091350B	05/09/1996	96–10–075A	2
10	OR	LAKE OSWEGO, CITY OF	4100180000	01/16/1996	96–R10–062	2
10	OR	LAKE OSWEGO, CITY OF	4100180002C	03/26/1996	96–10–032A	2
10	OR	LAKE OSWEGO, CITY OF	4100180003C	01/18/1996	96–R10–091	2
10	OR	LANE COUNTY*	4155910085C	06/07/1996	96–10–137A	2
10	OR	LANE COUNTY*	4155910100C	03/07/1996	96–10–029A	2
10	OR	LANE COUNTY*	4155910100C	04/24/1996	96–10–058A	2
10	OR	LANE COUNTY*	4155910355C	01/08/1996	96–R10–073	2
10	OR	LANE COUNTY*	4155910610C	03/26/1996	96–10–057A	2
10	OR	LANE COUNTY*	4155910645E	03/01/1996	96–10–021A	1
10	OR	LANE COUNTY*	4155910645E	06/07/1996	96–10–063A	2
10	OR	MEDFORD, CITY OF	4100960008C	06/07/1996	96–10–134A	2
10	OR	NORTH BEND, CITY OF	4100480001B	06/19/1996	96–10–129A	2
10	OR	PHOENIX, CITY OF	4100970001B	06/28/1996	96–10–182A	2
10	OR	ROSEBURG, CITY OF	4100670005D	01/18/1996	96–R10–089	2
10	OR	SALEM, CITY OF	4101670000	01/18/1996	96–R10–087	1
10	OR	SCAPPOOSE, CITY OF	41009C0444C	03/08/1996	96–10–028A	2
10	OR	SPRINGFIELD, CITY OF	4155920000	02/12/1996	96–R10–094	2
10	OR	STANFIELD, CITY OF	4102130001C	04/15/1996	96–10–072A	2
10	OR	TUALATIN, CITY OF	4102770002D	01/23/1996	96–R10–092	1
10	OR	UMATILLA COUNTY*	4102040400B	02/06/1996	96–R10–110	2
10	OR	WASHINGTON COUNTY*	4102380513B	01/30/1996	96–R10–106	2
10	OR	WEST LINN, CITY OF	4100240001B	06/06/1996	96–10–141A	2
10	OR	WEST LINN, CITY OF	4100240001B	06/06/1996	96–10–143A	2
10	OR	YAMHILL COUNTY*	4102490125C	06/17/1996	96–10–148A	2
10	OR	YAMHILL COUNTY*	4102490130C	05/07/1996	96–10–100A	2
10	OR	YAMHILL COUNTY*	4102490130C	05/17/1996	96–10–113A	2
10	OR	YAMHILL COUNTY*	4102490130C	02/07/1996	96–R10–114	2
10	WA	ABERDEEN, CITY OF	5300580003B	04/11/1996	96–10–048A	8
10	WA	BAINBRIDGE ISLAND, CITY OF	5303070001A	04/24/1996	96–10–083A	2
10	WA	BAINBRIDGE ISLAND, CITY OF	5303070001A	05/17/1996	96–10–114A	2
10	WA	BENTON COUNTY*	5302370435B	06/12/1996	96–10–160A	2
10	WA	BURIEN, CITY OF	53033C0953F	05/17/1996	96–10–090A	2
10	WA	CHELAN COUNTY*	5300150625C	05/13/1996	96–10–011P	5
10	WA	CLARK COUNTY*	5300240405B	06/28/1996	96–10–185A	1
10	WA	FERRY COUNTY*	5300410050B	06/17/1996	96–10–024A	2
10	WA	GRAYS HARBOR COUNTY*	5300570325B	04/23/1996	96–10–084A	2
10	WA	HOQUIAM, CITY OF	5300610005B	04/11/1996	96–10–062A	8
10	WA	ISSAQUAH, CITY OF	53033C0687F	01/25/1996	96–10–008P	6
10	WA	ISSAQUAH, CITY OF	53033C0691F	01/25/1996	96–10–008P	6
10	WA	KENT, CITY OF	53033C0969F	06/06/1996	96–10–107A	1
10	WA	KENT, CITY OF	53033C0988F	06/06/1996	96–10–107A	1
10	WA	KENT, CITY OF	53033C1232F	06/06/1996	96–10–107A	1
10	WA	KING COUNTY*	53033C0000	01/11/1996	96–R10–079	2

Region	State	Community name	Panel number	Effective date	Case No.	Determination
10	WA	KING COUNTY*	53033C0377F	05/31/1996	96–10–135A	2
10	WA	KING COUNTY*	53033C0680F	05/17/1996	96–10–088A	2
10	WA	KING COUNTY*	53033C0680F	01/18/1996	96–R10–088	2
10	WA	KING COUNTY*	53033C0718G	05/23/1996	96–10–070A	2
10	WA	KING COUNTY*	53033C0744F	04/12/1996	96–10–047A	1
10	WA	KING COUNTY*	53033C0744F	06/14/1996	96–10–158A	2
10	WA	KING COUNTY*	53033C0950F	06/12/1996	96–10–126A	2
10	WA	KING COUNTY*	53033C1057F	06/20/1996	96–10–163A	1
10	WA	KITSAP COUNTY*	5300920305B	05/01/1996	96–10–096A	2
10	WA	LEWIS COUNTY*	5301020242B	03/21/1996	96–10–059P	6
10	WA	MASON COUNTY*	5301150050C	06/07/1996	96–10–073A	2
10	WA	MONROE, CITY OF	5301690001B	06/17/1996	96–10–159A	1
10	WA	MOUNT VERNON, CITY OF	5301580001B	04/15/1996	96–10–067A	2
10	WA	OCEAN SHORES, CITY OF	5300650002B	05/17/1996	96–10–116A	2
10	WA	PIERCE COUNTY*	5301380290C	05/17/1996	96–10–071A	2
10	WA	PIERCE COUNTY*	5301380314C	05/21/1996	96–10–102A	1
10	WA	POULSBO, CITY OF	5302410005C	01/30/1996	96–R10–032	2
10	WA	POULSBO, CITY OF	5302410005C	01/30/1996	96–R10–103	2
10	WA	PUYALLUP, CITY OF	5301440005B	06/06/1996	96–10–104A	1
10	WA	RAYMOND, CITY OF	5301290005B	06/07/1996	96–10–149A	2
10	WA	REDMOND, CITY OF	53033C0370F	02/08/1996	96–10–017A	2
10	WA	SAN JUAN COUNTY*	5301490003B	04/24/1996	96–10–087A	2
10	WA	SEATTLE, CITY OF	53033C0331F	03/20/1996	96–10–040A	2
10	WA	SKAGIT COUNTY*	5301510045C	06/19/1996	96–10–179A	2
10	WA	SKAGIT COUNTY*	5301510250C	04/24/1996	96–10–085A	2
10	WA	SKAGIT COUNTY*	5301510250C	06/12/1996	96–10–156A	2
10	WA	SKAGIT COUNTY*	5301510250C	01/22/1996	96–R10–097	2
10	WA	SKAGIT COUNTY*	5301510280C	05/06/1996	96–10–101A	2
10	WA	SKAMANIA COUNTY*	5301600350B	01/17/1996	96–R10–081	2
10	WA	SKAMANIA COUNTY*	5301600400B	01/23/1996	96–R10–056	2
10	WA	SNOHOMISH COUNTY*	5355340180B	03/20/1996	96–10–041A	2
10	WA	SNOHOMISH COUNTY*	5355340195B	06/28/1996	96–10–095A	2
10	WA	SNOHOMISH COUNTY*	5355340335B	05/01/1996	96–10–064A	2
10	WA	SNOHOMISH COUNTY*	5355340467C	05/10/1996	96–10–022P	6
10	WA	SPOKANE COUNTY*	5301740000	01/09/1996	96–R10–055	2
10	WA	SPOKANE COUNTY*	5301740000	01/18/1996	96–R10–084	2
10	WA	SPOKANE COUNTY*	5301740277B	06/28/1996	96–10–184A	2
10	WA	SPOKANE COUNTY*	5301740277B	01/17/1996	96–R10–082	1
10	WA	SPOKANE COUNTY*	5301740294C	06/07/1996	96–10–161A	2
10	WA	SULTAN, TOWN OF	5301730001B	06/18/1996	96–R10–123	2
10	WA	THURSTON COUNTY*	5301880075C	01/22/1996	96–R10–102	2
10	WA	THURSTON COUNTY*	5301880445C	04/24/1996	96–10–013P	5
10	WA	TUMWATER, CITY OF	5301920001C	06/07/1996	96–10–144A	2
10	WA	WENATCHEE, CITY OF	5300200005C	05/13/1996	96–10–011P	5
10	WA	YAKIMA COUNTY*	5302171029B	01/10/1996	96–10–010A	2
10	WA	YAKIMA COUNTY*	5302171033B	01/10/1996	96–10–010A	2

MAP REVISIONS

Region	State	Community	Panel number	Effective date
1	CONNECTICUT	COLCHESTER, TOWN OF	900950000	06/04/1996
1	CONNECTICUT	COLCHESTER, TOWN OF	0900950015D	06/04/1996
1	CONNECTICUT	FARMINGTON, TOWN OF	900290000	01/05/1996
1	CONNECTICUT	FARMINGTON, TOWN OF	0900290005C	01/05/1996
1	CONNECTICUT	FARMINGTON, TOWN OF	0900290010C	01/05/1996
1	MAINE	ARUNDEL, TOWN OF	2301920000	06/04/1996
1	MAINE	ARUNDEL, TOWN OF	2301920005C	06/04/1996
1	MAINE	ARUNDEL, TOWN OF	2301920010C	06/04/1996
1	MAINE	HOWLAND, TOWN OF	2303910000	05/20/1996
1	MAINE	HOWLAND, TOWN OF	2303910010B	05/20/1996
1	MAINE	HOWLAND, TOWN OF	2303910011B	05/20/1996
1	MAINE	HOWLAND, TOWN OF	2303910012B	05/20/1996
1	MAINE	HOWLAND, TOWN OF	2303910013B	05/20/1996
1	MAINE	HOWLAND, TOWN OF	2303910014B	05/20/1996
1	MAINE	HOWLAND, TOWN OF	2303910016B	05/20/1996
1	MAINE	MILO, TOWN OF	2301770000	05/20/1996
1	MAINE	MILO, TOWN OF	2301770005C	05/20/1996
1	MAINE	MILO, TOWN OF	2301770010C	05/20/1996
1	MAINE	NORRIDGEWOCK, TOWN OF	2301780000	05/06/1996
1	MAINE	NORRIDGEWOCK, TOWN OF	2301780002C	05/06/1996
1	MAINE	NORRIDGEWOCK, TOWN OF	2301780004C	05/06/1996

MAP REVISIONS—Continued

Region	State	Community	Panel number	Effective date
1	MAINE	NORRIDGEWOCK, TOWN OF	2301780008C	05/06/1996
1	MAINE	NORRIDGEWOCK, TOWN OF	2301780009C	05/06/1996
1	MAINE	NORRIDGEWOCK, TOWN OF	2301780010C	05/06/1996
1	MAINE	NORRIDGEWOCK, TOWN OF	2301780015C	05/06/1996
1	MAINE	NORRIDGEWOCK, TOWN OF	2301780016C	05/06/1996
1	MAINE	NORRIDGEWOCK, TOWN OF	2301780020C	05/06/1996
1	MAINE	PITTSFIELD, TOWN OF	2301270000	01/19/1996
1	MAINE	PITTSFIELD, TOWN OF	2301270005C	01/19/1996
1	MAINE	PITTSFIELD, TOWN OF	2301270010C	01/19/1996
1	MAINE	PITTSFIELD, TOWN OF	2301270015C	01/19/1996
1	MAINE	POLAND, TOWN OF	2300090000	05/20/1996
1	MAINE	POLAND, TOWN OF	2300090005D	05/20/1996
1	MAINE	POLAND, TOWN OF	2300090006D	05/20/1996
1	MAINE	POLAND, TOWN OF	2300090007D	05/20/1996
1	MAINE	POLAND, TOWN OF	2300090008D	05/20/1996
1	MAINE	POLAND, TOWN OF	2300090009D	05/20/1996
1	MAINE	POLAND, TOWN OF	2300090015D	05/20/1996
1	MAINE	POLAND, TOWN OF	2300090016D	05/20/1996
1	MAINE	POLAND, TOWN OF	2300090017D	05/20/1996
1	MAINE	POLAND, TOWN OF	2300090018D	05/20/1996
1	MAINE	STARKS, TOWN OF	2303720000	05/20/1996
1	MAINE	STARKS, TOWN OF	2303720005B	05/20/1996
1	MAINE	STARKS, TOWN OF	2303720015B	05/20/1996
1	MAINE	STARKS, TOWN OF	2303720016B	05/20/1996
1	MAINE	STARKS, TOWN OF	2303720018B	05/20/1996
1	MASSACHUSETTS	HOLBROOK, TOWN OF	2552120005C	02/02/1996
1	MASSACHUSETTS	NEW ASHFORD, TOWN OF	250032 A	06/01/1996
1	MASSACHUSETTS	NEW ASHFORD, TOWN OF	2500329999	06/01/1996
1	MASSACHUSETTS	NORTH READING, TOWN OF	2502090000	03/05/1996
1	MASSACHUSETTS	NORTH READING, TOWN OF	2502090004C	03/05/1996
1	MASSACHUSETTS	WASHINGTON, TOWN OF	250044 B	06/01/1996
1	MASSACHUSETTS	WASHINGTON, TOWN OF	2500449999	06/01/1996
1	NEW HAMPSHIRE	BRIDGEWATER, TOWN OF	3300460000	06/04/1996
1	NEW HAMPSHIRE	BRIDGEWATER, TOWN OF	3300460005C	06/04/1996
1	NEW HAMPSHIRE	BRIDGEWATER, TOWN OF	3300460010C	06/04/1996
1	RHODE ISLAND	BARRINGTON, TOWN OF	44001C0000	03/05/1996
1	RHODE ISLAND	BARRINGTON, TOWN OF	44001C0001F	03/05/1996
1	RHODE ISLAND	BARRINGTON, TOWN OF	44001C0002F	03/05/1996
1	RHODE ISLAND	BARRINGTON, TOWN OF	44001C0003F	03/05/1996
1	RHODE ISLAND	BARRINGTON, TOWN OF	44001C0005F	03/05/1996
1	RHODE ISLAND	BARRINGTON, TOWN OF	44001C0006F	03/05/1996
1	RHODE ISLAND	BARRINGTON, TOWN OF	44001C0007F	03/05/1996
1	RHODE ISLAND	BARRINGTON, TOWN OF	44001C0010F	03/05/1996
1	RHODE ISLAND	BRISTOL, TOWN OF	44001C0000	03/05/1996
1	RHODE ISLAND	BRISTOL, TOWN OF	44001C0010F	03/05/1996
1	RHODE ISLAND	BRISTOL, TOWN OF	44001C0011F	03/05/1996
1	RHODE ISLAND	BRISTOL, TOWN OF	44001C0012F	03/05/1996
1	RHODE ISLAND	BRISTOL, TOWN OF	44001C0013F	03/05/1996
1	RHODE ISLAND	BRISTOL, TOWN OF	44001C0014F	03/05/1996
1	RHODE ISLAND	BRISTOL, TOWN OF	44001C0015F	03/05/1996
1	RHODE ISLAND	BRISTOL, TOWN OF	44001C0016F	03/05/1996
1	RHODE ISLAND	BRISTOL, TOWN OF	44001C0017F	03/05/1996
1	RHODE ISLAND	WARREN, TOWN OF	44001C0000	03/05/1996
1	RHODE ISLAND	WARREN, TOWN OF	44001C0003F	03/05/1996
1	RHODE ISLAND	WARREN, TOWN OF	44001C0004F	03/05/1996
1	RHODE ISLAND	WARREN, TOWN OF	44001C0007F	03/05/1996
1	RHODE ISLAND	WARREN, TOWN OF	44001C0008F	03/05/1996
1	RHODE ISLAND	WARREN, TOWN OF	44001C0009F	03/05/1996
1	RHODE ISLAND	WARREN, TOWN OF	44001C0010F	03/05/1996
1	RHODE ISLAND	WARREN, TOWN OF	44001C0011F	03/05/1996
1	RHODE ISLAND	WARREN, TOWN OF	44001C0012F	03/05/1996
1	VERMONT	MARSHFIELD, TOWN OF	5003230000	03/05/1996
1	VERMONT	MARSHFIELD, TOWN OF	5003230004C	03/05/1996
2	NEW JERSEY	MOORESTOWN, TOWNSHIP OF	3401050000	01/19/1996
2	NEW JERSEY	MOORESTOWN, TOWNSHIP OF	3401050005C	01/19/1996
2	NEW JERSEY	MOORESTOWN, TOWNSHIP OF	3401050006B	01/19/1996
2	NEW JERSEY	MOORESTOWN, TOWNSHIP OF	3401050010B	01/19/1996
2	NEW JERSEY	NEWARK, CITY OF	3401890000	01/19/1996
2	NEW JERSEY	NEWARK, CITY OF	3401890007C	01/19/1996
2	NEW JERSEY	NEWARK, CITY OF	3401890009C	01/19/1996
2	NEW JERSEY	NEWARK, CITY OF	3401890010C	01/19/1996
2	NEW JERSEY	NEWARK, CITY OF	3401890011C	01/19/1996

MAP REVISIONS—Continued

Region	State	Community	Panel number	Effective date
2	NEW JERSEY	NORTH WILDWOOD, CITY OF	3453080001D	02/16/1996
2	NEW JERSEY	WILDWOOD CREST, BOROUGH OF	3453300001C	02/16/1996
2	NEW JERSEY	WILDWOOD, CITY OF	3453290001C	02/16/1996
2	NEW YORK	BOLIVAR, VILLAGE OF	3600260001C	01/19/1996
2	NEW YORK	CHESTER, TOWN OF	3608700000	06/04/1996
2	NEW YORK	CHESTER, TOWN OF	3608700005B	06/04/1996
2	NEW YORK	CHESTER, TOWN OF	3608700010B	06/04/1996
2	NEW YORK	CLARENCE, TOWN OF	3602320000	03/05/1996
2	NEW YORK	CLARENCE, TOWN OF	3602320005C	03/05/1996
2	NEW YORK	CLARENCE, TOWN OF	3602320010C	03/05/1996
2	NEW YORK	CLARENCE, TOWN OF	3602320011C	03/05/1996
2	NEW YORK	CLARENCE, TOWN OF	3602320012C	03/05/1996
2	NEW YORK	CLARENCE, TOWN OF	3602320013C	03/05/1996
2	NEW YORK	CLARENCE, TOWN OF	3602320014C	03/05/1996
2	NEW YORK	HURON, TOWN OF	3608920000	01/19/1996
2	NEW YORK	HURON, TOWN OF	3608920005C	01/19/1996
2	NEW YORK	HURON, TOWN OF	3608920010C	01/19/1996
2	NEW YORK	HURON, TOWN OF	3608920015C	01/19/1996
2	NEW YORK	HURON, TOWN OF	3608920020C	01/19/1996
2	NEW YORK	KIANTONE, TOWN OF	3610750000	02/02/1996
2	NEW YORK	KIANTONE, TOWN OF	3610750003C	02/02/1996
2	NEW YORK	KIANTONE, TOWN OF	3610750010C	02/02/1996
2	NEW YORK	POTSDAM, VILLAGE OF	3607090000	01/05/1996
2	NEW YORK	POTSDAM, VILLAGE OF	3607090001C	01/05/1996
2	NEW YORK	POTSDAM, VILLAGE OF	3607090003C	01/05/1996
3	DELAWARE	ARDEN, TOWN OF	10003C0000	04/17/1996
3	DELAWARE	ARDEN, TOWN OF	10003C0078F	04/17/1996
3	DELAWARE	ARDEN, TOWN OF	10003C0086F	04/17/1996
3	DELAWARE	ARDENCROFT, VILLAGE OF	10003C0000	04/17/1996
3	DELAWARE	ARDENCROFT, VILLAGE OF	10003C0086F	04/17/1996
3	DELAWARE	ARDENTOWN, VILLAGE OF	10003C0000	04/17/1996
3	DELAWARE	ARDENTOWN, VILLAGE OF	10003C0078F	04/17/1996
3	DELAWARE	ARDENTOWN, VILLAGE OF	10003C0086F	04/17/1996
3	DELAWARE	BELLEFONTE, TOWN OF	10003C0000	04/17/1996
3	DELAWARE	BELLEFONTE, TOWN OF	10003C0069F	04/17/1996
3	DELAWARE	BELLEFONTE, TOWN OF	10003C0088F	04/17/1996
3	DELAWARE	DELAWARE CITY, CITY OF	10003C0000	04/17/1996
3	DELAWARE	DELAWARE CITY, CITY OF	10003C0255F	04/17/1996
3	DELAWARE	DELAWARE CITY, CITY OF	10003C0265F	04/17/1996
3	DELAWARE	ELSMERE, TOWN OF	10003C0000	04/17/1996
3	DELAWARE	ELSMERE, TOWN OF	10003C0151F	04/17/1996
3	DELAWARE	ELSMERE, TOWN OF	10003C0152F	04/17/1996
3	DELAWARE	MIDDLETOWN, TOWN OF	10003C0000	04/17/1996
3	DELAWARE	MIDDLETOWN, TOWN OF	10003C0305F	04/17/1996
3	DELAWARE	MIDDLETOWN, TOWN OF	10003C0315F	04/17/1996
3	DELAWARE	NEW CASTLE COUNTY*	10003C0000	04/17/1996
3	DELAWARE	NEW CASTLE COUNTY*	10003C0035F	04/17/1996
3	DELAWARE	NEW CASTLE COUNTY*	10003C0040F	04/17/1996
3	DELAWARE	NEW CASTLE COUNTY*	10003C0045F	04/17/1996
3	DELAWARE	NEW CASTLE COUNTY*	10003C0055F	04/17/1996
3	DELAWARE	NEW CASTLE COUNTY*	10003C0059F	04/17/1996
3	DELAWARE	NEW CASTLE COUNTY*	10003C0060F	04/17/1996
3	DELAWARE	NEW CASTLE COUNTY*	10003C0065F	04/17/1996
3	DELAWARE	NEW CASTLE COUNTY*	10003C0066F	04/17/1996
3	DELAWARE	NEW CASTLE COUNTY*	10003C0067F	04/17/1996
3	DELAWARE	NEW CASTLE COUNTY*	10003C0068F	04/17/1996
3	DELAWARE	NEW CASTLE COUNTY*	10003C0069F	04/17/1996
3	DELAWARE	NEW CASTLE COUNTY*	10003C0078F	04/17/1996
3	DELAWARE	NEW CASTLE COUNTY*	10003C0079F	04/17/1996
3	DELAWARE	NEW CASTLE COUNTY*	10003C0086F	04/17/1996
3	DELAWARE	NEW CASTLE COUNTY*	10003C0087F	04/17/1996
3	DELAWARE	NEW CASTLE COUNTY*	10003C0088F	04/17/1996
3	DELAWARE	NEW CASTLE COUNTY*	10003C0095F	04/17/1996
3	DELAWARE	NEW CASTLE COUNTY*	10003C0110F	04/17/1996
3	DELAWARE	NEW CASTLE COUNTY*	10003C0120F	04/17/1996
3	DELAWARE	NEW CASTLE COUNTY*	10003C0130F	04/17/1996
3	DELAWARE	NEW CASTLE COUNTY*	10003C0135F	04/17/1996
3	DELAWARE	NEW CASTLE COUNTY*	10003C0140F	04/17/1996
3	DELAWARE	NEW CASTLE COUNTY*	10003C0145F	04/17/1996
3	DELAWARE	NEW CASTLE COUNTY*	10003C0151F	04/17/1996
3	DELAWARE	NEW CASTLE COUNTY*	10003C0152F	04/17/1996
3	DELAWARE	NEW CASTLE COUNTY*	10003C0155F	04/17/1996

MAP REVISIONS—Continued

Region	State	Community	Panel number	Effective date
3	DELAWARE	NEW CASTLE COUNTY*	10003C0160F	04/17/1996
3	DELAWARE	NEW CASTLE COUNTY*	10003C0165F	04/17/1996
3	DELAWARE	NEW CASTLE COUNTY*	10003C0170F	04/17/1996
3	DELAWARE	NEW CASTLE COUNTY*	10003C0180F	04/17/1996
3	DELAWARE	NEW CASTLE COUNTY*	10003C0225F	04/17/1996
3	DELAWARE	NEW CASTLE COUNTY*	10003C0230F	04/17/1996
3	DELAWARE	NEW CASTLE COUNTY*	10003C0235F	04/17/1996
3	DELAWARE	NEW CASTLE COUNTY*	10003C0240F	04/17/1996
3	DELAWARE	NEW CASTLE COUNTY*	10003C0245F	04/17/1996
3	DELAWARE	NEW CASTLE COUNTY*	10003C0255F	04/17/1996
3	DELAWARE	NEW CASTLE COUNTY*	10003C0265F	04/17/1996
3	DELAWARE	NEW CASTLE COUNTY*	10003C0275F	04/17/1996
3	DELAWARE	NEW CASTLE COUNTY*	10003C0300F	04/17/1996
3	DELAWARE	NEW CASTLE COUNTY*	10003C0305F	04/17/1996
3	DELAWARE	NEW CASTLE COUNTY*	10003C0310F	04/17/1996
3	DELAWARE	NEW CASTLE COUNTY*	10003C0315F	04/17/1996
3	DELAWARE	NEW CASTLE COUNTY*	10003C0320F	04/17/1996
3	DELAWARE	NEW CASTLE COUNTY*	10003C0330F	04/17/1996
3	DELAWARE	NEW CASTLE COUNTY*	10003C0340F	04/17/1996
3	DELAWARE	NEW CASTLE COUNTY*	10003C0350F	04/17/1996
3	DELAWARE	NEW CASTLE COUNTY*	10003C0400F	04/17/1996
3	DELAWARE	NEW CASTLE COUNTY*	10003C0405F	04/17/1996
3	DELAWARE	NEW CASTLE COUNTY*	10003C0410F	04/17/1996
3	DELAWARE	NEW CASTLE COUNTY*	10003C0425F	04/17/1996
3	DELAWARE	NEW CASTLE COUNTY*	10003C0430F	04/17/1996
3	DELAWARE	NEW CASTLE COUNTY*	10003C0450F	04/17/1996
3	DELAWARE	NEW CASTLE, CITY OF	10003C0000	04/17/1996
3	DELAWARE	NEW CASTLE, CITY OF	10003C0160F	04/17/1996
3	DELAWARE	NEW CASTLE, CITY OF	10003C0165F	04/17/1996
3	DELAWARE	NEW CASTLE, CITY OF	10003C0170F	04/17/1996
3	DELAWARE	NEWARK,CITY OF	10003C0000	04/17/1996
3	DELAWARE	NEWARK,CITY OF	10003C0110F	04/17/1996
3	DELAWARE	NEWARK,CITY OF	10003C0120F	04/17/1996
3	DELAWARE	NEWARK,CITY OF	10003C0130F	04/17/1996
3	DELAWARE	NEWARK,CITY OF	10003C0140F	04/17/1996
3	DELAWARE	NEWPORT, TOWN OF	10003C0000	04/17/1996
3	DELAWARE	NEWPORT, TOWN OF	10003C0151F	04/17/1996
3	DELAWARE	NEWPORT, TOWN OF	10003C0155F	04/17/1996
3	DELAWARE	ODESSA, TOWN OF	10003C0000	04/17/1996
3	DELAWARE	ODESSA, TOWN OF	10003C0310F	04/17/1996
3	DELAWARE	TOWNSEND, TOWN OF	10003C0000	04/17/1996
3	DELAWARE	TOWNSEND, TOWN OF	10003C0315F	04/17/1996
3	DELAWARE	WILMINGTON, CITY OF	10003C0000	04/17/1996
3	DELAWARE	WILMINGTON, CITY OF	10003C0065F	04/17/1996
3	DELAWARE	WILMINGTON, CITY OF	10003C0068F	04/17/1996
3	DELAWARE	WILMINGTON, CITY OF	10003C0069F	04/17/1996
3	DELAWARE	WILMINGTON, CITY OF	10003C0152F	04/17/1996
3	DELAWARE	WILMINGTON, CITY OF	10003C0160F	04/17/1996
3	DELAWARE	WILMINGTON, CITY OF	10003C0170F	04/17/1996
3	DELAWARE	WILMINGTON, CITY OF	10003C0180F	04/17/1996
3	PENNSYLVANIA	CHARLEROI, BOROUGH OF	4208500001C	01/19/1996
3	PENNSYLVANIA	FERGUSON, TOWNSHIP OF	4202600000	01/05/1996
3	PENNSYLVANIA	FERGUSON, TOWNSHIP OF	4202600005D	01/05/1996
3	PENNSYLVANIA	FERGUSON, TOWNSHIP OF	4202600010C	01/05/1996
3	PENNSYLVANIA	GERMAN, TOWNSHIP OF	4216270000	04/03/1996
3	PENNSYLVANIA	GERMAN, TOWNSHIP OF	4216270006C	04/03/1996
3	PENNSYLVANIA	GERMAN, TOWNSHIP OF	4216270007C	04/03/1996
3	PENNSYLVANIA	GERMAN, TOWNSHIP OF	4216270008C	04/03/1996
3	PENNSYLVANIA	HAMPDEN, TOWNSHIP OF	4203600010C	01/05/1996
3	PENNSYLVANIA	MOUNT HOLLY SPRINGS, BOROUGH OF	4203650001C	01/05/1996
3	PENNSYLVANIA	NEW EAGLE, BOROUGH OF	4208570001C	02/02/1996
3	PENNSYLVANIA	ROULETTE, TOWNSHIP OF	4219860000	01/19/1996
3	PENNSYLVANIA	ROULETTE, TOWNSHIP OF	4219860010C	01/19/1996
3	PENNSYLVANIA	SOUTH MIDDLETON, TOWNSHIP OF	4203710000	01/05/1996
3	PENNSYLVANIA	SOUTH MIDDLETON, TOWNSHIP OF	4203710010C	01/05/1996
3	PENNSYLVANIA	SOUTH MIDDLETON, TOWNSHIP OF	4203710020C	01/05/1996
3	PENNSYLVANIA	SOUTH MIDDLETON, TOWNSHIP OF	4203710030C	01/05/1996
3	PENNSYLVANIA	SPRINGETTSBURY, TOWNSHIP OF	4210310000	06/04/1996
3	PENNSYLVANIA	SPRINGETTSBURY, TOWNSHIP OF	4210310002B	06/04/1996
3	WEST VIRGINIA	BATH, TOWN OF	54065C0000	03/05/1996
3	WEST VIRGINIA	BATH, TOWN OF	54065C0028C	03/05/1996
3	WEST VIRGINIA	BATH, TOWN OF	54065C0036C	03/05/1996

MAP REVISIONS—Continued

Region	State	Community	Panel number	Effective date
3	WEST VIRGINIA	MORGAN COUNTY*	54065C0000	03/05/1996
3	WEST VIRGINIA	MORGAN COUNTY*	54065C0013C	03/05/1996
3	WEST VIRGINIA	MORGAN COUNTY*	54065C0025C	03/05/1996
3	WEST VIRGINIA	MORGAN COUNTY*	54065C0028C	03/05/1996
3	WEST VIRGINIA	MORGAN COUNTY*	54065C0036C	03/05/1996
3	WEST VIRGINIA	MORGAN COUNTY*	54065C0050C	03/05/1996
3	WEST VIRGINIA	MORGAN COUNTY*	54065C0075C	03/05/1996
3	WEST VIRGINIA	MORGAN COUNTY*	54065C0100C	03/05/1996
3	WEST VIRGINIA	PAW PAW, TOWN OF	54065C0000	03/05/1996
3	WEST VIRGINIA	PAW PAW, TOWN OF	54065C0013C	03/05/1996
4	FLORIDA	ALACHUA, CITY OF	1206640025A	02/02/1996
4	FLORIDA	BREVARD COUNTY*	12009C0000	01/05/1996
4	FLORIDA	BREVARD COUNTY*	12009C0190F	01/05/1996
4	FLORIDA	CAPE CANAVERAL PORT AUTHORITY	12009C0000	01/05/1996
4	FLORIDA	CAPE CANAVERAL, CITY OF	12009C0000	01/05/1996
4	FLORIDA	COCOA BEACH, CITY OF	12009C0000	01/05/1996
4	FLORIDA	COCOA, CITY OF	12009C0000	01/05/1996
4	FLORIDA	DEBARY, CITY OF	1206720001F	02/02/1996
4	FLORIDA	INDIALANTIC, TOWN OF	12009C0000	01/05/1996
4	FLORIDA	INDIAN HARBOR BEACH, CITY OF	12009C0000	01/05/1996
4	FLORIDA	MALABAR, TOWN OF	12009C0000	01/05/1996
4	FLORIDA	MELBOURNE BEACH, TOWN OF	12009C0000	01/05/1996
4	FLORIDA	MELBOURNE VILLAGE, TOWN OF	12009C0000	01/05/1996
4	FLORIDA	MELBOURNE, CITY OF	12009C0000	01/05/1996
4	FLORIDA	PALM BAY, CITY OF	12009C0000	01/05/1996
4	FLORIDA	PALM SHORES, TOWN OF	12009C0000	01/05/1996
4	FLORIDA	PINELLAS COUNTY*	1251390000	05/06/1996
4	FLORIDA	PINELLAS COUNTY*	1251390069D	05/06/1996
4	FLORIDA	PINELLAS COUNTY*	1251390088D	05/06/1996
4	FLORIDA	PINELLAS COUNTY*	1251390106D	05/06/1996
4	FLORIDA	PINELLAS COUNTY*	1251390107D	05/06/1996
4	FLORIDA	PINELLAS COUNTY*	1251390126D	05/06/1996
4	FLORIDA	PINELLAS COUNTY*	1251390127D	05/06/1996
4	FLORIDA	PINELLAS COUNTY*	1251390128D	05/06/1996
4	FLORIDA	ROCKLEDGE, CITY OF	12009C0000	01/05/1996
4	FLORIDA	SATELLITE BEACH, CITY OF	12009C0000	01/05/1996
4	FLORIDA	ST. CLOUD, CITY OF	1201910000	04/03/1996
4	FLORIDA	ST. CLOUD, CITY OF	1201910005D	04/03/1996
4	FLORIDA	ST. CLOUD, CITY OF	1201910010D	04/03/1996
4	FLORIDA	TITUSVILLE, CITY OF	12009C0000	01/05/1996
4	FLORIDA	TITUSVILLE, CITY OF	12009C0190F	01/05/1996
4	FLORIDA	VOLUSIA COUNTY*	1251550000	02/02/1996
4	FLORIDA	VOLUSIA COUNTY*	1251550465F	02/02/1996
4	FLORIDA	VOLUSIA COUNTY*	1251550475F	02/02/1996
4	FLORIDA	VOLUSIA COUNTY*	1251550580F	02/02/1996
4	FLORIDA	VOLUSIA COUNTY*	1251550585F	02/02/1996
4	FLORIDA	WEST MELBOURNE, CITY OF	12009C0000	01/05/1996
4	GEORGIA	BROOKS, TOWN OF	13113C0000	03/18/1996
4	GEORGIA	BROOKS, TOWN OF	13113C0125D	03/18/1996
4	GEORGIA	BUTTS COUNTY*	1305180000	03/18/1996
4	GEORGIA	BUTTS COUNTY*	1305180125A	03/18/1996
4	GEORGIA	BUTTS COUNTY*	1305180200A	03/18/1996
4	GEORGIA	COOK COUNTY*	1305010000	04/03/1996
4	GEORGIA	COOK COUNTY*	1305010025A	04/03/1996
4	GEORGIA	COOK COUNTY*	1305010050A	04/03/1996
4	GEORGIA	COOK COUNTY*	1305010075A	04/03/1996
4	GEORGIA	DOOLY COUNTY*	1305320000	06/04/1996
4	GEORGIA	DOOLY COUNTY*	1305320125A	06/04/1996
4	GEORGIA	DOOLY COUNTY*	1305320150A	06/04/1996
4	GEORGIA	DOOLY COUNTY*	1305320250A	06/04/1996
4	GEORGIA	DOOLY COUNTY*	1305320275A	06/04/1996
4	GEORGIA	FAYETTE COUNTY*	13113C0000	03/18/1996
4	GEORGIA	FAYETTE COUNTY*	13113C0020D	03/18/1996
4	GEORGIA	FAYETTE COUNTY*	13113C0035D	03/18/1996
4	GEORGIA	FAYETTE COUNTY*	13113C0040D	03/18/1996
4	GEORGIA	FAYETTE COUNTY*	13113C0045D	03/18/1996
4	GEORGIA	FAYETTE COUNTY*	13113C0060D	03/18/1996
4	GEORGIA	FAYETTE COUNTY*	13113C0080D	03/18/1996
4	GEORGIA	FAYETTE COUNTY*	13113C0085D	03/18/1996
4	GEORGIA	FAYETTE COUNTY*	13113C0090D	03/18/1996
4	GEORGIA	FAYETTE COUNTY*	13113C0095D	03/18/1996
4	GEORGIA	FAYETTE COUNTY*	13113C0125D	03/18/1996

MAP REVISIONS—Continued

Region	State	Community	Panel number	Effective date
4	GEORGIA	FAYETTEVILLE, CITY OF	13113C0000	03/18/1996
4	GEORGIA	FAYETTEVILLE, CITY OF	13113C0035D	03/18/1996
4	GEORGIA	FAYETTEVILLE, CITY OF	13113C0045D	03/18/1996
4	GEORGIA	FAYETTEVILLE, CITY OF	13113C0085D	03/18/1996
4	GEORGIA	GRADY COUNTY	130096 B	04/01/1996
4	GEORGIA	GRADY COUNTY	1300969999B	04/01/1996
4	GEORGIA	IDEAL, CITY OF	13193C0000	04/03/1996
4	GEORGIA	JASPER COUNTY*	1305190000	05/06/1996
4	GEORGIA	JASPER COUNTY*	1305190125A	05/06/1996
4	GEORGIA	JASPER COUNTY*	1305190200A	05/06/1996
4	GEORGIA	MACON COUNTY*	13193C0000	04/03/1996
4	GEORGIA	MACON COUNTY*	13193C0050D	04/03/1996
4	GEORGIA	MACON COUNTY*	13193C0075D	04/03/1996
4	GEORGIA	MACON COUNTY*	13193C0150D	04/03/1996
4	GEORGIA	MACON COUNTY*	13193C0175D	04/03/1996
4	GEORGIA	MACON COUNTY*	13193C0275D	04/03/1996
4	GEORGIA	MACON COUNTY*	13193C0375D	04/03/1996
4	GEORGIA	MARSHALLVILLE, TOWN OF	13193C0000	04/03/1996
4	GEORGIA	MONTEZUMA, CITY OF	13193C0000	04/03/1996
4	GEORGIA	MONTEZUMA, CITY OF	13193C0275D	04/03/1996
4	GEORGIA	OGLETHORPE, CITY OF	13193C0000	04/03/1996
4	GEORGIA	OGLETHORPE, CITY OF	13193C0275D	04/03/1996
4	GEORGIA	PEACHTREE CITY, CITY OF	13113C0000	03/18/1996
4	GEORGIA	PEACHTREE CITY, CITY OF	13113C0000	03/18/1996
4	GEORGIA	PEACHTREE CITY, CITY OF	13113C0035D	03/18/1996
4	GEORGIA	PEACHTREE CITY, CITY OF	13113C0060D	03/18/1996
4	GEORGIA	PEACHTREE CITY, CITY OF	13113C0080D	03/18/1996
4	GEORGIA	PEACHTREE CITY, CITY OF	13113C0090D	03/18/1996
4	GEORGIA	PIKE COUNTY	1305110000	03/18/1996
4	GEORGIA	PIKE COUNTY	1305110025A	03/18/1996
4	GEORGIA	PIKE COUNTY	1305110050A	03/18/1996
4	GEORGIA	PIKE COUNTY	1305110100A	03/18/1996
4	GEORGIA	PIKE COUNTY	1305110175A	03/18/1996
4	GEORGIA	SUMTER COUNTY*	1305210000	05/06/1996
4	GEORGIA	SUMTER COUNTY*	1305210100A	05/06/1996
4	GEORGIA	SUMTER COUNTY*	1305210175A	05/06/1996
4	GEORGIA	SUMTER COUNTY*	1305210200A	05/06/1996
4	GEORGIA	SUMTER COUNTY*	1305210225A	05/06/1996
4	GEORGIA	SUMTER COUNTY*	1305210350A	05/06/1996
4	GEORGIA	TELFAIR COUNTY*	1301660000	05/06/1996
4	GEORGIA	TELFAIR COUNTY*	1301660150A	05/06/1996
4	GEORGIA	TELFAIR COUNTY*	1301660225A	05/06/1996
4	GEORGIA	TELFAIR COUNTY*	1301660250A	05/06/1996
4	GEORGIA	TELFAIR COUNTY*	1301660275A	05/06/1996
4	GEORGIA	TELFAIR COUNTY*	1301660300A	05/06/1996
4	GEORGIA	TELFAIR COUNTY*	1301660325A	05/06/1996
4	GEORGIA	TELFAIR COUNTY*	1301660350A	05/06/1996
4	GEORGIA	TWIGGS COUNTY	1304060000	03/18/1996
4	GEORGIA	TWIGGS COUNTY	1304060125A	03/18/1996
4	GEORGIA	TWIGGS COUNTY	1304060200A	03/18/1996
4	GEORGIA	TWIGGS COUNTY	1304060225A	03/18/1996
4	GEORGIA	TWIGGS COUNTY	1304060300A	03/18/1996
4	GEORGIA	TWIGGS COUNTY	1304060325A	03/18/1996
4	GEORGIA	TYRONE, TOWN OF	13113C0000	03/18/1996
4	GEORGIA	TYRONE, TOWN OF	13113C0020D	03/18/1996
4	GEORGIA	TYRONE, TOWN OF	13113C0035D	03/18/1996
4	GEORGIA	TYRONE, TOWN OF	13113C0040D	03/18/1996
4	GEORGIA	TYRONE, TOWN OF	13113C0060D	03/18/1996
4	GEORGIA	TYRONE, TOWN OF	13113C0080D	03/18/1996
4	GEORGIA	WOOLSEY, TOWN OF	13113C0000	03/18/1996
4	GEORGIA	WOOLSEY, TOWN OF	13113C0095D	03/18/1996
4	KENTUCKY	PINEVILLE, CITY OF	2100120001C	06/04/1996
4	MISSISSIPPI	PEARL RIVER VALLEY WATER SUPPLY DISTRICT	2803380000	01/19/1996
4	MISSISSIPPI	PEARL RIVER VALLEY WATER SUPPLY DISTRICT	2803380050B	01/19/1996
4	MISSISSIPPI	PEARL RIVER VALLEY WATER SUPPLY DISTRICT	2803380055B	01/19/1996
4	MISSISSIPPI	PEARL RIVER VALLEY WATER SUPPLY DISTRICT	2803380065B	01/19/1996
4	MISSISSIPPI	PEARL RIVER VALLEY WATER SUPPLY DISTRICT	2803380070B	01/19/1996
4	NORTH CAROLINA	ASHEVILLE, CITY OF	37021C0000	05/06/1996
4	NORTH CAROLINA	ASHEVILLE, CITY OF	37021C0189C	05/06/1996
4	NORTH CAROLINA	ASHEVILLE, CITY OF	37021C0191C	05/06/1996
4	NORTH CAROLINA	ASHEVILLE, CITY OF	37021C0193C	05/06/1996
4	NORTH CAROLINA	ASHEVILLE, CITY OF	37021C0194C	05/06/1996

MAP REVISIONS—Continued

Region	State	Community	Panel number	Effective date
4	NORTH CAROLINA	ASHEVILLE, CITY OF	37021C0213C	05/06/1996
4	NORTH CAROLINA	ASHEVILLE, CITY OF	37021C0282C	05/06/1996
4	NORTH CAROLINA	ASHEVILLE, CITY OF	37021C0284C	05/06/1996
4	NORTH CAROLINA	ASHEVILLE, CITY OF	37021C0291C	05/06/1996
4	NORTH CAROLINA	ASHEVILLE, CITY OF	37021C0292C	05/06/1996
4	NORTH CAROLINA	ASHEVILLE, CITY OF	37021C0301C	05/06/1996
4	NORTH CAROLINA	ASHEVILLE, CITY OF	37021C0302C	05/06/1996
4	NORTH CAROLINA	ASHEVILLE, CITY OF	37021C0303C	05/06/1996
4	NORTH CAROLINA	ASHEVILLE, CITY OF	37021C0304C	05/06/1996
4	NORTH CAROLINA	ASHEVILLE, CITY OF	37021C0306C	05/06/1996
4	NORTH CAROLINA	ASHEVILLE, CITY OF	37021C0307C	05/06/1996
4	NORTH CAROLINA	ASHEVILLE, CITY OF	37021C0308C	05/06/1996
4	NORTH CAROLINA	ASHEVILLE, CITY OF	37021C0309C	05/06/1996
4	NORTH CAROLINA	ASHEVILLE, CITY OF	37021C0311C	05/06/1996
4	NORTH CAROLINA	ASHEVILLE, CITY OF	37021C0312C	05/06/1996
4	NORTH CAROLINA	ASHEVILLE, CITY OF	37021C0313C	05/06/1996
4	NORTH CAROLINA	ASHEVILLE, CITY OF	37021C0316C	05/06/1996
4	NORTH CAROLINA	ASHEVILLE, CITY OF	37021C0317C	05/06/1996
4	NORTH CAROLINA	ASHEVILLE, CITY OF	37021C0318C	05/06/1996
4	NORTH CAROLINA	ASHEVILLE, CITY OF	37021C0326C	05/06/1996
4	NORTH CAROLINA	ASHEVILLE, CITY OF	37021C0328C	05/06/1996
4	NORTH CAROLINA	ASHEVILLE, CITY OF	37021C0329C	05/06/1996
4	NORTH CAROLINA	ASHEVILLE, CITY OF	37021C0336C	05/06/1996
4	NORTH CAROLINA	ASHEVILLE, CITY OF	37021C0456C	05/06/1996
4	NORTH CAROLINA	ASHEVILLE, CITY OF	37021C0458C	05/06/1996
4	NORTH CAROLINA	ASHEVILLE, CITY OF	37021C0460C	05/06/1996
4	NORTH CAROLINA	ASHEVILLE, CITY OF	37021C0466C	05/06/1996
4	NORTH CAROLINA	BILTMORE FOREST, TOWN OF	37021C0000	05/06/1996
4	NORTH CAROLINA	BILTMORE FOREST, TOWN OF	37021C0316C	05/06/1996
4	NORTH CAROLINA	BILTMORE FOREST, TOWN OF	37021C0317C	05/06/1996
4	NORTH CAROLINA	BILTMORE FOREST, TOWN OF	37021C0318C	05/06/1996
4	NORTH CAROLINA	BLACK MOUNTAIN, TOWN OF	37021C0000	05/06/1996
4	NORTH CAROLINA	BLACK MOUNTAIN, TOWN OF	37021C0238C	05/06/1996
4	NORTH CAROLINA	BLACK MOUNTAIN, TOWN OF	37021C0239C	05/06/1996
4	NORTH CAROLINA	BLACK MOUNTAIN, TOWN OF	37021C0243C	05/06/1996
4	NORTH CAROLINA	BLACK MOUNTAIN, TOWN OF	37021C0351C	05/06/1996
4	NORTH CAROLINA	BLACK MOUNTAIN, TOWN OF	37021C0352C	05/06/1996
4	NORTH CAROLINA	BLACK MOUNTAIN, TOWN OF	37021C0356C	05/06/1996
4	NORTH CAROLINA	BUNCOMBE COUNTY*	37021C0000	05/06/1996
4	NORTH CAROLINA	BUNCOMBE COUNTY*	37021C0040C	05/06/1996
4	NORTH CAROLINA	BUNCOMBE COUNTY*	37021C0045C	05/06/1996
4	NORTH CAROLINA	BUNCOMBE COUNTY*	37021C0061C	05/06/1996
4	NORTH CAROLINA	BUNCOMBE COUNTY*	37021C0062C	05/06/1996
4	NORTH CAROLINA	BUNCOMBE COUNTY*	37021C0063C	05/06/1996
4	NORTH CAROLINA	BUNCOMBE COUNTY*	37021C0064C	05/06/1996
4	NORTH CAROLINA	BUNCOMBE COUNTY*	37021C0068C	05/06/1996
4	NORTH CAROLINA	BUNCOMBE COUNTY*	37021C0070C	05/06/1996
4	NORTH CAROLINA	BUNCOMBE COUNTY*	37021C0134C	05/06/1996
4	NORTH CAROLINA	BUNCOMBE COUNTY*	37021C0145C	05/06/1996
4	NORTH CAROLINA	BUNCOMBE COUNTY*	37021C0150C	05/06/1996
4	NORTH CAROLINA	BUNCOMBE COUNTY*	37021C0155C	05/06/1996
4	NORTH CAROLINA	BUNCOMBE COUNTY*	37021C0160C	05/06/1996
4	NORTH CAROLINA	BUNCOMBE COUNTY*	37021C0163C	05/06/1996
4	NORTH CAROLINA	BUNCOMBE COUNTY*	37021C0164C	05/06/1996
4	NORTH CAROLINA	BUNCOMBE COUNTY*	37021C0165C	05/06/1996
4	NORTH CAROLINA	BUNCOMBE COUNTY*	37021C0166C	05/06/1996
4	NORTH CAROLINA	BUNCOMBE COUNTY*	37021C0167C	05/06/1996
4	NORTH CAROLINA	BUNCOMBE COUNTY*	37021C0168C	05/06/1996
4	NORTH CAROLINA	BUNCOMBE COUNTY*	37021C0169C	05/06/1996
4	NORTH CAROLINA	BUNCOMBE COUNTY*	37021C0178C	05/06/1996
4	NORTH CAROLINA	BUNCOMBE COUNTY*	37021C0179C	05/06/1996
4	NORTH CAROLINA	BUNCOMBE COUNTY*	37021C0180C	05/06/1996
4	NORTH CAROLINA	BUNCOMBE COUNTY*	37021C0183C	05/06/1996
4	NORTH CAROLINA	BUNCOMBE COUNTY*	37021C0184C	05/06/1996
4	NORTH CAROLINA	BUNCOMBE COUNTY*	37021C0185C	05/06/1996
4	NORTH CAROLINA	BUNCOMBE COUNTY*	37021C0186C	05/06/1996
4	NORTH CAROLINA	BUNCOMBE COUNTY*	37021C0187C	05/06/1996
4	NORTH CAROLINA	BUNCOMBE COUNTY*	37021C0188C	05/06/1996
4	NORTH CAROLINA	BUNCOMBE COUNTY*	37021C0189C	05/06/1996
4	NORTH CAROLINA	BUNCOMBE COUNTY*	37021C0191C	05/06/1996
4	NORTH CAROLINA	BUNCOMBE COUNTY*	37021C0192C	05/06/1996
4	NORTH CAROLINA	BUNCOMBE COUNTY*	37021C0193C	05/06/1996

MAP REVISIONS—Continued

Region	State	Community	Panel number	Effective date
4	NORTH CAROLINA	BUNCOMBE COUNTY*	37021C0194C	05/06/1996
4	NORTH CAROLINA	BUNCOMBE COUNTY*	37021C0205C	05/06/1996
4	NORTH CAROLINA	BUNCOMBE COUNTY*	37021C0211C	05/06/1996
4	NORTH CAROLINA	BUNCOMBE COUNTY*	37021C0213C	05/06/1996
4	NORTH CAROLINA	BUNCOMBE COUNTY*	37021C0218C	05/06/1996
4	NORTH CAROLINA	BUNCOMBE COUNTY*	37021C0219C	05/06/1996
4	NORTH CAROLINA	BUNCOMBE COUNTY*	37021C0238C	05/06/1996
4	NORTH CAROLINA	BUNCOMBE COUNTY*	37021C0239C	05/06/1996
4	NORTH CAROLINA	BUNCOMBE COUNTY*	37021C0243C	05/06/1996
4	NORTH CAROLINA	BUNCOMBE COUNTY*	37021C0250C	05/06/1996
4	NORTH CAROLINA	BUNCOMBE COUNTY*	37021C0270C	05/06/1996
4	NORTH CAROLINA	BUNCOMBE COUNTY*	37021C0276C	05/06/1996
4	NORTH CAROLINA	BUNCOMBE COUNTY*	37021C0277C	05/06/1996
4	NORTH CAROLINA	BUNCOMBE COUNTY*	37021C0280C	05/06/1996
4	NORTH CAROLINA	BUNCOMBE COUNTY*	37021C0282C	05/06/1996
4	NORTH CAROLINA	BUNCOMBE COUNTY*	37021C0283C	05/06/1996
4	NORTH CAROLINA	BUNCOMBE COUNTY*	37021C0284C	05/06/1996
4	NORTH CAROLINA	BUNCOMBE COUNTY*	37021C0286C	05/06/1996
4	NORTH CAROLINA	BUNCOMBE COUNTY*	37021C0287C	05/06/1996
4	NORTH CAROLINA	BUNCOMBE COUNTY*	37021C0290C	05/06/1996
4	NORTH CAROLINA	BUNCOMBE COUNTY*	37021C0291C	05/06/1996
4	NORTH CAROLINA	BUNCOMBE COUNTY*	37021C0292C	05/06/1996
4	NORTH CAROLINA	BUNCOMBE COUNTY*	37021C0295C	05/06/1996
4	NORTH CAROLINA	BUNCOMBE COUNTY*	37021C0301C	05/06/1996
4	NORTH CAROLINA	BUNCOMBE COUNTY*	37021C0302C	05/06/1996
4	NORTH CAROLINA	BUNCOMBE COUNTY*	37021C0303C	05/06/1996
4	NORTH CAROLINA	BUNCOMBE COUNTY*	37021C0304C	05/06/1996
4	NORTH CAROLINA	BUNCOMBE COUNTY*	37021C0306C	05/06/1996
4	NORTH CAROLINA	BUNCOMBE COUNTY*	37021C0307C	05/06/1996
4	NORTH CAROLINA	BUNCOMBE COUNTY*	37021C0308C	05/06/1996
4	NORTH CAROLINA	BUNCOMBE COUNTY*	37021C0309C	05/06/1996
4	NORTH CAROLINA	BUNCOMBE COUNTY*	37021C0311C	05/06/1996
4	NORTH CAROLINA	BUNCOMBE COUNTY*	37021C0312C	05/06/1996
4	NORTH CAROLINA	BUNCOMBE COUNTY*	37021C0313C	05/06/1996
4	NORTH CAROLINA	BUNCOMBE COUNTY*	37021C0314C	05/06/1996
4	NORTH CAROLINA	BUNCOMBE COUNTY*	37021C0316C	05/06/1996
4	NORTH CAROLINA	BUNCOMBE COUNTY*	37021C0317C	05/06/1996
4	NORTH CAROLINA	BUNCOMBE COUNTY*	37021C0318C	05/06/1996
4	NORTH CAROLINA	BUNCOMBE COUNTY*	37021C0326C	05/06/1996
4	NORTH CAROLINA	BUNCOMBE COUNTY*	37021C0327C	05/06/1996
4	NORTH CAROLINA	BUNCOMBE COUNTY*	37021C0328C	05/06/1996
4	NORTH CAROLINA	BUNCOMBE COUNTY*	37021C0329C	05/06/1996
4	NORTH CAROLINA	BUNCOMBE COUNTY*	37021C0331C	05/06/1996
4	NORTH CAROLINA	BUNCOMBE COUNTY*	37021C0332C	05/06/1996
4	NORTH CAROLINA	BUNCOMBE COUNTY*	37021C0336C	05/06/1996
4	NORTH CAROLINA	BUNCOMBE COUNTY*	37021C0350C	05/06/1996
4	NORTH CAROLINA	BUNCOMBE COUNTY*	37021C0351C	05/06/1996
4	NORTH CAROLINA	BUNCOMBE COUNTY*	37021C0352C	05/06/1996
4	NORTH CAROLINA	BUNCOMBE COUNTY*	37021C0356C	05/06/1996
4	NORTH CAROLINA	BUNCOMBE COUNTY*	37021C0360C	05/06/1996
4	NORTH CAROLINA	BUNCOMBE COUNTY*	37021C0365C	05/06/1996
4	NORTH CAROLINA	BUNCOMBE COUNTY*	37021C0370C	05/06/1996
4	NORTH CAROLINA	BUNCOMBE COUNTY*	37021C0390C	05/06/1996
4	NORTH CAROLINA	BUNCOMBE COUNTY*	37021C0430C	05/06/1996
4	NORTH CAROLINA	BUNCOMBE COUNTY*	37021C0452C	05/06/1996
4	NORTH CAROLINA	BUNCOMBE COUNTY*	37021C0455C	05/06/1996
4	NORTH CAROLINA	BUNCOMBE COUNTY*	37021C0456C	05/06/1996
4	NORTH CAROLINA	BUNCOMBE COUNTY*	37021C0458C	05/06/1996
4	NORTH CAROLINA	BUNCOMBE COUNTY*	37021C0460C	05/06/1996
4	NORTH CAROLINA	BUNCOMBE COUNTY*	37021C0466C	05/06/1996
4	NORTH CAROLINA	BUNCOMBE COUNTY*	37021C0476C	05/06/1996
4	NORTH CAROLINA	BUNCOMBE COUNTY*	37021C0477C	05/06/1996
4	NORTH CAROLINA	BUNCOMBE COUNTY*	37021C0478C	05/06/1996
4	NORTH CAROLINA	BUNCOMBE COUNTY*	37021C0479C	05/06/1996
4	NORTH CAROLINA	BUNCOMBE COUNTY*	37021C0485C	05/06/1996
4	NORTH CAROLINA	BUNCOMBE COUNTY*	37021C0510C	05/06/1996
4	NORTH CAROLINA	DURHAM COUNTY*	37063C0000	02/02/1996
4	NORTH CAROLINA	DURHAM COUNTY*	37063C0005G	02/02/1996
4	NORTH CAROLINA	DURHAM COUNTY*	37063C0010G	02/02/1996
4	NORTH CAROLINA	DURHAM COUNTY*	37063C0015G	02/02/1996
4	NORTH CAROLINA	DURHAM COUNTY*	37063C0020G	02/02/1996
4	NORTH CAROLINA	DURHAM COUNTY*	37063C0030G	02/02/1996

MAP REVISIONS—Continued

Region	State	Community	Panel number	Effective date
4	NORTH CAROLINA	DURHAM COUNTY*	37063C0035G	02/02/1996
4	NORTH CAROLINA	DURHAM COUNTY*	37063C0040G	02/02/1996
4	NORTH CAROLINA	DURHAM COUNTY*	37063C0045G	02/02/1996
4	NORTH CAROLINA	DURHAM COUNTY*	37063C0053G	02/02/1996
4	NORTH CAROLINA	DURHAM COUNTY*	37063C0054G	02/02/1996
4	NORTH CAROLINA	DURHAM COUNTY*	37063C0055G	02/02/1996
4	NORTH CAROLINA	DURHAM COUNTY*	37063C0056G	02/02/1996
4	NORTH CAROLINA	DURHAM COUNTY*	37063C0057G	02/02/1996
4	NORTH CAROLINA	DURHAM COUNTY*	37063C0058G	02/02/1996
4	NORTH CAROLINA	DURHAM COUNTY*	37063C0059G	02/02/1996
4	NORTH CAROLINA	DURHAM COUNTY*	37063C0061G	02/02/1996
4	NORTH CAROLINA	DURHAM COUNTY*	37063C0062G	02/02/1996
4	NORTH CAROLINA	DURHAM COUNTY*	37063C0063G	02/02/1996
4	NORTH CAROLINA	DURHAM COUNTY*	37063C0064G	02/02/1996
4	NORTH CAROLINA	DURHAM COUNTY*	37063C0066G	02/02/1996
4	NORTH CAROLINA	DURHAM COUNTY*	37063C0067G	02/02/1996
4	NORTH CAROLINA	DURHAM COUNTY*	37063C0076G	02/02/1996
4	NORTH CAROLINA	DURHAM COUNTY*	37063C0078G	02/02/1996
4	NORTH CAROLINA	DURHAM COUNTY*	37063C0080G	02/02/1996
4	NORTH CAROLINA	DURHAM COUNTY*	37063C0085G	02/02/1996
4	NORTH CAROLINA	DURHAM COUNTY*	37063C0086G	02/02/1996
4	NORTH CAROLINA	DURHAM COUNTY*	37063C0087G	02/02/1996
4	NORTH CAROLINA	DURHAM COUNTY*	37063C0088G	02/02/1996
4	NORTH CAROLINA	DURHAM COUNTY*	37063C0089G	02/02/1996
4	NORTH CAROLINA	DURHAM COUNTY*	37063C0091G	02/02/1996
4	NORTH CAROLINA	DURHAM COUNTY*	37063C0093G	02/02/1996
4	NORTH CAROLINA	DURHAM COUNTY*	37063C0095G	02/02/1996
4	NORTH CAROLINA	DURHAM COUNTY*	37063C0115G	02/02/1996
4	NORTH CAROLINA	DURHAM COUNTY*	37063C0135G	02/02/1996
4	NORTH CAROLINA	DURHAM COUNTY*	37063C0145G	02/02/1996
4	NORTH CAROLINA	DURHAM COUNTY*	37063C0151G	02/02/1996
4	NORTH CAROLINA	DURHAM COUNTY*	37063C0152G	02/02/1996
4	NORTH CAROLINA	DURHAM COUNTY*	37063C0153G	02/02/1996
4	NORTH CAROLINA	DURHAM COUNTY*	37063C0154G	02/02/1996
4	NORTH CAROLINA	DURHAM COUNTY*	37063C0159G	02/02/1996
4	NORTH CAROLINA	DURHAM COUNTY*	37063C0162G	02/02/1996
4	NORTH CAROLINA	DURHAM COUNTY*	37063C0164G	02/02/1996
4	NORTH CAROLINA	DURHAM COUNTY*	37063C0165G	02/02/1996
4	NORTH CAROLINA	DURHAM COUNTY*	37063C0166G	02/02/1996
4	NORTH CAROLINA	DURHAM COUNTY*	37063C0167G	02/02/1996
4	NORTH CAROLINA	DURHAM COUNTY*	37063C0169G	02/02/1996
4	NORTH CAROLINA	DURHAM COUNTY*	37063C0176G	02/02/1996
4	NORTH CAROLINA	DURHAM COUNTY*	37063C0177G	02/02/1996
4	NORTH CAROLINA	DURHAM COUNTY*	37063C0178G	02/02/1996
4	NORTH CAROLINA	DURHAM COUNTY*	37063C0179G	02/02/1996
4	NORTH CAROLINA	DURHAM COUNTY*	37063C0181G	02/02/1996
4	NORTH CAROLINA	DURHAM COUNTY*	37063C0183G	02/02/1996
4	NORTH CAROLINA	DURHAM COUNTY*	37063C0185G	02/02/1996
4	NORTH CAROLINA	DURHAM COUNTY*	37063C0186G	02/02/1996
4	NORTH CAROLINA	DURHAM COUNTY*	37063C0187G	02/02/1996
4	NORTH CAROLINA	DURHAM COUNTY*	37063C0188G	02/02/1996
4	NORTH CAROLINA	DURHAM COUNTY*	37063C0189G	02/02/1996
4	NORTH CAROLINA	DURHAM COUNTY*	37063C0195G	02/02/1996
4	NORTH CAROLINA	DURHAM COUNTY*	37063C0205G	02/02/1996
4	NORTH CAROLINA	DURHAM COUNTY*	37063C0235G	02/02/1996
4	NORTH CAROLINA	DURHAM COUNTY*	37063C0255G	02/02/1996
4	NORTH CAROLINA	DURHAM COUNTY*	37063C0256G	02/02/1996
4	NORTH CAROLINA	DURHAM COUNTY*	37063C0257G	02/02/1996
4	NORTH CAROLINA	DURHAM COUNTY*	37063C0280G	02/02/1996
4	NORTH CAROLINA	DURHAM, CITY OF	37063C0000	02/02/1996
4	NORTH CAROLINA	DURHAM, CITY OF	37063C0054G	02/02/1996
4	NORTH CAROLINA	DURHAM, CITY OF	37063C0058G	02/02/1996
4	NORTH CAROLINA	DURHAM, CITY OF	37063C0059G	02/02/1996
4	NORTH CAROLINA	DURHAM, CITY OF	37063C0061G	02/02/1996
4	NORTH CAROLINA	DURHAM, CITY OF	37063C0062G	02/02/1996
4	NORTH CAROLINA	DURHAM, CITY OF	37063C0063G	02/02/1996
4	NORTH CAROLINA	DURHAM, CITY OF	37063C0064G	02/02/1996
4	NORTH CAROLINA	DURHAM, CITY OF	37063C0066G	02/02/1996
4	NORTH CAROLINA	DURHAM, CITY OF	37063C0067G	02/02/1996
4	NORTH CAROLINA	DURHAM, CITY OF	37063C0068G	02/02/1996
4	NORTH CAROLINA	DURHAM, CITY OF	37063C0069G	02/02/1996
4	NORTH CAROLINA	DURHAM, CITY OF	37063C0078G	02/02/1996

MAP REVISIONS—Continued

Region	State	Community	Panel number	Effective date
4	NORTH CAROLINA	DURHAM, CITY OF	37063C0086G	02/02/1996
4	NORTH CAROLINA	DURHAM, CITY OF	37063C0088G	02/02/1996
4	NORTH CAROLINA	DURHAM, CITY OF	37063C0089G	02/02/1996
4	NORTH CAROLINA	DURHAM, CITY OF	37063C0135G	02/02/1996
4	NORTH CAROLINA	DURHAM, CITY OF	37063C0151G	02/02/1996
4	NORTH CAROLINA	DURHAM, CITY OF	37063C0152G	02/02/1996
4	NORTH CAROLINA	DURHAM, CITY OF	37063C0153G	02/02/1996
4	NORTH CAROLINA	DURHAM, CITY OF	37063C0154G	02/02/1996
4	NORTH CAROLINA	DURHAM, CITY OF	37063C0156G	02/02/1996
4	NORTH CAROLINA	DURHAM, CITY OF	37063C0157G	02/02/1996
4	NORTH CAROLINA	DURHAM, CITY OF	37063C0158G	02/02/1996
4	NORTH CAROLINA	DURHAM, CITY OF	37063C0159G	02/02/1996
4	NORTH CAROLINA	DURHAM, CITY OF	37063C0162G	02/02/1996
4	NORTH CAROLINA	DURHAM, CITY OF	37063C0164G	02/02/1996
4	NORTH CAROLINA	DURHAM, CITY OF	37063C0165G	02/02/1996
4	NORTH CAROLINA	DURHAM, CITY OF	37063C0166G	02/02/1996
4	NORTH CAROLINA	DURHAM, CITY OF	37063C0167G	02/02/1996
4	NORTH CAROLINA	DURHAM, CITY OF	37063C0169G	02/02/1996
4	NORTH CAROLINA	DURHAM, CITY OF	37063C0176G	02/02/1996
4	NORTH CAROLINA	DURHAM, CITY OF	37063C0177G	02/02/1996
4	NORTH CAROLINA	DURHAM, CITY OF	37063C0178G	02/02/1996
4	NORTH CAROLINA	DURHAM, CITY OF	37063C0179G	02/02/1996
4	NORTH CAROLINA	DURHAM, CITY OF	37063C0181G	02/02/1996
4	NORTH CAROLINA	DURHAM, CITY OF	37063C0183G	02/02/1996
4	NORTH CAROLINA	DURHAM, CITY OF	37063C0186G	02/02/1996
4	NORTH CAROLINA	DURHAM, CITY OF	37063C0187G	02/02/1996
4	NORTH CAROLINA	DURHAM, CITY OF	37063C0188G	02/02/1996
4	NORTH CAROLINA	DURHAM, CITY OF	37063C0189G	02/02/1996
4	NORTH CAROLINA	DURHAM, CITY OF	37063C0280G	02/02/1996
4	NORTH CAROLINA	JUPITER, TOWN OF	37021C0000	05/06/1996
4	NORTH CAROLINA	MONTREAT, TOWN OF	37021C0000	05/06/1996
4	NORTH CAROLINA	MONTREAT, TOWN OF	37021C0239C	05/06/1996
4	NORTH CAROLINA	MONTREAT, TOWN OF	37021C0243C	05/06/1996
4	NORTH CAROLINA	MONTREAT, TOWN OF	37021C0250C	05/06/1996
4	NORTH CAROLINA	NAGS HEAD, CITY OF	3753560000	03/06/1996
4	NORTH CAROLINA	NAGS HEAD, CITY OF	3753560002F	03/06/1996
4	NORTH CAROLINA	WEAVERVILLE, TOWN OF	37021C0000	05/06/1996
4	NORTH CAROLINA	WEAVERVILLE, TOWN OF	37021C0179C	05/06/1996
4	NORTH CAROLINA	WEAVERVILLE, TOWN OF	37021C0183C	05/06/1996
4	NORTH CAROLINA	WEAVERVILLE, TOWN OF	37021C0184C	05/06/1996
4	NORTH CAROLINA	WEAVERVILLE, TOWN OF	37021C0187C	05/06/1996
4	NORTH CAROLINA	WEAVERVILLE, TOWN OF	37021C0191C	05/06/1996
4	NORTH CAROLINA	WOODFIN, TOWN OF	37021C0000	05/06/1996
4	NORTH CAROLINA	WOODFIN, TOWN OF	37021C0187C	05/06/1996
4	NORTH CAROLINA	WOODFIN, TOWN OF	37021C0188C	05/06/1996
4	NORTH CAROLINA	WOODFIN, TOWN OF	37021C0189C	05/06/1996
4	NORTH CAROLINA	WOODFIN, TOWN OF	37021C0301C	05/06/1996
4	NORTH CAROLINA	WOODFIN, TOWN OF	37021C0302C	05/06/1996
4	SOUTH CAROLINA	BERKELEY COUNTY*	4500290000	05/06/1996
4	SOUTH CAROLINA	BERKELEY COUNTY*	4500290025C	05/06/1996
4	SOUTH CAROLINA	BERKELEY COUNTY*	4500290040C	05/06/1996
4	SOUTH CAROLINA	BERKELEY COUNTY*	4500290050C	05/06/1996
4	SOUTH CAROLINA	BERKELEY COUNTY*	4500290075C	05/06/1996
4	SOUTH CAROLINA	BERKELEY COUNTY*	4500290080C	05/06/1996
4	SOUTH CAROLINA	BERKELEY COUNTY*	4500290085C	05/06/1996
4	SOUTH CAROLINA	BERKELEY COUNTY*	4500290095C	05/06/1996
4	SOUTH CAROLINA	BERKELEY COUNTY*	4500290100C	05/06/1996
4	SOUTH CAROLINA	BERKELEY COUNTY*	4500290125C	05/06/1996
4	SOUTH CAROLINA	BERKELEY COUNTY*	4500290150C	05/06/1996
4	SOUTH CAROLINA	BERKELEY COUNTY*	4500290170C	05/06/1996
4	SOUTH CAROLINA	BERKELEY COUNTY*	4500290175C	05/06/1996
4	SOUTH CAROLINA	BERKELEY COUNTY*	4500290180C	05/06/1996
4	SOUTH CAROLINA	BERKELEY COUNTY*	4500290190C	05/06/1996
4	SOUTH CAROLINA	BERKELEY COUNTY*	4500290200C	05/06/1996
4	SOUTH CAROLINA	BERKELEY COUNTY*	4500290225C	05/06/1996
4	SOUTH CAROLINA	BERKELEY COUNTY*	4500290250C	05/06/1996
4	SOUTH CAROLINA	BERKELEY COUNTY*	4500290260C	05/06/1996
4	SOUTH CAROLINA	BERKELEY COUNTY*	4500290270C	05/06/1996
4	SOUTH CAROLINA	BERKELEY COUNTY*	4500290275C	05/06/1996
4	SOUTH CAROLINA	BERKELEY COUNTY*	4500290280C	05/06/1996
4	SOUTH CAROLINA	BERKELEY COUNTY*	4500290285C	05/06/1996
4	SOUTH CAROLINA	BERKELEY COUNTY*	4500290290C	05/06/1996

MAP REVISIONS—Continued

Region	State	Community	Panel number	Effective date
4	SOUTH CAROLINA	BERKELEY COUNTY*	4500290295C	05/06/1996
4	SOUTH CAROLINA	BERKELEY COUNTY*	4500290310C	05/06/1996
4	SOUTH CAROLINA	BERKELEY COUNTY*	4500290320C	05/06/1996
4	SOUTH CAROLINA	BERKELEY COUNTY*	4500290325C	05/06/1996
4	SOUTH CAROLINA	BERKELEY COUNTY*	4500290350C	05/06/1996
4	SOUTH CAROLINA	BERKELEY COUNTY*	4500290355C	05/06/1996
4	SOUTH CAROLINA	BERKELEY COUNTY*	4500290360C	05/06/1996
4	SOUTH CAROLINA	BERKELEY COUNTY*	4500290375C	05/06/1996
4	SOUTH CAROLINA	BERKELEY COUNTY*	4500290380C	05/06/1996
4	SOUTH CAROLINA	BERKELEY COUNTY*	4500290385C	05/06/1996
4	SOUTH CAROLINA	BERKELEY COUNTY*	4500290390C	05/06/1996
4	SOUTH CAROLINA	BERKELEY COUNTY*	4500290395C	05/06/1996
4	SOUTH CAROLINA	BERKELEY COUNTY*	4500290405C	05/06/1996
4	SOUTH CAROLINA	BERKELEY COUNTY*	4500290410C	05/06/1996
5	ILLINOIS	ADAMS COUNTY*	1700010000	01/19/1996
5	ILLINOIS	ADAMS COUNTY*	1700010160C	01/19/1996
5	ILLINOIS	ADAMS COUNTY*	1700010170C	01/19/1996
5	ILLINOIS	ADAMS COUNTY*	1700010250C	01/19/1996
5	ILLINOIS	CENTRAL CITY, VILLAGE OF	1704520001D	03/18/1996
5	ILLINOIS	KANE COUNTY*	1708960000	06/04/1996
5	ILLINOIS	KANE COUNTY*	1708960032B	06/04/1996
5	ILLINOIS	KANE COUNTY*	1708960034B	06/04/1996
5	ILLINOIS	KANE COUNTY*	1708960035B	06/04/1996
5	ILLINOIS	KANE COUNTY*	1708960041B	06/04/1996
5	ILLINOIS	KANE COUNTY*	1708960043B	06/04/1996
5	ILLINOIS	KANE COUNTY*	1708960044B	06/04/1996
5	ILLINOIS	KANE COUNTY*	1708960045B	06/04/1996
5	ILLINOIS	KANE COUNTY*	1708960055B	06/04/1996
5	ILLINOIS	KANE COUNTY*	1708960061B	06/04/1996
5	ILLINOIS	KANE COUNTY*	1708960063B	06/04/1996
5	ILLINOIS	KANE COUNTY*	1708960065B	06/04/1996
5	ILLINOIS	KANE COUNTY*	1708960070B	06/04/1996
5	ILLINOIS	KANE COUNTY*	1708960084B	06/04/1996
5	ILLINOIS	KANE COUNTY*	1708960092B	06/04/1996
5	ILLINOIS	KANE COUNTY*	1708960100B	06/04/1996
5	ILLINOIS	KANE COUNTY*	1708960102B	06/04/1996
5	ILLINOIS	KANE COUNTY*	1708960106B	06/04/1996
5	ILLINOIS	KANE COUNTY*	1708960107B	06/04/1996
5	ILLINOIS	KANE COUNTY*	1708960125B	06/04/1996
5	ILLINOIS	KANE COUNTY*	1708960130B	06/04/1996
5	ILLINOIS	KANE COUNTY*	1708960135B	06/04/1996
5	INDIANA	COLUMBUS, CITY OF	1800070000	01/05/1996
5	INDIANA	COLUMBUS, CITY OF	1800070005C	01/05/1996
5	INDIANA	COLUMBUS, CITY OF	1800070010C	01/05/1996
5	INDIANA	COLUMBUS, CITY OF	1800070015C	01/05/1996
5	INDIANA	COLUMBUS, CITY OF	1800070020C	01/05/1996
5	INDIANA	COLUMBUS, CITY OF	1800070025C	01/05/1996
5	INDIANA	COLUMBUS, CITY OF	1800070030C	01/05/1996
5	INDIANA	LA PORTE COUNTY*	1801440000	06/04/1996
5	INDIANA	LA PORTE COUNTY*	1801440025C	06/04/1996
5	INDIANA	LA PORTE COUNTY*	1801440050C	06/04/1996
5	INDIANA	LA PORTE COUNTY*	1801440125C	06/04/1996
5	INDIANA	LA PORTE COUNTY*	1801440150C	06/04/1996
5	INDIANA	LA PORTE COUNTY*	1801440175C	06/04/1996
5	INDIANA	LA PORTE COUNTY*	1801440200C	06/04/1996
5	INDIANA	LA PORTE COUNTY*	1801440225C	06/04/1996
5	INDIANA	LA PORTE COUNTY*	1801440250C	06/04/1996
5	INDIANA	LA PORTE COUNTY*	1801440275C	06/04/1996
5	INDIANA	LA PORTE, CITY OF	1804900005C	06/04/1996
5	INDIANA	TIPTON, CITY OF	1802550001C	03/05/1996
5	MICHIGAN	ALLEN PARK, CITY OF	2602170002C	05/06/1996
5	MICHIGAN	AUBURN, CITY OF	26017C0000	06/18/1996
5	MICHIGAN	AUBURN, CITY OF	26017C0165D	06/18/1996
5	MICHIGAN	BANGOR, TOWNSHIP OF	26017C0000	06/18/1996
5	MICHIGAN	BANGOR, TOWNSHIP OF	26017C0115D	06/18/1996
5	MICHIGAN	BANGOR, TOWNSHIP OF	26017C0140D	06/18/1996
5	MICHIGAN	BANGOR, TOWNSHIP OF	26017C0145D	06/18/1996
5	MICHIGAN	BANGOR, TOWNSHIP OF	26017C0175D	06/18/1996
5	MICHIGAN	BANGOR, TOWNSHIP OF	26017C0180D	06/18/1996
5	MICHIGAN	BAY CITY, CITY OF	26017C0000	06/18/1996
5	MICHIGAN	BAY CITY, CITY OF	26017C0175D	06/18/1996
5	MICHIGAN	BAY CITY, CITY OF	26017C0180D	06/18/1996

MAP REVISIONS—Continued

Region	State	Community	Panel number	Effective date
5	MICHIGAN	BAY CITY, CITY OF	26017C0205D	06/18/1996
5	MICHIGAN	BAY COUNTY*	26017C0000	06/18/1996
5	MICHIGAN	BEAVER, TOWNSHIP OF	26017C0000	06/18/1996
5	MICHIGAN	BEAVER, TOWNSHIP OF	26017C0100D	06/18/1996
5	MICHIGAN	BEAVER, TOWNSHIP OF	26017C0105D	06/18/1996
5	MICHIGAN	BEAVER, TOWNSHIP OF	26017C0125D	06/18/1996
5	MICHIGAN	BEAVER, TOWNSHIP OF	26017C0130D	06/18/1996
5	MICHIGAN	CADILLAC, CITY OF	2602470002B	03/18/1996
5	MICHIGAN	DEARBORN HEIGHTS, CITY OF	2602210000	05/06/1996
5	MICHIGAN	DEARBORN HEIGHTS, CITY OF	2602210007C	05/06/1996
5	MICHIGAN	DEARBORN, CITY OF	2602200000	05/06/1996
5	MICHIGAN	DEARBORN, CITY OF	2602200005D	05/06/1996
5	MICHIGAN	DEARBORN, CITY OF	2602200010D	05/06/1996
5	MICHIGAN	ESSEXVILLE, CITY OF	26017C0000	06/18/1996
5	MICHIGAN	ESSEXVILLE, CITY OF	26017C0180D	06/18/1996
5	MICHIGAN	FRANKENLUST, TOWNSHIP OF	26017C0000	06/18/1996
5	MICHIGAN	FRANKENLUST, TOWNSHIP OF	26017C0165D	06/18/1996
5	MICHIGAN	FRANKENLUST, TOWNSHIP OF	26017C0170D	06/18/1996
5	MICHIGAN	FRANKENLUST, TOWNSHIP OF	26017C0175D	06/18/1996
5	MICHIGAN	FRANKENLUST, TOWNSHIP OF	26017C0195D	06/18/1996
5	MICHIGAN	FRANKENLUST, TOWNSHIP OF	26017C0200D	06/18/1996
5	MICHIGAN	FRANKENLUST, TOWNSHIP OF	26017C0205D	06/18/1996
5	MICHIGAN	FRASER, TOWNSHIP OF	26017C0000	06/18/1996
5	MICHIGAN	FRASER, TOWNSHIP OF	26017C0055D	06/18/1996
5	MICHIGAN	FRASER, TOWNSHIP OF	26017C0060D	06/18/1996
5	MICHIGAN	FRASER, TOWNSHIP OF	26017C0065D	06/18/1996
5	MICHIGAN	FRASER, TOWNSHIP OF	26017C0080D	06/18/1996
5	MICHIGAN	FRASER, TOWNSHIP OF	26017C0085D	06/18/1996
5	MICHIGAN	FRASER, TOWNSHIP OF	26017C0090D	06/18/1996
5	MICHIGAN	FRASER, TOWNSHIP OF	26017C0105D	06/18/1996
5	MICHIGAN	FRASER, TOWNSHIP OF	26017C0110D	06/18/1996
5	MICHIGAN	GARFIELD, TOWNSHIP OF	26017C0000	06/18/1996
5	MICHIGAN	GARFIELD, TOWNSHIP OF	26017C0055D	06/18/1996
5	MICHIGAN	GARFIELD, TOWNSHIP OF	26017C0080D	06/18/1996
5	MICHIGAN	GARFIELD, TOWNSHIP OF	26017C0100D	06/18/1996
5	MICHIGAN	GARFIELD, TOWNSHIP OF	26017C0105D	06/18/1996
5	MICHIGAN	GIBSON, TOWNSHIP OF	26017C0000	06/18/1996
5	MICHIGAN	GIBSON, TOWNSHIP OF	26017C0030D	06/18/1996
5	MICHIGAN	HAMPTON, TOWNSHIP OF	26017C0000	06/18/1996
5	MICHIGAN	HAMPTON, TOWNSHIP OF	26017C0145D	06/18/1996
5	MICHIGAN	HAMPTON, TOWNSHIP OF	26017C0150D	06/18/1996
5	MICHIGAN	HAMPTON, TOWNSHIP OF	26017C0180D	06/18/1996
5	MICHIGAN	HAMPTON, TOWNSHIP OF	26017C0185D	06/18/1996
5	MICHIGAN	HAMPTON, TOWNSHIP OF	26017C0190D	06/18/1996
5	MICHIGAN	KAWKAWLIN, TOWNSHIP OF	26017C0000	06/18/1996
5	MICHIGAN	KAWKAWLIN, TOWNSHIP OF	26017C0105D	06/18/1996
5	MICHIGAN	KAWKAWLIN, TOWNSHIP OF	26017C0110D	06/18/1996
5	MICHIGAN	KAWKAWLIN, TOWNSHIP OF	26017C0115D	06/18/1996
5	MICHIGAN	KAWKAWLIN, TOWNSHIP OF	26017C0130D	06/18/1996
5	MICHIGAN	KAWKAWLIN, TOWNSHIP OF	26017C0135D	06/18/1996
5	MICHIGAN	KAWKAWLIN, TOWNSHIP OF	26017C0140D	06/18/1996
5	MICHIGAN	MERRITT, TOWNSHIP OF	26017C0000	06/18/1996
5	MICHIGAN	MERRITT, TOWNSHIP OF	26017C0185D	06/18/1996
5	MICHIGAN	MERRITT, TOWNSHIP OF	26017C0190D	06/18/1996
5	MICHIGAN	MERRITT, TOWNSHIP OF	26017C0210D	06/18/1996
5	MICHIGAN	MERRITT, TOWNSHIP OF	26017C0215D	06/18/1996
5	MICHIGAN	MERRITT, TOWNSHIP OF	26017C0220D	06/18/1996
5	MICHIGAN	MIDLAND, CITY OF	26017C0000	06/18/1996
5	MICHIGAN	MONITOR, TOWNSHIP OF	26017C0000	06/18/1996
5	MICHIGAN	MONITOR, TOWNSHIP OF	26017C0130D	06/18/1996
5	MICHIGAN	MONITOR, TOWNSHIP OF	26017C0135D	06/18/1996
5	MICHIGAN	MONITOR, TOWNSHIP OF	26017C0140D	06/18/1996
5	MICHIGAN	MONITOR, TOWNSHIP OF	26017C0165D	06/18/1996
5	MICHIGAN	MONITOR, TOWNSHIP OF	26017C0170D	06/18/1996
5	MICHIGAN	MONITOR, TOWNSHIP OF	26017C0175D	06/18/1996
5	MICHIGAN	MOUNT FOREST, TOWNSHIP OF	26017C0000	06/18/1996
5	MICHIGAN	MOUNT FOREST, TOWNSHIP OF	26017C0030D	06/18/1996
5	MICHIGAN	MOUNT FOREST, TOWNSHIP OF	26017C0055D	06/18/1996
5	MICHIGAN	PINCONNING, CITY OF	26017C0000	06/18/1996
5	MICHIGAN	PINCONNING, CITY OF	26017C0060D	06/18/1996
5	MICHIGAN	PINCONNING, TOWNSHIP OF	26017C0000	06/18/1996
5	MICHIGAN	PINCONNING, TOWNSHIP OF	26017C0030D	06/18/1996

MAP REVISIONS—Continued

Region	State	Community	Panel number	Effective date
5	MICHIGAN	PINCONNING, TOWNSHIP OF	26017C0035D	06/18/1996
5	MICHIGAN	PINCONNING, TOWNSHIP OF	26017C0040D	06/18/1996
5	MICHIGAN	PINCONNING, TOWNSHIP OF	26017C0055D	06/18/1996
5	MICHIGAN	PINCONNING, TOWNSHIP OF	26017C0060D	06/18/1996
5	MICHIGAN	PINCONNING, TOWNSHIP OF	26017C0065D	06/18/1996
5	MICHIGAN	PLYMOUTH, CITY OF	2602360001C	01/05/1996
5	MICHIGAN	PLYMOUTH, TOWNSHIP OF	2602370005C	01/05/1996
5	MICHIGAN	PORTSMOUTH, TOWNSHIP OF	26017C0000	06/18/1996
5	MICHIGAN	PORTSMOUTH, TOWNSHIP OF	26017C0175D	06/18/1996
5	MICHIGAN	PORTSMOUTH, TOWNSHIP OF	26017C0180D	06/18/1996
5	MICHIGAN	PORTSMOUTH, TOWNSHIP OF	26017C0185D	06/18/1996
5	MICHIGAN	PORTSMOUTH, TOWNSHIP OF	26017C0205D	06/18/1996
5	MICHIGAN	PORTSMOUTH, TOWNSHIP OF	26017C0210D	06/18/1996
5	MICHIGAN	PORTSMOUTH, TOWNSHIP OF	26017C0215D	06/18/1996
5	MICHIGAN	SELMA, TOWNSHIP OF	2607570005B	01/19/1996
5	MICHIGAN	TAYLOR, CITY OF	2607280000	05/06/1996
5	MICHIGAN	TAYLOR, CITY OF	2607280001B	05/06/1996
5	MICHIGAN	WILLIAMS, TOWNSHIP OF	26017C0000	06/18/1996
5	MICHIGAN	WILLIAMS, TOWNSHIP OF	26017C0125D	06/18/1996
5	MICHIGAN	WILLIAMS, TOWNSHIP OF	26017C0130D	06/18/1996
5	MICHIGAN	WILLIAMS, TOWNSHIP OF	26017C0165D	06/18/1996
5	MINNESOTA	AITKIN COUNTY*	2706280000	02/02/1996
5	MINNESOTA	AITKIN COUNTY*	2706280205C	02/02/1996
5	MINNESOTA	AITKIN COUNTY*	2706280215C	02/02/1996
5	MINNESOTA	AITKIN COUNTY*	2706280240C	02/02/1996
5	MINNESOTA	AITKIN COUNTY*	2706280325C	02/02/1996
5	MINNESOTA	AITKIN COUNTY*	2706280400C	02/02/1996
5	MINNESOTA	ALVARADO, CITY OF	2702670001B	04/03/1996
5	OHIO	FAIRFIELD COUNTY*	3901580000	04/17/1996
5	OHIO	FAIRFIELD COUNTY*	3901580140E	04/17/1996
5	OHIO	KENTON, CITY OF	3902530001C	04/17/1996
5	OHIO	OAKWOOD, VILLAGE OF	3904370001C	01/05/1996
5	OHIO	PAULDING COUNTY*	3907770000	01/05/1996
5	OHIO	PAULDING COUNTY*	3907770025D	01/05/1996
5	OHIO	PAULDING COUNTY*	3907770050D	01/05/1996
5	OHIO	PAULDING COUNTY*	3907770065D	01/05/1996
5	OHIO	PAULDING COUNTY*	3907770150D	01/05/1996
5	OHIO	PAYNE, VILLAGE OF	3904390001B	02/02/1996
5	WISCONSIN	CADOTT, VILLAGE OF	5500430001B	03/05/1996
5	WISCONSIN	DANE COUNTY*	5500770000	03/05/1996
5	WISCONSIN	DANE COUNTY*	5500770125D	03/05/1996
5	WISCONSIN	DANE COUNTY*	5500770225B	03/05/1996
5	WISCONSIN	DANE COUNTY*	5500770250B	03/05/1996
5	WISCONSIN	DANE COUNTY*	5500770327C	03/05/1996
5	WISCONSIN	DANE COUNTY*	5500770329C	03/05/1996
5	WISCONSIN	DANE COUNTY*	5500770331C	03/05/1996
5	WISCONSIN	DANE COUNTY*	5500770350C	03/05/1996
5	WISCONSIN	DANE COUNTY*	5500770450C	03/05/1996
5	WISCONSIN	MADISON, CITY OF	5500830000	03/05/1996
5	WISCONSIN	MADISON, CITY OF	5500830005E	03/05/1996
5	WISCONSIN	MIDDLETON, CITY OF	5500870002C	03/05/1996
5	WISCONSIN	VERONA, CITY OF	5500920001C	02/16/1996
5	WISCONSIN	WATERTOWN, CITY OF	5501070005C	02/16/1996
6	ARKANSAS	ALMA, CITY OF	05033C0000	05/20/1996
6	ARKANSAS	BRYANT, CITY OF	0503080001C	01/19/1996
6	ARKANSAS	CHESTER, TOWN OF	05033C0000	05/20/1996
6	ARKANSAS	CRAWFORD COUNTY*	05033C0000	05/20/1996
6	ARKANSAS	CRAWFORD COUNTY*	05033C0170F	05/20/1996
6	ARKANSAS	DYER, TOWN OF	05033C0000	05/20/1996
6	ARKANSAS	EAST CAMDEN, CITY OF	0501640001A	01/05/1996
6	ARKANSAS	KIBLER, CITY OF	05033C0000	05/20/1996
6	ARKANSAS	MOUNTAINBURG, CITY OF	05033C0000	05/20/1996
6	ARKANSAS	MULBERRY, CITY OF	05033C0000	05/20/1996
6	ARKANSAS	OUACHITA COUNTY*	501610000	01/05/1996
6	ARKANSAS	OUACHITA COUNTY*	0501610025C	01/05/1996
6	ARKANSAS	OUACHITA COUNTY*	0501610050C	01/05/1996
6	ARKANSAS	OUACHITA COUNTY*	0501610075C	01/05/1996
6	ARKANSAS	OUACHITA COUNTY*	0501610100C	01/05/1996
6	ARKANSAS	OUACHITA COUNTY*	0501610120D	01/05/1996
6	ARKANSAS	OUACHITA COUNTY*	0501610125D	01/05/1996
6	ARKANSAS	OUACHITA COUNTY*	0501610130C	01/05/1996
6	ARKANSAS	OUACHITA COUNTY*	0501610140C	01/05/1996

MAP REVISIONS—Continued

Region	State	Community	Panel number	Effective date
6	ARKANSAS	OUACHITA COUNTY*	0501610175C	01/05/1996
6	ARKANSAS	OUACHITA COUNTY*	0501610180D	01/05/1996
6	ARKANSAS	OUACHITA COUNTY*	0501610185D	01/05/1996
6	ARKANSAS	OUACHITA COUNTY*	0501610200D	01/05/1996
6	ARKANSAS	OUACHITA COUNTY*	0501610225C	01/05/1996
6	ARKANSAS	OUACHITA COUNTY*	0501610250C	01/05/1996
6	ARKANSAS	OUACHITA COUNTY*	0501610275C	01/05/1996
6	ARKANSAS	RUDY, TOWN OF	05033C0000	05/20/1996
6	ARKANSAS	SALINE COUNTY*	501910000	01/19/1996
6	ARKANSAS	SALINE COUNTY*	0501910230C	01/19/1996
6	ARKANSAS	VAN BUREN, CITY OF	05033C0000	05/20/1996
6	ARKANSAS	VAN BUREN, CITY OF	05033C0170F	05/20/1996
6	LOUISIANA	BROUSSARD, TOWN OF	22055C0000	01/19/1996
6	LOUISIANA	BROUSSARD, TOWN OF	22055C0050G	01/19/1996
6	LOUISIANA	BROUSSARD, TOWN OF	22055C0070G	01/19/1996
6	LOUISIANA	CALCASIEU PARISH*	2200370000	02/02/1996
6	LOUISIANA	CALCASIEU PARISH*	2200370225C	02/02/1996
6	LOUISIANA	CALCASIEU PARISH*	2200370250C	02/02/1996
6	LOUISIANA	CALCASIEU PARISH*	2200370275C	02/02/1996
6	LOUISIANA	CALCASIEU PARISH*	2200370400C	02/02/1996
6	LOUISIANA	CARENCRO, TOWN OF	22055C0000	01/19/1996
6	LOUISIANA	CARENCRO, TOWN OF	22055C0010G	01/19/1996
6	LOUISIANA	CARENCRO, TOWN OF	22055C0025G	01/19/1996
6	LOUISIANA	DUSON, TOWN OF	22055C0000	01/19/1996
6	LOUISIANA	DUSON, TOWN OF	22055C0035G	01/19/1996
6	LOUISIANA	DUSON, TOWN OF	22055C0040G	01/19/1996
6	LOUISIANA	LAFAYETTE PARISH*	22055C0000	01/19/1996
6	LOUISIANA	LAFAYETTE PARISH*	22055C0005G	01/19/1996
6	LOUISIANA	LAFAYETTE PARISH*	22055C0010G	01/19/1996
6	LOUISIANA	LAFAYETTE PARISH*	22055C0015G	01/19/1996
6	LOUISIANA	LAFAYETTE PARISH*	22055C0020G	01/19/1996
6	LOUISIANA	LAFAYETTE PARISH*	22055C0025G	01/19/1996
6	LOUISIANA	LAFAYETTE PARISH*	22055C0030G	01/19/1996
6	LOUISIANA	LAFAYETTE PARISH*	22055C0035G	01/19/1996
6	LOUISIANA	LAFAYETTE PARISH*	22055C0040G	01/19/1996
6	LOUISIANA	LAFAYETTE PARISH*	22055C0045G	01/19/1996
6	LOUISIANA	LAFAYETTE PARISH*	22055C0050G	01/19/1996
6	LOUISIANA	LAFAYETTE PARISH*	22055C0055G	01/19/1996
6	LOUISIANA	LAFAYETTE PARISH*	22055C0060G	01/19/1996
6	LOUISIANA	LAFAYETTE PARISH*	22055C0065G	01/19/1996
6	LOUISIANA	LAFAYETTE PARISH*	22055C0070G	01/19/1996
6	LOUISIANA	LAFAYETTE PARISH*	22055C0075G	01/19/1996
6	LOUISIANA	LAFAYETTE PARISH*	22055C0080G	01/19/1996
6	LOUISIANA	LAFAYETTE, CITY OF	22055C0000	01/19/1996
6	LOUISIANA	LAFAYETTE, CITY OF	22055C0025G	01/19/1996
6	LOUISIANA	LAFAYETTE, CITY OF	22055C0030G	01/19/1996
6	LOUISIANA	LAFAYETTE, CITY OF	22055C0040G	01/19/1996
6	LOUISIANA	LAFAYETTE, CITY OF	22055C0045G	01/19/1996
6	LOUISIANA	LAFAYETTE, CITY OF	22055C0050G	01/19/1996
6	LOUISIANA	LAFAYETTE, CITY OF	22055C0060G	01/19/1996
6	LOUISIANA	LAFAYETTE, CITY OF	22055C0065G	01/19/1996
6	LOUISIANA	LAFAYETTE, CITY OF	22055C0070G	01/19/1996
6	LOUISIANA	MORGAN CITY, CITY OF	2201960001D	05/20/1996
6	LOUISIANA	RUSTON, CITY OF	2203470000	01/19/1996
6	LOUISIANA	RUSTON, CITY OF	2203470001C	01/19/1996
6	LOUISIANA	RUSTON, CITY OF	2203470002C	01/19/1996
6	LOUISIANA	RUSTON, CITY OF	2203470003C	01/19/1996
6	LOUISIANA	RUSTON, CITY OF	2203470004C	01/19/1996
6	LOUISIANA	RUSTON, CITY OF	2203470005C	01/19/1996
6	LOUISIANA	RUSTON, CITY OF	2203470006C	01/19/1996
6	LOUISIANA	SCOTT, CITY OF	22055C0000	01/19/1996
6	LOUISIANA	SCOTT, CITY OF	22055C0020G	01/19/1996
6	LOUISIANA	SCOTT, CITY OF	22055C0025G	01/19/1996
6	LOUISIANA	SCOTT, CITY OF	22055C0040G	01/19/1996
6	LOUISIANA	SCOTT, CITY OF	22055C0045G	01/19/1996
6	LOUISIANA	ST. MARY PARISH*	2201920000	06/18/1996
6	LOUISIANA	ST. MARY PARISH*	2201920150D	06/18/1996
6	LOUISIANA	ST. MARY PARISH*	2201920175E	06/18/1996
6	LOUISIANA	ST. MARY PARISH*	2201920250D	06/18/1996
6	LOUISIANA	YOUNGSVILLE, TOWN OF	22055C0000	01/19/1996
6	LOUISIANA	YOUNGSVILLE, VILLAGE OF	22055C0000	01/19/1996
6	LOUISIANA	YOUNGSVILLE, VILLAGE OF	22055C0065G	01/19/1996

MAP REVISIONS—Continued

Region	State	Community	Panel number	Effective date
6	LOUISIANA	YOUNGSVILLE, VILLAGE OF	22055C0070G	01/19/1996
6	LOUISIANA	YOUNGSVILLE, VILLAGE OF	22055C0075G	01/19/1996
6	LOUISIANA	YOUNGSVILLE, VILLAGE OF	22055C0080G	01/19/1996
6	NEW MEXICO	CARLSBAD, CITY OF	3500170000	04/03/1996
6	NEW MEXICO	CARLSBAD, CITY OF	3500170003C	04/03/1996
6	NEW MEXICO	CARLSBAD, CITY OF	3500170004C	04/03/1996
6	NEW MEXICO	CARLSBAD, CITY OF	3500170005C	04/03/1996
6	NEW MEXICO	CARLSBAD, CITY OF	3500170010C	04/03/1996
6	NEW MEXICO	CARLSBAD, CITY OF	3500170011C	04/03/1996
6	NEW MEXICO	CARLSBAD, CITY OF	3500170012C	04/03/1996
6	NEW MEXICO	CARLSBAD, CITY OF	3500170013C	04/03/1996
6	NEW MEXICO	EDDY COUNTY*	3501200000	06/04/1996
6	NEW MEXICO	EDDY COUNTY*	3501200585C	06/04/1996
6	NEW MEXICO	EDDY COUNTY*	3501200595C	06/04/1996
6	NEW MEXICO	EDDY COUNTY*	3501200605C	06/04/1996
6	NEW MEXICO	EDDY COUNTY*	3501200615C	06/04/1996
6	NEW MEXICO	EDDY COUNTY*	3501200625C	06/04/1996
6	OKLAHOMA	CRAIG COUNTY*	4005400000	04/17/1996
6	OKLAHOMA	CRAIG COUNTY*	4005400025A	04/17/1996
6	OKLAHOMA	CRAIG COUNTY*	4005400050A	04/17/1996
6	OKLAHOMA	CRAIG COUNTY*	4005400075A	04/17/1996
6	OKLAHOMA	CRAIG COUNTY*	4005400100A	04/17/1996
6	OKLAHOMA	CRAIG COUNTY*	4005400125A	04/17/1996
6	OKLAHOMA	CRAIG COUNTY*	4005400150A	04/17/1996
6	OKLAHOMA	CRAIG COUNTY*	4005400175A	04/17/1996
6	OKLAHOMA	CRAIG COUNTY*	4005400200A	04/17/1996
6	OKLAHOMA	NOBLE COUNTY	4001320000	06/18/1996
6	OKLAHOMA	NOBLE COUNTY	4001320135B	06/18/1996
6	OKLAHOMA	NOBLE COUNTY	4001320145B	06/18/1996
6	OKLAHOMA	NOBLE COUNTY	4001320150B	06/18/1996
6	OKLAHOMA	PAULS VALLEY, CITY OF	4002460000	05/06/1996
6	OKLAHOMA	PAULS VALLEY, CITY OF	4002460005C	05/06/1996
6	OKLAHOMA	PAULS VALLEY, CITY OF	4002460010C	05/06/1996
6	OKLAHOMA	PERRY, CITY OF	4001340001C	06/18/1996
6	OKLAHOMA	STILWATER, CITY OF	4053800000	05/06/1996
6	OKLAHOMA	STILWATER, CITY OF	4053800001D	05/06/1996
6	OKLAHOMA	STILWATER, CITY OF	4053800002D	05/06/1996
6	OKLAHOMA	STILWATER, CITY OF	4053800003D	05/06/1996
6	OKLAHOMA	STILWATER, CITY OF	4053800004D	05/06/1996
6	OKLAHOMA	STILWATER, CITY OF	4053800005D	05/06/1996
6	TEXAS	ALAMO HEIGHTS, CITY OF	48029C0000	02/16/1996
6	TEXAS	ALAMO HEIGHTS, CITY OF	48029C0451E	02/16/1996
6	TEXAS	ALAMO HEIGHTS, CITY OF	48029C0452E	02/16/1996
6	TEXAS	ALAMO HEIGHTS, CITY OF	48029C0453E	02/16/1996
6	TEXAS	ALAMO HEIGHTS, CITY OF	48029C0454E	02/16/1996
6	TEXAS	ALLEN, CITY OF	48085C0000	01/19/1996
6	TEXAS	ALLEN, CITY OF	48085C0290G	01/19/1996
6	TEXAS	ALLEN, CITY OF	48085C0295G	01/19/1996
6	TEXAS	ALLEN, CITY OF	48085C0315G	01/19/1996
6	TEXAS	ALLEN, CITY OF	48085C0430G	01/19/1996
6	TEXAS	ALLEN, CITY OF	48085C0435G	01/19/1996
6	TEXAS	ALLEN, CITY OF	48085C0455G	01/19/1996
6	TEXAS	ALTOGA, CITY OF	48085C0000	01/19/1996
6	TEXAS	ANNA, CITY OF	48085C0000	01/19/1996
6	TEXAS	BALCONES HEIGHTS, CITY OF	48029C0000	02/16/1996
6	TEXAS	BALCONES HEIGHTS, CITY OF	48029C0268E	02/16/1996
6	TEXAS	BALCONES HEIGHTS, CITY OF	48029C0431E	02/16/1996
6	TEXAS	BEXAR COUNTY*	48029C0000	02/16/1996
6	TEXAS	BEXAR COUNTY*	48029C0020E	02/16/1996
6	TEXAS	BEXAR COUNTY*	48029C0040E	02/16/1996
6	TEXAS	BEXAR COUNTY*	48029C0045E	02/16/1996
6	TEXAS	BEXAR COUNTY*	48029C0060E	02/16/1996
6	TEXAS	BEXAR COUNTY*	48029C0070E	02/16/1996
6	TEXAS	BEXAR COUNTY*	48029C0080E	02/16/1996
6	TEXAS	BEXAR COUNTY*	48029C0085E	02/16/1996
6	TEXAS	BEXAR COUNTY*	48029C0090E	02/16/1996
6	TEXAS	BEXAR COUNTY*	48029C0095E	02/16/1996
6	TEXAS	BEXAR COUNTY*	48029C0105E	02/16/1996
6	TEXAS	BEXAR COUNTY*	48029C0110E	02/16/1996
6	TEXAS	BEXAR COUNTY*	48029C0115E	02/16/1996
6	TEXAS	BEXAR COUNTY*	48029C0120E	02/16/1996
6	TEXAS	BEXAR COUNTY*	48029C0130E	02/16/1996

MAP REVISIONS—Continued

Region	State	Community	Panel number	Effective date
6	TEXAS	BEXAR COUNTY*	48029C0135E	02/16/1996
6	TEXAS	BEXAR COUNTY*	48029C0140E	02/16/1996
6	TEXAS	BEXAR COUNTY*	48029C0145E	02/16/1996
6	TEXAS	BEXAR COUNTY*	48029C0155E	02/16/1996
6	TEXAS	BEXAR COUNTY*	48029C0165E	02/16/1996
6	TEXAS	BEXAR COUNTY*	48029C0210E	02/16/1996
6	TEXAS	BEXAR COUNTY*	48029C0220E	02/16/1996
6	TEXAS	BEXAR COUNTY*	48029C0227E	02/16/1996
6	TEXAS	BEXAR COUNTY*	48029C0230E	02/16/1996
6	TEXAS	BEXAR COUNTY*	48029C0231E	02/16/1996
6	TEXAS	BEXAR COUNTY*	48029C0232E	02/16/1996
6	TEXAS	BEXAR COUNTY*	48029C0233E	02/16/1996
6	TEXAS	BEXAR COUNTY*	48029C0234E	02/16/1996
6	TEXAS	BEXAR COUNTY*	48029C0240E	02/16/1996
6	TEXAS	BEXAR COUNTY*	48029C0241E	02/16/1996
6	TEXAS	BEXAR COUNTY*	48029C0242E	02/16/1996
6	TEXAS	BEXAR COUNTY*	48029C0243E	02/16/1996
6	TEXAS	BEXAR COUNTY*	48029C0251E	02/16/1996
6	TEXAS	BEXAR COUNTY*	48029C0252E	02/16/1996
6	TEXAS	BEXAR COUNTY*	48029C0254E	02/16/1996
6	TEXAS	BEXAR COUNTY*	48029C0256E	02/16/1996
6	TEXAS	BEXAR COUNTY*	48029C0257E	02/16/1996
6	TEXAS	BEXAR COUNTY*	48029C0258E	02/16/1996
6	TEXAS	BEXAR COUNTY*	48029C0276E	02/16/1996
6	TEXAS	BEXAR COUNTY*	48029C0277E	02/16/1996
6	TEXAS	BEXAR COUNTY*	48029C0281E	02/16/1996
6	TEXAS	BEXAR COUNTY*	48029C0282E	02/16/1996
6	TEXAS	BEXAR COUNTY*	48029C0283E	02/16/1996
6	TEXAS	BEXAR COUNTY*	48029C0284E	02/16/1996
6	TEXAS	BEXAR COUNTY*	48029C0301E	02/16/1996
6	TEXAS	BEXAR COUNTY*	48029C0302E	02/16/1996
6	TEXAS	BEXAR COUNTY*	48029C0303E	02/16/1996
6	TEXAS	BEXAR COUNTY*	48029C0311E	02/16/1996
6	TEXAS	BEXAR COUNTY*	48029C0312E	02/16/1996
6	TEXAS	BEXAR COUNTY*	48029C0313E	02/16/1996
6	TEXAS	BEXAR COUNTY*	48029C0314E	02/16/1996
6	TEXAS	BEXAR COUNTY*	48029C0316E	02/16/1996
6	TEXAS	BEXAR COUNTY*	48029C0317E	02/16/1996
6	TEXAS	BEXAR COUNTY*	48029C0318E	02/16/1996
6	TEXAS	BEXAR COUNTY*	48029C0340E	02/16/1996
6	TEXAS	BEXAR COUNTY*	48029C0345E	02/16/1996
6	TEXAS	BEXAR COUNTY*	48029C0385E	02/16/1996
6	TEXAS	BEXAR COUNTY*	48029C0395E	02/16/1996
6	TEXAS	BEXAR COUNTY*	48029C0405E	02/16/1996
6	TEXAS	BEXAR COUNTY*	48029C0406E	02/16/1996
6	TEXAS	BEXAR COUNTY*	48029C0407E	02/16/1996
6	TEXAS	BEXAR COUNTY*	48029C0408E	02/16/1996
6	TEXAS	BEXAR COUNTY*	48029C0409E	02/16/1996
6	TEXAS	BEXAR COUNTY*	48029C0415E	02/16/1996
6	TEXAS	BEXAR COUNTY*	48029C0416E	02/16/1996
6	TEXAS	BEXAR COUNTY*	48029C0417E	02/16/1996
6	TEXAS	BEXAR COUNTY*	48029C0418E	02/16/1996
6	TEXAS	BEXAR COUNTY*	48029C0419E	02/16/1996
6	TEXAS	BEXAR COUNTY*	48029C0437E	02/16/1996
6	TEXAS	BEXAR COUNTY*	48029C0438E	02/16/1996
6	TEXAS	BEXAR COUNTY*	48029C0439E	02/16/1996
6	TEXAS	BEXAR COUNTY*	48029C0452E	02/16/1996
6	TEXAS	BEXAR COUNTY*	48029C0453E	02/16/1996
6	TEXAS	BEXAR COUNTY*	48029C0454E	02/16/1996
6	TEXAS	BEXAR COUNTY*	48029C0456E	02/16/1996
6	TEXAS	BEXAR COUNTY*	48029C0457E	02/16/1996
6	TEXAS	BEXAR COUNTY*	48029C0458E	02/16/1996
6	TEXAS	BEXAR COUNTY*	48029C0459E	02/16/1996
6	TEXAS	BEXAR COUNTY*	48029C0470E	02/16/1996
6	TEXAS	BEXAR COUNTY*	48029C0476E	02/16/1996
6	TEXAS	BEXAR COUNTY*	48029C0477E	02/16/1996
6	TEXAS	BEXAR COUNTY*	48029C0478E	02/16/1996
6	TEXAS	BEXAR COUNTY*	48029C0479E	02/16/1996
6	TEXAS	BEXAR COUNTY*	48029C0481E	02/16/1996
6	TEXAS	BEXAR COUNTY*	48029C0482E	02/16/1996
6	TEXAS	BEXAR COUNTY*	48029C0483E	02/16/1996
6	TEXAS	BEXAR COUNTY*	48029C0484E	02/16/1996

MAP REVISIONS—Continued

Region	State	Community	Panel number	Effective date
6	TEXAS	BEXAR COUNTY*	48029C0490E	02/16/1996
6	TEXAS	BEXAR COUNTY*	48029C0495E	02/16/1996
6	TEXAS	BEXAR COUNTY*	48029C0505E	02/16/1996
6	TEXAS	BEXAR COUNTY*	48029C0510E	02/16/1996
6	TEXAS	BEXAR COUNTY*	48029C0515E	02/16/1996
6	TEXAS	BEXAR COUNTY*	48029C0530E	02/16/1996
6	TEXAS	BEXAR COUNTY*	48029C0560E	02/16/1996
6	TEXAS	BEXAR COUNTY*	48029C0570E	02/16/1996
6	TEXAS	BEXAR COUNTY*	48029C0580E	02/16/1996
6	TEXAS	BEXAR COUNTY*	48029C0581E	02/16/1996
6	TEXAS	BEXAR COUNTY*	48029C0582E	02/16/1996
6	TEXAS	BEXAR COUNTY*	48029C0583E	02/16/1996
6	TEXAS	BEXAR COUNTY*	48029C0584E	02/16/1996
6	TEXAS	BEXAR COUNTY*	48029C0590E	02/16/1996
6	TEXAS	BEXAR COUNTY*	48029C0595E	02/16/1996
6	TEXAS	BEXAR COUNTY*	48029C0601E	02/16/1996
6	TEXAS	BEXAR COUNTY*	48029C0602E	02/16/1996
6	TEXAS	BEXAR COUNTY*	48029C0603E	02/16/1996
6	TEXAS	BEXAR COUNTY*	48029C0604E	02/16/1996
6	TEXAS	BEXAR COUNTY*	48029C0606E	02/16/1996
6	TEXAS	BEXAR COUNTY*	48029C0609E	02/16/1996
6	TEXAS	BEXAR COUNTY*	48029C0615E	02/16/1996
6	TEXAS	BEXAR COUNTY*	48029C0620E	02/16/1996
6	TEXAS	BEXAR COUNTY*	48029C0626E	02/16/1996
6	TEXAS	BEXAR COUNTY*	48029C0627E	02/16/1996
6	TEXAS	BEXAR COUNTY*	48029C0628E	02/16/1996
6	TEXAS	BEXAR COUNTY*	48029C0629E	02/16/1996
6	TEXAS	BEXAR COUNTY*	48029C0631E	02/16/1996
6	TEXAS	BEXAR COUNTY*	48029C0632E	02/16/1996
6	TEXAS	BEXAR COUNTY*	48029C0633E	02/16/1996
6	TEXAS	BEXAR COUNTY*	48029C0634E	02/16/1996
6	TEXAS	BEXAR COUNTY*	48029C0636E	02/16/1996
6	TEXAS	BEXAR COUNTY*	48029C0637E	02/16/1996
6	TEXAS	BEXAR COUNTY*	48029C0640E	02/16/1996
6	TEXAS	BEXAR COUNTY*	48029C0641E	02/16/1996
6	TEXAS	BEXAR COUNTY*	48029C0642E	02/16/1996
6	TEXAS	BEXAR COUNTY*	48029C0645E	02/16/1996
6	TEXAS	BEXAR COUNTY*	48029C0664E	02/16/1996
6	TEXAS	BEXAR COUNTY*	48029C0665E	02/16/1996
6	TEXAS	BEXAR COUNTY*	48029C0675E	02/16/1996
6	TEXAS	BEXAR COUNTY*	48029C0680E	02/16/1996
6	TEXAS	BEXAR COUNTY*	48029C0735E	02/16/1996
6	TEXAS	BEXAR COUNTY*	48029C0755E	02/16/1996
6	TEXAS	BEXAR COUNTY*	48029C0760E	02/16/1996
6	TEXAS	BEXAR COUNTY*	48029C0780E	02/16/1996
6	TEXAS	BEXAR COUNTY*	48029C0785E	02/16/1996
6	TEXAS	BEXAR COUNTY*	48029C0800E	02/16/1996
6	TEXAS	BEXAR COUNTY*	48029C0805E	02/16/1996
6	TEXAS	BEXAR COUNTY*	48029C0810E	02/16/1996
6	TEXAS	BEXAR COUNTY*	48029C0825E	02/16/1996
6	TEXAS	BEXAR COUNTY*	48029C0830E	02/16/1996
6	TEXAS	BEXAR COUNTY*	48029C0850E	02/16/1996
6	TEXAS	BEXAR COUNTY*	48029C0900E	02/16/1996
6	TEXAS	BLUE RIDGE, TOWN OF	48085C0000	01/19/1996
6	TEXAS	BLUE RIDGE, TOWN OF	48085C0200G	01/19/1996
6	TEXAS	BORGER, CITY OF	4803740000	02/02/1996
6	TEXAS	BORGER, CITY OF	4803740005C	02/02/1996
6	TEXAS	BORGER, CITY OF	4803740010C	02/02/1996
6	TEXAS	BRANCH, CITY OF	48085C0000	01/19/1996
6	TEXAS	CARROLLTON, CITY OF	4801670000	06/04/1996
6	TEXAS	CARROLLTON, CITY OF	4801670005G	06/04/1996
6	TEXAS	CARROLLTON, CITY OF	4801670015F	06/04/1996
6	TEXAS	CASTLE HILLS, CITY OF	48029C0000	02/16/1996
6	TEXAS	CASTLE HILLS, CITY OF	48029C0266E	02/16/1996
6	TEXAS	CASTLE HILLS, CITY OF	48029C0267E	02/16/1996
6	TEXAS	CASTLE HILLS, CITY OF	48029C0268E	02/16/1996
6	TEXAS	CASTLE HILLS, CITY OF	48029C0269E	02/16/1996
6	TEXAS	CELINA, CITY OF	48085C0000	01/19/1996
6	TEXAS	CELINA, CITY OF	48085C0025G	01/19/1996
6	TEXAS	CELINA, CITY OF	48085C0110G	01/19/1996
6	TEXAS	CELINA, CITY OF	48085C0125G	01/19/1996
6	TEXAS	CELINA, CITY OF	48085C0150G	01/19/1996

MAP REVISIONS—Continued

Region	State	Community	Panel number	Effective date
6	TEXAS	CHINA GROVE, CITY OF	48029C0000	02/16/1996
6	TEXAS	CHINA GROVE, CITY OF	48029C0490E	02/16/1996
6	TEXAS	COLLIN COUNTY*	48085C0000	01/19/1996
6	TEXAS	COLLIN COUNTY*	48085C0025G	01/19/1996
6	TEXAS	COLLIN COUNTY*	48085C0050G	01/19/1996
6	TEXAS	COLLIN COUNTY*	48085C0075G	01/19/1996
6	TEXAS	COLLIN COUNTY*	48085C0100G	01/19/1996
6	TEXAS	COLLIN COUNTY*	48085C0110G	01/19/1996
6	TEXAS	COLLIN COUNTY*	48085C0125G	01/19/1996
6	TEXAS	COLLIN COUNTY*	48085C0150G	01/19/1996
6	TEXAS	COLLIN COUNTY*	48085C0175G	01/19/1996
6	TEXAS	COLLIN COUNTY*	48085C0200G	01/19/1996
6	TEXAS	COLLIN COUNTY*	48085C0225G	01/19/1996
6	TEXAS	COLLIN COUNTY*	48085C0255G	01/19/1996
6	TEXAS	COLLIN COUNTY*	48085C0260G	01/19/1996
6	TEXAS	COLLIN COUNTY*	48085C0265G	01/19/1996
6	TEXAS	COLLIN COUNTY*	48085C0270G	01/19/1996
6	TEXAS	COLLIN COUNTY*	48085C0280G	01/19/1996
6	TEXAS	COLLIN COUNTY*	48085C0285G	01/19/1996
6	TEXAS	COLLIN COUNTY*	48085C0290G	01/19/1996
6	TEXAS	COLLIN COUNTY*	48085C0295G	01/19/1996
6	TEXAS	COLLIN COUNTY*	48085C0305G	01/19/1996
6	TEXAS	COLLIN COUNTY*	48085C0315G	01/19/1996
6	TEXAS	COLLIN COUNTY*	48085C0325G	01/19/1996
6	TEXAS	COLLIN COUNTY*	48085C0350G	01/19/1996
6	TEXAS	COLLIN COUNTY*	48085C0375G	01/19/1996
6	TEXAS	COLLIN COUNTY*	48085C0405G	01/19/1996
6	TEXAS	COLLIN COUNTY*	48085C0410G	01/19/1996
6	TEXAS	COLLIN COUNTY*	48085C0415G	01/19/1996
6	TEXAS	COLLIN COUNTY*	48085C0420G	01/19/1996
6	TEXAS	COLLIN COUNTY*	48085C0430G	01/19/1996
6	TEXAS	COLLIN COUNTY*	48085C0435G	01/19/1996
6	TEXAS	COLLIN COUNTY*	48085C0440G	01/19/1996
6	TEXAS	COLLIN COUNTY*	48085C0445G	01/19/1996
6	TEXAS	COLLIN COUNTY*	48085C0455G	01/19/1996
6	TEXAS	COLLIN COUNTY*	48085C0460G	01/19/1996
6	TEXAS	COLLIN COUNTY*	48085C0465G	01/19/1996
6	TEXAS	COLLIN COUNTY*	48085C0470G	01/19/1996
6	TEXAS	COLLIN COUNTY*	48085C0500G	01/19/1996
6	TEXAS	COLLIN COUNTY*	48085C0505G	01/19/1996
6	TEXAS	COLLIN COUNTY*	48085C0510G	01/19/1996
6	TEXAS	COLLIN COUNTY*	48085C0515G	01/19/1996
6	TEXAS	COLLIN COUNTY*	48085C0520G	01/19/1996
6	TEXAS	COLLIN COUNTY*	48085C0580G	01/19/1996
6	TEXAS	COLLIN COUNTY*	48085C0585G	01/19/1996
6	TEXAS	COLLIN COUNTY*	48085C0605G	01/19/1996
6	TEXAS	COLLIN COUNTY*	48085C0610G	01/19/1996
6	TEXAS	COLLIN COUNTY*	48085C0650G	01/19/1996
6	TEXAS	CONVERSE, CITY OF	48029C0000	02/16/1996
6	TEXAS	CONVERSE, CITY OF	48029C0312E	02/16/1996
6	TEXAS	CONVERSE, CITY OF	48029C0314E	02/16/1996
6	TEXAS	CONVERSE, CITY OF	48029C0316E	02/16/1996
6	TEXAS	CONVERSE, CITY OF	48029C0318E	02/16/1996
6	TEXAS	CONVERSE, CITY OF	48029C0477E	02/16/1996
6	TEXAS	CONVERSE, CITY OF	48029C0481E	02/16/1996
6	TEXAS	ELMENDORF, CITY OF	48029C0000	02/16/1996
6	TEXAS	ELMENDORF, CITY OF	48029C0664E	02/16/1996
6	TEXAS	ELMENDORF, CITY OF	48029C0665E	02/16/1996
6	TEXAS	ELMENDORF, CITY OF	48029C0675E	02/16/1996
6	TEXAS	ELMENDORF, CITY OF	48029C0830E	02/16/1996
6	TEXAS	FAIR OAKS RANCH, CITY OF	48029C0000	02/16/1996
6	TEXAS	FAIR OAKS RANCH, CITY OF	48029C0020E	02/16/1996
6	TEXAS	FAIR OAKS RANCH, CITY OF	48029C0040E	02/16/1996
6	TEXAS	FAIR OAKS RANCH, CITY OF	48029C0085E	02/16/1996
6	TEXAS	FAIR OAKS RANCH, CITY OF	48029C0105E	02/16/1996
6	TEXAS	FAIRVIEW, TOWN OF	48085C0000	01/19/1996
6	TEXAS	FAIRVIEW, TOWN OF	48085C0295G	01/19/1996
6	TEXAS	FAIRVIEW, TOWN OF	48085C0315G	01/19/1996
6	TEXAS	FAIRVIEW, TOWN OF	48085C0455G	01/19/1996
6	TEXAS	FARMERSVILLE, CITY OF	48085C0000	01/19/1996
6	TEXAS	FARMERSVILLE, CITY OF	48085C0350G	01/19/1996
6	TEXAS	FARMERSVILLE, CITY OF	48085C0375G	01/19/1996

MAP REVISIONS—Continued

Region	State	Community	Panel number	Effective date
6	TEXAS	FARMERSVILLE, CITY OF	48085C0500G	01/19/1996
6	TEXAS	FARMERSVILLE, CITY OF—USE CID #48162	48085C0000	01/19/1996
6	TEXAS	FRISCO, CITY OF	48085C0000	01/19/1996
6	TEXAS	FRISCO, CITY OF	48085C0235G	01/19/1996
6	TEXAS	FRISCO, CITY OF	48085C0245G	01/19/1996
6	TEXAS	FRISCO, CITY OF	48085C0255G	01/19/1996
6	TEXAS	FRISCO, CITY OF	48085C0260G	01/19/1996
6	TEXAS	FRISCO, CITY OF	48085C0265G	01/19/1996
6	TEXAS	FRISCO, CITY OF	48085C0270G	01/19/1996
6	TEXAS	FRISCO, CITY OF	48085C0280G	01/19/1996
6	TEXAS	FRISCO, CITY OF	48085C0290G	01/19/1996
6	TEXAS	FRISCO, CITY OF	48085C0385G	01/19/1996
6	TEXAS	FRISCO, CITY OF	48085C0405G	01/19/1996
6	TEXAS	FRISCO, CITY OF	48085C0410G	01/19/1996
6	TEXAS	FRISCO, CITY OF	48085C0430G	01/19/1996
6	TEXAS	GARLAND, CITY OF	48085C0000	01/19/1996
6	TEXAS	GREY FOREST, CITY OF	48029C0000	02/16/1996
6	TEXAS	GREY FOREST, CITY OF	48029C0095E	02/16/1996
6	TEXAS	GREY FOREST, CITY OF	48029C0227E	02/16/1996
6	TEXAS	GREY FOREST, CITY OF	48029C0231E	02/16/1996
6	TEXAS	HARDIN COUNTY*	48199C0000	04/17/1996
6	TEXAS	HARDIN COUNTY*	48199C0200E	04/17/1996
6	TEXAS	HELOTES, CITY OF	48029C0000	02/16/1996
6	TEXAS	HELOTES, CITY OF	48029C0230E	02/16/1996
6	TEXAS	HELOTES, CITY OF	48029C0233E	02/16/1996
6	TEXAS	HELOTES, CITY OF	48029C0240E	02/16/1996
6	TEXAS	HELOTES, CITY OF	48029C0241E	02/16/1996
6	TEXAS	HILL COUNTRY VILLAGE, TOWN OF	48029C0000	02/16/1996
6	TEXAS	HILL COUNTRY VILLAGE, TOWN OF	48029C0257E	02/16/1996
6	TEXAS	HILL COUNTRY VILLAGE, TOWN OF	48029C0259E	02/16/1996
6	TEXAS	HILL COUNTRY VILLAGE, TOWN OF	48029C0276E	02/16/1996
6	TEXAS	HILL COUNTRY VILLAGE, TOWN OF	48029C0278E	02/16/1996
6	TEXAS	HOLLYWOOD PARK, TOWN OF	48029C0000	02/16/1996
6	TEXAS	HOLLYWOOD PARK, TOWN OF	48029C0257E	02/16/1996
6	TEXAS	HOLLYWOOD PARK, TOWN OF	48029C0276E	02/16/1996
6	TEXAS	HOLLYWOOD PARK, TOWN OF	48029C0278E	02/16/1996
6	TEXAS	JOSEPHINE, CITY OF	48085C0000	01/19/1996
6	TEXAS	JOSEPHINE, CITY OF	48085C0505G	01/19/1996
6	TEXAS	JOSEPHINE, CITY OF	48085C0510G	01/19/1996
6	TEXAS	JOSEPHINE, CITY OF	48085C0515G	01/19/1996
6	TEXAS	JOSEPHINE, CITY OF	48085C0520G	01/19/1996
6	TEXAS	KIRBY, CITY OF	48029C0000	02/16/1996
6	TEXAS	KIRBY, CITY OF	48029C0457E	02/16/1996
6	TEXAS	KIRBY, CITY OF	48029C0459E	02/16/1996
6	TEXAS	KIRBY, CITY OF	48029C0476E	02/16/1996
6	TEXAS	KIRBY, CITY OF	48029C0478E	02/16/1996
6	TEXAS	KOUNTZE, CITY OF	48199C0000	04/17/1996
6	TEXAS	LAVON, TOWN OF	48085C0000	01/19/1996
6	TEXAS	LAVON, TOWN OF	48085C0500G	01/19/1996
6	TEXAS	LEON VALLEY, CITY OF	48029C0000	02/16/1996
6	TEXAS	LEON VALLEY, CITY OF	48029C0244E	02/16/1996
6	TEXAS	LEON VALLEY, CITY OF	48029C0263E	02/16/1996
6	TEXAS	LEON VALLEY, CITY OF	48029C0407E	02/16/1996
6	TEXAS	LEON VALLEY, CITY OF	48029C0426E	02/16/1996
6	TEXAS	LEON VALLEY, CITY OF	48029C0427E	02/16/1996
6	TEXAS	LIVE OAK, CITY OF	48029C0000	02/16/1996
6	TEXAS	LIVE OAK, CITY OF	48029C0303E	02/16/1996
6	TEXAS	LIVE OAK, CITY OF	48029C0304E	02/16/1996
6	TEXAS	LIVE OAK, CITY OF	48029C0311E	02/16/1996
6	TEXAS	LIVE OAK, CITY OF	48029C0312E	02/16/1996
6	TEXAS	LIVE OAK, CITY OF	48029C0313E	02/16/1996
6	TEXAS	LOWRY CROSSING, CITY OF	48085C0000	01/19/1996
6	TEXAS	LOWRY CROSSING, CITY OF	48085C0315G	01/19/1996
6	TEXAS	LOWRY CROSSING, CITY OF	48085C0325G	01/19/1996
6	TEXAS	LUBBOCK, CITY OF	4804520000	06/18/1996
6	TEXAS	LUBBOCK, CITY OF	4804520025C	06/18/1996
6	TEXAS	LUCAS, CITY OF	48085C0000	01/19/1996
6	TEXAS	LUCAS, CITY OF	48085C0315G	01/19/1996
6	TEXAS	LUCAS, CITY OF	48085C0325G	01/19/1996
6	TEXAS	LUCAS, CITY OF	48085C0455G	01/19/1996
6	TEXAS	LUCAS, CITY OF	48085C0460G	01/19/1996
6	TEXAS	LUCAS, CITY OF	48085C0465G	01/19/1996

MAP REVISIONS—Continued

Region	State	Community	Panel number	Effective date
6	TEXAS	LUCAS, CITY OF	48085C0470G	01/19/1996
6	TEXAS	LUMBERTON, CITY OF	48199C0000	04/17/1996
6	TEXAS	LYTLE, CITY OF	48029C0000	02/16/1996
6	TEXAS	MCKINNEY, CITY OF	48085C0000	01/19/1996
6	TEXAS	MCKINNEY, CITY OF	48085C0150G	01/19/1996
6	TEXAS	MCKINNEY, CITY OF	48085C0175G	01/19/1996
6	TEXAS	MCKINNEY, CITY OF	48085C0260G	01/19/1996
6	TEXAS	MCKINNEY, CITY OF	48085C0270G	01/19/1996
6	TEXAS	MCKINNEY, CITY OF	48085C0280G	01/19/1996
6	TEXAS	MCKINNEY, CITY OF	48085C0285G	01/19/1996
6	TEXAS	MCKINNEY, CITY OF	48085C0290G	01/19/1996
6	TEXAS	MCKINNEY, CITY OF	48085C0295G	01/19/1996
6	TEXAS	MCKINNEY, CITY OF	48085C0305G	01/19/1996
6	TEXAS	MCKINNEY, CITY OF	48085C0315G	01/19/1996
6	TEXAS	MELISSA, CITY OF	48085C0000	01/19/1996
6	TEXAS	MELISSA, CITY OF	48085C0175G	01/19/1996
6	TEXAS	MURPHY, CITY OF	48085C0000	01/19/1996
6	TEXAS	MURPHY, CITY OF	48085C0445G	01/19/1996
6	TEXAS	MURPHY, CITY OF	48085C0465G	01/19/1996
6	TEXAS	MURPHY, CITY OF	48085C0580G	01/19/1996
6	TEXAS	NEVADA, CITY OF	48085C0000	01/19/1996
6	TEXAS	NEVADA, CITY OF	48085C0500G	01/19/1996
6	TEXAS	NEVADA, CITY OF	48085C0505G	01/19/1996
6	TEXAS	NEVADA, CITY OF	48085C0515G	01/19/1996
6	TEXAS	NEW HOPE, CITY OF	48085C0000	01/19/1996
6	TEXAS	NEW HOPE, CITY OF	48085C0305G	01/19/1996
6	TEXAS	NEW HOPE, CITY OF	48085C0325G	01/19/1996
6	TEXAS	OLMOS PARK, CITY OF	48029C0000	02/16/1996
6	TEXAS	OLMOS PARK, CITY OF	48029C0451E	02/16/1996
6	TEXAS	OLMOS PARK, CITY OF	48029C0453E	02/16/1996
6	TEXAS	PARKER, CITY OF	48085C0000	01/19/1996
6	TEXAS	PARKER, CITY OF	48085C0435G	01/19/1996
6	TEXAS	PARKER, CITY OF	48085C0445G	01/19/1996
6	TEXAS	PARKER, CITY OF	48085C0455G	01/19/1996
6	TEXAS	PARKER, CITY OF	48085C0465G	01/19/1996
6	TEXAS	PLANO, CITY OF	48085C0000	01/19/1996
6	TEXAS	PLANO, CITY OF	48085C0405G	01/19/1996
6	TEXAS	PLANO, CITY OF	48085C0410G	01/19/1996
6	TEXAS	PLANO, CITY OF	48085C0415G	01/19/1996
6	TEXAS	PLANO, CITY OF	48085C0420G	01/19/1996
6	TEXAS	PLANO, CITY OF	48085C0430G	01/19/1996
6	TEXAS	PLANO, CITY OF	48085C0435G	01/19/1996
6	TEXAS	PLANO, CITY OF	48085C0440G	01/19/1996
6	TEXAS	PLANO, CITY OF	48085C0445G	01/19/1996
6	TEXAS	PLANO, CITY OF	48085C0465G	01/19/1996
6	TEXAS	PRINCETON, CITY OF	48085C0000	01/19/1996
6	TEXAS	PRINCETON, CITY OF	48085C0325G	01/19/1996
6	TEXAS	PRINCETON, CITY OF	48085C0350G	01/19/1996
6	TEXAS	PROSPER, TOWN OF	48085C0000	01/19/1996
6	TEXAS	PROSPER, TOWN OF	48085C0255G	01/19/1996
6	TEXAS	PROSPER, TOWN OF	48085C0260G	01/19/1996
6	TEXAS	RENNER, CITY OF	48085C0000	01/19/1996
6	TEXAS	RICHARDSON, CITY OF	48085C0000	01/19/1996
6	TEXAS	ROSE HILL ACRES, CITY OF	48199C0000	04/17/1996
6	TEXAS	ROYSE CITY, CITY OF	48085C0000	01/19/1996
6	TEXAS	SAN ANTONIO, CITY OF	48029C0000	02/16/1996
6	TEXAS	SAN ANTONIO, CITY OF	48029C0085E	02/16/1996
6	TEXAS	SAN ANTONIO, CITY OF	48029C0095E	02/16/1996
6	TEXAS	SAN ANTONIO, CITY OF	48029C0105E	02/16/1996
6	TEXAS	SAN ANTONIO, CITY OF	48029C0115E	02/16/1996
6	TEXAS	SAN ANTONIO, CITY OF	48029C0140E	02/16/1996
6	TEXAS	SAN ANTONIO, CITY OF	48029C0145E	02/16/1996
6	TEXAS	SAN ANTONIO, CITY OF	48029C0220E	02/16/1996
6	TEXAS	SAN ANTONIO, CITY OF	48029C0232E	02/16/1996
6	TEXAS	SAN ANTONIO, CITY OF	48029C0233E	02/16/1996
6	TEXAS	SAN ANTONIO, CITY OF	48029C0234E	02/16/1996
6	TEXAS	SAN ANTONIO, CITY OF	48029C0240E	02/16/1996
6	TEXAS	SAN ANTONIO, CITY OF	48029C0241E	02/16/1996
6	TEXAS	SAN ANTONIO, CITY OF	48029C0242E	02/16/1996
6	TEXAS	SAN ANTONIO, CITY OF	48029C0243E	02/16/1996
6	TEXAS	SAN ANTONIO, CITY OF	48029C0244E	02/16/1996
6	TEXAS	SAN ANTONIO, CITY OF	48029C0251E	02/16/1996

MAP REVISIONS—Continued

Region	State	Community	Panel number	Effective date
6	TEXAS	SAN ANTONIO, CITY OF	48029C0252E	02/16/1996
6	TEXAS	SAN ANTONIO, CITY OF	48029C0253E	02/16/1996
6	TEXAS	SAN ANTONIO, CITY OF	48029C0254E	02/16/1996
6	TEXAS	SAN ANTONIO, CITY OF	48029C0256E	02/16/1996
6	TEXAS	SAN ANTONIO, CITY OF	48029C0257E	02/16/1996
6	TEXAS	SAN ANTONIO, CITY OF	48029C0258E	02/16/1996
6	TEXAS	SAN ANTONIO, CITY OF	48029C0259E	02/16/1996
6	TEXAS	SAN ANTONIO, CITY OF	48029C0261E	02/16/1996
6	TEXAS	SAN ANTONIO, CITY OF	48029C0262E	02/16/1996
6	TEXAS	SAN ANTONIO, CITY OF	48029C0263E	02/16/1996
6	TEXAS	SAN ANTONIO, CITY OF	48029C0264E	02/16/1996
6	TEXAS	SAN ANTONIO, CITY OF	48029C0266E	02/16/1996
6	TEXAS	SAN ANTONIO, CITY OF	48029C0267E	02/16/1996
6	TEXAS	SAN ANTONIO, CITY OF	48029C0268E	02/16/1996
6	TEXAS	SAN ANTONIO, CITY OF	48029C0269E	02/16/1996
6	TEXAS	SAN ANTONIO, CITY OF	48029C0276E	02/16/1996
6	TEXAS	SAN ANTONIO, CITY OF	48029C0277E	02/16/1996
6	TEXAS	SAN ANTONIO, CITY OF	48029C0278E	02/16/1996
6	TEXAS	SAN ANTONIO, CITY OF	48029C0279E	02/16/1996
6	TEXAS	SAN ANTONIO, CITY OF	48029C0281E	02/16/1996
6	TEXAS	SAN ANTONIO, CITY OF	48029C0282E	02/16/1996
6	TEXAS	SAN ANTONIO, CITY OF	48029C0283E	02/16/1996
6	TEXAS	SAN ANTONIO, CITY OF	48029C0284E	02/16/1996
6	TEXAS	SAN ANTONIO, CITY OF	48029C0286E	02/16/1996
6	TEXAS	SAN ANTONIO, CITY OF	48029C0287E	02/16/1996
6	TEXAS	SAN ANTONIO, CITY OF	48029C0288E	02/16/1996
6	TEXAS	SAN ANTONIO, CITY OF	48029C0289E	02/16/1996
6	TEXAS	SAN ANTONIO, CITY OF	48029C0291E	02/16/1996
6	TEXAS	SAN ANTONIO, CITY OF	48029C0292E	02/16/1996
6	TEXAS	SAN ANTONIO, CITY OF	48029C0293E	02/16/1996
6	TEXAS	SAN ANTONIO, CITY OF	48029C0294E	02/16/1996
6	TEXAS	SAN ANTONIO, CITY OF	48029C0301E	02/16/1996
6	TEXAS	SAN ANTONIO, CITY OF	48029C0302E	02/16/1996
6	TEXAS	SAN ANTONIO, CITY OF	48029C0303E	02/16/1996
6	TEXAS	SAN ANTONIO, CITY OF	48029C0304E	02/16/1996
6	TEXAS	SAN ANTONIO, CITY OF	48029C0311E	02/16/1996
6	TEXAS	SAN ANTONIO, CITY OF	48029C0313E	02/16/1996
6	TEXAS	SAN ANTONIO, CITY OF	48029C0314E	02/16/1996
6	TEXAS	SAN ANTONIO, CITY OF	48029C0318E	02/16/1996
6	TEXAS	SAN ANTONIO, CITY OF	48029C0405E	02/16/1996
6	TEXAS	SAN ANTONIO, CITY OF	48029C0406E	02/16/1996
6	TEXAS	SAN ANTONIO, CITY OF	48029C0407E	02/16/1996
6	TEXAS	SAN ANTONIO, CITY OF	48029C0408E	02/16/1996
6	TEXAS	SAN ANTONIO, CITY OF	48029C0409E	02/16/1996
6	TEXAS	SAN ANTONIO, CITY OF	48029C0415E	02/16/1996
6	TEXAS	SAN ANTONIO, CITY OF	48029C0416E	02/16/1996
6	TEXAS	SAN ANTONIO, CITY OF	48029C0417E	02/16/1996
6	TEXAS	SAN ANTONIO, CITY OF	48029C0418E	02/16/1996
6	TEXAS	SAN ANTONIO, CITY OF	48029C0419E	02/16/1996
6	TEXAS	SAN ANTONIO, CITY OF	48029C0426E	02/16/1996
6	TEXAS	SAN ANTONIO, CITY OF	48029C0427E	02/16/1996
6	TEXAS	SAN ANTONIO, CITY OF	48029C0428E	02/16/1996
6	TEXAS	SAN ANTONIO, CITY OF	48029C0429E	02/16/1996
6	TEXAS	SAN ANTONIO, CITY OF	48029C0431E	02/16/1996
6	TEXAS	SAN ANTONIO, CITY OF	48029C0432E	02/16/1996
6	TEXAS	SAN ANTONIO, CITY OF	48029C0433E	02/16/1996
6	TEXAS	SAN ANTONIO, CITY OF	48029C0434E	02/16/1996
6	TEXAS	SAN ANTONIO, CITY OF	48029C0436E	02/16/1996
6	TEXAS	SAN ANTONIO, CITY OF	48029C0437E	02/16/1996
6	TEXAS	SAN ANTONIO, CITY OF	48029C0438E	02/16/1996
6	TEXAS	SAN ANTONIO, CITY OF	48029C0439E	02/16/1996
6	TEXAS	SAN ANTONIO, CITY OF	48029C0441E	02/16/1996
6	TEXAS	SAN ANTONIO, CITY OF	48029C0442E	02/16/1996
6	TEXAS	SAN ANTONIO, CITY OF	48029C0444E	02/16/1996
6	TEXAS	SAN ANTONIO, CITY OF	48029C0451E	02/16/1996
6	TEXAS	SAN ANTONIO, CITY OF	48029C0452E	02/16/1996
6	TEXAS	SAN ANTONIO, CITY OF	48029C0453E	02/16/1996
6	TEXAS	SAN ANTONIO, CITY OF	48029C0454E	02/16/1996
6	TEXAS	SAN ANTONIO, CITY OF	48029C0456E	02/16/1996
6	TEXAS	SAN ANTONIO, CITY OF	48029C0457E	02/16/1996
6	TEXAS	SAN ANTONIO, CITY OF	48029C0458E	02/16/1996
6	TEXAS	SAN ANTONIO, CITY OF	48029C0459E	02/16/1996

MAP REVISIONS—Continued

Region	State	Community	Panel number	Effective date
6	TEXAS	SAN ANTONIO, CITY OF	48029C0461E	02/16/1996
6	TEXAS	SAN ANTONIO, CITY OF	48029C0462E	02/16/1996
6	TEXAS	SAN ANTONIO, CITY OF	48029C0463E	02/16/1996
6	TEXAS	SAN ANTONIO, CITY OF	48029C0466E	02/16/1996
6	TEXAS	SAN ANTONIO, CITY OF	48029C0468E	02/16/1996
6	TEXAS	SAN ANTONIO, CITY OF	48029C0470E	02/16/1996
6	TEXAS	SAN ANTONIO, CITY OF	48029C0476E	02/16/1996
6	TEXAS	SAN ANTONIO, CITY OF	48029C0477E	02/16/1996
6	TEXAS	SAN ANTONIO, CITY OF	48029C0478E	02/16/1996
6	TEXAS	SAN ANTONIO, CITY OF	48029C0479E	02/16/1996
6	TEXAS	SAN ANTONIO, CITY OF	48029C0481E	02/16/1996
6	TEXAS	SAN ANTONIO, CITY OF	48029C0482E	02/16/1996
6	TEXAS	SAN ANTONIO, CITY OF	48029C0483E	02/16/1996
6	TEXAS	SAN ANTONIO, CITY OF	48029C0484E	02/16/1996
6	TEXAS	SAN ANTONIO, CITY OF	48029C0490E	02/16/1996
6	TEXAS	SAN ANTONIO, CITY OF	48029C0505E	02/16/1996
6	TEXAS	SAN ANTONIO, CITY OF	48029C0581E	02/16/1996
6	TEXAS	SAN ANTONIO, CITY OF	48029C0582E	02/16/1996
6	TEXAS	SAN ANTONIO, CITY OF	48029C0583E	02/16/1996
6	TEXAS	SAN ANTONIO, CITY OF	48029C0584E	02/16/1996
6	TEXAS	SAN ANTONIO, CITY OF	48029C0595E	02/16/1996
6	TEXAS	SAN ANTONIO, CITY OF	48029C0601E	02/16/1996
6	TEXAS	SAN ANTONIO, CITY OF	48029C0602E	02/16/1996
6	TEXAS	SAN ANTONIO, CITY OF	48029C0603E	02/16/1996
6	TEXAS	SAN ANTONIO, CITY OF	48029C0604E	02/16/1996
6	TEXAS	SAN ANTONIO, CITY OF	48029C0606E	02/16/1996
6	TEXAS	SAN ANTONIO, CITY OF	48029C0607E	02/16/1996
6	TEXAS	SAN ANTONIO, CITY OF	48029C0609E	02/16/1996
6	TEXAS	SAN ANTONIO, CITY OF	48029C0615E	02/16/1996
6	TEXAS	SAN ANTONIO, CITY OF	48029C0620E	02/16/1996
6	TEXAS	SAN ANTONIO, CITY OF	48029C0626E	02/16/1996
6	TEXAS	SAN ANTONIO, CITY OF	48029C0627E	02/16/1996
6	TEXAS	SAN ANTONIO, CITY OF	48029C0628E	02/16/1996
6	TEXAS	SAN ANTONIO, CITY OF	48029C0629E	02/16/1996
6	TEXAS	SAN ANTONIO, CITY OF	48029C0631E	02/16/1996
6	TEXAS	SAN ANTONIO, CITY OF	48029C0632E	02/16/1996
6	TEXAS	SAN ANTONIO, CITY OF	48029C0633E	02/16/1996
6	TEXAS	SAN ANTONIO, CITY OF	48029C0634E	02/16/1996
6	TEXAS	SAN ANTONIO, CITY OF	48029C0636E	02/16/1996
6	TEXAS	SAN ANTONIO, CITY OF	48029C0637E	02/16/1996
6	TEXAS	SAN ANTONIO, CITY OF	48029C0640E	02/16/1996
6	TEXAS	SAN ANTONIO, CITY OF	48029C0641E	02/16/1996
6	TEXAS	SAN ANTONIO, CITY OF	48029C0642E	02/16/1996
6	TEXAS	SAN ANTONIO, CITY OF	48029C0645E	02/16/1996
6	TEXAS	SAN ANTONIO, CITY OF	48029C0665E	02/16/1996
6	TEXAS	SAN ANTONIO, CITY OF	48029C0675E	02/16/1996
6	TEXAS	SAN ANTONIO, CITY OF	48029C0805E	02/16/1996
6	TEXAS	SAN ANTONIO, CITY OF	48029C0810E	02/16/1996
6	TEXAS	SAN ANTONIO, CITY OF	48029C0830E	02/16/1996
6	TEXAS	SCHERTZ, CITY OF	48029C0000	02/16/1996
6	TEXAS	SELMA, CITY OF	48029C0000	02/16/1996
6	TEXAS	SELMA, CITY OF	48029C0302E	02/16/1996
6	TEXAS	SELMA, CITY OF	48029C0304E	02/16/1996
6	TEXAS	SELMA, CITY OF	48029C0306E	02/16/1996
6	TEXAS	SELMA, CITY OF	48029C0308E	02/16/1996
6	TEXAS	SHAVANO PARK, TOWN OF	48029C0000	02/16/1996
6	TEXAS	SHAVANO PARK, TOWN OF	48029C0252E	02/16/1996
6	TEXAS	SHAVANO PARK, TOWN OF	48029C0254E	02/16/1996
6	TEXAS	SHAVANO PARK, TOWN OF	48029C0256E	02/16/1996
6	TEXAS	SHAVANO PARK, TOWN OF	48029C0258E	02/16/1996
6	TEXAS	SILSBEE, CITY OF	48199C0000	04/17/1996
6	TEXAS	SOMERSET, CITY OF	48029C0000	02/16/1996
6	TEXAS	SOMERSET, CITY OF	48029C0760E	02/16/1996
6	TEXAS	SOUR LAKE, CITY OF	48199C0000	04/17/1996
6	TEXAS	SOUR LAKE, CITY OF	48199C0200E	04/17/1996
6	TEXAS	ST. HEDWIG, CITY OF	48029C0000	02/16/1996
6	TEXAS	ST. HEDWIG, CITY OF	48029C0495E	02/16/1996
6	TEXAS	ST. HEDWIG, CITY OF	48029C0505E	02/16/1996
6	TEXAS	ST. HEDWIG, CITY OF	48029C0510E	02/16/1996
6	TEXAS	ST. HEDWIG, CITY OF	48029C0515E	02/16/1996
6	TEXAS	ST. HEDWIG, CITY OF	48029C0520E	02/16/1996
6	TEXAS	ST. HEDWIG, CITY OF	48029C0680E	02/16/1996

MAP REVISIONS—Continued

Region	State	Community	Panel number	Effective date
6	TEXAS	ST. PAUL, TOWN OF	48085C0000	01/19/1996
6	TEXAS	ST. PAUL, TOWN OF	48085C0465G	01/19/1996
6	TEXAS	ST. PAUL, TOWN OF	48085C0470G	01/19/1996
6	TEXAS	TERRELL HILLS, CITY OF	48029C0000	02/16/1996
6	TEXAS	TERRELL HILLS, CITY OF	48029C0452E	02/16/1996
6	TEXAS	TERRELL HILLS, CITY OF	48029C0454E	02/16/1996
6	TEXAS	TERRELL HILLS, CITY OF	48029C0456E	02/16/1996
6	TEXAS	TERRELL, CITY OF	4804160000	03/04/1996
6	TEXAS	TERRELL, CITY OF	4804160005B	03/04/1996
6	TEXAS	TERRELL, CITY OF	4804160010B	03/04/1996
6	TEXAS	UNIVERSAL CITY, CITY OF	48029C0000	02/16/1996
6	TEXAS	UNIVERSAL CITY, CITY OF	48029C0304E	02/16/1996
6	TEXAS	UNIVERSAL CITY, CITY OF	48029C0308E	02/16/1996
6	TEXAS	UNIVERSAL CITY, CITY OF	48029C0312E	02/16/1996
6	TEXAS	UNIVERSAL CITY, CITY OF	48029C0316E	02/16/1996
6	TEXAS	UNIVERSAL CITY, CITY OF	48029C0317E	02/16/1996
6	TEXAS	UNIVERSAL CITY, CITY OF	48029C0318E	02/16/1996
6	TEXAS	WALNUT GROVE, CITY OF	48085C0000	01/19/1996
6	TEXAS	WESTMINSTER, TOWN OF	48085C0000	01/19/1996
6	TEXAS	WESTMINSTER, TOWN OF	48085C0200G	01/19/1996
6	TEXAS	WESTON, TOWN OF	48085C0000	01/19/1996
6	TEXAS	WESTON, TOWN OF	48085C0050G	01/19/1996
6	TEXAS	WESTON, TOWN OF	48085C0150G	01/19/1996
6	TEXAS	WESTON, TOWN OF	48085C0175G	01/19/1996
6	TEXAS	WINDCREST, CITY OF	48029C0000	02/16/1996
6	TEXAS	WINDCREST, CITY OF	48029C0294E	02/16/1996
6	TEXAS	WINDCREST, CITY OF	48029C0313E	02/16/1996
6	TEXAS	WYLIE, CITY OF	48085C0000	01/19/1996
6	TEXAS	WYLIE, CITY OF	48085C0465G	01/19/1996
6	TEXAS	WYLIE, CITY OF	48085C0470G	01/19/1996
6	TEXAS	WYLIE, CITY OF	48085C0500G	01/19/1996
6	TEXAS	WYLIE, CITY OF	48085C0580G	01/19/1996
6	TEXAS	WYLIE, CITY OF	48085C0585G	01/19/1996
7	KANSAS	DERBY, CITY OF	2003230000	05/06/1996
7	KANSAS	DERBY, CITY OF	2003230001C	05/06/1996
7	KANSAS	DERBY, CITY OF	2003230002C	05/06/1996
7	MISSOURI	SEDALIA, CITY OF	2902830000	01/05/1996
7	MISSOURI	SEDALIA, CITY OF	2902830001C	01/05/1996
7	MISSOURI	SEDALIA, CITY OF	2902830002C	01/05/1996
7	MISSOURI	SEDALIA, CITY OF	2902830005C	01/05/1996
7	NEBRASKA	CUMING COUNTY*	3104270000	04/01/1996
7	NEBRASKA	CUMING COUNTY*	3104270001B	04/01/1996
7	NEBRASKA	CUMING COUNTY*	3104270002B	04/01/1996
7	NEBRASKA	CUMING COUNTY*	3104270003B	04/01/1996
7	NEBRASKA	CUMING COUNTY*	3104270004B	04/01/1996
7	NEBRASKA	CUMING COUNTY*	3104270005B	04/01/1996
7	NEBRASKA	CUMING COUNTY*	3104270006B	04/01/1996
7	NEBRASKA	CUMING COUNTY*	3104279999B	04/01/1996
7	NEBRASKA	DAKOTA COUNTY*	3104290000	06/18/1996
7	NEBRASKA	DAKOTA COUNTY*	3104290120C	06/18/1996
7	NEBRASKA	DAKOTA COUNTY*	3104290140C	06/18/1996
7	NEBRASKA	HOMER, VILLAGE OF	3102410000	06/18/1996
7	NEBRASKA	HOMER, VILLAGE OF	3102410002C	06/18/1996
7	NEBRASKA	HOMER, VILLAGE OF	3102410004C	06/18/1996
8	COLORADO	BOULDER COUNTY*	08013C0000	05/06/1996
8	COLORADO	BOULDER COUNTY*	08013C0576G	05/06/1996
8	COLORADO	BOULDER COUNTY*	08013C0577G	05/06/1996
8	COLORADO	BOULDER, CITY OF	08013C0000	05/06/1996
8	COLORADO	BROOMFIELD, CITY OF	08013C0000	05/06/1996
8	COLORADO	DENVER, CITY AND COUNTY OF	800460000	03/04/1996
8	COLORADO	DENVER, CITY AND COUNTY OF	0800460006D	03/04/1996
8	COLORADO	DENVER, CITY AND COUNTY OF	0800460012E	03/04/1996
8	COLORADO	DOUGLAS COUNTY*	800490000	01/05/1996
8	COLORADO	DOUGLAS COUNTY*	0800490070E	01/05/1996
8	COLORADO	ERIE, TOWN OF	08013C0000	05/06/1996
8	COLORADO	FORT COLLINS, CITY OF	801020000	03/18/1996
8	COLORADO	FORT COLLINS, CITY OF	0801020004C	03/18/1996
8	COLORADO	FORT COLLINS, CITY OF	0801020006C	03/18/1996
8	COLORADO	FORT COLLINS, CITY OF	0801020008C	03/18/1996
8	COLORADO	FORT COLLINS, CITY OF	0801020011C	03/18/1996
8	COLORADO	FORT COLLINS, CITY OF	0801020012C	03/18/1996
8	COLORADO	FORT COLLINS, CITY OF	0801020016C	03/18/1996

MAP REVISIONS—Continued

Region	State	Community	Panel number	Effective date
8	COLORADO	FORT COLLINS, CITY OF	0801020018C	03/18/1996
8	COLORADO	JAMESTOWN, TOWN OF	08013C0000	05/06/1996
8	COLORADO	LAFAYETTE, CITY OF	08013C0000	05/06/1996
8	COLORADO	LAFAYETTE, CITY OF	08013C0576G	05/06/1996
8	COLORADO	LAFAYETTE, CITY OF	08013C0577G	05/06/1996
8	COLORADO	LARIMER COUNTY*	801010000	03/18/1996
8	COLORADO	LARIMER COUNTY*	0801010162C	03/18/1996
8	COLORADO	LARIMER COUNTY*	0801010163D	03/18/1996
8	COLORADO	LARIMER COUNTY*	0801010178D	03/18/1996
8	COLORADO	LARIMER COUNTY*	0801010179D	03/18/1996
8	COLORADO	LARIMER COUNTY*	0801010180E	03/18/1996
8	COLORADO	LARIMER COUNTY*	0801010192C	03/18/1996
8	COLORADO	LARIMER COUNTY*	0801010193E	03/18/1996
8	COLORADO	LARIMER COUNTY*	0801010194E	03/18/1996
8	COLORADO	LONGMONT, CITY OF	08013C0000	05/06/1996
8	COLORADO	LOUISVILLE, CITY OF	08013C0000	05/06/1996
8	COLORADO	LOUISVILLE, CITY OF	08013C0576G	05/06/1996
8	COLORADO	LYONS, TOWN OF	08013C0000	05/06/1996
8	COLORADO	NEDERLAND, TOWN OF	08013C0000	05/06/1996
8	COLORADO	PARKER, TOWN OF	803100000	02/02/1996
8	COLORADO	PARKER, TOWN OF	0803100070D	02/02/1996
8	COLORADO	SUPERIOR, TOWN OF	08013C0000	05/06/1996
8	COLORADO	WARD, TOWN OF	08013C0000	05/06/1996
8	MONTANA	SANDERS COUNTY*	3000720000	03/01/1996
8	MONTANA	SANDERS COUNTY*	3000720001B	03/01/1996
8	MONTANA	SANDERS COUNTY*	3000720002B	03/01/1996
8	MONTANA	SANDERS COUNTY*	3000720003B	03/01/1996
8	MONTANA	SANDERS COUNTY*	3000720004B	03/01/1996
8	MONTANA	SANDERS COUNTY*	3000720005B	03/01/1996
8	MONTANA	SANDERS COUNTY*	3000720006B	03/01/1996
8	MONTANA	SANDERS COUNTY*	3000720007B	03/01/1996
8	MONTANA	SANDERS COUNTY*	3000720008B	03/01/1996
8	MONTANA	SANDERS COUNTY*	3000720009B	03/01/1996
8	MONTANA	SANDERS COUNTY*	3000720010B	03/01/1996
8	MONTANA	SANDERS COUNTY*	3000720012B	03/01/1996
8	MONTANA	SANDERS COUNTY*	3000720013B	03/01/1996
8	MONTANA	SANDERS COUNTY*	3000720014B	03/01/1996
8	MONTANA	SANDERS COUNTY*	3000720015B	03/01/1996
8	MONTANA	SANDERS COUNTY*	3000720016B	03/01/1996
8	MONTANA	SANDERS COUNTY*	3000720017C	03/01/1996
8	MONTANA	SANDERS COUNTY*	3000720018B	03/01/1996
8	MONTANA	SANDERS COUNTY*	3000720019B	03/01/1996
8	MONTANA	SANDERS COUNTY*	3000720022B	03/01/1996
8	MONTANA	SANDERS COUNTY*	3000720023B	03/01/1996
8	MONTANA	SANDERS COUNTY*	3000720024B	03/01/1996
8	MONTANA	SANDERS COUNTY*	3000720025B	03/01/1996
8	MONTANA	SANDERS COUNTY*	3000720026B	03/01/1996
8	MONTANA	SANDERS COUNTY*	3000729999C	03/01/1996
8	SOUTH DAKOTA	PENNINGTON COUNTY*	4600640000	05/20/1996
8	SOUTH DAKOTA	PENNINGTON COUNTY*	4600640000	05/20/1996
8	SOUTH DAKOTA	PENNINGTON COUNTY*	4600640758C	05/20/1996
8	SOUTH DAKOTA	PENNINGTON COUNTY*	4600640766C	05/20/1996
8	SOUTH DAKOTA	PENNINGTON COUNTY*	4600640767C	05/20/1996
8	SOUTH DAKOTA	RAPID CITY, CITY OF	4654200000	02/16/1996
8	SOUTH DAKOTA	RAPID CITY, CITY OF	4654200001F	02/16/1996
8	SOUTH DAKOTA	RAPID CITY, CITY OF	4654200003F	02/16/1996
8	SOUTH DAKOTA	RAPID CITY, CITY OF	4654200004F	02/16/1996
8	SOUTH DAKOTA	RAPID CITY, CITY OF	4654200006F	02/16/1996
8	SOUTH DAKOTA	RAPID CITY, CITY OF	4654200008F	02/16/1996
8	SOUTH DAKOTA	RAPID CITY, CITY OF	4654200009F	02/16/1996
8	SOUTH DAKOTA	RAPID CITY, CITY OF	4654200011F	02/16/1996
8	SOUTH DAKOTA	RAPID CITY, CITY OF	4654200012F	02/16/1996
8	SOUTH DAKOTA	RAPID CITY, CITY OF	4654200016F	02/16/1996
8	SOUTH DAKOTA	RAPID CITY, CITY OF	4654200017F	02/16/1996
8	UTAH	FARMINGTON, CITY OF	4900440000	02/16/1996
8	UTAH	FARMINGTON, CITY OF	4900440001D	02/16/1996
8	UTAH	FARMINGTON, CITY OF	4900440002D	02/16/1996
8	UTAH	FARMINGTON, CITY OF	4900440003D	02/16/1996
9	ARIZONA	TUCSON, CITY OF	400760000	06/04/1996
9	ARIZONA	TUCSON, CITY OF	0400760015G	06/04/1996
9	ARIZONA	TUCSON, CITY OF	0400760020H	06/04/1996
9	CALIFORNIA	ADELANTO, CITY OF	06071C0000	03/18/1996

MAP REVISIONS—Continued

Region	State	Community	Panel number	Effective date
9	CALIFORNIA	ADELANTO, CITY OF	06071C5780F	03/18/1996
9	CALIFORNIA	ADELANTO, CITY OF	06071C5785F	03/18/1996
9	CALIFORNIA	ADELANTO, CITY OF	06071C5790F	03/18/1996
9	CALIFORNIA	ADELANTO, CITY OF	06071C5795F	03/18/1996
9	CALIFORNIA	ADELANTO, CITY OF	06071C5805F	03/18/1996
9	CALIFORNIA	ADELANTO, CITY OF	06071C5815F	03/18/1996
9	CALIFORNIA	APPLE VALLEY, CITY OF	06071C0000	03/18/1996
9	CALIFORNIA	APPLE VALLEY, CITY OF	06071C5810F	03/18/1996
9	CALIFORNIA	APPLE VALLEY, CITY OF	06071C5820F	03/18/1996
9	CALIFORNIA	APPLE VALLEY, CITY OF	06071C5840F	03/18/1996
9	CALIFORNIA	APPLE VALLEY, CITY OF	06071C5845F	03/18/1996
9	CALIFORNIA	APPLE VALLEY, CITY OF	06071C6485F	03/18/1996
9	CALIFORNIA	APPLE VALLEY, CITY OF	06071C6505F	03/18/1996
9	CALIFORNIA	APPLE VALLEY, CITY OF	06071C6515F	03/18/1996
9	CALIFORNIA	BARSTOW, CITY OF	06071C0000	03/18/1996
9	CALIFORNIA	BARSTOW, CITY OF	06071C3915F	03/18/1996
9	CALIFORNIA	BARSTOW, CITY OF	06071C3917F	03/18/1996
9	CALIFORNIA	BARSTOW, CITY OF	06071C3918F	03/18/1996
9	CALIFORNIA	BARSTOW, CITY OF	06071C3919F	03/18/1996
9	CALIFORNIA	BARSTOW, CITY OF	06071C3938F	03/18/1996
9	CALIFORNIA	BARSTOW, CITY OF	06071C3939F	03/18/1996
9	CALIFORNIA	BARSTOW, CITY OF	06071C4507F	03/18/1996
9	CALIFORNIA	BARSTOW, CITY OF	06071C4509F	03/18/1996
9	CALIFORNIA	BARSTOW, CITY OF	06071C4526F	03/18/1996
9	CALIFORNIA	BARSTOW, CITY OF	06071C4527F	03/18/1996
9	CALIFORNIA	BARSTOW, CITY OF	06071C4528F	03/18/1996
9	CALIFORNIA	BARSTOW, CITY OF	06071C4529F	03/18/1996
9	CALIFORNIA	BARSTOW, CITY OF	06071C4532F	03/18/1996
9	CALIFORNIA	BARSTOW, CITY OF	06071C4551F	03/18/1996
9	CALIFORNIA	BIG BEAR LAKE, TOWN OF	06071C0000	03/18/1996
9	CALIFORNIA	BIG BEAR LAKE, TOWN OF	06071C7290F	03/18/1996
9	CALIFORNIA	BIG BEAR LAKE, TOWN OF	06071C7295F	03/18/1996
9	CALIFORNIA	BIG BEAR LAKE, TOWN OF	06071C7315F	03/18/1996
9	CALIFORNIA	BIG BEAR LAKE, TOWN OF	06071C8005F	03/18/1996
9	CALIFORNIA	BIG BEAR LAKE, TOWN OF	06071C8010F	03/18/1996
9	CALIFORNIA	BIG BEAR LAKE, TOWN OF	06071C8030F	03/18/1996
9	CALIFORNIA	CATHEDRAL CITY, CITY OF	607040000	06/18/1996
9	CALIFORNIA	CATHEDRAL CITY, CITY OF	0607040005C	06/18/1996
9	CALIFORNIA	CATHEDRAL CITY, CITY OF	0607040010B	06/18/1996
9	CALIFORNIA	CHINO HILLS, CITY OF	06071C0000	03/18/1996
9	CALIFORNIA	CHINO HILLS, CITY OF	06071C8615F	03/18/1996
9	CALIFORNIA	CHINO HILLS, CITY OF	06071C9330F	03/18/1996
9	CALIFORNIA	CHINO HILLS, CITY OF	06071C9335F	03/18/1996
9	CALIFORNIA	CHINO, CITY OF	06071C0000	03/18/1996
9	CALIFORNIA	CHINO, CITY OF	06071C8615F	03/18/1996
9	CALIFORNIA	CHINO, CITY OF	06071C8616F	03/18/1996
9	CALIFORNIA	CHINO, CITY OF	06071C8617F	03/18/1996
9	CALIFORNIA	CHINO, CITY OF	06071C8620F	03/18/1996
9	CALIFORNIA	CHINO, CITY OF	06071C9330F	03/18/1996
9	CALIFORNIA	CHINO, CITY OF	06071C9335F	03/18/1996
9	CALIFORNIA	COLTON, CITY OF	06071C0000	03/18/1996
9	CALIFORNIA	COLTON, CITY OF	06071C8677F	03/18/1996
9	CALIFORNIA	COLTON, CITY OF	06071C8678F	03/18/1996
9	CALIFORNIA	COLTON, CITY OF	06071C8679F	03/18/1996
9	CALIFORNIA	COLTON, CITY OF	06071C8683F	03/18/1996
9	CALIFORNIA	COLTON, CITY OF	06071C8686F	03/18/1996
9	CALIFORNIA	COLTON, CITY OF	06071C8687F	03/18/1996
9	CALIFORNIA	COLTON, CITY OF	06071C8688F	03/18/1996
9	CALIFORNIA	COLTON, CITY OF	06071C8689F	03/18/1996
9	CALIFORNIA	COLTON, CITY OF	06071C8691F	03/18/1996
9	CALIFORNIA	COLTON, CITY OF	06071C8692F	03/18/1996
9	CALIFORNIA	COLTON, CITY OF	06071C8693F	03/18/1996
9	CALIFORNIA	COLTON, CITY OF	06071C8694F	03/18/1996
9	CALIFORNIA	CONTRA COSTA COUNTY*	600250000	05/20/1996
9	CALIFORNIA	CONTRA COSTA COUNTY*	0600250290C	05/20/1996
9	CALIFORNIA	CONTRA COSTA COUNTY*	0600250295C	05/20/1996
9	CALIFORNIA	CONTRA COSTA COUNTY*	0600250430C	05/20/1996
9	CALIFORNIA	CONTRA COSTA COUNTY*	0600250435C	05/20/1996
9	CALIFORNIA	CORONA, CITY OF	602500000	06/18/1996
9	CALIFORNIA	CORONA, CITY OF	0602500005F	06/18/1996
9	CALIFORNIA	CORONA, CITY OF	0602500010D	06/18/1996
9	CALIFORNIA	FONTANA, CITY OF	06071C0000	03/18/1996

MAP REVISIONS—Continued

Region	State	Community	Panel number	Effective date
9	CALIFORNIA	FONTANA, CITY OF	06071C7895F	03/18/1996
9	CALIFORNIA	FONTANA, CITY OF	06071C7912F	03/18/1996
9	CALIFORNIA	FONTANA, CITY OF	06071C7913F	03/18/1996
9	CALIFORNIA	FONTANA, CITY OF	06071C7920F	03/18/1996
9	CALIFORNIA	FONTANA, CITY OF	06071C8634F	03/18/1996
9	CALIFORNIA	FONTANA, CITY OF	06071C8635F	03/18/1996
9	CALIFORNIA	FONTANA, CITY OF	06071C8642F	03/18/1996
9	CALIFORNIA	FONTANA, CITY OF	06071C8651F	03/18/1996
9	CALIFORNIA	FONTANA, CITY OF	06071C8652F	03/18/1996
9	CALIFORNIA	FONTANA, CITY OF	06071C8653F	03/18/1996
9	CALIFORNIA	FONTANA, CITY OF	06071C8654F	03/18/1996
9	CALIFORNIA	FONTANA, CITY OF	06071C8658F	03/18/1996
9	CALIFORNIA	FONTANA, CITY OF	06071C8666F	03/18/1996
9	CALIFORNIA	FORT MOJAVE INDIAN TRIBE	06071C0000	03/18/1996
9	CALIFORNIA	GRANDE TERRACE, CITY OF	06071C0000	03/18/1996
9	CALIFORNIA	GRANDE TERRACE, CITY OF	06071C8687F	03/18/1996
9	CALIFORNIA	GRANDE TERRACE, CITY OF	06071C8689F	03/18/1996
9	CALIFORNIA	GRANDE TERRACE, CITY OF	06071C8691F	03/18/1996
9	CALIFORNIA	GRANDE TERRACE, CITY OF	06071C8693F	03/18/1996
9	CALIFORNIA	HESPERIA, CITY OF	06071C0000	03/18/1996
9	CALIFORNIA	HESPERIA, CITY OF	06071C6480F	03/18/1996
9	CALIFORNIA	HESPERIA, CITY OF	06071C6485F	03/18/1996
9	CALIFORNIA	HESPERIA, CITY OF	06071C6495F	03/18/1996
9	CALIFORNIA	HESPERIA, CITY OF	06071C6505F	03/18/1996
9	CALIFORNIA	HESPERIA, CITY OF	06071C6515F	03/18/1996
9	CALIFORNIA	HESPERIA, CITY OF	06071C7225F	03/18/1996
9	CALIFORNIA	HIGHLAND, CITY OF	06071C0000	03/18/1996
9	CALIFORNIA	HIGHLAND, CITY OF	06071C7944F	03/18/1996
9	CALIFORNIA	HIGHLAND, CITY OF	06071C7963F	03/18/1996
9	CALIFORNIA	HIGHLAND, CITY OF	06071C7965F	03/18/1996
9	CALIFORNIA	HIGHLAND, CITY OF	06071C8682F	03/18/1996
9	CALIFORNIA	HIGHLAND, CITY OF	06071C8701F	03/18/1996
9	CALIFORNIA	HIGHLAND, CITY OF	06071C8702F	03/18/1996
9	CALIFORNIA	HIGHLAND, CITY OF	06071C8706F	03/18/1996
9	CALIFORNIA	HIGHLAND, CITY OF	06071C8707F	03/18/1996
9	CALIFORNIA	LAFAYETTE, CITY OF	650370000	05/20/1996
9	CALIFORNIA	LAFAYETTE, CITY OF	0650370006C	05/20/1996
9	CALIFORNIA	LAFAYETTE, CITY OF	0650370009C	05/20/1996
9	CALIFORNIA	LAKE ELSINORE, CITY OF	606360000	06/18/1996
9	CALIFORNIA	LAKE ELSINORE, CITY OF	0606360003E	06/18/1996
9	CALIFORNIA	LAKE ELSINORE, CITY OF	0606360004E	06/18/1996
9	CALIFORNIA	LAKE ELSINORE, CITY OF	0606360011E	06/18/1996
9	CALIFORNIA	LAKE ELSINORE, CITY OF	0606360012E	06/18/1996
9	CALIFORNIA	LAKE ELSINORE, CITY OF	0606360013E	06/18/1996
9	CALIFORNIA	LAKE ELSINORE, CITY OF	0606360014E	06/18/1996
9	CALIFORNIA	LAKE ELSINORE, CITY OF	0606360016E	06/18/1996
9	CALIFORNIA	LAKE ELSINORE, CITY OF	0606360018E	06/18/1996
9	CALIFORNIA	LAKE ELSINORE, CITY OF	0606360019E	06/18/1996
9	CALIFORNIA	LAKE ELSINORE, CITY OF	0606360026E	06/18/1996
9	CALIFORNIA	LAKE ELSINORE, CITY OF	0606360027E	06/18/1996
9	CALIFORNIA	LAKE ELSINORE, CITY OF	0606360031E	06/18/1996
9	CALIFORNIA	LAKE ELSINORE, CITY OF	0606360033E	06/18/1996
9	CALIFORNIA	LOMA LINDA, CITY OF	06071C0000	03/18/1996
9	CALIFORNIA	LOMA LINDA, CITY OF	06071C8684F	03/18/1996
9	CALIFORNIA	LOMA LINDA, CITY OF	06071C8692F	03/18/1996
9	CALIFORNIA	LOMA LINDA, CITY OF	06071C8694F	03/18/1996
9	CALIFORNIA	LOMA LINDA, CITY OF	06071C8703F	03/18/1996
9	CALIFORNIA	LOMA LINDA, CITY OF	06071C8711F	03/18/1996
9	CALIFORNIA	MONTCLAIR, CITY OF	06071C0000	03/18/1996
9	CALIFORNIA	MONTCLAIR, CITY OF	06071C8608F	03/18/1996
9	CALIFORNIA	MONTCLAIR, CITY OF	06071C8610F	03/18/1996
9	CALIFORNIA	MONTCLAIR, CITY OF	06071C8615F	03/18/1996
9	CALIFORNIA	MONTCLAIR, CITY OF	06071C8616F	03/18/1996
9	CALIFORNIA	NEEDLES, CITY OF	06071C0000	03/18/1996
9	CALIFORNIA	NEEDLES, CITY OF	06071C4393F	03/18/1996
9	CALIFORNIA	NEEDLES, CITY OF	06071C4394F	03/18/1996
9	CALIFORNIA	NEEDLES, CITY OF	06071C5006F	03/18/1996
9	CALIFORNIA	NEEDLES, CITY OF	06071C5007F	03/18/1996
9	CALIFORNIA	NEEDLES, CITY OF	06071C5009F	03/18/1996
9	CALIFORNIA	NEEDLES, CITY OF	06071C5017F	03/18/1996
9	CALIFORNIA	NEEDLES, CITY OF	06071C5026F	03/18/1996
9	CALIFORNIA	NEEDLES, CITY OF	06071C5028F	03/18/1996

MAP REVISIONS—Continued

Region	State	Community	Panel number	Effective date
9	CALIFORNIA	NEEDLES, CITY OF	06071C5029F	03/18/1996
9	CALIFORNIA	NEEDLES, CITY OF	06071C5036F	03/18/1996
9	CALIFORNIA	NEEDLES, CITY OF	06071C5037F	03/18/1996
9	CALIFORNIA	ONTARIO, CITY OF	06071C0000	03/18/1996
9	CALIFORNIA	ONTARIO, CITY OF	06071C8608F	03/18/1996
9	CALIFORNIA	ONTARIO, CITY OF	06071C8609F	03/18/1996
9	CALIFORNIA	ONTARIO, CITY OF	06071C8616F	03/18/1996
9	CALIFORNIA	ONTARIO, CITY OF	06071C8617F	03/18/1996
9	CALIFORNIA	ONTARIO, CITY OF	06071C8620F	03/18/1996
9	CALIFORNIA	ONTARIO, CITY OF	06071C8628F	03/18/1996
9	CALIFORNIA	ONTARIO, CITY OF	06071C8629F	03/18/1996
9	CALIFORNIA	ONTARIO, CITY OF	06071C8633F	03/18/1996
9	CALIFORNIA	ONTARIO, CITY OF	06071C8634F	03/18/1996
9	CALIFORNIA	ONTARIO, CITY OF	06071C8636F	03/18/1996
9	CALIFORNIA	ONTARIO, CITY OF	06071C8637F	03/18/1996
9	CALIFORNIA	ONTARIO, CITY OF	06071C8638F	03/18/1996
9	CALIFORNIA	ONTARIO, CITY OF	06071C8639F	03/18/1996
9	CALIFORNIA	ONTARIO, CITY OF	06071C8641F	03/18/1996
9	CALIFORNIA	ONTARIO, CITY OF	06071C8642F	03/18/1996
9	CALIFORNIA	PALM DESERT, CITY OF	606290000	06/18/1996
9	CALIFORNIA	PALM DESERT, CITY OF	0606290003D	06/18/1996
9	CALIFORNIA	PALM SPRINGS, CITY OF	602570000	06/18/1996
9	CALIFORNIA	PALM SPRINGS, CITY OF	0602570004C	06/18/1996
9	CALIFORNIA	PALM SPRINGS, CITY OF	0602570006C	06/18/1996
9	CALIFORNIA	PALM SPRINGS, CITY OF	0602570007C	06/18/1996
9	CALIFORNIA	PALM SPRINGS, CITY OF	0602570008C	06/18/1996
9	CALIFORNIA	PALM SPRINGS, CITY OF	0602570009C	06/18/1996
9	CALIFORNIA	RANCHO CUCAMONGA, CITY OF	06071C0000	03/18/1996
9	CALIFORNIA	RANCHO CUCAMONGA, CITY OF	06071C7870F	03/18/1996
9	CALIFORNIA	RANCHO CUCAMONGA, CITY OF	06071C7890F	03/18/1996
9	CALIFORNIA	RANCHO CUCAMONGA, CITY OF	06071C7895F	03/18/1996
9	CALIFORNIA	RANCHO CUCAMONGA, CITY OF	06071C7913F	03/18/1996
9	CALIFORNIA	RANCHO CUCAMONGA, CITY OF	06071C8609F	03/18/1996
9	CALIFORNIA	RANCHO CUCAMONGA, CITY OF	06071C8610F	03/18/1996
9	CALIFORNIA	RANCHO CUCAMONGA, CITY OF	06071C8628F	03/18/1996
9	CALIFORNIA	RANCHO CUCAMONGA, CITY OF	06071C8629F	03/18/1996
9	CALIFORNIA	RANCHO CUCAMONGA, CITY OF	06071C8630F	03/18/1996
9	CALIFORNIA	RANCHO CUCAMONGA, CITY OF	06071C8633F	03/18/1996
9	CALIFORNIA	RANCHO CUCAMONGA, CITY OF	06071C8634F	03/18/1996
9	CALIFORNIA	RANCHO CUCAMONGA, CITY OF	06071C8635F	03/18/1996
9	CALIFORNIA	RANCHO MIRAGE, CITY OF	602590000	06/18/1996
9	CALIFORNIA	RANCHO MIRAGE, CITY OF	0602590001C	06/18/1996
9	CALIFORNIA	RANCHO MIRAGE, CITY OF	0602590003C	06/18/1996
9	CALIFORNIA	RANCHO MIRAGE, CITY OF	0602590004C	06/18/1996
9	CALIFORNIA	RANCHO MIRAGE, CITY OF	0602590006C	06/18/1996
9	CALIFORNIA	RANCHO MIRAGE, CITY OF	0602590007C	06/18/1996
9	CALIFORNIA	REDLANDS, CITY OF	06071C0000	03/18/1996
9	CALIFORNIA	REDLANDS, CITY OF	06071C8684F	03/18/1996
9	CALIFORNIA	REDLANDS, CITY OF	06071C8701F	03/18/1996
9	CALIFORNIA	REDLANDS, CITY OF	06071C8702F	03/18/1996
9	CALIFORNIA	REDLANDS, CITY OF	06071C8703F	03/18/1996
9	CALIFORNIA	REDLANDS, CITY OF	06071C8704F	03/18/1996
9	CALIFORNIA	REDLANDS, CITY OF	06071C8706F	03/18/1996
9	CALIFORNIA	REDLANDS, CITY OF	06071C8707F	03/18/1996
9	CALIFORNIA	REDLANDS, CITY OF	06071C8708F	03/18/1996
9	CALIFORNIA	REDLANDS, CITY OF	06071C8709F	03/18/1996
9	CALIFORNIA	REDLANDS, CITY OF	06071C8711F	03/18/1996
9	CALIFORNIA	REDLANDS, CITY OF	06071C8712F	03/18/1996
9	CALIFORNIA	REDLANDS, CITY OF	06071C8714F	03/18/1996
9	CALIFORNIA	REDLANDS, CITY OF	06071C8716F	03/18/1996
9	CALIFORNIA	REDLANDS, CITY OF	06071C8717F	03/18/1996
9	CALIFORNIA	REDLANDS, CITY OF	06071C8718F	03/18/1996
9	CALIFORNIA	REDLANDS, CITY OF	06071C8730F	03/18/1996
9	CALIFORNIA	REDLANDS, CITY OF	06071C8735F	03/18/1996
9	CALIFORNIA	REDLANDS, CITY OF	06071C8740F	03/18/1996
9	CALIFORNIA	RIALTO, CITY OF	06071C0000	03/18/1996
9	CALIFORNIA	RIALTO, CITY OF	06071C7920F	03/18/1996
9	CALIFORNIA	RIALTO, CITY OF	06071C7940F	03/18/1996
9	CALIFORNIA	RIALTO, CITY OF	06071C8676F	03/18/1996
9	CALIFORNIA	RIALTO, CITY OF	06071C8677F	03/18/1996
9	CALIFORNIA	RIALTO, CITY OF	06071C8678F	03/18/1996
9	CALIFORNIA	RIALTO, CITY OF	06071C8686F	03/18/1996

MAP REVISIONS—Continued

Region	State	Community	Panel number	Effective date
9	CALIFORNIA	RIALTO, CITY OF	06071C8688F	03/18/1996
9	CALIFORNIA	SAN BERNARDINO COUNTY*	06071C0000	03/18/1996
9	CALIFORNIA	SAN BERNARDINO COUNTY*	06071C0075F	03/18/1996
9	CALIFORNIA	SAN BERNARDINO COUNTY*	06071C0100F	03/18/1996
9	CALIFORNIA	SAN BERNARDINO COUNTY*	06071C0525F	03/18/1996
9	CALIFORNIA	SAN BERNARDINO COUNTY*	06071C2300F	03/18/1996
9	CALIFORNIA	SAN BERNARDINO COUNTY*	06071C2325F	03/18/1996
9	CALIFORNIA	SAN BERNARDINO COUNTY*	06071C2900F	03/18/1996
9	CALIFORNIA	SAN BERNARDINO COUNTY*	06071C3915F	03/18/1996
9	CALIFORNIA	SAN BERNARDINO COUNTY*	06071C3916F	03/18/1996
9	CALIFORNIA	SAN BERNARDINO COUNTY*	06071C3917F	03/18/1996
9	CALIFORNIA	SAN BERNARDINO COUNTY*	06071C3918F	03/18/1996
9	CALIFORNIA	SAN BERNARDINO COUNTY*	06071C3919F	03/18/1996
9	CALIFORNIA	SAN BERNARDINO COUNTY*	06071C3936F	03/18/1996
9	CALIFORNIA	SAN BERNARDINO COUNTY*	06071C3938F	03/18/1996
9	CALIFORNIA	SAN BERNARDINO COUNTY*	06071C3939F	03/18/1996
9	CALIFORNIA	SAN BERNARDINO COUNTY*	06071C3943F	03/18/1996
9	CALIFORNIA	SAN BERNARDINO COUNTY*	06071C3975F	03/18/1996
9	CALIFORNIA	SAN BERNARDINO COUNTY*	06071C4000F	03/18/1996
9	CALIFORNIA	SAN BERNARDINO COUNTY*	06071C4025F	03/18/1996
9	CALIFORNIA	SAN BERNARDINO COUNTY*	06071C4393F	03/18/1996
9	CALIFORNIA	SAN BERNARDINO COUNTY*	06071C4394F	03/18/1996
9	CALIFORNIA	SAN BERNARDINO COUNTY*	06071C4500F	03/18/1996
9	CALIFORNIA	SAN BERNARDINO COUNTY*	06071C4507F	03/18/1996
9	CALIFORNIA	SAN BERNARDINO COUNTY*	06071C4509F	03/18/1996
9	CALIFORNIA	SAN BERNARDINO COUNTY*	06071C4526F	03/18/1996
9	CALIFORNIA	SAN BERNARDINO COUNTY*	06071C4527F	03/18/1996
9	CALIFORNIA	SAN BERNARDINO COUNTY*	06071C4528F	03/18/1996
9	CALIFORNIA	SAN BERNARDINO COUNTY*	06071C4529F	03/18/1996
9	CALIFORNIA	SAN BERNARDINO COUNTY*	06071C4532F	03/18/1996
9	CALIFORNIA	SAN BERNARDINO COUNTY*	06071C4551F	03/18/1996
9	CALIFORNIA	SAN BERNARDINO COUNTY*	06071C4556F	03/18/1996
9	CALIFORNIA	SAN BERNARDINO COUNTY*	06071C5006F	03/18/1996
9	CALIFORNIA	SAN BERNARDINO COUNTY*	06071C5007F	03/18/1996
9	CALIFORNIA	SAN BERNARDINO COUNTY*	06071C5009F	03/18/1996
9	CALIFORNIA	SAN BERNARDINO COUNTY*	06071C5017F	03/18/1996
9	CALIFORNIA	SAN BERNARDINO COUNTY*	06071C5037F	03/18/1996
9	CALIFORNIA	SAN BERNARDINO COUNTY*	06071C5150F	03/18/1996
9	CALIFORNIA	SAN BERNARDINO COUNTY*	06071C5780F	03/18/1996
9	CALIFORNIA	SAN BERNARDINO COUNTY*	06071C5785F	03/18/1996
9	CALIFORNIA	SAN BERNARDINO COUNTY*	06071C5790F	03/18/1996
9	CALIFORNIA	SAN BERNARDINO COUNTY*	06071C5795F	03/18/1996
9	CALIFORNIA	SAN BERNARDINO COUNTY*	06071C5805F	03/18/1996
9	CALIFORNIA	SAN BERNARDINO COUNTY*	06071C5810F	03/18/1996
9	CALIFORNIA	SAN BERNARDINO COUNTY*	06071C5815F	03/18/1996
9	CALIFORNIA	SAN BERNARDINO COUNTY*	06071C5820F	03/18/1996
9	CALIFORNIA	SAN BERNARDINO COUNTY*	06071C5845F	03/18/1996
9	CALIFORNIA	SAN BERNARDINO COUNTY*	06071C6425F	03/18/1996
9	CALIFORNIA	SAN BERNARDINO COUNTY*	06071C6450F	03/18/1996
9	CALIFORNIA	SAN BERNARDINO COUNTY*	06071C6480F	03/18/1996
9	CALIFORNIA	SAN BERNARDINO COUNTY*	06071C6485F	03/18/1996
9	CALIFORNIA	SAN BERNARDINO COUNTY*	06071C6505F	03/18/1996
9	CALIFORNIA	SAN BERNARDINO COUNTY*	06071C6515F	03/18/1996
9	CALIFORNIA	SAN BERNARDINO COUNTY*	06071C7135F	03/18/1996
9	CALIFORNIA	SAN BERNARDINO COUNTY*	06071C7155F	03/18/1996
9	CALIFORNIA	SAN BERNARDINO COUNTY*	06071C7170F	03/18/1996
9	CALIFORNIA	SAN BERNARDINO COUNTY*	06071C7190F	03/18/1996
9	CALIFORNIA	SAN BERNARDINO COUNTY*	06071C7225F	03/18/1996
9	CALIFORNIA	SAN BERNARDINO COUNTY*	06071C7240F	03/18/1996
9	CALIFORNIA	SAN BERNARDINO COUNTY*	06071C7245F	03/18/1996
9	CALIFORNIA	SAN BERNARDINO COUNTY*	06071C7290F	03/18/1996
9	CALIFORNIA	SAN BERNARDINO COUNTY*	06071C7295F	03/18/1996
9	CALIFORNIA	SAN BERNARDINO COUNTY*	06071C7315F	03/18/1996
9	CALIFORNIA	SAN BERNARDINO COUNTY*	06071C7320F	03/18/1996
9	CALIFORNIA	SAN BERNARDINO COUNTY*	06071C7870F	03/18/1996
9	CALIFORNIA	SAN BERNARDINO COUNTY*	06071C7875F	03/18/1996
9	CALIFORNIA	SAN BERNARDINO COUNTY*	06071C7882F	03/18/1996
9	CALIFORNIA	SAN BERNARDINO COUNTY*	06071C7890F	03/18/1996
9	CALIFORNIA	SAN BERNARDINO COUNTY*	06071C7895F	03/18/1996
9	CALIFORNIA	SAN BERNARDINO COUNTY*	06071C7901F	03/18/1996
9	CALIFORNIA	SAN BERNARDINO COUNTY*	06071C7905F	03/18/1996
9	CALIFORNIA	SAN BERNARDINO COUNTY*	06071C7910F	03/18/1996

MAP REVISIONS—Continued

Region	State	Community	Panel number	Effective date
9	CALIFORNIA	SAN BERNARDINO COUNTY*	06071C7912F	03/18/1996
9	CALIFORNIA	SAN BERNARDINO COUNTY*	06071C7913F	03/18/1996
9	CALIFORNIA	SAN BERNARDINO COUNTY*	06071C7920F	03/18/1996
9	CALIFORNIA	SAN BERNARDINO COUNTY*	06071C7930F	03/18/1996
9	CALIFORNIA	SAN BERNARDINO COUNTY*	06071C7935F	03/18/1996
9	CALIFORNIA	SAN BERNARDINO COUNTY*	06071C7940F	03/18/1996
9	CALIFORNIA	SAN BERNARDINO COUNTY*	06071C7942F	03/18/1996
9	CALIFORNIA	SAN BERNARDINO COUNTY*	06071C7944F	03/18/1996
9	CALIFORNIA	SAN BERNARDINO COUNTY*	06071C7945F	03/18/1996
9	CALIFORNIA	SAN BERNARDINO COUNTY*	06071C7955F	03/18/1996
9	CALIFORNIA	SAN BERNARDINO COUNTY*	06071C7960F	03/18/1996
9	CALIFORNIA	SAN BERNARDINO COUNTY*	06071C7961F	03/18/1996
9	CALIFORNIA	SAN BERNARDINO COUNTY*	06071C7963F	03/18/1996
9	CALIFORNIA	SAN BERNARDINO COUNTY*	06071C7965F	03/18/1996
9	CALIFORNIA	SAN BERNARDINO COUNTY*	06071C8000F	03/18/1996
9	CALIFORNIA	SAN BERNARDINO COUNTY*	06071C8005F	03/18/1996
9	CALIFORNIA	SAN BERNARDINO COUNTY*	06071C8010F	03/18/1996
9	CALIFORNIA	SAN BERNARDINO COUNTY*	06071C8030F	03/18/1996
9	CALIFORNIA	SAN BERNARDINO COUNTY*	06071C8115F	03/18/1996
9	CALIFORNIA	SAN BERNARDINO COUNTY*	06071C8120F	03/18/1996
9	CALIFORNIA	SAN BERNARDINO COUNTY*	06071C8140F	03/18/1996
9	CALIFORNIA	SAN BERNARDINO COUNTY*	06071C8145F	03/18/1996
9	CALIFORNIA	SAN BERNARDINO COUNTY*	06071C8175F	03/18/1996
9	CALIFORNIA	SAN BERNARDINO COUNTY*	06071C8190F	03/18/1996
9	CALIFORNIA	SAN BERNARDINO COUNTY*	06071C8195F	03/18/1996
9	CALIFORNIA	SAN BERNARDINO COUNTY*	06071C8225F	03/18/1996
9	CALIFORNIA	SAN BERNARDINO COUNTY*	06071C8250F	03/18/1996
9	CALIFORNIA	SAN BERNARDINO COUNTY*	06071C8275F	03/18/1996
9	CALIFORNIA	SAN BERNARDINO COUNTY*	06071C8610F	03/18/1996
9	CALIFORNIA	SAN BERNARDINO COUNTY*	06071C8615F	03/18/1996
9	CALIFORNIA	SAN BERNARDINO COUNTY*	06071C8616F	03/18/1996
9	CALIFORNIA	SAN BERNARDINO COUNTY*	06071C8620F	03/18/1996
9	CALIFORNIA	SAN BERNARDINO COUNTY*	06071C8634F	03/18/1996
9	CALIFORNIA	SAN BERNARDINO COUNTY*	06071C8635F	03/18/1996
9	CALIFORNIA	SAN BERNARDINO COUNTY*	06071C8638F	03/18/1996
9	CALIFORNIA	SAN BERNARDINO COUNTY*	06071C8639F	03/18/1996
9	CALIFORNIA	SAN BERNARDINO COUNTY*	06071C8642F	03/18/1996
9	CALIFORNIA	SAN BERNARDINO COUNTY*	06071C8651F	03/18/1996
9	CALIFORNIA	SAN BERNARDINO COUNTY*	06071C8652F	03/18/1996
9	CALIFORNIA	SAN BERNARDINO COUNTY*	06071C8653F	03/18/1996
9	CALIFORNIA	SAN BERNARDINO COUNTY*	06071C8654F	03/18/1996
9	CALIFORNIA	SAN BERNARDINO COUNTY*	06071C8658F	03/18/1996
9	CALIFORNIA	SAN BERNARDINO COUNTY*	06071C8666F	03/18/1996
9	CALIFORNIA	SAN BERNARDINO COUNTY*	06071C8678F	03/18/1996
9	CALIFORNIA	SAN BERNARDINO COUNTY*	06071C8679F	03/18/1996
9	CALIFORNIA	SAN BERNARDINO COUNTY*	06071C8682F	03/18/1996
9	CALIFORNIA	SAN BERNARDINO COUNTY*	06071C8684F	03/18/1996
9	CALIFORNIA	SAN BERNARDINO COUNTY*	06071C8686F	03/18/1996
9	CALIFORNIA	SAN BERNARDINO COUNTY*	06071C8687F	03/18/1996
9	CALIFORNIA	SAN BERNARDINO COUNTY*	06071C8688F	03/18/1996
9	CALIFORNIA	SAN BERNARDINO COUNTY*	06071C8689F	03/18/1996
9	CALIFORNIA	SAN BERNARDINO COUNTY*	06071C8691F	03/18/1996
9	CALIFORNIA	SAN BERNARDINO COUNTY*	06071C8692F	03/18/1996
9	CALIFORNIA	SAN BERNARDINO COUNTY*	06071C8693F	03/18/1996
9	CALIFORNIA	SAN BERNARDINO COUNTY*	06071C8694F	03/18/1996
9	CALIFORNIA	SAN BERNARDINO COUNTY*	06071C8701F	03/18/1996
9	CALIFORNIA	SAN BERNARDINO COUNTY*	06071C8702F	03/18/1996
9	CALIFORNIA	SAN BERNARDINO COUNTY*	06071C8703F	03/18/1996
9	CALIFORNIA	SAN BERNARDINO COUNTY*	06071C8707F	03/18/1996
9	CALIFORNIA	SAN BERNARDINO COUNTY*	06071C8709F	03/18/1996
9	CALIFORNIA	SAN BERNARDINO COUNTY*	06071C8711F	03/18/1996
9	CALIFORNIA	SAN BERNARDINO COUNTY*	06071C8712F	03/18/1996
9	CALIFORNIA	SAN BERNARDINO COUNTY*	06071C8714F	03/18/1996
9	CALIFORNIA	SAN BERNARDINO COUNTY*	06071C8717F	03/18/1996
9	CALIFORNIA	SAN BERNARDINO COUNTY*	06071C8730F	03/18/1996
9	CALIFORNIA	SAN BERNARDINO COUNTY*	06071C8735F	03/18/1996
9	CALIFORNIA	SAN BERNARDINO COUNTY*	06071C8740F	03/18/1996
9	CALIFORNIA	SAN BERNARDINO COUNTY*	06071C8745F	03/18/1996
9	CALIFORNIA	SAN BERNARDINO COUNTY*	06071C8755F	03/18/1996
9	CALIFORNIA	SAN BERNARDINO COUNTY*	06071C8760F	03/18/1996
9	CALIFORNIA	SAN BERNARDINO COUNTY*	06071C8765F	03/18/1996
9	CALIFORNIA	SAN BERNARDINO COUNTY*	06071C8850F	03/18/1996

MAP REVISIONS—Continued

Region	State	Community	Panel number	Effective date
9	CALIFORNIA	SAN BERNARDINO COUNTY*	06071C8855F	03/18/1996
9	CALIFORNIA	SAN BERNARDINO COUNTY*	06071C8860F	03/18/1996
9	CALIFORNIA	SAN BERNARDINO COUNTY*	06071C8880F	03/18/1996
9	CALIFORNIA	SAN BERNARDINO COUNTY*	06071C8885F	03/18/1996
9	CALIFORNIA	SAN BERNARDINO COUNTY*	06071C8930F	03/18/1996
9	CALIFORNIA	SAN BERNARDINO COUNTY*	06071C8935F	03/18/1996
9	CALIFORNIA	SAN BERNARDINO COUNTY*	06071C8945F	03/18/1996
9	CALIFORNIA	SAN BERNARDINO COUNTY*	06071C8975F	03/18/1996
9	CALIFORNIA	SAN BERNARDINO COUNTY*	06071C9330F	03/18/1996
9	CALIFORNIA	SAN BERNARDINO COUNTY*	06071C9335F	03/18/1996
9	CALIFORNIA	SAN BERNARDINO COUNTY*	06071C9375F	03/18/1996
9	CALIFORNIA	SAN BERNARDINO, CITY OF	06071C0000	03/18/1996
9	CALIFORNIA	SAN BERNARDINO, CITY OF	06071C7910F	03/18/1996
9	CALIFORNIA	SAN BERNARDINO, CITY OF	06071C7930F	03/18/1996
9	CALIFORNIA	SAN BERNARDINO, CITY OF	06071C7935F	03/18/1996
9	CALIFORNIA	SAN BERNARDINO, CITY OF	06071C7940F	03/18/1996
9	CALIFORNIA	SAN BERNARDINO, CITY OF	06071C7942F	03/18/1996
9	CALIFORNIA	SAN BERNARDINO, CITY OF	06071C7944F	03/18/1996
9	CALIFORNIA	SAN BERNARDINO, CITY OF	06071C7945F	03/18/1996
9	CALIFORNIA	SAN BERNARDINO, CITY OF	06071C7961F	03/18/1996
9	CALIFORNIA	SAN BERNARDINO, CITY OF	06071C7963F	03/18/1996
9	CALIFORNIA	SAN BERNARDINO, CITY OF	06071C7965F	03/18/1996
9	CALIFORNIA	SAN BERNARDINO, CITY OF	06071C8676F	03/18/1996
9	CALIFORNIA	SAN BERNARDINO, CITY OF	06071C8677F	03/18/1996
9	CALIFORNIA	SAN BERNARDINO, CITY OF	06071C8678F	03/18/1996
9	CALIFORNIA	SAN BERNARDINO, CITY OF	06071C8679F	03/18/1996
9	CALIFORNIA	SAN BERNARDINO, CITY OF	06071C8681F	03/18/1996
9	CALIFORNIA	SAN BERNARDINO, CITY OF	06071C8682F	03/18/1996
9	CALIFORNIA	SAN BERNARDINO, CITY OF	06071C8683F	03/18/1996
9	CALIFORNIA	SAN BERNARDINO, CITY OF	06071C8684F	03/18/1996
9	CALIFORNIA	SAN BERNARDINO, CITY OF	06071C8691F	03/18/1996
9	CALIFORNIA	SAN BERNARDINO, CITY OF	06071C8692F	03/18/1996
9	CALIFORNIA	SAN BERNARDINO, CITY OF	06071C8701F	03/18/1996
9	CALIFORNIA	SAN BERNARDINO, CITY OF	06071C8702F	03/18/1996
9	CALIFORNIA	SAN BERNARDINO, CITY OF	06071C8703F	03/18/1996
9	CALIFORNIA	SANTA BARBARA COUNTY*	603310000	05/06/1996
9	CALIFORNIA	SANTA BARBARA COUNTY*	0603310100C	05/06/1996
9	CALIFORNIA	SANTA BARBARA COUNTY*	0603310250D	05/06/1996
9	CALIFORNIA	SANTA MARIA, CITY OF	603360000	05/06/1996
9	CALIFORNIA	SANTA MARIA, CITY OF	0603360005D	05/06/1996
9	CALIFORNIA	SANTA MARIA, CITY OF	0603360010D	05/06/1996
9	CALIFORNIA	TRINITY COUNTY*	06105C0000	04/17/1996
9	CALIFORNIA	TRINITY COUNTY*	06105C0170C	04/17/1996
9	CALIFORNIA	TRINITY COUNTY*	06105C0175C	04/17/1996
9	CALIFORNIA	TRINITY COUNTY*	06105C0505C	04/17/1996
9	CALIFORNIA	TRINITY COUNTY*	06105C0510D	04/17/1996
9	CALIFORNIA	TRINITY COUNTY*	06105C0595C	04/17/1996
9	CALIFORNIA	TRINITY COUNTY*	06105C0600C	04/17/1996
9	CALIFORNIA	TWENTYNINE PALMS, CITY OF	06071C0000	03/18/1996
9	CALIFORNIA	TWENTYNINE PALMS, CITY OF	06071C8175F	03/18/1996
9	CALIFORNIA	TWENTYNINE PALMS, CITY OF	06071C8190F	03/18/1996
9	CALIFORNIA	TWENTYNINE PALMS, CITY OF	06071C8195F	03/18/1996
9	CALIFORNIA	TWENTYNINE PALMS, CITY OF	06071C8225F	03/18/1996
9	CALIFORNIA	TWENTYNINE PALMS, CITY OF	06071C8930F	03/18/1996
9	CALIFORNIA	TWENTYNINE PALMS, CITY OF	06071C8935F	03/18/1996
9	CALIFORNIA	TWENTYNINE PALMS, CITY OF	06071C8975F	03/18/1996
9	CALIFORNIA	UPLAND, CITY OF	06071C0000	03/18/1996
9	CALIFORNIA	UPLAND, CITY OF	06071C7870F	03/18/1996
9	CALIFORNIA	UPLAND, CITY OF	06071C7875F	03/18/1996
9	CALIFORNIA	UPLAND, CITY OF	06071C7890F	03/18/1996
9	CALIFORNIA	UPLAND, CITY OF	06071C8608F	03/18/1996
9	CALIFORNIA	UPLAND, CITY OF	06071C8609F	03/18/1996
9	CALIFORNIA	UPLAND, CITY OF	06071C8610F	03/18/1996
9	CALIFORNIA	UPLAND, CITY OF	06071C8630F	03/18/1996
9	CALIFORNIA	VICTORVILLE, CITY OF	06071C0000	03/18/1996
9	CALIFORNIA	VICTORVILLE, CITY OF	06071C5790F	03/18/1996
9	CALIFORNIA	VICTORVILLE, CITY OF	06071C5795F	03/18/1996
9	CALIFORNIA	VICTORVILLE, CITY OF	06071C5805F	03/18/1996
9	CALIFORNIA	VICTORVILLE, CITY OF	06071C5810F	03/18/1996
9	CALIFORNIA	VICTORVILLE, CITY OF	06071C5815F	03/18/1996
9	CALIFORNIA	VICTORVILLE, CITY OF	06071C5820F	03/18/1996
9	CALIFORNIA	VICTORVILLE, CITY OF	06071C6480F	03/18/1996

MAP REVISIONS—Continued

Region	State	Community	Panel number	Effective date
9	CALIFORNIA	VICTORVILLE, CITY OF	06071C6485F	03/18/1996
9	CALIFORNIA	WALNUT CREEK, CITY OF	650700000	05/20/1996
9	CALIFORNIA	WALNUT CREEK, CITY OF	0650700001C	05/20/1996
9	CALIFORNIA	WALNUT CREEK, CITY OF	0650700002C	05/20/1996
9	CALIFORNIA	WALNUT CREEK, CITY OF	0650700003C	05/20/1996
9	CALIFORNIA	YUCAIPA, CITY OF	06071C0000	03/18/1996
9	CALIFORNIA	YUCAIPA, CITY OF	06071C8735F	03/18/1996
9	CALIFORNIA	YUCAIPA, CITY OF	06071C8740F	03/18/1996
9	CALIFORNIA	YUCAIPA, CITY OF	06071C8745F	03/18/1996
9	CALIFORNIA	YUCAIPA, CITY OF	06071C8765F	03/18/1996
9	CALIFORNIA	YUCCA VALLEY, TOWN OF	06071C0000	03/18/1996
9	CALIFORNIA	YUCCA VALLEY, TOWN OF	06071C8115F	03/18/1996
9	CALIFORNIA	YUCCA VALLEY, TOWN OF	06071C8120F	03/18/1996
9	CALIFORNIA	YUCCA VALLEY, TOWN OF	06071C8140F	03/18/1996
9	CALIFORNIA	YUCCA VALLEY, TOWN OF	06071C8855F	03/18/1996
9	CALIFORNIA	YUCCA VALLEY, TOWN OF	06071C8860F	03/18/1996
9	CALIFORNIA	YUCCA VALLEY, TOWN OF	06071C8880F	03/18/1996
10	OREGON	GRESHAM, CITY OF	4101810000	02/16/1996
10	OREGON	GRESHAM, CITY OF	4101810004F	02/16/1996
10	OREGON	LA GRANDE, CITY OF	4102600000	04/03/1996
10	OREGON	LA GRANDE, CITY OF	4102600001C	04/03/1996
10	OREGON	LA GRANDE, CITY OF	4102600002D	04/03/1996
10	OREGON	UNION COUNTY*	4102160000	04/03/1996
10	OREGON	UNION COUNTY*	4102160290C	04/03/1996
10	WASHINGTON	ALGONA, CITY OF	53033C0000	05/20/1996
10	WASHINGTON	AUBURN, CITY OF	53033C0000	05/20/1996
10	WASHINGTON	BEAUX ARTS VILLAGE, TOWN OF	53033C0000	05/20/1996
10	WASHINGTON	BELLEVUE, CITY OF	53033C0000	05/20/1996
10	WASHINGTON	BLACK DIAMOND, TOWN OF	53033C0000	05/20/1996
10	WASHINGTON	BOTHELL, CITY OF	53033C0000	05/20/1996
10	WASHINGTON	BURIEN, CITY OF	53033C0000	05/20/1996
10	WASHINGTON	CARNATION, TOWN OF	53033C0000	05/20/1996
10	WASHINGTON	CLYDE HILL, TOWN OF	53033C0000	05/20/1996
10	WASHINGTON	DES MOINES, CITY OF	53033C0000	05/20/1996
10	WASHINGTON	DUVALL, TOWN OF	53033C0000	05/20/1996
10	WASHINGTON	ENUMCLAW, CITY OF	53033C0000	05/20/1996
10	WASHINGTON	FEDERAL WAY, CITY OF	53033C0000	05/20/1996
10	WASHINGTON	HUNTS POINT, TOWN OF	53033C0000	05/20/1996
10	WASHINGTON	ISSAQUAH, CITY OF	53033C0000	05/20/1996
10	WASHINGTON	KENT, CITY OF	53033C0000	05/20/1996
10	WASHINGTON	KING COUNTY*	53033C0000	05/20/1996
10	WASHINGTON	KING COUNTY*	53033C0709G	05/20/1996
10	WASHINGTON	KING COUNTY*	53033C0710G	05/20/1996
10	WASHINGTON	KING COUNTY*	53033C0716G	05/20/1996
10	WASHINGTON	KING COUNTY*	53033C0717G	05/20/1996
10	WASHINGTON	KING COUNTY*	53033C0718G	05/20/1996
10	WASHINGTON	KING COUNTY*	53033C0719G	05/20/1996
10	WASHINGTON	KING COUNTY*	53033C1032G	05/20/1996
10	WASHINGTON	KIRKLAND, CITY OF	53033C0000	05/20/1996
10	WASHINGTON	LAKE FOREST PARK, CITY OF	53033C0000	05/20/1996
10	WASHINGTON	MEDINA, CITY OF	53033C0000	05/20/1996
10	WASHINGTON	MERCER ISLAND, CITY OF	53033C0000	05/20/1996
10	WASHINGTON	NORMANDY PARK, CITY OF	53033C0000	05/20/1996
10	WASHINGTON	NORTH BEND, CITY OF	53033C0000	05/20/1996
10	WASHINGTON	PACIFIC, CITY OF	53033C0000	05/20/1996
10	WASHINGTON	REDMOND, CITY OF	53033C0000	05/20/1996
10	WASHINGTON	RENTON, CITY OF	53033C0000	05/20/1996
10	WASHINGTON	SEATAC, CITY OF	53033C0000	05/20/1996
10	WASHINGTON	SEATTLE, CITY OF	53033C0000	05/20/1996
10	WASHINGTON	SKYKOMISH, TOWN OF	53033C0000	05/20/1996
10	WASHINGTON	SNOQUALMIE, CITY OF	53033C0000	05/20/1996
10	WASHINGTON	SNOQUALMIE, CITY OF	53033C0717G	05/20/1996
10	WASHINGTON	SNOQUALMIE, CITY OF	53033C0719G	05/20/1996
10	WASHINGTON	TUKWILA, CITY OF	53033C0000	05/20/1996
10	WASHINGTON	WOODINVILLE, CITY OF	53033C0000	05/20/1996
10	WASHINGTON	YARROW POINT, TOWN OF	53033C0000	05/20/1996

*Unincorporated areas only.

[FR Doc 96–25420 Filed 10–3–96; 8:45 am]

BILLING CODE 6718–04–P

FEDERAL HOUSING FINANCE BOARD

Sunshine Act Meeting; Announcing an Open Meeting of the Board

TIME AND DATES: 10:00 a.m. Wednesday, October 9, 1996.

PLACE: Board Room, Second Floor, Federal Housing Finance Board, 1777 F Street, N.W., Washington, D.C. 20006.

STATUS: The entire meeting will be open to the public.

MATTERS TO BE CONSIDERED DURING PORTIONS OPEN TO THE PUBLIC:

- Final Rule—Repeal of Section 934.9 (Budgets).
- Amendment to the Community Support Regulation.
- Proposed Rule—Affordable Housing Program.
- Federal Home Loan Bank of New York's Proposal to Certify the Dormitory Authority of the State of New York as a Nonmember Mortgagee.
- Federal Home Loan Bank of San Francisco Second Round 1996 District Priority for the Affordable Housing Program.

CONTACT PERSON FOR MORE INFORMATION: Elaine L. Baker, Secretary to the Board, (202) 408–2837.

Rita I. Fair,

Managing Director.

[FR Doc. 96–25666 Filed 10–02–96; 3:05 am]

BILLING CODE 8720–01–P

FEDERAL MARITIME COMMISSION

Notice of Agreement(s) Filed

The Federal Maritime Commission hereby gives notice of the filing of the following agreement(s) pursuant to section 5 of the Shipping Act of 1984.

Interested parties may inspect and obtain a copy of each agreement at the Washington, DC Office of the Federal Maritime Commission, 800 North Capitol Street, NW., 9th Floor. Interested parties may submit comments on each agreement to the Secretary, Federal Maritime Commission, Washington, D.C. 20573, within 10 days after the date of the Federal Register in which this notice appears. The requirements for comments are found in § 572.603 of Title 46 of the Code of Federal Regulations. Interested persons should consult this section before communicating with the Commission regarding a pending agreement.

Agreement No.: 217–011435–002.

Title: APL/TMM Space Charter Agreement.

Parties:

American President Lines, Ltd.

Transportacion Maritima Mexicana, S.A. de C.V.

Synopsis: The proposed amendment would extend the term of the Agreement through August 30, 1999.

Dated: September 30, 1996.

By order of the Federal Maritime Commission.

Joseph C. Polking,

Secretary.

[FR Doc. 96–25422 Filed 10–3–96; 8:45 am]

BILLING CODE 6730–01–M

FEDERAL RESERVE SYSTEM

Formations of, Acquisitions by, and Mergers of Bank Holding Companies

The companies listed in this notice have applied to the Board for approval, pursuant to the Bank Holding Company Act of 1956 (12 U.S.C. 1841 *et seq.*) (BHC Act), Regulation Y (12 CFR Part 225), and all other applicable statutes and regulations to become a bank holding company and/or to acquire the assets or the ownership of, control of, or the power to vote shares of a bank or bank holding company and all of the banks and nonbanking companies owned by the bank holding company, including the companies listed below.

The applications listed below, as well as other related filings required by the Board, are available for immediate inspection at the Federal Reserve Bank indicated. Once the application has been accepted for processing, it will also be available for inspection at the offices of the Board of Governors. Interested persons may express their views in writing on the standards enumerated in the BHC Act (12 U.S.C. 1842(c)). If the proposal also involves the acquisition of a nonbanking company, the review also includes whether the acquisition of the nonbanking company complies with the standards in section 4 of the BHC Act, including whether the acquisition of the nonbanking company can ''reasonably be expected to produce benefits to the public, such as greater convenience, increased competition, or gains in efficiency, that outweigh possible adverse effects, such as undue concentration of resources, decreased or unfair competition, conflicts of interests, or unsound banking practices'' (12 U.S.C. 1843). Any request for a hearing must be accompanied by a statement of the reasons a written presentation would not suffice in lieu of a hearing, identifying specifically any questions of fact that are in dispute, summarizing the evidence that would be presented at a hearing, and indicating how the party commenting would be aggrieved by approval of the proposal. Unless otherwise noted, nonbanking activities will be conducted throughout the United States.

Unless otherwise noted, comments regarding each of these applications must be received at the Reserve Bank indicated or the offices of the Board of Governors not later than October 28, 1996.

A. Federal Reserve Bank of St. Louis (Randall C. Sumner, Vice President) 411 Locust Street, St. Louis, Missouri 63166:

1. Owenton Bancorp, Inc. Employee Stock Ownership Trust, Owenton, Kentucky; to acquire an additional 5.74 percent, for a total of 39.59 percent, of the voting shares of Owenton Bancorp, Inc., Owenton, Kentucky, and thereby indirectly acquire Peoples Bank & Trust Company, Owenton, Kentucky.

Board of Governors of the Federal Reserve System, September 30, 1996.

Jennifer J. Johnson

Deputy Secretary of the Board

[FR Doc. 96–25483 Filed 10-3-96; 8:45 am]

BILLING CODE 6210-01-F

Notice of Proposals to Engage in Permissible Nonbanking Activities or to Acquire Companies that are Engaged in Permissible Nonbanking Activities

The companies listed in this notice have given notice under section 4 of the Bank Holding Company Act (12 U.S.C. 1843) (BHC Act) and Regulation Y, (12 CFR Part 225) to engage *de novo*, or to acquire or control voting securities or assets of a company that engages either directly or through a subsidiary or other company, in a nonbanking activity that is listed in § 225.25 of Regulation Y (12 CFR 225.25) or that the Board has determined by Order to be closely related to banking and permissible for bank holding companies. Unless otherwise noted, these activities will be conducted throughout the United States.

Each notice is available for inspection at the Federal Reserve Bank indicated. Once the notice has been accepted for processing, it will also be available for inspection at the offices of the Board of Governors. Interested persons may express their views in writing on the question whether the proposal complies with the standards of section 4 of the BHC Act, including whether consummation of the proposal can ''reasonably be expected to produce benefits to the public, such as greater convenience, increased competition, or gains in efficiency, that outweigh possible adverse effects, such as undue concentration of resources, decreased or unfair competition, conflicts of

interests, or unsound banking practices'' (12 U.S.C. 1843). Any request for a hearing on this question must be accompanied by a statement of the reasons a written presentation would not suffice in lieu of a hearing, identifying specifically any questions of fact that are in dispute, summarizing the evidence that would be presented at a hearing, and indicating how the party commenting would be aggrieved by approval of the proposal.

Unless otherwise noted, comments regarding the applications must be received at the Reserve Bank indicated or the offices of the Board of Governors not later than October 18, 1996.

A. Federal Reserve Bank of Kansas City (John E. Yorke, Senior Vice President) 925 Grand Avenue, Kansas City, Missouri 64198:

1. R. Banking Limited Partnership, and BancFirst Corporation, both of Oklahoma City, Oklahoma; to engage *de novo* through their subsidiary, BancFirst Corporation, Oklahoma City, Oklahoma, in general lending activities, including the making and servicing of loans, pursuant to § 225.25(b)(1) of the Board's Regulation Y.

Board of Governors of the Federal Reserve System, September 30, 1996.

Jennifer J. Johnson

Deputy Secretary of the Board

[FR Doc. 96–25484 Filed 10-3-96; 8:45 am]

BILLING CODE 6210-01-F

Sunshine Act Meeting

AGENCY HOLDING THE MEETING: Board of Governors of the Federal Reserve System.

TIME AND DATE: 10:00 a.m., Wednesday, October 9, 1996.

PLACE: Marriner S. Eccles Federal Reserve Board Building, C Street entrance between 20th and 21st Streets, N.W., Washington, D.C. 20551.

STATUS: Open.

MATTERS TO BE CONSIDERED:

1. Proposed report to Congress concerning check-related fraud pursuant to section 333 of the Community Banking Development Act of 1994.
2. Any items carried forward from a previously announced meeting.

Note: This meeting will be recorded for the benefit of those unable to attend. Cassettes will be available for listening in the Board's Freedom of Information Office, and copies may be ordered for $5 per cassette by calling (202) 452–3684 or by writing to: Freedom of Information Office, Board of Governors of the Federal Reserve System, Washington, D.C. 20551.

CONTACT PERSON FOR MORE INFORMATION: Mr. Joseph R. Coyne, Assistant to the Board; (202) 452–3204.

Dated: October 2, 1996.

Jennifer J. Johnson,

Deputy Secretary of the Board.

[FR Doc. 96–25601 Filed 10–2–96; 10:41 am]

BILLING CODE 6210–01–P

Sunshine Act Meeting

AGENCY HOLDING THE MEETING: Board of Governors of the Federal Reserve System.

TIME AND DATE: Approximately 10:30 a.m., Wednesday, October 9, 1996, following a recess at the conclusion of the open meeting.

PLACE: Marriner S. Eccles Federal Reserve Board Building, C Street entrance between 20th and 21st Streets, N.W., Washington, D.C. 20551.

STATUS: Closed.

MATTERS TO BE CONSIDERED:

1. Federal Reserve System management issues.
2. Personnel actions (appointments, promotions, assignments, reassignments, and salary actions) involving individual Federal Reserve System employees.
3. Any items carried forward from a previously announced meeting.

CONTACT PERSON FOR MORE INFORMATION: Mr. Joseph R. Coyne, Assistant to the Board; (202) 452–3204. You may call (202) 452–3207, beginning at approximately 5 p.m. two business days before this meeting, for a recorded announcement of bank and bank holding company applications scheduled for the meeting.

Dated: October 2, 1996.

Jennifer J. Johnson,

Deputy Secretary of the Board.

[FR Doc. 96–2502 Filed 10–2–96; 10:41 am]

BILLING CODE 6210–01–P

DEPARTMENT OF HEALTH AND HUMAN SERVICES

Statement of Organization, Functions and Delegations of Authority; Program Support Center

Part P, (Program Support Center) of the Statement of Organization, Functions and Delegation of Authority for the Department of Health and Human Services (60 FR 51480, October 2, 1995 as amended most recently at 61 FR 6015, February 15, 1996) is amended to reflect a realignment of functions within the Center which will consolidate information technology systems functions.

Program Support Center

Under *Part P, Section P–20, Functions*, change the following:

Under *Chapter PB, Human Resources Service (PB)*, delete the titles and functional statements for the *Systems Networking Division (PBH)* and the *Division of Human Resources Information Management (PBM)* in their entirety.

Under *Chapter PF, Information Technology Service (PF)*, insert the following titles and functional statements:

Systems Networking Division (PFF)

(1) Designs, obtains, installs, and maintains automatic data processing systems, including hardware, software, and data communications required to support the IMPACT system and the office automation activities of the HRS; (2) Provides automated data processing and distributed configuration management services for human resource computer systems located in the regional offices and the OPDIV personnel offices; (3) Provides the personnel offices with technical expertise in such areas as data communications, data center hardware and related equipment, data center operating systems, general purpose software, and data center management; (4) Schedules, operates and maintains the production processes in the Departmental personnel/payroll system; and (5) Produces and distributes output products including computer files, printed report and electronic transmissions for both internal, Departmental an external customer use.

Division of Human Resources Information Management (PFG)

(1) Provides ADP systems support to the health OPDIV personnel offices; (2) Provides human resources management information to the health OPDIVS in the form of reports, booklets, queries, files and graphics; (3) Designs, tests, maintains and provides security for applications systems and data bases which provides health OPDIVS with access to personnel/payroll information; (4) Manages the IMPACT level 2 system for the health OPDIVS in the Parklawn complex; (5) Manages ADP hardware, software, telecommunications, and network administration for human resource systems for health OPDIVS; and (6) Develops reports for tracking health OPDIV FTE ceilings and progress toward streamlining targets.

Under *Chapter PE, Administrative Operations Service (PE)*, after the heading *Division of Technical Support (PEF)*, delete the following words after

item (1), ''wide and local area network management and support'' * * *;

Under *Chapter PF, Information Technology Service (PF),* after the title for the *Division of Systems and Network Management (PFC),* delete item (2) in its entirety and insert a new item (2) as follows: ''(2) Evaluates, develops, and integrates multiple host computers, data communications processors, local area networks and general office automation and administrative systems to provide a nationwide data communications network with departmentwide connectivity.''

These organization changes are effective on October 1, 1996.

Dated: September 30, 1996.

Lynnda M. Regan,

Director, Program Support Center.

[FR Doc. 96–25480 Filed 10–3–96; 8:45 am]

BILLING CODE 4160–17–M

Food and Drug Administration

Advisory Committee Meeting; Amendment of Notice

AGENCY: Food and Drug Administration, HHS.

ACTION: Notice.

SUMMARY: The Food and Drug Administration (FDA) is announcing an amendment to the notice of a joint meeting of the Nonprescription Drugs Advisory Committee and the Pulmonary-Allergy Drugs Advisory Committee, which is scheduled for October 10 and 11, 1996. This meeting was announced in the Federal Register of September 24, 1996 (61 FR 50031 at 50032). The amendment is being made to announce the cancellation of the entire session on October 11, 1996. There are no other changes. This amendment will be announced at the beginning of the open portion of the meeting.

–FOR FURTHER INFORMATION CONTACT: Kennerly K. Chapman or Leander B. Madoo, Center for Drug Evaluation and Research (HFD–21), Food and Drug Administration, 5600 Fishers Lane, Rockville, MD 20857, 301–443–5455, or FDA Advisory Committee Information Hotline, 1–800–741–8138 (301–443–0572 in the Washington, DC area), Nonprescription Drugs Advisory Committee, code 12541.

SUPPLEMENTARY INFORMATION: In the Federal Register of September 24, 1996, FDA announced that a joint meeting of the Nonprescription Drugs Advisory Committee and the Pulmonary-Allergy Drugs Advisory Committee would be held on October 10 and 11, 1996.

On page 50032, in the third column, the agenda for this meeting is amended as follows:

–*Date, time, and place.* October 10, 1996, 8:30 a.m., Holiday Inn—Bethesda, Versailles Ballroom, 8120 Wisconsin Ave., Bethesda, MD.

–*Type of meeting and contact person.* Open public hearing, October 10, 1996, 8:30 a.m. to 9:30.m., unless public participation does not last that long; open committee discussion, 9:30 a.m. to 5 p.m.

–*Open committee discussion.* On October 10, 1996, the committees will jointly consider new drug application (NDA) 20–463, Nasalcrom® (Cromolyn Sodium Nasal Solution, USP) for over-the-counter (OTC) treatment of seasonal allergic rhinitis sponsored by McNeil Consumer Products Co.––––––––––––

Dated: September 27, 1996.

Michael A. Friedman,

Deputy Commissioner for Operations.

[FR Doc. 96–25481 Filed 10–3–96; 8:45 am]

BILLING CODE 4160–01–F

Health Resources and Services Administration

Program Announcement and Proposed Review Criteria and Indicators for Grants for Primary Care Training for Fiscal Year 1997

The Health Resources and Services Administration (HRSA) announces that applications will be accepted for fiscal year (FY) 1997 Grants for Primary Care Training funded under the authority of sections 747(a) and (b), section 748, section 750, and section 751, Title VII of the Public Health Service Act (the Act), as amended by the Health Professions Education Extension Amendments of 1992, Pub. L. 102–408, dated October 13, 1992. These grant programs include:

Grants for Predoctoral Training in Family Medicine
Grants for Faculty Development in Family Medicine
Grants for Establishment of Departments of Family Medicine
Grants for Graduate Training in Family Medicine
Grants for Residency Training in General Internal Medicine and General Pediatrics
Grants for Faculty Development in General Internal Medicine and General Pediatrics
Grants for Physician Assistant Training
Grants for Podiatric Primary Care Residency Training

This program announcement is subject to reauthorization of the legislative authority and to the appropriation of funds. Applicants are advised that this program announcement is a contingency action being taken to assure that, should authority and funds become available for this purpose, they can be awarded in a timely fashion consistent with the needs of the program as well as to provide for even distribution of funds throughout the fiscal year. At this time, due to the absence of FY 1997 appropriations for Title VII programs, the amount of available funding for these specific grant programs is unknown. Listed below are the average award amounts for the primary care programs in FY 1996:

Predoctoral Training in Family Medicine	$115,000
Faculty Development in Family Medicine	142,000
Establishment of Departments of Family Medicine	161,000
Graduate Training in Family Medicine	107,000
Residency Training in General Internal Medicine and General Pediatrics	201,000
Faculty Development in General Internal Medicine and General Pediatrics	157,000
Physician Assistant Training	135,000
Podiatric Primary Care Residency Training	90,357

Table 1 summarizes the programs, legislative authorities, and eligibility requirements covered by this announcement.

TABLE 1.—LEGISLATIVE AUTHORITY

Program CFDA number regulations	Authority PHS act	Program purpose	Eligible entity
Departments of Family Medicine, 93.984, 42 CFR, part 57, subpart R.	Section 747(b)	Establish, maintain, or improve family medicine academic administrative units (which may be departments, divisions, or other units) to provide clinical instruction in family medicine. Funds awarded will be used to: (1) Plan and develop model educational predoctoral, faculty development and graduate medical education programs in family medicine which will meet the requirements of section 747(a), by the end of the project period of section 747(b) support; and (2) support academic and clinical activities relevant to the field of family medicine. Operational programs applying for support of established activities in predoctoral, faculty development, or graduate medical education should apply under section 747(a). The program may also assist schools to strengthen the administrative base and structure that is responsible for the planning, direction, organization, coordination, and evaluation of all undergraduate and graduate family medicine activities. Funds are to complement rather than duplicate programmatic activities for actual operation of family medicine training programs under section 747(a).	Public, or private nonprofit, accredited schools of medicine or osteopathic medicine.
Graduate Training in Family Medicine, 93.379, 42 CFR, part 57, subpart Q.	Section 747(a)	Planning, developing, and operating or participating in approved graduate training programs in the field of Family Medicine. In addition, Section 747 (a) authorizes assistance in meeting the cost of supporting trainees in such programs who plan to specialize or work in the practice of Family Medicine.	Accredited schools of medicine or osteopathic medicine, public or private nonprofit hospitals, or other public or private nonprofit entities.
Predoctoral Training in Family Medicine, 93.896, 42 CFR, part 57, subpart Q.	Section 747(a)	Planning, developing, and operating or participating in approved predoctoral training programs in the field of family medicine. Grants may include support for the program only or support for both the program and the trainees.	Public, or private nonprofit, accredited schools of medicine or osteopathic medicine.
Faculty Development in Family Medicine, 93.895, 42 CFR, part 57, subpart Q.	Section 747(a)	Planning, developing, and operating programs for the training of physicians who plan to teach in family medicine training programs. These grants are intended to promote the development of faculty skills in physicians who are currently teaching or who plan teaching careers in family medicine training programs. These grants also provide financial assistance in meeting the cost of supporting physicians who are trainees in such programs.	Accredited schools of medicine or osteopathic medicine, public or private nonprofit hospitals, or other public or private nonprofit entities.
Residency Training in General Internal Medicine & General Pediatrics, 93.884, 42 CFR, part 57, subpart FF.	Section 748	Planning, developing, and operating or participating in approved graduate training programs in the fields of General Internal Medicine or General Pediatrics. In addition, Section 748 authorizes assistance in meeting the cost of supporting trainees in such programs who plan to specialize or work in the practice of General Internal Medicine or General Pediatrics. Unlike residencies in internal medicine and pediatrics from which many physicians enter subspecialty training, programs supported by these grants are intended to emphasize continuity and ambulatory, preventive and psychosocial aspects of the practice of medicine. Grant funds may support the creation of new residency positions or facilitate the conversion of ''traditional'' programs to those in which the training emphasizes the provision of longitudinal, preventive, and comprehensive care.	Accredited schools of medicine or osteopathic medicine, public or private nonprofit hospitals, or other public or private nonprofit entities.
Faculty Development in General Internal Medicine & General Pediatrics, 93.900, 42 CFR, part 57, subpart FF.	Section 748	Planning, developing and operating programs for the training of physicians who plan to teach in general internal medicine or general pediatrics training programs. These grants are intended to promote the development of faculty skills in physicians who are currently teaching or who plan teaching careers in general internal medicine or general pediatrics training programs. These grants also provide financial assistance in meeting the cost of supporting physicians who are trainees in such programs.	Accredited schools of medicine or osteopathic medicine, public or private nonprofit hospitals, or other public or private nonprofit entities.

TABLE 1.—LEGISLATIVE AUTHORITY—Continued

Program CFDA number regulations	Authority PHS act	Program purpose	Eligible entity
Podiatric Primary Care Residency Training, 93.181.	Section 751	Planning and implementing projects in primary care training for podiatric physicians in approved or provisionally approved residency programs, which shall provide financial assistance in the form of traineeships to residents who participate in such projects and who plan to specialize in primary care.	Schools of podiatric medicine or public or private nonprofit hospitals. ''Candidate status'' will be accepted as meeting the statutory requirement for ''provisional approval.''
Physician Assistant Training, 93.886, 42 CFR, part 57, subpart H.	Section 750	Planning, developing, and operating or maintaining programs for the training of physician assistants and for training faculty to teach in such programs as defined under section 799(3) of the Public Health Service Act.	Accredited schools of medicine or osteopathic medicine or other public or private nonprofit entities. Eligible physician assistant programs are those which are either accredited by the American Medical Association's Committee on Allied Health Education and Accreditation (AMA–CAHEA) or its successor organization, the Commission on Accreditation of Allied Health Education Programs (CAAHEP).

Review Criteria

The review criteria have been established in 42 CFR, part 57, subparts Q, R, and FF. The following criteria are being proposed to be applied to Physician Assistant and Podiatric programs. Weighted indicators for the review criteria were established in 60 FR 2976, dated January 12, 1995. Consistent with streamlining efforts throughout the Government, the proposed indicators for FY 1997 have been revised to reduce the number and reflect program priorities. The review criteria will be applied to all applications received in response to this notice for funding during FY 1997. The maximum score point potential is 200.

TABLE 2.—GRANT PROPOSAL REVIEW CRITERIA

Indicator	Review factors
Criterion 1: Potential Effectiveness of the Proposed Project in Carrying Out the Training Purposes of Sections 747, 748, 750, and 751 of the PHS Act. **Maximum Points: 60 points**	
Indicator 1: Workforce Diversity: 15 Points.	Proposal includes a strategy and plan for recruiting and retaining underrepresented minority and disadvantaged faculty, students, trainees and/or residents. Proposal describes the current and projected levels of participation of these underrepresented groups in the program. Applicants are expected to reflect the diversity of the populations within their States.
Indicator 2—Generalist Faculty: 10 points.	Proposal includes clinically oriented, generalist-trained faculty (faculty trained in any of the primary care disciplines of family medicine, general internal medicine, and general pediatrics or primary care physician assistants or primary care podiatrists) who practice in community-based settings that include underserved populations.
Indicator 3—Training Emphasis: 15 points.	Proposal includes a curriculum that emphasizes areas of study pertinent to the needs of special populations in urban, rural, and underserved areas. Special population groups include people with low incomes, members of racial and ethnic minority groups, people with disabilities, and at-risk population groups to whom a broad range of health care services is made available. The curriculum should be culturally competent regarding ethnicity, gender, age, and sexual orientation and be population-based whether that population is urban, rural or underserved. The curriculum should acknowledge and demonstrate responsiveness to a wide range of local health care needs at the community and/or State level. There are clearly demonstrated relationships between teaching institutions and community-based provider organizations to assure adequate clinical experiences. Applicants should describe organizational relationships established between health profession programs, schools, teaching hospitals, and other organizations involved in the training of health care providers, formed to meet the educational needs of the providers and to address the needs of the health care delivery system through collaboration with provider organizations that are community-based, participating in managed care, and/or serving underserved areas.
Indicator 4—Curricular Innovation: 10 points.	Proposal describes the actions taken by the institution that demonstrate faculty involvement with the curricular innovations that are beyond what is traditionally part of such a curriculum. Elements of the curriculum must be at the cutting edge of educational strategies and/or content. Specific examples include, but are not limited to, the incorporation of information technology in training activities, significant interdisciplinary education, and curricular elements focusing on additional competencies for practice in evolving delivery systems (e.g., managed care plans).

TABLE 2.—GRANT PROPOSAL REVIEW CRITERIA—Continued

Indicator	Review factors
Indicator 5—Generalist Outcomes: 10 points.	Proposal includes data regarding the most recent three-year average track record of a program in placing graduates in primary care training, primary care practice, or generalist faculty positions. For Family Medicine Predoctoral and Establishment of Departments programs, this requires at least 15 percent of medical school graduates to enter family medicine residencies. For graduates of Faculty Development programs, this requires 80 percent of full-time fellows post-fellowship to serve at least 50 percent time as generalist faculty. For general internal medicine, general pediatrics, and family medicine residency graduates, and physician assistant or podiatry graduates this requires at least 80 percent of graduates to enter primary care practice. Programs in existence for less than three years must provide data for all years since their establishment, their proposed strategies for achieving the levels described in the indicator, and their projected level of achievement with respect to the generalist outcomes.
.....	For general internal medicine and general pediatrics, if the applicant's primary care track has been in existence for three or more years, the applicant should report data on the primary care track alone. If the applicant's primary care track has been in existence less than three years, and the traditional program three or more years, the applicant should report combined data on the traditional and primary care tracks.
Criterion 2: Administrative and Management Ability of the Applicant to Carry Out the Proposed Project in a Cost-Effective Manner **Maximum Points: 80 points**	
Indicator 1: 80 Points	This section should address the project need and rationale, project objectives and methodology for each objective, budget justification, evaluation plan for each objective, anticipated problems and possible solutions in implementing the proposed project, and institutional collaboration and letters of support.
Criterion 3: Economic Viability Maximum Points: 20 points	
Indicator 1: 20 Points	This section should address institutional, State, and other non-Federal support for the project that will continue after cessation of Federal funding.
Criterion 4: Project Requirements Maximum Points: 40 points	
Indicator 1: 40 Points	All project requirements specific to the program for which grant funds are requested must be addressed in this section. Applicants for Grants for Graduate Training in Family Medicine may satisfy this requirement by including a letter of accreditation from the ACGME/RRC or a letter of approval from the AOA verifying that the residency meets all requirements. To the extent that problems are noted by the accrediting body, the application must address the problems and present a plausible plan for their correction. Applicants must address each Project Requirement if a letter of accreditation or approval is not included in application.

Interested individuals are invited to comment on the proposed review criteria for the programs Physician Assistant Training and Podiatric Primary Care Residency Training. The proposed indicators are for all the grant programs.

The comment period is 30 days. All comments received on or before (Insert date 30 days from date of publication in the Federal Register) will be considered before the final review criteria and indicators are established.

Written comments should be addressed to: Dr. Enrique Fernandez, Director, Division of Medicine, Bureau of Health Professions, Health Resources and Services Administration, Parklawn Building, Room 9A–27, 5600 Fishers Lane, Rockville, MD 20857.

All comments received will be available for public inspection and copying at the Division of Medicine, at the above address, weekdays (Federal holidays excepted) between the hours of 8:30 a.m. and 5:00 p.m.

Other Considerations

In addition to the review criteria listed above, funding preferences may be applied in determining funding of approved applications. A funding preference is defined as the funding of a specific category or group of approved applications ahead of other categories or groups of approved applications in a discretionary program. It is not required that applicants request consideration for a funding preference. Applications which do not include a request for consideration for funding preferences will be reviewed and given full consideration for funding. The funding preferences to be applied to awards made under this Program Announcement are defined below.

Statutory General Preference

All of the training grant programs described in this Program Announcement are subject to the statutory general preference. As provided in section 791(a) of the PHS Act, statutory preference will be given to any qualified applicant that:

(A) Has a High Rate for placing graduates in practice settings having the principal focus of serving residents of medically underserved communities; or

(B) during the 2-year period preceding the fiscal year for which such an award is sought, has achieved a Significant Increase in the rate of placing graduates in such settings.

This statutory general preference will only be applied to applications that rank above the 20th percentile of applications recommended for approval by the peer review group. In Table 3, the definitions of ''High Rate'' and ''Significant Increase in the Rate'' are presented as they are applied to each program.

Additional general information regarding the implementation of the statutory general preference has been published in the Federal Register at 59 FR 15741, dated April 4, 1994.

TABLE 3.—DEFINITIONS FOR THE STATUTORY GENERAL PREFERENCES—ALL PROGRAMS

Program	Definition of ''Graduate''	Definition of ''High Rate''	Definition of ''Significant Increase in Rate''
Family Medicine Programs:			
(1) Predoctoral Training & Family Medicine Departments.	(1) For Predoctoral Training and Family Medicine Departments programs, the term means all PGY4 graduates of the applicant institution who have completed successfully a residency in any specialty.	(1) A minimum of 20% of the graduates from academic year 1991–92 or 1992–93, whichever is greater, spend at least 50% of their time in clinical practice in the specified settings.	(1) Between academic years 1991–92 and 1992–93, the rate of placing graduates in the specified settings has increased by at least 50% and not less than 15% of 1992–93 graduates work in such settings.
(2) Faculty Development	(2) For Faculty Development programs, the term means all graduates of the fellowship and/or faculty development program.	(2) A minimum of 20% of the graduates from academic year 1994–95 or 1995–96, whichever is greater, spend at least 50% of their time in the specified settings.	(2) Between academic years 1994–95 and 1995–96, the rate of placing graduates in the specified settings has increased by at least 50% and not less than 15% of 1995–96 graduates work in such settings.
(3) Graduate Training	(3) For Graduate Training programs, the term means all graduates of the family medicine residency program.	(3) A minimum of 25% of *all* residency graduates from academic years 1993–94, 1994–95, and 1995–96 spend at least 50% of their time in clinical practice in the specified settings.	(3) Between academic years 1994–95 and 1995–96 the rate of placing graduates in the specified settings has increased by at least 50% and not less than 15% of 1995–96 graduates work in such settings.

TABLE 3A.—DEFINITIONS FOR THE STATUTORY GENERAL PREFERENCES—ALL PROGRAMS

Program	Definition of ''Graduate''	Definition of ''High Rate''	Definition of ''Significant Increase in Rate''
General Internal Medicine and General Pediatrics Programs:			
(1) Graduate Training Programs.	(1) For Graduate Training programs, the term means all graduates of the general internal medicine or general pediatrics residency program.	(1) A minimum of 25% of *all* residency graduates from academic years 1993–94, 1994–95, and 1995–96 spend at least 50% of their time in clinical practice in the specified settings.	(1) Between academic years 1994–95 and 1995–96, the rate of placing graduates in the specified settings has increased by at least 50% and not less than 15% of the 1995–96 graduates work in such settings.
(2) Faculty Development Programs.	(2) For Faculty Development programs, the term means all graduates of the fellowship and/or faculty development program.	(2) A minimum of 20% of the graduates from academic year 1994–95 or 1995–96, whichever is greater, spend at least 50% of their time in the specified settings.	(2) Between academic years 1994–95 and 1995–96, the rate of placing graduates in the specified settings has increased by at least 50% and not less than 15% of 1995–96 graduates work in such settings.
Podiatry Training Programs	An individual who has completed successfully all training and residency requirements necessary for full certification in the specified health profession.	A minimum of 25% of *all* podiatric primary care residency graduates from academic years 1993–94, 1994–95, and 1995–96 spend at least 50% of their time in clinical practice in the specified settings..	Between academic years 1994–95 and 1995–96, the rate of placing graduates in the specified settings has increased by at least 50% and not less than 15% of 1995–96 graduates work in such settings.
Physician Assistant Training Programs.	An individual who has completed successfully all training requirements from an American Medical Association-approved Physician Assistant Training Program.	A minimum of 20% of the physician assistant program graduates from academic years 1994–95 or 1995–96, whichever is greater, spend at least 50% of their time in clinical practice in the specified settings.	Between academic year 1994–95 and 1995–96, the rate of placing graduates in the specified settings has increased by at least 50% and not less than 15% of 1995–96 graduates work in such settings.

Alternative Ways of Meeting the Statutory General Preference

A new school or program is defined as having graduated less than three classes. A new program will qualify for the general funding preference if four or more of the following criteria are met:

1. The mission statement of the program identifies a specific purpose of preparing health processionals to serve underserved populations.

2. The curriculum includes content which will help to prepare practitioners to serve underserved populations.

3. Substantial clinical training experience is required in medically underserved communities.

4. A minimum of 20 percent of the faculty spend at least 50 percent of their time providing/supervising care in medically underserved communities.

5. The entire program or a substantial portion of the program is physically located in a medically underserved community.

6. Student assistance, which is linked to service in medically underserved communities following graduation, is available to the students in the program.

7. The program provides a placement mechanism for deploying graduates to medically underserved communities.

In FY 1997, new programs can qualify for the general preference by providing assurance that a minimum percent of their prospective graduates have signed commitments to practice in medically underserved communities after graduation. This minimum percent will be equal to the minimum percentage for ''high rate.''

Additional Statutory Funding Preference for the Establishment of Departments of Family Medicine

An additional statutory funding preference applies only to Grants for the Establishment of Departments of Family Medicine. Under section 747(b), a funding preference is provided for qualified applicants that agree to expend the award for the purpose of:

(1) Establishing an academic administrative unit defined as a department, division, or other unit, for programs in family medicine; or

(2) substantially expanding the programs of such a unit.

Additional Statutory Funding Preference for the Grants for Podiatric Primary Care Residency Training

An additional statutory funding preference applies only to Grants for Podiatric Primary Care Residency Training. Under section 751(b), a funding preference is provided for qualified applicants that provide clinical training in podiatric medicine in a variety of medically underserved communities.

Information Requirements Provision

All of the training grant programs discussed in this Announcement are subject to the information requirements provision. Under section 791(b) of the Act, the Secretary may make an award under certain title VII grant programs only if the applicant for the award submits to the Secretary the following required information:

1. A description of rotations or preceptorships for students, or clinical training programs for residents, that have the principal focus of providing health care to medically underserved communities.

2. The number of faculty on admissions committees who have a clinical practice in community-based ambulatory settings in medically underserved communities.

3. With respect to individuals who are from disadvantaged backgrounds or from medically underserved communities, the number of such individuals who are recruited for academic programs of the applicant, the number of such individuals who are admitted to such programs, and the number of such individuals who graduate from such programs.

4. If applicable, the number of recent graduates who have chosen careers in primary health care.

5. The number of recent graduates whose practices are serving medically underserved communities.

6. A description of whether and to what extent the applicant is able to operate without Federal assistance under this title. Additional details concerning the implementation of this information requirement have been published in the Federal Register at 58 FR 43642, dated August 17, 1993, and will be provided in the application materials.

Application Submission Deadlines

The deadline date for receipt of applications for each of these grant programs is shown in Table 4 below. Applications will be considered to be ''on time'' if they are either:

(1) Received on or before the established deadline date, or

(2) Sent on or before the established deadline date and received in time for orderly processing. (Applicants should request a legibly dated U.S. Postal Service postmark or obtain a legibly dated receipt from a commercial carrier or U.S. Postal Service. Private metered postmarks shall not be acceptable as proof of timely mailing.)

TABLE 4.—CONTACT NAMES, LENGTH OF SUPPORT, AND DEADLINE DATES

PHS Title VII section number/program title/ CFDA number	Grants management contact/phone number/E-Mail address FAX: (301) 443–6343	Programmatic contact/phone number FAX: (301) 443–1945	Length of support (years)	Application deadline
747(a), Graduate Training in Family Medicine, 93.379.	Brenda Selser 301–443–6960 bselser@hrsa.ssw.dhhs.gov	Edward Spirer 301–443–3456 espirer@hrsa.ssw.dhhs.gov	3	11/29/96
747(a), Predoctoral Training in Family Medicine, 93.896.	Brenda Selser 301–443–6960 bselser@hrsa.ssw.dhhs.gov	Betty Ball 301–443–3616 bball@hrsa.ssw.dhhs.gov	3	12/03/96
747(a), Faculty Development in Family Medicine, 93.895.	Brenda Selser 301–443–6960 bselser@hrsa.ssw.dhhs.gov	Elsie Quinones 301–443–6822 equinone@hrsa.ssw.dhhs.gov	3	12/06/96
747(b), Departments of Family Medicine, 93.984.	Brenda Selser 301–443–6960 bselser@hrsa.ssw.dhhs.gov	Shelby Biedenkapp 301–443–3615 sbiedenk@hrsa.ssw.dhhs.gov	3	02/24/97
748, Residency Training in Gen. Int. Medicine & Pediatrics, 93.884.	Brenda Selser 301–443–6960 bselser@hrsa.ssw.dhhs.gov	Brenda Williamson 301–443–6821 bwilliam@hrsa.ssw.dhhs.gov	3	12/02/96
748, Faculty Development in Gen. Int. Medicine & Pediatrics, 93.900.	Brenda Selser 301–443–6960 bselser@hrsa.ssw.dhhs.gov	Elsie Quinones 301–443–6822 equinone@hrsa.ssw.dhhs.gov	3	12/09/96
751, Podiatric Primary Care Residency Training, 93.181.	Brenda Selser 301–443–6960 bselser@hrsa.ssw.dhhs.gov	Edward Spirer 301–443–3456 espirer@hrsa.ssw.dhhs.gov	3	01/23/97
750, Physician Assistant Training, 93.886.	Brenda Selser 301–443–6960 bselser@hrsa.ssw.dhhs.gov	Edward Spirer 301–443–3456 espirer@hrsa.ssw.dhhs.gov	3	01/27/97

National Health Objectives for the Year 2000

The Public Health Service urges applicants to submit work plans that address specific objectives of Healthy People 2000. Potential applicants may obtain a copy of Healthy People 2000 (Full Report; Stock No. 017–001–00474–0) or Healthy People 2000 (Summary Report; Stock No. 017–001–00473–1) through the Superintendent of Documents, Government Printing

Office, Washington, DC 20402–9325 (Telephone 202–783–3238).

Academic and Community Partnerships

As part of its cross-cutting program priorities, HRSA will be targeting its efforts to strengthening linkages between U.S. Public Health Service education programs and programs which provide comprehensive primary care services to the underserved.

Smoke-Free Workplace

The Public Health Service strongly encourages all grant recipients to provide a smoke-free workplace and to promote the non-use of all tobacco products and Public Law 103–227, the Pro-Children Act of 1994, prohibits smoking in certain facilities that receive Federal funds in which education, library, day care, health care, and early childhood development services are provided to children.

Paperwork Reduction Act

The standard application form PHS 6025–1, HRSA Competing Training Grant Application, General Instructions and supplement for these grant programs have been approved by the Office of Management and Budget under the Paperwork Reduction Act. The OMB Clearance Number is 0915–0060.

Application Availability

Application materials are available on the World Wide Web at address: ''http://www.hrsa.dhhs.gov/bhpr/grants.html''. In Fiscal Year 1997, the Bureau of Health Professions (BHPr) will use Adobe Acrobat to publish the grants documents on the Web page. In order to download, view and print these grants documents, you will need a copy of Adobe Acrobat Reader. This can be obtained without charge from the Internet by going to the Adobe Web page (''http://www.adobe.com'') and downloading the version of the Adobe Acrobat Reader which is appropriate for your operating system, i.e., Windows, Unix, Macintosh, etc. A set of more detailed instructions on how to download and use the Adobe Acrobat Reader can be found on the BHPr Grants Web page under ''Notes on this WWW Page.''

If additional programmatic information is needed, please contact the Division of Medicine, Bureau of Health Professions, Health Resources and Services Administration, Parklawn Building, Room 9A–20, 5600 Fishers Lane, Rockville, Maryland 20857. Questions regarding grants policy and business management issues should be directed to the Grants Management Branch in Room 8C–26 at the above address. Please refer to Table 4 for specific BHPr contact names and phone numbers.

For applicants who are unable to access application materials electronically, a hard copy will be provided by contacting the HRSA Grants Application Center. The Center may be contacted by: Telephone Number: 1–888–300–HRSA, FAX Number: 301–309–0579, Email Address: HRSA.GAC@ix.netcom.com. Completed applications should be returned to: Grants Management Officer (CFDA#), HRSA Grants Application Center, 40 West Gude Drive, Suite 100, Rockville, Maryland 20850.

Grant programs for primary care training are not subject to the provisions of Executive Order 12372, Intergovernmental Review of Federal Programs (as implemented through 45 CFR part 100). Also, these grant programs are not subject to the Public Health System Reporting Requirements.

Dated: September 30, 1996.

Ciro V. Sumaya,

Administrator.

[FR Doc. 96–25429 Filed 10–3–96; 8:45 am]

BILLING CODE 4160–15–P

Advisory Council; Notice of Meeting

In accordance with section 10(a)(2) of the Federal Advisory Committee Act (Public Law 92–463), announcement is made of the following National Advisory body scheduled to meet during the month of October 1996:

Name: National Advisory Council on Migrant Health

Date & Time: Starts: Thursday, October 31, 1996 at 9:00 a.m.; Ends: Saturday, November 2, 1995 at 6:00 p.m.

Place: Best Western Innsuites Hotel, 1450 Castle Dome Avenue, Yuma, Arizona, 520/783–8341.

The meeting is open to the public.

Agenda: The agenda includes a overview of Council general business activities and priorities; the discussion of current and development of future NACMH Recommendations. A Public Hearing for Section 329 grantees and other organizations is scheduled for Friday, Nov. 1, 2:00 p.m.–5:00 p.m., and a Farmworker Public Hearing is scheduled for Saturday, Nov. 2, 9:00 a.m.–5:00 p.m. at the above hotel. The Council is soliciting oral and written comments for testimony; specific to migrant/seasonal farmworker health and migrant health program issues.

Anyone requiring information regarding the subject Council should contact Susan Hagler, Migrant Health Program, Staff Support to the National Advisory Council on Migrant Health, Bureau of Primary Care, Health Resources and Services Administration, 4350 East West Highway, Room 7–A51, Bethesda, Maryland 20814, Telephone (301) 594–4302.

Agenda Items are subject to change as priorities dictate.

Dated: September 30, 1996.

Jackie E. Baum,

Advisory Committee Management Officer, HRSA.

[FR Doc. 96–25479 Filed 10–3–96; 8:45 am]

BILLING CODE 4160–15–P

National Vaccine Injury Compensation Program; List of Petitions Received

AGENCY: Health Resources and Services Administration, HHS.

ACTION: Notice.

SUMMARY: The Health Resources and Services Administration (HRSA) is publishing this notice of petitions received under the National Vaccine Injury Compensation Program (''the Program''), as required by section 2112(b)(2) of the Public Health Service (PHS) Act, as amended. While the Secretary of Health and Human Services is named as the respondent in all proceedings brought by the filing of petitions for compensation under the Program, the United States Court of Federal Claims is charged by statute with responsibility for considering and acting upon the petitions.

FOR FURTHER INFORMATION CONTACT: For information about requirements for filing petitions, and the Program generally, contact the Clerk, United States Court of Federal Claims, 717 Madison Place, N.W., Washington, D.C. 20005, (202) 219–9657. For information on the Health Resouces and Services Administration's role in the Program, contact the Director, National Vaccine Injury Compensation Program, 5600 Fishers Lane, Room 8A35, Rockville, MD 20857, (301) 443–6593.

SUPPLEMENTARY INFORMATION: The Program provides a system of no-fault compensation for certain individuals who have been injured by specified childhood vaccines. Subtitle 2 of title XXI of the PHS Act, 42 U.S.C. 300aa–10 *et seq,* provides that those seeking compensation are to file a petition with the U.S. Court of Federal Claims and to serve a copy of the petition on the Secretary of Health and Human Services, who is named as the respondent in each proceeding. The Secretary has delegated her responsibility under the Program to HRSA. The Court is directed by statute to appoint special masters who take evidence, conduct hearings as appropriate, and make initial decisions as to eligibility for, and amount of, compensation.

A petition may be filed with respect to injuries, disabilities, illnesses, conditions, and deaths resulting from vaccines described in the Vaccine Injury

Table (the Table) set forth at section 2114 of the PHS Act or as set forth at 42 CFR 100.3, as applicable. This Table lists for each covered childhood vaccine the conditions which will lead to compensation and, for each condition, the time period for occurrence of the first symptom or manifestation of onset or of significant aggravation after vaccine administration. Compensation may also be awarded for conditions not listed in the Table and for conditions that are manifested after the time periods specified in the Table, but only if the petitioner shows that the condition was caused by one of the listed vaccines.

Section 2112(b)(2) of the PHS Act, 42 U.S.C. 300aa–12(b)(2), requires that the Secretary publish in the Federal Register a notice of each petition filed. Set forth below is a partial list of petitions received by HRSA on September 12, 1994 through December 28, 1995.

Section 2112(b)(2) also provides that the special master ''shall afford all interested persons an opportunity to submit relevant, written information'' relating to the following:

1. The existence of evidence ''that there is not a preponderance of the evidence that the illness, disability, injury, condition, or death described in the petition is due to factors unrelated to the administration of the vaccine described in the petition,'' and

2. Any allegation in a petition that the petitioner either:

(a) ''Sustained, or had significantly aggravated, any illness, disability, injury, or condition not set forth in the Table but which was caused by'' one of the vaccines referred to in the Table, or

(b) ''Sustained, or had significantly aggravated, any illness, disability, injury, or condition set forth in the Table the first symptom or manifestation of the onset or significant aggravation of which did not occur within the time period set forth in the Table but which was caused by a vaccine'' referred to in the Table.

This notice will also serve as the special master's invitation to all interested persons to submit written information relevant to the issues described above in the case of the petitions listed below. Any person choosing to do so should file an original and three (3) copies of the information with the Clerk of the U.S. Court of Federal Claims at the address listed above (under the heading **FOR FURTHER INFORMATION CONTACT**), with a copy to HRSA addressed to Director, Bureau of Health Professions, 5600 Fishers Lane, Room 8–05, Rockville, MD 20857. The Court's caption (Petitioner's Name v. Secretary of Health and Human Services) and the docket number assigned to the petition should be used as the caption for the written submission.

Chapter 35 of title 44, United States Code, related to paperwork reduction, does not apply to information required for purposes of carrying out the Program.

List of Petitions

1. Lisa Phipps and Robert E. Barclay on behalf of Robert M. Barclay, Columbus, Ohio
   Court of Federal Claims Number 94–0598 V
2. Doris and Robert Williams on behalf of Matthew Williams, Lebanon, New Hampshire
   Court of Federal Claims Number 94–0600 V
3. Kathleen Harlan on behalf of John Harlan, Springfield, Virginia
   Court of Federal Claims Number 94–0603 V
4. Teya Covin on behalf of Brianne Malone, Deceased, Evanston, Illinois
   Court of Federal Claims Number 94–0605 V
5. Karyn and George G. Childs, Jr. on behalf of Karis A. Childs, Newport News, Virginia
   Court of Federal Claims Number 94–0607 V
6. Ok Hee and Gary Peruzzi on behalf of William Peruzzi, Warrenton, Virginia
   Court of Federal Claims Number 94–0612 V
7. Debra and Ty Leary on behalf of Ashley E. Leary, Rockford, Illinois
   Court of Federal Claims Number 94–0626 V
8. Linda and Mickey Williams on behalf of Caleb Williams, Vandalia, Illinois
   Court of Federal Claims Number 94–0640 V
9. Sandra L. Braun, Traverse City, Michigan
   Court of Federal Claims Number 94–0643 V
10. Paula Jelly, New York, New York
    Court of Federal Claims Number 94–0646 V
11. David Petersen on behalf of Kirk Douglas Petersen, Deceased, Ida Grove, Iowa
    Court of Federal Claims Number 94–0650 V
12. Carolyn Holder on behalf of Brandon Holder, Bayonne, New Jersey
    Court of Federal Claims Number 94–0654 V
13. Nancy and Steven Hislop on behalf of Alexander Hislop, Deceased, Frisco, Colorado
    Court of Federal Claims Number 94–0656 V
14. William Keith Pannell, Ames, Iowa
    Court of Federal Claims Number 94–0658 V
15. Jeanne and Marc Isom on behalf of Justin James Isom, Blackfoot, Idaho
    Court of Federal Claims Number 94–0770 V
16. Elizabeth Jackson on behalf of Kwanae Tylia Dunham, Deceased, Chestertown, Maryland
    Court of Federal Claims Number 94–0780 V
17. Beverly and Paul Miller on behalf of Tifani Nicole Miller, Elkhart, Indiana
    Court of Federal Claims Number 94–0962 V
18. Celia Greengrass on behalf of Shonn Greengrass, Mineola, New York
    Court of Federal Claims Number 94–0975 V
19. Laurie Wilson on behalf of Oscar Hernandez, Jr., Rockville, Maryland
    Court of Federal Claims Number 94–0979 V
20. Christi and Jeffrey Bluem and Stuart J. Krueger on behalf of Aisha Careine Bluem, Eau Claire, Wisconsin
    Court of Federal Claims Number 94–0982 V
21. Maria Molina on behalf of Michael Anthony Molina, Vista, California
    Court of Federal Claims Number 94–0998 V
22. Beverly and Tracey Williams on behalf of Alyssa Sheridan Dale Williams, Baton Rouge, Louisiana
    Court of Federal Claims Number 94–1005 V
23. Roger Whaley on behalf of Russell Whaley, Deceased, Portland, Oregon
    Court of Federal Claims Number 94–1014 V
24. Melynda and Steven Dugas on behalf of Zackery Dugas, Sulphur, Louisiana
    Court of Federal Claims Number 94–1025 V
25. Ellen and Geoff Lepping on behalf of Melissa Nicole Lepping, Cardiff, New Jersey
    Court of Federal Claims Number 94–1028 V
26. Ann M. Jessen, Bronx, New York
    Court of Federal Claims Number 94–1029 V
27. Victoria F. Nassal on behalf of Bianca Victoria Nassal, Deceased, Sheppard Air Force Base, Texas
    Court of Federal Claims Number 94–1030 V
28. Carmen Ross on behalf of Richard Ross, Jr., Phoenix, Arizona
    Court of Federal Claims Number 94–1033 V
29. Annie and Leon Dennison on behalf of Arielle D. Dennison, Counselor, New Mexico

Court of Federal Claims Number 94–1043 V
30. Tina and Paul A. Mullins on behalf of Brandy Nicole Mullins, Deceased, Morganton, North Carolina
Court of Federal Claims Number 94–1044 V
31. Sheena and Bobby Bennett on behalf of Tyler Dane Bennett, Carnesville, Georgia
Court of Federal Claims Number 94–1046 V
32. Kimberly and John Boyer on behalf of Stephen Taylor Boyer, Richmond, Virginia
Court of Federal Claims Number 94–1063 V
33. Ellen P. and Robert D. Hunter on behalf of Caroline Assisium Hunter, Knoxville, Tennessee
Court of Federal Claims Number 94–1066 V
34. Tracy W. and Steven M. Simmons on behalf of Taylor Berlyn Simmons, Independence, Missouri
Court of Federal Claims Number 94–1073 V
35. Allen E. Minot, Jr., Providence, Rhode Island
Court of Federal Claims Number 94–1080 V
36. Laurie and Richard Rogalla on behalf of Daniel B. Rogalla, Muskegon, Michigan
Court of Federal Claims Number 94–1081 V
37. Kathy D'Lynn Domeny, Fort Worth, Texas
Court of Federal Claims Number 94–1086 V
38. Lisa Christesen on behalf of Ryan Christesen, Canton, Michigan
Court of Federal Claims Number 94–1088 V
39. Jose Bernal on behalf of Jose Armand Bernal Mancilla, Napa, California
Court of Federal Claims Number 94–1095 V
40. Margaret Tina Louise Ashe-Robinson, Fort Jackson, South Carolina
Court of Federal Claims Number 94–1096 V
41. Colleen M. Betlach, Minneapolis, Minnesota
Court of Federal Claims Number 95–0003 V
42. Heidi and Michael Gaffney on behalf of John Michael Gaffney, Roslindale, Massachusetts
Court of Federal Claims Number 95–0004 V
43. Lorenia and Rodrigo Liera on behalf of Flor De America Jazmin Liera-Ruiz, Deceased, Tucson, Arizona
Court of Federal Claims Number 95–0008 V
44. Paul Descoteaux on behalf of Caitlin Descoteaux, Deceased, Graham, Texas
Court of Federal Claims Number 95–0009 V
45. Regina Pellecchia on behalf of Christina Pellecchia, Stoneham, Massachusetts
Court of Federal Claims Number 95–0014 V
46. Leonard Mark McNutt on behalf of Mark Allen McNutt, Elizabethtown, Kentucky
Court of Federal Claims Number 95–0021 V
47. Lynn and Charles Wayne Todd on behalf of George Adrian Todd, Los Angeles, California
Court of Federal Claims Number 95–0023 V
48. Carol S. and Jeffrey Davis on behalf of Kristen Elizabeth Davis, Aiken, South Carolina
Court of Federal Claims Number 95–0024 V
49. Linda E. and Michael V. Stiny on behalf of Christina Ariana Stiny, Deceased, Bremerton, Washington
Court of Federal Claims Number 95–0033 V
50. Lana Baker and Michael Gruber on behalf of Irene Baker Gruber, Deceased, Columbus, Ohio
Court of Federal Claims Number 95–0034 V
51. Robin R. and Michael Evans on behalf of Micah Rae Evans, Ivanhoe, California
Court of Federal Claims Number 95–0040 V
52. Jo Ann Fields, Los Angeles, California
Court of Federal Claims Number 95–0048 V
53. Wenshi Gao and Xingxi Wu on behalf of Denny Kan Gao, Chapel Hill, North Carolina
Court of Federal Claims Number 95–0051 V
54. Tanya Williams on behalf of Taracee Williams, Mobile, Alabama
Court of Federal Claims Number 95–0054 V
55. Linda and Doug Spence on behalf of Sarah Kaye Spence, Houston, Texas
Court of Federal Claims Number 95–0057 V
56. William J. Steves, Doyle, California
Court of Federal Claims Number 95–0063 V
57. Susan L. and Curtis C. Rosson on behalf of Derrek Michael Rosson, Kissimmee, Florida
Court of Federal Claims Number 95–0065 V
58. Sarah Bridges Parlet on behalf of Porter Bridges-Parlet, Minneapolis, Minnesota
Court of Federal Claims Number 95–0067 V
59. Joyce Baranski, Cahoes, New York
Court of Federal Claims Number 95–0080 V
60. Consuelo Irizarry and Jesus Velez on behalf of Jesus Velez Irizarry, San German, Puerto Rico
Court of Federal Claims Number 95–0095 V
61. Lisa E. and James H. Walsh on behalf of Kelsey J. Walsh, Tappan, New York
Court of Federal Claims Number 95–0104 V
62. Tangee R. Davis and Hillary McGinnis, Jr. on behalf of Lashondra McGinnis, New Orleans, Louisiana
Court of Federal Claims Number 95–0107 V
63. Charles F. Grady, Jr. on behalf of Charles Grady, III, Deceased, Durham, North Carolina
Court of Federal Claims Number 95–0109 V
64. Norma Malaga on behalf of Kristopher Malaga, Deceased, Garland, Texas
Court of Federal Claims Number 95–0110 V
65. Donny M. Peterson, Ottawa, Kansas
Court of Federal Claims Number 95–0124 V
66. Shawander Scott on behalf of Christopher R. Watson, Deceased, St. Louis, Missouri
Court of Federal Claims Number 95–0129 V
67. Carmen Garcia and Ruberquin Marinez on behalf of Julio Cesar Marinez, Miami, Florida
Court of Federal Claims Number 95–0132 V
68. Lynn M. and Jeffrey J. Priest on behalf of Camille E. Priest, Toledo, Ohio
Court of Federal Claims Number 95–0134 V
69. Lee Anne Horton on behalf of Jacob Horton, Dearborn Heights, Michigan
Court of Federal Claims Number 95–0135 V
70. Carol Johnson on behalf of Chala Rae Heasty-Yow, Deceased, Lawton, Oklahoma
Court of Federal Claims Number 95–0140 V
71. Jana and Jeffrey Exline on behalf of Austin Exline, Winston-Salem, North Carolina
Court of Federal Claims Number 95–0141 V
72. Robyn M. and James M. Miller on behalf of Nathan J. Miller, Deceased, North Syracuse, New York
Court of Federal Claims Number 95–0145 V

73. Maureen and John Walsh on behalf of Shana Walsh, Dumont, New Jersey
Court of Federal Claims Number 95–0149 V
74. Nicole Constandis, Westfield, New Jersey
Court of Federal Claims Number 95–0151 V
75. Corrie and Blaine Watkins on behalf of Tyler Watkins, American Fork, Utah
Court of Federal Claims Number 95–0154 V
76. Susan and Simon Ross-Hill on behalf of Brandon Ross-Hill, Las Vegas, Nevada
Court of Federal Claims Number 95–0155 V
77. Auburn and Lee Lott on behalf of Nicholas Lott, Provo, Utah
Court of Federal Claims Number 95–0156 V
78. Anita June and Jeffrey Lynn Johnson on behalf of Seth Willis Johnson, Athens, Tennessee
Court of Federal Claims Number 95–0157 V
79. Karen and Thomas Kain on behalf of Lorrin Kain, Huntington Beach, California
Court of Federal Claims Number 95–0158 V
80. Denise Valdez on behalf of Evan Valdez, Corona, California
Court of Federal Claims Number 95–0159 V
81. Michelle and Greg Lansbury on behalf of Tanner Lansbury, Corona, California
Court of Federal Claims Number 95–0160 V
82. Nancy Sanderhoff on behalf of Julianne N. Sanderhoff, Fairfax, Virginia
Court of Federal Claims Number 95–0161 V
83. Tracy Lynn and Patrick Donald Brown on behalf of Callie Breann Brown, Cartersville, Georgia
Court of Federal Claims Number 95–0162 V
84. Anita Cardine on behalf of Charisma Cardine, Chicago, Illinois
Court of Federal Claims Number 95–0163 V
85. Leslie Camozzi, San Francisco, California
Court of Federal Claims Number 95–0164 V
86. Mary Woodward on behalf of Joshua Woodward, Ann Arbor, Michigan
Court of Federal Claims Number 95–0165 V
87. Lennie M. Busswitz on behalf of Connie Ann Busswitz, Worthington, Minnesota
Court of Federal Claims Number 95–0170 V
88. Dawn and Marc Buchak on behalf of Thomas G. Buchak, Hackensack, New Jersey
Court of Federal Claims Number 95–0172 V
89. Carol Rees Grady on behalf of Justin J. Grady, Portland, Oregon
Court of Federal Claims Number 95–0173 V
90. Kathleen and Scott Niemann on behalf of Danielle Niemann, Coon Rapids, Minnesota
Court of Federal Claims Number 53–0174 V
91. Cynthia Owl on behalf of Zachery M. Owl, West Saint Paul, Minnesota
Court of Federal Claims Number 95–0175 V
92. Joann and Anthony DiLolle on behalf of Nicole DiLolle, Haddon Heights, New Jersey
Court of Federal Claims Number 95–0176 V
93. Sandra M. and Harold Parker on behalf of Brooke Renee Parker, Lafayette, Louisiana
Court of Federal Claims Number 95–0177 V
94. Terry Ross on behalf of Randolph E. Ross, II, Toledo, Ohio
Court of Federal Claims Number 95–0178 V
95. Sandy Lee Ballard and Donald L. Scott on behalf of Cheyenne Marie Ballard, Lantana, Florida
Court of Federal Claims Number 95–0179 V
96. Marilyn Leon on behalf of Jillian Leon, Union City, New Jersey
Court of Federal Claims Number 95–0181 V
97. Terri and Anthony Ciccodicola on behalf of Samantha Ciccodicola, Morristown, New Jersey
Court of Federal Claims Number 95–0183 V
98. Deane and Avery Milenkovic on behalf of Craig R. Avery-Milenkovic, Countryside, Illinois
Court of Federal Claims Number 95–0184 V
99. Patricia Dipre on behalf of Jeremy Dipre, Willoughby, Ohio
Court of Federal Claims Number 95–0185 V
100. Mary Robertson on behalf of Lorenzo Latimore, Phoenix, Arizona
Court of Federal Claims Number 95–0186 V
101. Amy Robertson on behalf of Lauren Danielle Robertson, Sincastle, Virginia
Court of Federal Claims Number 95–0187 V
102. Janet Weinglass and Robert Nirenberg on behalf of Joseph Nirenberg, Croton On Hudson, New York
Court of Federal Claims Number 95–0188 V
103. Michelle K. and Todd R. Ulicny on behalf of Carrington Todd Ulicny, Anaheim, California
Court of Federal Claims Number 95–0189 V
104. Lynda Ann Pigula on behalf of Adrianne Barber Pigula, The Woodlands, Texas
Court of Federal Claims Number 95–0190 V
105. Laura and Frank Gallagher on behalf of Courtney Leigh Gallagher, Rockaway, New Jersey
Court of Federal Claims Number 95–0191 V
106. Laurie and Robert A. Nicholas on behalf of Quentin Robert Nicholas, Riverton, Wyoming
Court of Federal Claims Number 95–0192 V
107. Russell Rapoza and Patricia Oshiro on behalf of Christopher Akira Tien Rapoza, Hilo, Hawaii
Court of Federal Claims Number 95–0193 V
108. Holly Putinsky on behalf of Samantha Yvonne Yoakum, Charlotte, North Carolina
Court of Federal Claims Number 95–0194 V
109. Kelly McMannes Wise on behalf of Roy Thomas Getz, Garner, North Carolina
Court of Federal Claims Number 95–0195 V
110. Maria Nicole and Mark Miller on behalf of Leah Miller, Brownsville, Texas
Court of Federal Claims Number 95–0196 V
111. Melanie Johnson on behalf of Devin Johnson, Maplewood, Minnesota
Court of Federal Claims Number 95–0197 V
112. Karen and Brian Pado on behalf of Chasen J. Pado, San Ramon, California
Court of Federal Claims Number 95–0198 V
113. Dena and Kenneth Royal on behalf of Andrew, Royal Vancouver, British Columbia, Canada
Court of Federal Claims Number 95–0199 V
114. Colleen Bergmann on behalf of Spencer Bergmann, Deceased, Oak Creek, Wisconsin
Court of Federal Claims Number 95–0200 V
115. Deborah Lynn Rommelman on behalf on John Winston Bell, Jr., Deceased, Glassboro, New Jersey
Court of Federal Claims Number 95–0201 V
116. Catherine Towe on behalf of Jacob Towe, Decatur, Alabama
Court of Federal Claims Number 95–0202 V

117. Martha DiLullo on behalf of Cameron DiLullo, Brandon, Florida
Court of Federal Claims Number 95–0203 V
118. Joellen Bass on behalf of James C. Gross, Marion, Indiana
Court of Federal Claims Number 95–0204 V
119. Janet Moran on behalf of Shawnell Carr, New York, New York
Court of Federal Claims Number 95–0205 V
120. Michelle Waight on behalf of Shawn Eric Waight, Jr., San Diego, California
Court of Federal Claims Number 95–0206 V
121. Alexandra Roud on behalf of Jessica Roud, Wuerzburg, Germany
Court of Federal Claims Number 95–0207 V
122. Sheryl Cozad on behalf of Jordan Cozad, Boston, Massachusetts
Court of Federal Claims Number 95–0208 V
123. Maureen Forceskie on behalf of Cael Forceskie, Anchorage, Alaska
Court of Federal Claims Number 95–0209 V
124. Marcella and Daniel Schwarz on behalf of Hannah Schwarz, Billings, Montana
Court of Federal Claims Number 95–0210 V
125. Trish Pendelton on behalf of Brandon Pendelton, Lexington, Kentucky
Court of Federal Claims Number 95–0211 V
126. Christine Constanzi on behalf of Vincent Constanzi, Boston, Massachusetts
Court of Federal Claims Number 95–0212 V
127. Mary Ramsey on behalf of Jonathan Ramsey, Washington, Pennsylvania
Court of Federal Claims Number 95–0213 V
128. Amy Strickland on behalf of Hunter Strickland, Deceased, Columbia, South Carolina
Court of Federal Claims Number 95–0214 V
129. Lori and John Trojanowicz on behalf of Melissa Trojanowicz, Carbondale, Pennsylvania
Court of Federal Claims Number 95–0215 V
130. Yolanda Denise Garcia on behalf of Ruben Martinez, Austin, Texas
Court of Federal Claims Number 95–0216 V
131. Sharon Boere and Mark James Pederson on behalf of Kirk Pederson, Galveston, Texas
Court of Federal Claims Number 95–0217 V
132. Margaret A. Cherne on behalf of Matthew Cherne, Duluth, Minnesota
Court of Federal Claims Number 95–0218 V
133. Elaine Bailey on behalf of Azalea Bailey, Deceased, Indianola, Mississippi
Court of Federal Claims Number 95–0230 V
134. Sheryl Chariff Pertnoy on behalf of Alexander Chariff, Hollywood, Florida
Court of Federal Claims Number 95–0248 V
135. Rowena C. Knepper on behalf of Beverly Knepper, Portland, Oregon
Court of Federal Claims Number 92–0251 V
136. Brooke Barnes-Ray on behalf of Ethan Taylor Barnes, Johnson City, Tennessee
Court of Federal Claims Number 95–0262 V
137. Robalee and Russell Bruesewitz on behalf of Hannah Bruesewitz, Pittsburgh, Pennsylvania
Court of Federal Claims Number 95–0266 V
138. Tonya and Armando Esquivel on behalf of Armando S. Esquivel, Yakima, Washington
Court of Federal Claims Number 95–0271 V
139. Patricia Shyface and June Shyface on behalf of Cheyenne Michael Shyface, Deceased, Poplar, Montana
Court of Federal Claims Number 95–0272 V
140. Cheryl Chandler, Newport, Rhode Island
Court of Federal Claims Number 95–0273 V
141. Constance E. Frankenbery, Annapolis, Maryland
Court of Federal Claims Number 95–0277 V
142. James Lombardo on behalf of Thomas Zach Lombardo, Seattle, Washington
Court of Federal Claims Number 95–0282 V
143. Doba and Mendel Lewin on behalf of Moshe Lewin, Brooklyn, New York
Court of Federal Claims Number 95–0289 V
144. Amanda K. Riggs on behalf of Gabriel Lucas, Deceased, Virginia Beach, Virginia
Court of Federal Claims Number 95–0295 V
145. Geraldine Haggerty on behalf of Mary Elizabeth Haggerty, Brooklyn, New York
Court of Federal Claims Number 95–0306 V
146. Diane Mercier on behalf of Victoria Renee Mercier, Fairview Park, Ohio
Court of Federal Claims Number 95–0312 V
147. Katherine Renea Bosch on behalf of Justin Bosch, Deceased, Vancouver, Washington
Court of Federal Claims Number 95–0313 V
148. Lisa and Mark Moorman on behalf of Conor Moorman, San Luis Obispo, California
Court of Federal Claims Number 95–0323 V
149. Sandra and John Winters on behalf of Christopher Winters, Flora, Indiana
Court of Federal Claims Number 95–0335 V
150. Michael L. Cook, Campbellsville, Kentucky
Court of Federal Claims Number 95–0336 V
151. Patricia Gail Isbell on behalf of Zachary Ryan Isbell, Deceased, Leeds, Alabama
Court of Federal Claims Number 95–0340 V
152. Donna and Kevin Carroll on behalf of Ryan Michael Carroll, Ypsilanti, Michigan
Court of Federal Claims Number 95–0342 V
153. Judy and Thomas Waleryszak on behalf of Joshua Thomas Waleryszak, Deceased, Seattle, Washington
Court of Federal Claims Number 95–0356 V
154. Letebrhan Legesse on behalf of Essey Dawed, Boston, Massachusetts
Court of Federal Claims Number 95–0357 V
155. Barbara J. Brandt, Boulder, Colorado
Court of Federal Claims Number 95–0360 V
156. Christine and Roy Wendte on behalf of Eric Wendte, Effingham, Illinois
Court of Federal Claims Number 95–0379 V
157. Caesar Desiato, Bristol, Pennsylvania
Court of Federal Claims Number 95–0383 V
158. Carolyn Gibson on behalf of Brandy Mae Mulliniks, Clarkston, Michigan
Court of Federal Claims Number 95–0388 V
159. Jay A. Morrison, Bellingham, Washington
Court of Federal Claims Number 95–0392 V
160. Geno Columbo, Marquette, Michigan
Court of Federal Claims Number 95–0394 V
161. Elizabeth K. And Greg S. Holihan on behalf of Patrick G. Holihan, Long Beach, California
Court of Federal Claims Number 95–

0399 V
162. Michael R. Tesch, Wausau, Wisconsin
Court of Federal Claims Number 95–0400 V
163. Mary Yvette Payne-Gipson on behalf of E'Vonne Tiffany Gipson, Ruston, Louisiana
Court of Federal Claims Number 95–0440 V
164. Shirley Parish, Rancho Mirage, California
Court of Federal Claims Number 95–0448 V
165. Michele Y. Terran on behalf of Julie F. Terran, Phoenix, Arizona
Court of Federal Claims Number 95–0451 V
166. Karen and Daniel Spohn on behalf of Veronica N. Spohn, Butler, Pennsylvania
Court of Federal Claims Number 95–0460 V
167. Kristin and Christian Bonham on behalf of Casey Graham Bonham, Lake Mary, Florida
Court of Federal Claims Number 95–0469 V
168. Michelle and Malcolm Clements on behalf of Andrew M. Clements, Milwaukee, Wisconsin
Court of Federal Claims Number 95–0484 V
169. Tara and David Dyer on behalf of David Andrew Dyer, Knoxville, Tennessee
Court of Federal Claims Number 95–0491 V
170. Nancy Morris on behalf of Robin Morris, North Miami Beach, Florida
Court of Federal Claims Number 95–0494 V
171. Janice Kilbey and Frank S.K. Silbermann on behalf of Eliana Ivy Silbermann, New Orleans, Louisiana
Court of Federal Claims Number 95–0501 V
172. Sonya Roland on behalf of Blake Boseman, Deceased, Richmond, Virginia
Court of Federal Claims Number 95–0520 V
173. Debra J. and Jan C. Chopel on behalf of Stephen Christopher Chopel, Deceased, Raleigh, North Carolina
Court of Federal Claims Number 95–0547 V
174. Denise M. Griffin on behalf of Tasha Latonya Griffin, Prichard, Alabama
Court of Federal Claims Number 95–0551 V
175. Cathy and Jackie Riggs, Kevin Marshall, and Brian Riggs on behalf of Jason Ray Marshall, Lancaster, Texas
Court of Federal Claims Number 95–0552 V
176. Caterina Giapocelli, Amityville, New York
Court of Federal Claims Number 95–0555 V
177. Sheila Delerme on behalf of Christina Davis, Dover, Delaware
Court of Federal Claims Number 95–0558 V
178. Connie and Jim McGinley on behalf of Brittany McGinley, Atlanta, Georgia
Court of Federal Claims Number 95–0562 V
179. Alyson and Steven Lazarus on behalf of Aaron Lazarus, Deceased, Teaneck, New Jersey
Court of Federal Claims Number 95–0571 V
180. Leroy Tyrone Whiting, Jr. and Judith A. Richards on behalf of Kendra Patrice Whiting, Deceased, Baltimore, Maryland
Court of Federal Claims Number 95–0577 V
181. Jackie and Gary Leonard on behalf of Makenzie Leonard, Somerset, Pennsylvania
Court of Federal Claims Number 95–0612 V
182. Jackie and Gary Leonard on behalf of Kylee Leonard, Somerset, Pennsylvania
Court of Federal Claims Number 95–0613 V
183. Karen and Christopher Yelick on behalf of Chelsea Yelick, Dearborn, Michigan
Court of Federal Claims Number 95–0621 V
184. Japel M. Pearson, Washington, D.C.
Court of Federal Claims Number 95–0630 V
185. Bonnie and Arthur Brown on behalf of Ashlee R. Brown and Harley D. Brown, Deceased, Minot Air Force Base, North Dakota
Court of Federal Claims Number 95–0645 V
186. Glorian Brown on behalf of Galetta Lielanna Brown, Deceased, Welch, West Virginia
Court of Federal Claims Number 95–0647 V
187. Gayle Elliott on behalf of Jordie Sarah Pervis, Deceased, Carnegie, Oklahoma
Court of Federal Claims Number 95–0651 V
188. Juana and Jesus Castillo on behalf of Michael Castillo, Donna, Texas
Court of Federal Claims Number 95–0652 V
189. Nancy E. and Jonathan E. Martin on behalf of Elizabeth Martin, Deceased, Charleston, South Carolina
Court of Federal Claims Number 95–0653 V
190. Rebecca L. and Miles A. McMurry on behalf of Lauren O. McMurry, Raleigh, North Carolina
Court of Federal Claims Number 95–0682 V
191. Sheila Gard-Valdez, Sacramento, California
Court of Federal Claims Number 95–0686 V
192. Dilema Moreno, Anchorage, Alaska
Court of Federal Claims Number 95–0706 V
193. Tina Gonzales on behalf of Danielle Gonzales, Glendale, California
Court of Federal Claims Number 95–0707 V
194. Anne McCarthy, Santa Cruz, California
Court of Federal Claims Number 95–0709 V
195. Christine and Kevin Haynes on behalf of Kalynn Haynes, Chino, California
Court of Federal Claims Number 95–0716 V
196. Victoria M. Lewis on behalf of Caroline I. Lewis, Gainesville, Florida
Court of Federal Claims Number 95–0728 V
197. Jennifer and Steven King on behalf of John King, Fairfield, Connecticut
Court of Federal Claims Number 95–0759 V
198. Yvette Jules on behalf of Stecy Camberlan, Deceased, New York City, New York
Court of Federal Claims Number 95–0774 V
199. Jared A. Watson, Pelham, Alabama
Court of Federal Claims Number 95–0776 V
200. Nina and John Oetting on behalf of Katherine Elizabeth Oetting, Lexington, Missouri
Court of Federal Claims Number 95–0785 V
201. Alicia Leonard on behalf of Breana T. Leonard, Shawnee, Oklahoma
Court of Federal Claims Number 95–0812 V
202. Diana Sherwood on behalf of Daniel Sullivan, Deceased, Newburgh, New York
Court of Federal Claims Number 95–0832 V
203. Laurajean Councill and Joseph Oster Brice on behalf of Joseph Tillgham Brice, Pasadena, Maryland
Court of Federal Claims Number 95–0835 V
204. Patricia and Charles Lynn on behalf of Alesia Lynn, Vicksburg, Mississippi
Court of Federal Claims Number 95–0855 V

Dated: September 30, 1996.

Ciro V. Sumaya,

Administrator.

[FR Doc. 96–25430 Filed 10–3–96; 8:45 am]

BILLING CODE 4160–15–P

National Institutes of Health

National Institute on Alcohol Abuse and Alcoholism; Notice of Closed Meeting

Pursuant to section 10(d) of the Federal Advisory Committee Act, as amended (5 U.S.C. Appendix 2), notice is hereby given of the following meeting of the National Institute on Alcohol Abuse and Alcoholism Initial Review Group:

Purpose/Agenda: To review and evaluate grant applications.

Name of Committee: Clinical and Treatment Subcommittee.

Dates of Meeting: October 24–25, 1996.

Time:

October 24, 8:30 a.m. to recess

October 25, 8:30 a.m. to adjournment

Place of Meeting: Holiday Inn of Bethesda, 8120 Wisconsin Ave., Bethesda, MD 20814.

Contact Person: Elsie D. Taylor, 6000 Executive Blvd, Suite 409, Bethesda, MD 20892–7003, 301–443–9787.

The meeting will be closed in accordance with the provisions set forth in secs. 552b(c)(4) and 552b(c)(6), Title 5, U.S.C. Applications and/or proposals and the discussions could reveal confidential trade secrets or commercial property such as patentable material, and personal information concerning individuals associated with the applications and/or proposals, the disclosure of which would constitute a clearly unwarranted invasion of personal privacy.

(Catalog of Federal Domestic Assistance Program No. 93.271, Alcohol Research Career Development Awards for Scientists and Clinicians; 93.272, Alcohol National Research Service Awards for Research Training; 93.273, Alcohol Research Programs; National Institutes of Health)

Dated: September 26, 1996.

Paula N. Hayes,

Acting Committee Management Officer, NIH.

[FR Doc. 96–25431 Filed 10–3–96; 8:45 am]

BILLING CODE 4140–01–M

National Institute on Drug Abuse; Notice of Closed Meetings

Pursuant to Section 10(d) of the Federal Advisory Committee Act, as amended (5 U.S.C. Appendix 2), notice is hereby given of the following National Institute on Drug Abuse (NIDA) Special Emphasis Panel meetings:

Purpose/Agenda: To evaluate and review grant applications.

Name of Committee: NIDA Special Emphasis Panel.

Date: October 15, 1996.

Time: 8:30 a.m.

Place: Bethesda Marriott, 5151 Pooks Hill Road, Bethesda, MD 20814.

Contact Person: Gamil Debbas, Ph.D., Scientific Review Administrator, Office of Extramural Program Review, National Institute on Drug Abuse, 5600 Fishers Lane, Room 10–22, Telephone (301) 443–2620.

Name of Committee: NIDA Special Emphasis Panel.

Date: October 17, 1996.

Time: 8:30 a.m.

Place: Ramada Inn, 1775 Rockville Pike, Rockville, MD 20852.

Contact Person: Mary C. Custer, Ph.D., Scientific Review Administrator, Office of Extramural Program Review, National Institute on Drug Abuse, 5600 Fishers Lane, Room 10–22, Telephone (301) 443–2620.

This notice is being published less than 15 days prior to the meetings due to the urgent need to meet timing limitations imposed by the review and funding cycle.

The meetings will be closed in accordance with provisions set forth in secs. 552b(c)(4) and 552b(c)(6), Title 5, U.S.C. The applications and the discussions could reveal confidential trade secrets or commercial property such as patentable material and personal information concerning individuals associated with the applications, the disclosure of which would constitute a clearly unwarranted invasion of personal privacy.

(Catalog of Federal Domestic Assistance Program Numbers: 93.277, Drug Abuse Scientist Development, Research Scientist Development, and Research Scientist Awards; 93.278, Drug Abuse National Research Service Awards for Research Training; 93.279, Drug Abuse Research Programs, National Institutes of Health)

Dated: September 26, 1996.

Paula N. Hayes,

Acting Committee Management Officer, NIH.

[FR Doc. 96–25432 Filed 10–3–96; 8:45 am]

BILLING CODE 4140–01–M

National Institute on Aging; Notice of Closed Meetings

Pursuant to Section 10(d) of the Federal Advisory Committee Act, as amended (5 U.S.C. Appendix 2), notice is hereby given of the following meetings:

Name of Panel: National Institute on Aging Special Emphasis Panel (Teleconference).

Date of Meeting: October 17, 1996.

Time of Meeting: 10:30 a.m. to adjournment.

Place of Meeting: National Institute on Aging, Gateway Building, Room 2C212, 7201 Wisconsin Avenue, Bethesda, MD 20892.

Purpose/Agenda: To review a grant application.

Contact Person: Louise L. Hsu, Ph.D., Scientific Review Administrator, Gateway Building, Room 2C212, National Institutes of Health, Bethesda, Maryland 20892–9205, (301) 496–9666.

This notice is being published less than 15 days prior to the above meeting due to the urgent need to meet timing limitations imposed by the review and funding cycle.

Name of Panel: National Institute on Aging Special Emphasis Panel (Teleconference).

Date of Meeting: October 30, 1996.

Time of Meeting: 10:00 a.m. to adjournment.

Place of Meeting: National Institute on Aging, Gateway Building, Room 2C212, 7201 Wisconsin Avenue, Bethesda, MD 20892.

Purpose/Agenda: To review a grant application.

Contact Person: Israel Ramirez, Ph.D., Gateway Building, Room 2C212, National Institutes of Health, Bethesda, Maryland 20892–9205, (301) 496–9666.

Name of Panel: National Institute on Aging Special Emphasis Panel.

Dates of Meeting: November 4–5, 1996.

Times of Meeting:

November 4—7:00 p.m. to recess

November 5—8:00 a.m. to adjournment

Place of Meeting: Doubletree Hotel, 1750 Rockville Pike, Rockville, Maryland 20852.

Purpose/Agenda: To review a grant application.

Contact Person: Paul Lenz, Ph.D., Scientific Review Administrator, Gateway Building, Room 2C212, National Institutes of Health, Bethesda, Maryland 20892–9205, (301) 496–9666.

These meetings will be closed in accordance with the provisions set forth in secs. 552b(c)(4) and 552b(c)(6), Title 5, U.S.C. Applications and/or proposals and the discussions could reveal confidential trade secrets or commercial property such as patentable material and personal information concerning individuals associated with the applications and/or proposals, the disclosure of which would constitute a clearly unwarranted invasion of personal privacy.

(Catalog of Federal Domestic Assistance Program No. 93.866, Aging Research, National Institutes of Health)

Dated: September 26, 1996.

Paula N. Hayes,

Acting Committee Management Officer, NIH.

[FR Doc. 96–25434 Filed 10–3–96; 8:45 am]

BILLING CODE 4140–01–M

National Institute of General Medical Sciences; Notice of Closed Meetings

Pursuant to Section 10(d) of the Federal Advisory Committee Act, as amended (5 U.S.C. Appendix 2), notice is hereby given of the following meetings:

Committee Name: Biomedical Research and Research Training Committee—BRT–C.

Date: November 7, 1996.

Time: 8:30 a.m.—adjournment.

Place: Holiday Inn—Chevy Chase, 5520 Wisconsin Avenue, Chevy Chase, Maryland 20815.

Contact Person: Arthur L. Zachary, Ph.D., Scientific Review Administrator, NIGMS, 45 Center Drive, Room 1AS–13H, Bethesda, MD 20892–6200, (301) 594–2886.

Purpose: To review institutional predoctoralresearch training grant applications.

Committee Name: Biomedical Research and Research Training Review Subcommittee B(1).

Date: November 7, 1996.

Time: 8:30 a.m.—adjournment.

Place: Holiday Inn—Chevy Chase, 5520 Wisconsin Avenue, Chevy Chase, Maryland 20815.

Contact Person: Irene B. Glowinski, Ph.D., Scientific Review Administrator, NIGMS, 45 Center Drive, Room 1AS–13J, Bethesda, MD 20892–6200, (301) 594–2772.

Purpose: To review institutional predoctoral research training grant applications.

Committee Name: Biomedical Research and Research Training Review Subcommittee B(2).

Date: November 8, 1996.

Time: 8:30 a.m.—adjournment.

Place: Holiday Inn—Chevy Chase, 5520 Wisconsin Avenue, Chevy Chase, Maryland 20815.

Contact Person: Bruce K. Wetzel, Ph.D., Scientific Review Administrator, NIGMS, 45 Center Drive, Room 1AS–19K, Bethesda, MD 20892–6200, (301) 594–3907.

Purpose: To review institutional predoctoral training grant applications.

Committee Name: BRT–A1 Review Committee.

Date: November 7, 1996.

Time: 8:00 a.m.—adjournment.

Place: Holiday Inn—Chevy Chase, 5520 Wisconsin Avenue, Chevy Chase, Maryland 20815.

Contact Person: Carol H. Latker, Ph.D., Scientific Review Administrator, NIGMS, 45 Center Drive, Room 1AS–13K, Bethesda, MD 20892–6200, (301) 594–6904.

Purpose: To review institutional predoctoral research training grant applications.

Committee Name: BRT–A2 Review Committee.

Date: November 8, 1996.

Time: 8:00 a.m.—adjournment.

Place: Holiday Inn—Chevy Chase, 5520 Wisconsin Avenue, Chevy Chase, Maryland 20815.

Contact Person: Carol H. Latker, Ph.D., Scientific Review Administrator, NIGMS, 45 Center Drive, Room 1AS–13K, Bethesda, MD 20892–6200, (301) 594–6904.

Purpose: To review institutional predoctoral research training grant applications.

These meetings will be closed in accordance with the provisions set forth in secs. 552b(c)(4) and 552b(c)(6), Title 5, U.S.C. The discussions of these applications could reveal confidential trade secrets or commercial property such as patentable material and personal information concerning individuals associated with the applications, the disclosure of which would constitute a clearly unwarranted invasion of personal privacy.

(Catalog of Federal Domestic Assistance Program Nos. 93.821, Biophysics and Physiological Sciences; 93.859, Pharmacological Sciences; 93.862, Genetics Research; 93.863, Cellular and Molecular Basis of Disease Research; 93.880, Minority Access Research Careers [MARC]; and 93.375, Minority Biomedical Research Support [MBRS])

Dated: September 27, 1996.

Paula N. Hayes,

Acting Committee Management Officer, NIH.

[FR Doc. 96–25436 Filed 10–3–96; 8:45 am]

BILLING CODE 4140–01–M

National Institute of Neurological Disorders and Stroke, Division of Extramural Activities; Notice of Closed Meeting

Pursuant to Section 10(d) of the Federal Advisory Committee Act, as amended (5 U.S.C. Appendix 2), notice is hereby given of the following meeting:

Name of Committee: National Institute of Neurological Disorders and Stroke Special Emphasis Panel.

Date: November 18, 1996.

Time: 5:00 p.m.

Place: Embassy Suites, 1250 Twenty-Second Street, N.W., Washington, D.C. 20037.

Contact Person: Dr. Katherine Woodbury-Harris, Scientific Review Administrator, National Institutes of Health, 7550 Wisconsin Avenue, Room 9C10, Bethesda, MD 20892, (301) 496–9223.

Purpose/Agenda: To review and evaluate a grant application.

The meeting will be closed in accordance with the provisions set forth in sections 552b(c)(4) and 552b(c)(6), Title 5, U.S.C. Applications and/or proposals and the discussions could reveal confidential trade secrets or commercial property such as patentable material and personal information concerning individuals associated with the applications and/or proposals, the disclosure of which would constitute a clearly unwarranted invasion of personal privacy.

(Catalog of Federal Domestic Assistance Program No. 93.853, Clinical Research Related to Neurological Disorders; No. 93.854, Biological Basis Research in the Neurosciences)

Dated: September 27, 1996.

Paula N. Hayes,

Acting Committee Management Officer, NIH.

[FR Doc. 96–25437 Filed 10–3–96; 8:45 am]

BILLING CODE 4140–01–M

National Institute on Alcohol Abuse and Alcoholism; Notice of Closed Meeting

Pursuant to Section 10(d) of the Federal Advisory Committee Act, as amended (5 U.S.C. Appendix 2), notice is hereby given of the following meeting:

Purpose/Agenda: To review and evaluate a grant application.

Name of Committee: National Institute on Alcohol Abuse and Alcoholism Special Emphasis Panel.

Date of Meeting: October 7, 1996 (Telephone conference).

Time: 12:00 p.m.

Place of Meeting: Willco Building, 6000 Executive Blvd., Bethesda, MD 20892–7003.

Contact Person: Thomas Gentry, 6000 Executive Blvd., Suite 405, Bethesda, MD 20892–7003, 301–443–7003.

This notice is being published less than 15 days prior to the meeting due to the urgent need to meet timing limitations imposed by the review and funding cycle.

The meeting will be closed in accordance with the provisions set forth in sections 552b(c)(4) and 552b(c)(6), Title 5 U.S.C. Applications and/or proposals and the discussions could reveal confidential trade secrets or commercial property such as patentable material, and personal information concerning individuals associated with the applications and/or proposals, the disclosure of which would constitute a clearly unwarranted invasion of personal privacy.

(Catalog of Federal Domestic Assistance Program No. 93.271, Alcohol Research Career Development Awards for Scientists and Clinicians; 93.272, Alcohol National Research Service Awards for Research Training; 93.273, Alcohol Research Programs; 93.891, Alcohol Research Center Grants; National Institutes of Health)

Dated: September 30, 1996.

Paula N. Hayes,

Acting Committee Management Officer, NIH.

[FR Doc. 96–25517 Filed 10–3–96; 8:45 am]

BILLING CODE 4140–01–M

Division of Research Grants; Notice of Closed Meeting

Pursuant to Section 10(d) of the Federal Advisory Committee Act, as amended (5 U.S.C. Appendix 2), notice is hereby given of the following Division of Research Grants Special Emphasis Panel (SEP) meeting:

Purpose/Agenda: To review individual grant applications.

Name of SEP: Clinical Sciences.

Date: October 9–11, 1996.

Time: 8:30 a.m.

Place: DoubleTree Hotel, Rockville, MD.

Contact Person: Dr. Christine Melchior, Scientific Review Administrator, 6701 Rockledge Drive, Room 4118, Bethesda, Maryland 20892, (301) 435–1713.

This notice is being published less than 15 days prior to the above meeting due to the urgent need to meet timing limitations imposed by the grant review and funding cycle.

The meeting will be closed in accordance with the provisions set forth in secs. 552b(c)(4) and 552b(c)(6), Title 5, U.S.C. Applications and/or proposals and the discussions could reveal confidential trade secrets or commercial property such as patentable material and personal information concerning individuals associated with the applications and/or proposals, the disclosure of which would constitute a clearly unwarranted invasion of personal privacy.

(Catalog of Federal Domestic Assistance Program Nos. 93.306, 93.333, 93.337, 93.393–93.396, 93.837–93.844, 93.846–93.878, 93.892, 93.893, National Institutes of Health, HHS)

Dated: September 26, 1996.

Paula N. Hayes,

Acting Committee Management Officer, NIH.

[FR Doc. 96–25433 Filed 10–3–96; 8:45 am]

BILLING CODE 4140–01–M

Division of Research Grants; Notice of Closed Meetings

Pursuant to Section 10(d) of the Federal Advisory Committee Act, as amended (5 U.S.C. Appendix 2), notice is hereby given of the following Division of Research Grants Special Emphasis Panel (SEP) meetings:

Purpose/Agenda: To review individual grant applications.
Name of SEP: Biological and Physiological Sciences.
Date: October 24, 1996.
Time: 8:00 a.m.
Place: Washington Vista Hilton International, Washington, DC.
Contact Person: Dr. Bob Weller, Scientific Review Administrator, 6701 Rockledge Drive, Room 5204, Bethesda, Maryland 20892, (301) 435–1259.

Name of SEP: Clinical Sciences.
Date: October 28–30, 1996.
Time: 8:30 a.m.
Place: Double Tree Hotel, Rockville, MD.
Contact Person: Dr. Christine Melchior, Scientific Review Administrator, 6701 Rockledge Drive, Room 4118, Bethesda, Maryland 20892, (301) 435–1713.

Name of SEP: Biological and Physiological Sciences.
Date: October 30, 1996.
Time: 1:00 p.m.
Place: NIH, Rockledge 2, Room 4204, Telephone Conference.
Contact Person: Dr. Calbert Laing, Scientific Review Administrator, 6701 Rockledge Drive, Room 4204, Bethesda, Maryland 20892, (301) 435–1221.

Name of SEP: Clinical Sciences
Date: October 31, 1996
Time: 2:00 p.m.
Place: NIH, Rockledge 2, Room 4138, Telephone Conference
Contact Person: Dr. Anthony Chung, Scientific Review Administrator, 6701 Rockledge Drive, Room 4138, Bethesda, Maryland 20892, (301) 435–1213.

Name of SEP: Clinical Sciences.
Date: November 5, 1996.
Time: 12:00 p.m.
Place: Olde Towne Holiday Inn, Alexandria, VA.
Contact Person: Dr. Dan McDonald, Scientific Review Administrator, 6701 Rockledge Drive, Room 4214, Bethesda, Maryland 20892, (301) 435–1215.

Name of SEP: Clinical Sciences.
Date: November 5, 1996.
Time: 1:30 p.m.
Place: NIH, Rockledge 2, Room 4216, Telephone Conference.
Contact Person: Dr. Harold Davidson, Scientific Review Administrator, 6701 Rockledge Drive, Room 4216, Bethesda, Maryland 20892, (301) 435–1776.

Name of SEP: Clinical Sciences.
Date: November 6, 1996.
Time: 11:00 a.m.
Place: NIH, Rockledge 2, Room 4106, Telephone Conference.
Contact Person: Ms. Josephine Pelham, Scientific Review Administrator, 6701 Rockledge Drive, Room 4106, Bethesda, Maryland 20892, (301) 435–1786.

Name of SEP: Microbiological and Immunological Sciences.
Date: November 7, 1996.
Time: 8:30 a.m.
Place: Holiday Inn-Bethesda, Bethesda, MD.
Contact Person: Dr. Jean Hickman, Scientific Review Administrator, 6701 Rockledge Drive, Room 4178, Bethesda, Maryland 20892, (301) 435–1146.

Name of SEP: Chemistry and Related Sciences.
Date: November 13–14, 1996.
Time: 7:30 a.m.
Place: One Washington Circle Hotel, Washington, DC.
Contact Person: Dr. Richard Panniers, Scientific Review Administrator, 6701 Rockledge Drive, Room 5106, Bethesda, Maryland 20892, (301) 435–1166.

Name of SEP: Behavioral and Neurosciences.
Date: November 15, 1996.
Time: 9:00 a.m.
Place: Holiday Inn-Chevy Chase, Chevy Chase, MD.
Contact Person: Dr. Herman Teitelbaum, Scientific Review Administrator, 6701 Rockledge Drive, Room 5190, Bethesda, Maryland 20892, (301) 435–1254.

Name of SEP: Clinical Sciences.
Date: December 3, 1996.
Time: 1:00 p.m.
Place: NIH, Rockledge 2, Room 4104, Telephone Conference.
Contact Person: Dr. Priscilla Chen, Scientific Review Administrator, 6701 Rockledge Drive, Room 4104, Bethesda, Maryland 20892, (301) 435–1787.

Name of SEP: Clinical Sciences.
Date: December 4, 1996.
Time: 1:00 p.m.
Place: NIH, Rockledge 2, Room 4104, Telephone Conference.
Contact Person: Dr. Priscilla Chen, Scientific Review Administrator, 6701 Rockledge Drive, Room 4104, Bethesda, Maryland 20892, (301) 435–1787.

Purpose/Agenda: To review Small Business Innovation Research.
Name of SEP: Chemistry and Related Sciences.
Date: November 3–5, 1996.
Time: 6:00 p.m.
Place: Crystal Gateway Marriott, Arlington, VA.
Contact Person: Dr. Richard Panniers, Scientific Review Administrator, 6701 Rockledge Drive, Room 5106, Bethesda, Maryland 20892, (301) 435–1166.

Name of SEP: Multidisciplinary Sciences.
Date: November 8, 1996.
Time: 1:00 p.m.
Place: Radisson Barcelo Hotel, Washington, DC.
Contact Person: Dr. Lee Rosen, Scientific Review Administrator, 6701 Rockledge Drive, Room 5116, Bethesda, Maryland 20892, (301) 435–1171.

Name of SEP: Microbiological and Immunological Sciences.
Date: November 13, 1996.
Time: 8:30 a.m.
Place: Holiday Inn-Bethesda, MD.
Contact Person: Dr. Mohindar Poonian, Scientific Review Administrator, 6701 Rockledge Drive, Room 4198, Bethesda, Maryland 20892, (301) 435–1218.

Name of SEP: Chemistry and Related Sciences.
Date: November 13–14, 1996.
Time: 8:00 a.m.
Place: Wyndham Bristol Hotel, Washington, DC.
Contact Person: Dr. Donald Schneider, Scientific Review Administrator, 6701 Rockledge Drive, Room 5104, Bethesda, Maryland 20892, (301) 435–1165.

Name of SEP: Behavioral and Neurosciences.
Date: November 14–15, 1996.
Time: 8:30 a.m.
Place: Ramada Inn, Rockville, MD.
Contact Person: Dr. Joe Marwah, Scientific Review Administrator, 6701 Rockledge Drive, Room 5188, Bethesda, Maryland 20892, (301) 435–1253.

Name of SEP: Behavioral and Physiological Sciences.
Date: November 15, 1996.
Time: 8:30 a.m.
Place: NIH, Rockledge 2, Room 6166, Telephone Conference.
Contact Person: Dr. Abubakar Shaikh, Scientific Review Administrator, 6701 Rockledge Drive, Room 6166, Bethesda, Maryland 20892, (301) 435–1042.

The meetings will be closed in accordance with the provisions set forth in secs. 552b(c)(4) and 552b(c)(6), Title 5, U.S.C. Applications and/or proposals and the discussions could reveal confidential trade secrets or commercial property such as patentable material

and personal information concerning individuals associated with the applications and/or proposals, the disclosure of which would constitute a clearly unwarranted invasion of personal privacy.

(Catalog of Federal Domestic Assistance Program Nos. 93.306, 93.333, 93,337, 93.393–93.396, 93.837–93.844, 93.846–93.878, 93.892, 93.893, National Institutes of Health, HHS)

Dated: September 27, 1996.

Paula N. Hayes,

Acting Committee Management Officer, NIH.

[FR Doc. 96–25435 Filed 10–3–96; 8:45 a.m.]

BILLING CODE 4140–01–M

Division of Research Grants; Notice of Closed Meeting

Pursuant to Section 10(d) of the Federal Advisory Committee Act, as amended (5 U.S.C. Appendix 2), notice is hereby given of the following Division of Research Grants Special Emphasis Panel (SEP) meeting:

Purpose/Agenda: To review individual grant applications.

Name of SEP: Biological and Physiological Sciences.

Date: October 4, 1996.

Time: 11:30 a.m.

Place: Holiday Inn, Chevy Chase, MD.

Contact Person: Dr. Ramesh Nayak, Scientific Review Administrator, 6701 Rockledge Drive, Room 5146, Bethesda, Maryland 20892, (301) 435–1026.

This notice is being published less than 15 days prior to the above meeting due to the urgent need to meet timing limitations imposed by the grant review and funding cycle.

The meeting will be closed in accordance with the provisions set forth in sections 552b(c)(4) and 552b(c)(6), Title 5, U.S.C. Applications and/or proposals and the discussions could reveal confidential trade secrets or commercial property such as patentable material and personal information concerning individuals associated with the applications and/or proposals, the disclosure of which would constitute a clearly unwarranted invasion of personal privacy.

(Catalog of Federal Domestic Assistance Program Nos. 93.306, 93.333, 93.337, 93.393–93.396, 93.837–93.844, 93.846–93.878, 93.892, 93.893, National Institutes of Health, HHS)

Dated: September 30, 1996.

Paula N. Hayes,

Acting Committee Management Officer, NIH.

[FR Doc. 96–25518 Filed 10–3–96; 8:45 am]

BILLING CODE 4140–01–M

Warren Grant Magnuson Clinical Center; Notice of Meeting of the Board of Governors of the Warren Grant Magnuson Clinical Center

Pursuant to Public Law 92–463, notice is hereby given of the meeting of the Board of Governors of the Warren Grant Magnuson Clinical Center, October 21, 1996. The meeting will be held at the National Institutes of Health, Building 1, 3rd Floor, Wilson Hall, 9000 Rockville Pike, Bethesda, Maryland 20892.

The entire meeting will be open to the public from 9:00 a.m. to adjournment, to provide the Board an orientation to the Clinical Center and discuss issues related to the Clinical Center funding, governance, planning, and reinvention. Attendance by the public will be limited to space available.

For further information, contact Ms. Maggi Stakem, Office of the Director, Warren Grant Magnuson Clinical Center, Building 10, Room 2C146, Bethesda, Maryland 20892, (301) 496–4114.

Individuals who plan to attend and need special assistance, such as sign language interpretation or other reasonable accommodations, should contact Ms. Stakem in advance of the meeting.

Dated: September 27, 1996.

Paula N. Hayes,

Acting Committee Management Officer, NIH.

[FR Doc. 96–25438 Filed 10–3–96; 8:45 am]

BILLING CODE 4140–01–M

DEPARTMENT OF HOUSING AND URBAN DEVELOPMENT

[Docket No. FR–4124–N–06]

Office of the Assistant Secretary for Community Planning and Development; Federal Property Suitable as Facilities To Assist the Homeless

AGENCY: Office of the Assistant Secretary for Community Planning and Development, HUD.

ACTION: Notice.

SUMMARY: This Notice identifies unutilized, underutilized, excess, and surplus Federal property reviewed by HUD for suitability for possible use to assist the homeless.

FOR FURTHER INFORMATION CONTACT: Mark Johnston, room 7256, Department of Housing and Urban Development, 451 Seventh Street SW, Washington, DC 20410; telephone (202) 708–1226; TDD number for the hearing- and speech-impaired (202) 708–2565 (these telephone numbers are not toll-free), or call the toll-free Title V information line at 1–800–927–7588.

SUPPLEMENTARY INFORMATION: In accordance with 24 CFR Part 581 and section 501 of the Stewart B. McKinney Homeless Assistance Act (42 U.S.C. 11411), as amended, HUD is publishing this Notice to identify Federal buildings and other real property that HUD has reviewed for suitability for use to assist the homeless.The properties were reviewed using information provided to HUD by Federal landholding agencies regarding unutilized and underutilized buildings and real property controlled by such agencies or by GSA regarding its inventory of excess or surplus Federal property. This Notice is also published in order to comply with the December 12, 1988 Court Order in *National Coalition for the Homeless* v. *Veterans Administration*, No. 88–2503–OG (D.D.C.).

Properties reviewed are listed in this Notice according to the following categories: Suitable/available, suitable/unavailable, suitable/to be excess, and unsuitable. The properties listed in the three suitable categories have been reviewed by the landholding agencies, and each agency has transmitted to HUD: (1) Its intention to make the property available for use to assist the homeless, (2) its intention to declare the property excess to the agency's needs, or (3) a statement of the reasons that the property cannot be declared excess or made available for use as facilities to assist the homeless.

Properties listed as suitable/available will be available exclusively for homeless use for a period of 60 days from the date of this Notice. Homeless assistance providers interested in any such property should send a written expression of interest to HHS, addressed to Brian Rooney, Division of Property Management, Program Support Center, HHS, room 5B–41, 5600 Fishers Lane, Rockville, MD 20857; (301) 443–2265. (This is not a toll-free number.) HHS will mail to the interested provider an application packet, which will include instructions for completing the application. In order to maximize the opportunity to utilize a suitable property, providers should submit their written expressions of interest as soon as possible. For complete details concerning the processing of applications, the reader is encouraged to refer to the interim rule governing this program, 24 CFR Part 581.

For properties listed as suitable/to be excess, that property may, if subsequently accepted as excess by GSA, be made available for use by the

homeless in accordance with applicable law, subject to screening for other Federal use. At the appropriate time, HUD will publish the property in a Notice showing it as either suitable/available or suitable/unavailable.

For properties listed as suitable/unavailable, the landholding agency has decided that the property cannot be declared excess or made available for use to assist the homeless, and the property will not be available.

Properties listed as unsuitable will not be made available for any other purpose for 20 days from the date of this Notice. Homeless assistance providers interested in a review by HUD of the determination of unsuitability should call the toll-free information line at 1–800–927–7588 for detailed instructions or write a letter to Mark Johnston at the address listed at the beginning of this Notice. Included in the request for review should be the property address (including zip code), the date of publication in the Federal Register, the landholding agency, and the property number.

For more information regarding particular properties identified in this Notice (*i.e.*, acreage, floor plan, existing sanitary facilities, exact street address), providers should contact the appropriate landholding agencies at the following addresses: Energy: Ms. Marsha Penhaker, Department of Energy, Facilities Planning and Acquisition Branch, FM–20, Room 6H–058, Washington, DC 20585, (202) 586–1191; GSA: Mr. Brian K. Polly, Assistant Commissioner, General Services Administration, Office of Property Disposal, 18th and F Streets, NW, Washington, DC 20405; (202) 501–0052; Transportation: Mr. Crawford F. Grigg, Director, Space Management, SVC–140, Transportation Administrative Service Center, Department of Transportation, 400 7th Street, SW, Room 2310, Washington, DC 20590; (202) 366–4246 (these are not toll-free numbers).

Dated: September 27, 1996.

Jacquie M. Lawing,

Deputy Assistant Secretary for Economic Development.

Title V, Federal Surplus Property Program
Federal Register Report for 10/04/96

Suitable/Available Properties

Buildings (by State)

Idaho

Bldg. CFA–613
Central Facilities Area
Idaho National Engineering Lab
Scoville Co: Butte ID 83415–
Landholding Agency: Energy
Property Number: 419630001
Status: Unutilized
Comment: 1219 sq. ft., most recent use—sleeping quarters, presence of asbestos, off-site use only.

Suitable/Unavailable Properties

Buildings (by State)

Colorado

Ft. Morgan Service Bldg.
Ft. Morgan Co: Morgan CO 80701–
Landholding Agency: Energy
Property Number: 419520002
Status: Excess
Comment: 132 sq. ft., metal substation bldg. on concete slab.

Unsuitable Properties

Buildings (by State)

Colorado

Bldg. 34
Grand Junction Projects Office
Grand Junction Co: Mesa CO 81503–
Landholding Agency: Energy
Property Number: 419540001
Status: Unutilized
Reason: Other; Secured Area
Comment: Contamination.

Bldg. 35
Grand Junction Projects Office
Grand Junction Co: Mesa CO 81503–
Landholding Agency: Energy
Property Number: 419540002
Status: Unutilized
Reason: Other; Secured Area
Comment: Contamination.

Bldg. 36
Grand Junction Projects Office
Grand Junction Co: Mesa CO 81503–
Landholding Agency: Energy
Property Number: 419540003
Status: Unutilized
Reason: Other; Secured Area
Comment: Contamination.

Bldg. 2
Grand Junction Projects Office
Grand Junction Co: Mesa CO 81503–
Landholding Agency: Energy
Property Number: 419610039
Status: Unutilized
Reason: Other; Secured Area
Comment: Contamination.

Bldg. 7
Grand Junction Projects Office
Grand Junction Co: Mesa CO 81503–
Landholding Agency: Energy
Property Number: 419610040
Status: Unutilized
Reason: Other; Secured Area
Comment: Contamination.

Bldg. 31–A
Grand Junction Projects Office
Grand Junction Co: Mesa CO 81503–
Landholding Agency: Energy
Property Number: 419610041
Status: Unutilized
Reason: Other; Secured Area
Comment: Contamination.

Bldg. 33
Grand Junction Projects Office
Grand Junction Co: Mesa CO 81503–
Landholding Agency: Energy
Property Number: 419610042
Status: Unutilized
Reason: Other; Secured Area
Comment: Contamination.

Connecticut

Bldgs 25 and 26
Prospect Hill Road
Windsor Co: Hartford CT 06095–
Landholding Agency: Energy
Property Number: 419440003
Status: Excess
Reason: Other; Secured Area.

9 Bldgs.
Knolls Atomic Power Lab, Windsor Site
Windsor Co: Hartford CT 06095–
Landholding Agency: Energy
Property Number: 419540004
Status: Excess
Reason: Secured Area.

Idaho

Bldg. PBF–621
Idaho National Engineering Laboratory
Scoville Co: Butte ID 83415–
Landholding Agency: Energy
Property Number: 419610001
Status: Unutilized
Reason: Secured Area.

Bldg. CPP–1609
Idaho National Engineering Laboratory
Scoville Co: Butte ID 83415–
Landholding Agency: Energy
Property Number: 419610002
Status: Unutilized
Reason: Secured Area.

Bldg. CPP–691
Idaho National Engineering Laboratory
Scoville Co: Butte ID 83415–
Landholding Agency: Energy
Property Number: 419610003
Status: Unutilized
Reason: Secured Area.

Bldg. CPP–625
Idaho National Engineering Laboratory
Scoville Co: Butte ID 83415–
Landholding Agency: Energy
Property Number: 419610004
Status: Unutilized
Reason: Secured Area.

Bldg. CPP–650
Idaho National Engineering Laboratory
Scoville Co: Butte ID 83415–
Landholding Agency: Energy
Property Number: 419610005
Status: Unutilized
Reason: Secured Area.

Bldg. CPP–608
Idaho National Engineering Laboratory
Scoville Co: Butte ID 83415–
Landholding Agency: Energy
Property Number: 419610006
Status: Unutilized
Reason: Secured Area.

Bldg. TAN–660
Idaho National Engineering Laboratory
Scoville Co: Butte ID 83415–
Landholding Agency: Energy
Property Number: 419610007
Status: Unutilized
Reason: Secured Area.

Bldg. TAN–636
Idaho National Engineering Laboratory
Scoville Co: Butte ID 83415–
Landholding Agency: Energy
Property Number: 419610008
Status: Unutilized
Reason: Secured Area.

Bldg. TAN–609
Idaho National Engineering Laboratory

Scoville Co: Butte ID 83415–
Landholding Agency: Energy
Property Number: 419610009
Status: Unutilized
Reason: Secured Area.

Bldg. TAN–670
Idaho National Engineering Laboratory
Scoville Co: Butte ID 83415–
Landholding Agency: Energy
Property Number: 419610010
Status: Unutilized
Reason: Secured Area.

Bldg. TAN–661
Idaho National Engineering Laboratory
Scoville Co: Butte ID 83415–
Landholding Agency: Energy
Property Number: 419610011
Status: Unutilized
Reason: Secured Area.

Bldg. TAN–657
Idaho National Engineering Laboratory
Scoville Co: Butte ID 83415–
Landholding Agency: Energy
Property Number: 419610012
Status: Unutilized
Reason: Secured Area.

Bldg. TRA–669
Idaho National Engineering Laboratory
Scoville Co: Butte ID 83415–
Landholding Agency: Energy
Property Number: 419610013
Status: Unutilized
Reason: Secured Area.

Bldg. TAN–637
Idaho National Engineering Laboratory
Scoville Co: Butte ID 83415–
Landholding Agency: Energy
Property Number: 419610014
Status: Unutilized
Reason: Secured Area.

Bldg. TAN–635
Idaho National Engineering Laboratory
Scoville Co: Butte ID 83415–
Landholding Agency: Energy
Property Number: 419610015
Status: Unutilized
Reason: Secured Area.

Bldg. TAN–638
Idaho National Engineering Laboratory
Scoville Co: Butte ID 83415–
Landholding Agency: Energy
Property Number: 419610016
Status: Unutilized
Reason: Secured Area.

Bldg. TAN–651
Idaho National Engineering Laboratory
Scoville Co: Butte ID 83415–
Landholding Agency: Energy
Property Number: 419610017
Status: Unutilized
Reason: Secured Area.

Bldg. TRA–673
Idaho National Engineering Laboratory
Scoville Co: Butte ID 83415–
Landholding Agency: Energy
Property Number: 419610018
Status: Unutilized
Reason: Secured Area.

Bldg. PBF–620
Idaho National Engineering Laboratory
Scoville Co: Butte ID 83415–
Landholding Agency: Energy
Property Number: 419610019
Status: Unutilized
Reason: Secured Area.

Bldg. PBF–616
Idaho National Engineering Laboratory
Scoville Co: Butte ID 83415–
Landholding Agency: Energy
Property Number: 419610020
Status: Unutilized
Reason: Secured Area.

Bldg. PBF–617
Idaho National Engineering Laboratory
Scoville Co: Butte ID 83415–
Landholding Agency: Energy
Property Number: 419610021
Status: Unutilized
Reason: Secured Area.

Bldg. PBF–619
Idaho National Engineering Laboratory
Scoville Co: Butte ID 83415–
Landholding Agency: Energy
Property Number: 419610022
Status: Unutilized
Reason: Secured Area.

Bldg. PBF–624
Idaho National Engineering Laboratory
Scoville Co: Butte ID 83415–
Landholding Agency: Energy
Property Number: 419610023
Status: Unutilized
Reason: Secured Area.

Bldg. PBF–625
Idaho National Engineering Laboratory
Scoville Co: Butte ID 83415–
Landholding Agency: Energy
Property Number: 419610024
Status: Unutilized
Reason: Secured Area.

Bldg. PBF–629
Idaho National Engineering Laboratory
Scoville Co: Butte ID 83415–
Landholding Agency: Energy
Property Number: 419610025
Status: Unutilized
Reason: Secured Area.

Bldg. PBF–604
Idaho National Engineering Laboratory
Scoville Co: Butte ID 83415–
Landholding Agency: Energy
Property Number: 419610026
Status: Unutilized
Reason: Secured Area.

Bldg. CF–673
Idaho National Engineering Laboratory
Scoville Co: Butte ID 83415–
Landholding Agency: Energy
Property Number: 419610027
Status: Unutilized
Reason: Secured Area.

Bldg. CF–672
Idaho National Engineering Laboratory
Scoville Co: Butte ID 83415–
Landholding Agency: Energy
Property Number: 419610028
Status: Unutilized
Reason: Secured Area.

Bldg. CF–664
Idaho National Engineering Laboratory
Scoville Co: Butte ID 83415–
Landholding Agency: Energy
Property Number: 419610029
Status: Unutilized
Reason: Secured Area.

Bldg. CF–643
Idaho National Engineering Laboratory
Scoville Co: Butte ID 83415–
Landholding Agency: Energy
Property Number: 419610030
Status: Unutilized
Reason: Secured Area.

Bldg. CF–649
Idaho National Engineering Laboratory
Scoville Co: Butte ID 83415–
Landholding Agency: Energy
Property Number: 419610031
Status: Unutilized
Reason: Secured Area.

Bldg. CF–652
Idaho National Engineering Laboratory
Scoville Co: Butte ID 83415–
Landholding Agency: Energy
Property Number: 419610032
Status: Unutilized
Reason: Secured Area.

Bldg. CF–656
Idaho National Engineering Laboratory
Scoville Co: Butte ID 83415–
Landholding Agency: Energy
Property Number: 419610033
Status: Unutilized
Reason: Secured Area.

Bldg. TRA–641
Idaho National Engineering Laboratory
Scoville Co: Butte ID 83415–
Landholding Agency: Energy
Property Number: 419610034
Status: Unutilized
Reason: Secured Area.

Bldg. CF–665
Idaho National Engineering Laboratory
Scoville Co: Butte ID 83415–
Landholding Agency: Energy
Property Number: 419610035
Status: Unutilized
Reason: Secured Area.

Bldg. CF–691
Idaho National Engineering Laboratory
Scoville Co: Butte ID 83415–
Landholding Agency: Energy
Property Number: 419610036
Status: Unutilized
Reason: Secured Area.

Bldg. CF–606
Idaho National Engineering Laboratory
Scoville Co: Butte ID 83415–
Landholding Agency: Energy
Property Number: 419610037
Status: Unutilized
Reason: Secured Area.

Louisiana

Weeks Island Facility
New Iberia Co: Iberia Parish LA 70560–
Landholding Agency: Energy
Property Number: 419610038
Status: Underutilized
Reason: Secured Area.

New Mexico

Bldgs. 9252, 9268
Kirtland Air Force Base
Albuquerque Co: Bernalillo NM 87185–
Landholding Agency: Energy
Property Number: 419430002
Status: Unutilized
Reason: Extensive deterioration.

McGee Warehouse
Los Alamos National Lab
Los Alamos NM 87545–
Landholding Agency: Energy
Property Number: 419610043

Status: Unutilized
Reason: Extensive deterioration.

Bldg. 73, TA–16
Los Alamos National Lab
Los Alamos Co: Los Alamos NM 87545–
Landholding Agency: Energy
Property Number: 419610044
Status: Unutilized
Reason: Within 2000 ft. of flammable or explosive material; Secured Area; Extensive deterioration.

Bldg. 75, TA–16
Los Alamos National Lab
Los Alamos Co: Los Alamos NM 87545–
Landholding Agency: Energy
Property Number: 419610045
Status: Unutilized
Reason: Within 2000 ft. of flammable or explosive material; Secured Area; Extensive deterioration.

Bldg. 76, TA–16
Los Alamos National Lab
Los Alamos Co: Los Alamos NM 87545–
Landholding Agency: Energy
Property Number: 419610046
Status: Unutilized
Reason: Within 2000 ft. of flammable or explosive material; Secured Area; Extensive deterioration.

Bldg. 77, TA–16
Los Alamos National Lab
Los Alamos Co: Los Alamos NM 87545–
Landholding Agency: Energy
Property Number: 419610047
Status: Unutilized
Reason: Within 2000 ft. of flammable or explosive material; Secured Area; Extensive deterioration.

Bldg. 78, TA–16
Los Alamos National Lab
Los Alamos Co: Los Alamos NM 87545–
Landholding Agency: Energy
Property Number: 419610048
Status: Unutilized
Reason: Within 2000 ft. of flammable or explosive material; Secured Area; Extensive deterioration.

Bldg. 79, TA–16
Los Alamos National Lab
Los Alamos Co: Los Alamos NM 87545–
Landholding Agency: Energy
Property Number: 419610049
Status: Unutilized
Reason: Within 2000 ft. of flammable or explosive material; Secured Area; Extensive deterioration.

Bldg. 80, TA–16
Los Alamos National Lab
Los Alamos Co: Los Alamos NM 87545–
Landholding Agency: Energy
Property Number: 419610050
Status: Unutilized
Reason: Within 2000 ft. of flammable or explosive material; Secured Area; Extensive deterioration.

Bldg. 99, TA–16
Los Alamos National Lab
Los Alamos Co: Los Alamos NM 87545–
Landholding Agency: Energy
Property Number: 419610051
Status: Unutilized
Reason: Within 2000 ft. of flammable or explosive material; Secured Area; Extensive deterioration.

Bldg. 89, TA–16
Los Alamos National Laboratory
Los Alamos Co: Los Alamos NM 87545–
Landholding Agency: Energy
Property Number: 419620005
Status: Unutilized
Reason: Within 2000 ft. of flammable or explosive material; Secured Area; Extensive deterioration.

Bldg. 90, TA–16
Los Alamos National Laboratory
Los Alamos Co: Los Alamos NM 87545–
Landholding Agency: Energy
Property Number: 419620006
Status: Unutilized
Reason: Within 2000 ft. of flammable or explosive material; Secured Area; Extensive deterioration.

Bldg. 91, TA–16
Los Alamos National Laboratory
Los Alamos Co: Los Alamos NM 87545–
Landholding Agency: Energy
Property Number: 419620007
Status: Unutilized
Reason: Within 2000 ft. of flammable or explosive material; Secured Area; Extensive deterioration.

5Bldg. 92, TA–16
Los Alamos National Laboratory
Los Alamos Co: Los Alamos NM 87545–
Landholding Agency: Energy
Property Number: 419620008
Status: Unutilized
Reason: Within 2000 ft. of flammable or explosive material; Secured Area; Extensive deterioration.

Bldg. 93, TA–16
Los Alamos National Laboratory
Los Alamos Co: Los Alamos NM 87545–
Landholding Agency: Energy
Property Number: 419620009
Status: Unutilized
Reason: Within 2000 ft. of flammable or explosive material; Secured Area; Extensive deterioration.

Bldg. 101, TA–16
Los Alamos National Laboratory
Los Alamos Co: Los Alamos NM 87545–
Landholding Agency: Energy
Property Number: 419620010
Status: Unutilized
Reason: Within 2000 ft. of flammable or explosive material; Secured Area; Extensive deterioration.

Tech Area II
Kirtland Air Force Base
Albuquerque Co: Bernalillo NM 87105–
Landholding Agency: Energy
Property Number: 419630004
Status: Unutilized
Reason: Within 2000 ft. of flammable or explosive material; Secured Area; Extensive deterioration.

Ohio

Fernald Env. Mgmt. Project
7400 Willey Road
Fernald Co: Hamilton OH 45030–
Landholding Agency: Energy
Property Number: 419540005
Status: Unutilized
Reason: Other
Comment: Contamination.

Mound—Guard Post
Mound Road
Miamisburg Co: Montgomery OH 45343–
Landholding Agency: Energy
Property Number: 419540006
Status: Unutilized
Reason: Within 2000 ft. of flammable or explosive material.

South Dakota

Bldg.—Huron Airport Hangar
Huron Regional Airport
Huron Co: Beadle SD 57350–
Landholding Agency: Energy
Property Number: 419510005
Status: Unutilized
Reason: Within airport runway clear zone.

Washington

Pistol Range Bldg.
USCG Port Angeles
Port Angeles Co: Clallam WA 98362–0159
Landholding Agency: DOT
Property Number: 879630030
Status: Unutilized
Reason: Within airport runway clear zone; Secured Area; Extensive deterioration.

Land (by State)

Louisiana

Site No. 17
Lazarre Point
West Monroe Co: Ouachita Parish LA 71291–
Landholding Agency: GSA
Property Number: 549630021
Status: Excess
Reason: Floodway
GSA Number: 7–D–LA–0550.

[FR Doc. 96–25300 Filed 10–3–96; 8:45 am]

BILLING CODE 4210–29–M

DEPARTMENT OF THE INTERIOR

Office of the Secretary

Alaska Land Managers' Forum

AGENCY: Office of the Secretary, Interior.

ACTION: Notice of meeting.

SUMMARY: This notice is published in accordance with section 10(a)(2) of the Federal Advisory Committee Act (FACA), 5 U.S.C. App. (1988) and 41 CFR 101–6.1015(b). The Department of the Interior hereby gives notice of a public meeting of the Alaska Land Managers' Forum to be held at 9 a.m. on November 1, 1996.

The meeting will take place at the EVOS Trustee Council Restoration Office, first floor conference room, 645 G Street, Anchorage, Alaska. This inaugural meeting will be held to discuss organization and proposed work for fiscal year 1997.

FOR FURTHER INFORMATION CONTACT: Ronald B. McCoy, (907) 271–5485; or Sally Rue, (907) 465–4084.

Dated: September 30, 1996.

Juliette Falkner,

Special Assistant to the Secretary.

[FR Doc. 96–25477 Filed 10–3–96; 8:45 am]

BILLING CODE 4310–RP–M

Fish and Wildlife Service

Emergency Exemption Issuance

The Florida Game and Fresh Water Fish Commission has been authorized, via permit number PRT–819908, by the U.S. Fish and Wildlife Service's Southeast Region to capture, retain for veterinary treatment, and release a specific Florida panther, Felis concolor coryi. The 30-day public comment period required by the Endangered Species Act was waived in accordance with Section 10(c) of the Endangered Species Act of 1973, as amended (16 U.S.C. 1531 *et seq.*). The Fish and Wildlife Service determined that an emergency affecting the life and health of the subject Florida panther existed and no reasonable alternative other than treating it in captivity was available to the applicant. The subject Florida panther suffers from a fungal infection that requires veterinary treatment in captivity for an extended period of time. Treatment is expected to last up to 6 months and the Florida panther will be returned to its home territory. This specific Florida panther is a successful breeder and is important for recovery of the species.

Dated: September 26, 1996.

Judy L. Jones,

Acting Regional Director.

[FR Doc. 96–25475 Filed 10–3–96; 8:45 am]

BILLING CODE 4310–55–P

Notice of Availability of Final Environmental Impact Statement

SUMMARY: This notice advises the public that the final Environmental Impact Statement (EIS) for water rights acquisition for the Lahontan Valley Wetlands, Churchill County, Nevada, is available for public review. Five alternatives are being considered, including the Proposed Action. This notice is being furnished pursuant to section 102(2)(C) of the National Environmental Policy Act of 1969.

DATES: A Record of Decision will be issued no sooner than 30 days following the publication of the Notice of Availability of the final EIS filed by the Environmental Protection Agency.

ADDRESSES: Copies of the final EIS may be inspected at the following locations:

U.S. Fish and Wildlife Service, Division of Refuges and Wildlife, Eastside Federal Complex, Third Floor, 911 N.E. 11th Avenue, Portland, OR 97232

Stillwater National Wildlife Refuge, 1000 Auction Road, Fallon, NV 89406

Churchill County Public Library, 553 South Maine St., Fallon, NV 89406

Nevada State Library and Archives, Reference Desk, 1000 Stewart Street, Carson City, NV 89701

Washoe County Public Library, Reno Branch, 301 S. Center Street, Reno, NV 89501

FOR FURTHER INFORMATION CONTACT: Refuge Manager, Stillwater National Wildlife Refuge, P.O. Box 1236, Fallon, NV 89407, (702) 423–5128.

Individuals desiring a copy of the final EIS should contact the above address. Copies have been sent to all agencies and individuals who participated in the scoping process and were added to the mailing list, and to those people that requested to be added to the mailing list.

SUPPLEMENTARY INFORMATION: The Truckee-Carson-Pyramid Lake Water Rights Settlement Act (Public Law 101–618) directs the Secretary of the Interior to acquire enough water and water rights to sustain, on a long-term average, approximately 25,000 acres of primary wetland habitat in the Lahontan Valley. Primary wetland habitat refers to wetland habitat within Stillwater National Wildlife Refuge, Stillwater Wildlife Management Area, Carson Lake and Pasture, and Fallon Paiute-Shoshone Indian Reservation wetlands. It was determined that up to 125,000 acre-feet (AF) of water will be needed each year to sustain a long-term average of 25,000 acres of primary wetland habitat. Consequently, the U.S. Fish and Wildlife Service (Service) developed and analyzed four alternatives, including the Proposed Action, for securing up to 125,000 acre-feet (AF) of water for Lahontan Valley wetlands. A No Action Alternative was also developed and analyzed. The purpose of the final EIS is to analyze the potential consequences of the five alternatives being considered.

A draft EIS describing and evaluating the alternatives was released in July 1995, followed by a 90-day public comment period. The Service reviewed, carefully considered, and responded to all comments received on the draft EIS. The document was revised based on comments received and on necessary factual corrections and editorial changes.

The five alternatives are: (1) No Action Alternative, which includes the acquisition of 20,000 AF of water rights from within the Carson Division of the Newlands Project; (2) Proposed Action, which proposes the purchase of up to 122,000 AF of water rights; (3) Least Cost Alternative, which would result in the purchase of up to 100,000 AF of water rights; (4) Maximum Acquisition Alternative, which would result in up to 133,500 AF being purchased; and (5) the Service's Preferred Alternative, which would result in (a) the acquisition of up to 75,000 AF of water rights in the Carson Division, (b) leasing of water, (c) acquisition of water rights from the Middle Carson River corridor, (d) use of conserved U.S. Navy water as available, and (e) pumping of groundwater. Alternatives 2–5 each include the acquisition of 20,000 AF under the No Action Alternative.

Under the Preferred Alternative, the Service would acquire sufficient water and water rights to provide a total annual average of 125,000 AF of inflow to primary wetland areas to achieve the objective of sustaining 25,000 acres of primary wetland habitat in the Lahontan Valley. The amount acquired by the Service would supplement available drainwater, spills, water being acquired by the Service under earlier authorizations, and water being acquired by the State of Nevada for primary wetland areas.

To meet the needed 125,000 AF of annual average wetland inflow, the Service would, under the Preferred Alternative, acquire up to 75,000 AF of water rights (including the ongoing 20,000 AF acquisition program). This would amount to about 40 percent of the water rights in the Carson Division of the Newlands Irrigation Project (Newlands Project). Because the Service would exercise a use-rate of 2.99 AF/acre for the agricultural water rights acquired (which have 3.5 and 4.5 AF/acre/year entitlements), the wetlands would receive an annual average of about 62,000 AF from this source of water. Under this alternative, it is expected that about 19,700 AF of agricultural drainflows and about 9,700 AF of Lahontan Reservoir spill-water would reach the primary wetland areas on average over the long term. A combination of other methods (e.g., leasing) and other sources would be used, under the Preferred Alternative, to meet the 125,000 AF/year demand for wetland protection. These sources would contribute an average of about 33,600 AF/year to the wetland demand.

Purchase of water rights would be from willing sellers only. In addition to purchase and leasing of water rights, donations and exchange of water rights would be utilized as opportunities arise.

The final EIS evaluates the Preferred Alternative and other alternatives relative to their potential effects on: (1) Newlands Project operations and infrastructure; (2) water resources; (3) biological resources; (4) regional agriculture, farmlands, and the local economy; (5) regional recreation; (6) land use; (7) social values; (8) Indian trust assets; and (9) cultural resources. Estimated acquisition costs are also disclosed.

Dated: September 24, 1996.

John H. Doebel,

Acting Regional Director, Region 1, Portland, Oregon.

[FR Doc. 96–25166 Filed 10–3–96; 8:45 am]

BILLING CODE 4310–55–M

Bureau of Land Management

[MT–921–06–1320–01–P; NDM 85515]

Notice of Coal Lease Application—NDM 85515—The Coteau Properties Company

AGENCY: Bureau of Land Management, Department of the Interior.

ACTION: Notice.

SUMMARY: This is notice of The Coteau Properties Company's Coal Lease Application NDM 85515 for certain coal resources within the Fort Union Coal Region.

The land included in Coal Lease Application NDM 85515 is located in Mercer County, North Dakota, and is described as follows:

T. 145 N., R. 87 W., 5th P.M.
Sec. 2: Lot 3, SE¼NW¼

The 79.470-acre tract contains an estimated 1 million tons of recoverable coal reserves.

The application will be processed in accordance with the provisions of the Mineral Leasing Act of 1920, as amended (30 U.S.C. 181 *et seq.*), and the implementing regulations at 43 CFR 3400. A decision to allow leasing of the coal resources in said tract will result in a competitive lease sale to be held at a time and place to be announced through publication pursuant to 43 CFR part 3422.

SUPPLEMENTARY INFORMATION: The Coteau Properties Company is the lessee and operator of Coal Lease NDM 78697 at the Freedom Mine. The entire area included within this lease application lies within the Freedom Mine NACT 9101 permit area.

On November 3, 1994, The Coteau Properties Company received Federal Coal Exploration License NDM 83356 from the BLM to conduct drilling on lands contained within the Coteau Properties coal lease application tract.

The area applied for would be mined as an extension of the Freedom Mine and would utilize the same methods as those currently being used. The lease being applied for can extend the life of the mine by about 1 month and enable recovery of coal that might never be mined if not mined as a logical extension of current pits.

NOTICE OF AVAILABILITY: The application is available for review between the hours of 9 a.m. and 4 p.m. at the Bureau of Land Management, Montana State Office, 222 North 32nd Street, Billings, Montana 59101, and at the Bureau of Land Management, Dakotas District Office, whose address is 2033 Third Avenue West, Dickinson, North Dakota 58601–2619, between the hours of 8 a.m. and 4 p.m.

FOR FURTHER INFORMATION CONTACT: Ed Hughes, telephone 406–255–2830, Bureau of Land Management, Montana State Office, 222 North 32nd Street, P.O. Box 36800, Billings, Montana 59107–6800.

Dated: September 24, 1996.

Francis R. Cherry, Jr.,

Acting State Director.

[FR Doc. 96–25445 Filed 10–3–96; 8:45 am]

BILLING CODE 4310–DN–P

[MT–921–06–1320–01–P; NDM 85516]

Notice of Coal Lease Application—NDM 85516—The Falkirk Mining Company

AGENCY: Bureau of Land Management, Department of the Interior.

ACTION: Notice.

SUMMARY: This is Notice of The Falkirk Mining Company's Coal Lease Application NDM 85516 for certain coal resources within the Fort Union Coal Region.

The land included in Coal Lease Application NDM 85516 is located in McLean County, North Dakota, and is described as follows:

T. 146 N., R. 81 W., 5th P.M.
Sec. 30: Lot 4, SE¼SW¼, S½SE¼

The 158.75-acre tract contains an estimated 1.7 million tons of recoverable coal reserves.

The application will be processed in accordance with the provisions of the Mineral Leasing Act of 1920, as amended (30 U.S.C. 181, et seq.), and the implementing regulations at 43 CFR 3400. A decision to allow leasing of the coal resources in said tract will result in a competitive lease sale to be held at a time and place to be announced through publication pursuant to 43 CFR 3422.

SUPPLEMENTARY INFORMATION: The entire area included within this lease application lies within the Falkirk Mine NAFK 9601 permit area. The area applied for would be mined as an extension of the Falkirk Mine and would utilize the same methods as those currently being used. The lease being applied for can extend the life of the mine by about 3 months and enable recovery of coal that might never be mined if not mined as a logical extension of current pits.

NOTICE OF AVAILABILITY: The application is available for review between the hours of 9 a.m. and 4 p.m. at the Bureau of Land Management, Montana State Office, 222 North 32nd Street, Billings, Montana 59101, and at the Bureau of Land Management, Dakotas District Office, whose address is 2033 Third Avenue West, Dickinson, North Dakota 58601–2619, between the hours of 8 a.m. and 4 p.m.

FOR FURTHER INFORMATION CONTACT: Ed Hughes, telephone 406–255–2830, Bureau of Land Management, Montana State Office, 222 North 32nd Street, P.O. Box 36800, Billings, Montana 59107–6800.

Dated: September 24, 1996.

Francis R. Cherry, Jr.,

Acting State Director.

[FR Doc. 96–25446 Filed 10–3–96; 8:45 am]

BILLING CODE 4310–DN–P

[MT–921–06–1320–01–P; NDM 85517]

Notice of Coal Lease Application—NDM 85517—The Coteau Properties Company

AGENCY: Bureau of Land Management, Department of the Interior.

ACTION: Notice.

SUMMARY: This is Notice of The Coteau Properties Company's Coal Lease Application NDM 85517 for certain coal resources within the Fort Union Coal Region.

The land included in Coal Lease Application NDM 85517 is located in Mercer County, North Dakota, and is described as follows:

T. 146 N., R. 87 W., 5th P.M.
Sec. 30: Lot 2
T. 146 N., R. 88 W., 5th P.M.
Sec. 26: SE¼SE¼
Sec. 34: E½

The 398.790-acre tract contains an estimated 5.6 million tons of recoverable coal reserves.

The application will be processed in accordance with the provisions of the Mineral Leasing Act of 1920, as amended (30 U.S.C. 181, et seq.), and the implementing regulations at 43 CFR 3400. A decision to allow leasing of the

coal resources in said tract will result in a competitive lease sale to be held at a time and place to be announced through publication pursuant to 43 CFR 3422.

SUPPLEMENTARY INFORMATION: The Coteau Properties Company is the lessee and operator of Coal Lease NDM 071813 at the Freedom Mine. The entire area included within this lease application lies within the Freedom Mine NACT 9501 permit area.

On November 3, 1994, The Coteau Properties Company received Federal Coal Exploration License NDM 83356 from the BLM to conduct drilling on lands contained within the Coteau Properties coal lease application tract.

The area applied for would be mined as an extension of the Freedom Mine and would utilize the same methods as those currently being used. The lease being applied for can extend the life of the mine by about 4 months and enable recovery of coal that might never be mined if not mined as a logical extension of current pits.

NOTICE OF AVAILABILITY: The application is available for review between the hours of 9 a.m. and 4 p.m. at the Bureau of Land Management, Montana State Office, 222 North 32nd Street, Billings, Montana 59101, and at the Bureau of Land Management, Dakotas District Office, whose address is 2033 Third Avenue West, Dickinson, North Dakota 58601–2619, between the hours of 8 a.m. and 4 p.m.

FOR FURTHER INFORMATION CONTACT: Ed Hughes, telephone 406–255–2830, Bureau of Land Management, Montana State Office, 222 North 32nd Street, P.O. Box 36800, Billings, Montana 59107–6800.

Dated: September 24, 1996.

Francis R. Cherry, Jr.,

Acting State Director.

[FR Doc. 96–25447 Filed 10–3–96; 8:45 am]

BILLING CODE 4310–DN–P

[MT–921–06–1320–01–P; NDM 85537]

Notice of Coal Lease Application—NDM 85537 Acquired—The Coteau Properties Company

AGENCY: Bureau of Land Management, Department of the Interior.

ACTION: Notice.

SUMMARY: This is Notice of The Coteau Properties Company's Coal Lease Application NDM 85537 Acquired for certain coal resources within the Fort Union Coal Region.

The land included in Coal Lease Application NDM 85537 Acquired is located in Mercer County, North Dakota, and is described as follows:

T. 146 N., R. 87 W., 5th P.M.

Sec. 31: NE¼

The 160.00-acre tract contains an estimated 1 million tons of recoverable coal reserves.

Pursuant to Public Law 760 of September 6, 1950 (7 U.S.C. 1033–1039), all mineral interests owned by the United States which were reserved or acquired under programs administered by the Governmental agencies mentioned therein, and which were not disposed of by the Secretary of Agriculture, were transferred to the Department of the Interior, after September 6, 1957, for administration under the mineral laws. A quitclaim deed, identified as FFM–ND–1145, dated September 6, 1957, was received from the Federal Farm Mortgage Corporation, transferring 50 percent mineral interests in the aforementioned lands.

The application will be processed in accordance with the provisions of the Mineral Leasing Act for Acquired Lands of 1947, (61 Stat. 913, 30 U.S.C. 351–359), and the implementing regulations at 43 CFR 3400. A decision to allow leasing of the coal resources in said tract will result in a competitive lease sale to be held at a time and place to be announced through publication pursuant to 43 CFR 3422.

SUPPLEMENTARY INFORMATION: The Coteau Properties Company is the lessee and operator of Coal Lease NDM 071813 at the Freedom Mine. The entire area included within this lease application lies within the Freedom Mine NACT 9501 permit area.

On November 3, 1994, The Coteau Properties Company received Federal Coal Exploration License NDM 83357 from the BLM to conduct drilling on lands contained within the Coteau Properties coal lease application tract.

The area applied for would be mined as an extension of the Freedom Mine and would utilize the same methods as those currently being used. The lease being applied for can extend the life of the mine by about 1 month and enable recovery of coal that might never be mined if not mined as a logical extension of current pits.

NOTICE OF AVAILABILITY: The application is available for review between the hours of 9 a.m. and 4 p.m. at the Bureau of Land Management, Montana State Office, 222 North 32nd Street, Billings, Montana 59101, and at the Bureau of Land Management, Dakotas District Office, whose address is 2033 Third Avenue West, Dickinson, North Dakota 58601–2619, between the hours of 8 a.m. and 4 p.m.

FOR FURTHER INFORMATION CONTACT: Ed Hughes telephone 406–255–2830, Bureau of Land Management, Montana State Office, 222 North 32nd Street, P.O. Box 36800, Billings, Montana 59107–6800.

Dated: September 24, 1996.

Francis R. Cherry, Jr.,

Acting State Director.

[FR Doc. 96–25448 Filed 10–3–96; 8:45 am]

BILLING CODE 4310–DN–P

[UT–060–06–1310–00]

Notice of Availability of Draft Price Coalbed Methane Environmental Impact Statement

AGENCY: Bureau of Land Management, Department of Interior.

ACTION: Notice of availability of Draft Price Coalbed Methane Environmental Impact Statement.

SUMMARY: In accordance with Section 102 of the National Environmental Policy Act of 1969, a Draft Environmental Impact Statement (DEIS) has been prepared for the Price Coalbed Methane Project and is available for distribution to the public.

River Gas Corporation of Northport, Alabama proposes to develop a coalbed methane (CBM) gas production field in Carbon and Emery Counties, Utah. The proposed project would involve the construction (wellpads), drilling, and completion/stimulation of 601 CBM gas wells and associated access roads, pipelines, and electrical distribution lines over approximately a 10-year period within an approximately 290-square mile project area. Life of project would be approximately 30 years. A maximum of four CBM gas wells per square mile (160-acre spacing) would be developed on leased acreage (Federal, state, and private) in accordance with procedures and guidelines of the Utah Division of Oil, Gas & Mining and the Bureau of Land Management (BLM).

Copies of the DEIS will be available at libraries in Moab, Price, and Castle Dale, Utah. Copies will also be available from the Moab District Office, 82 East Dogwood, Moab, Utah 84532, the Price BLM Office, 125 South 600 West, Price, Utah 84501, and the BLM Utah State Office, 324 South State, P.O. Box 45155, Salt Lake City, Utah, 84105–0155.

DATES: Written comments on the DEIS will be accepted for a period of 45 days following Federal Register publication of the Notice of Availability by the Environmental Protection Agency (EPA). The anticipated date of EPA Federal Register publication is October 18, 1996. Comments must therefore be

submitted or postmarked no later than December 2, 1996 in order to be considered. Oral and/or written comments may also be presented at public meetings to be held November 13 at the Courthouse in Price, Utah and November 14 at the Courthouse in Castledale, Utah. Meeting times will be announced through local news media.

ADDRESSES: Written comments on the DEIS should be addressed to: Kate Kitchell, Moab Field Office Manager, Bureau of Land Management, 82 East Dogwood, Moab, Utah, 84532.

FOR FURTHER INFORMATION CONTACT: Daryl Trotter, Project Coordinator, Moab Field Office, Bureau of Land Management, 82 East Dogwood, Moab, Utah, 84532, (801) 259–6111.

SUPPLEMENTARY INFORMATION: The purpose of this EIS is to provide decision makers and the public with information pertaining to River Gas's proposal, and to disclose environmental impacts and identify mitigation measures to reduce impacts.

The DEIS analyzes a proposal by River Gas Corporation of Northport, Alabama, to locate, drill, complete, and produce 601 CBM wells over a 10-year period in an approximately 290-square mile project area in Carbon and Emery Counties, Utah at 160-acre spacing. The proposed action would also include the construction and operation of access roads, gas and water collection pipelines/flowlines, high-pressure delivery pipelines, and electrical utilities within a transportation corridor system accessing all wells.

The DEIS also analyzes four alternatives: (1) Field development at 80-acre spacing; (2) field development at 160-acre and 80-acre spacing, precluding well drilling on Federal mineral estate within boundaries of critical deer and elk winter range; (3) field development at 160-acre and 80-acre spacing, precluding well drilling and operations on Federal mineral estate in security habitat areas (concentration areas) within critical winter range for mule deer and elk; and (4) No Action alternative.

BLM's preferred alternative is field development at 160-acre spacing, precluding well drilling and operations on Federal mineral estate in security habitat areas.

Dated: September 27, 1996.

Kate Kitchell,

Moab Field Office Manager.

[FR Doc. 96–25449 Filed 10–3–96; 8:45 am]

BILLING CODE 4310–DQ–P

[(CA-067-7122-6663); CACA–29996]

Realty Action; Proposed Sale of Public Land

AGENCY: Bureau of Land Management, Interior.

ACTION: Notice.

SUMMARY: The following land has been found suitable for sale under Section 203 of the Federal Land Policy and Management Act of 1976 (43 U.S.C. 1713), at not less than the appraised fair market value of $24,000:

San Bernardino Meridian, Imperial County, California

T. 10 S., R. 13 E.,
Sec. 10, E½NE¼ (80 acres)

This land will not be offered for sale for at least 60 days following the date of this notice.The sale will be by modified competitive procedures. Persons permitted to bid will be limited to the adjacent landowners. The petitioner of this proposed sale will be given the opportunity to meet the highest bid received. Sale will be by sealed bid only. All sealed bids must be submitted to the BLM's El Centro Resource Area Office, 1661 South 4th Street, El Centro, CA 92243 no later than 4:30 p.m., December 2, 1996. Bids must be for not less than the appraised $24,000. Each sealed bid must be accompanied by a certified check, postal money order, bank draft, or cashier's check made payable to USDI/BLM for not less than 10 percent of the amount bid. Federal law requires that all bidders be U.S. citizens 18 years of age or over, or in the case of corporations, be subject to the laws of any State or of the U.S. These lands contain no known locatable or salable mineral values, however the property is classified as being prospectively valuable for geothermal resources. Locatable and salable mineral interests will be conveyed simultaneously with the land. Leasable minerals will be reserved to the U.S.

DATES: For a period of 45 days after publication of this notice in the Federal Register, interested parties may submit comments to the Area Manager, Bureau of Land Management, El Centro Resource Area, 1661 South 4th Street, El Centro, CA 92243. Objections will be reviewed by the State Director, who may sustain, vacate, or modify this realty action. In the absence of any objections, this realty action will become the final determination of the Department of the Interior.

FOR FURTHER INFORMATION CONTACT: Linda Self, Realty Specialist, at the above address or telephone (619) 337–4426.

SUPPLEMENTARY INFORMATION: Publication of this Notice in the Federal Register segregates the public land to the extent that it will not be subject to appropriation under the public land laws, including the mining laws. The segregative effect of this notice shall terminate upon issuance of patent or other conveyance document, publication in the Federal Register of a termination of the segregation or 270 days from the date of publication, whichever occurs first. The patent, when issued, will contain a reservation of ditches and canals to the U.S.

Dated: September 27, 1996.

Terry A. Reed,

Area Manager.

[FR Doc. 96–25441 Filed 10–3–96; 8:45 am]

BILLING CODE 4310–40–P

[ID–056–1430–01]

Notice of Realty Action: State Indemnity Selection Classification, Jerome County, ID (IDI–31387)

AGENCY: Bureau of Land Management, Interior.

ACTION: Notice.

SUMMARY: The following public land in Jerome County, Idaho has been examined and found suitable for classification and conveyance to the State of Idaho under the provisions of Sections 2275 and 2276 of the Revised Statutes, as amended (43 U.S.C. 851, 852). It will be managed by the State as school endowment land to provide the highest possible return to the school endowment fund.

T. 8 S., R. 17 E., Boise Meridian
Section 13, NW¼, N½SW¼, SW¼SW¼, NW¼SE¼.

The land is not needed for federal purposes. Conveyance is consistent with current and proposed Bureau of Land Management and local planning and is in the public interest.

When issued, the patent will be subject to the following terms, conditions and reservations:

1. A reservation to the United States of America for rights-of-way for ditches and canals constructed by the authority of the Act of Congress approved August 30, 1890 (43 U.S.C. 945).
2. A reservation to the United States of America under 44 L.D. 513, IDI–013419, FAA communication facility.
3. Material Site Right-of-Way IDI–20199, Idaho Transportation Dept.

The following communication site rights-of-way:

4. IDI–09728, AT&T Communications.
5. IDI–16896, Auto Phone Corp.
6. IDI–20185, B&B Broadcasting.

7. IDI–25388, Michael Dahmer.
8. IDI–017078, Eugene TV, Inc.
9. IDI–27274, IBM Corp.
10. IDI–04734, ID Bureau of Comm.
11. IDI–25394, ID Board of Education.
12. IDI–25489, ID Board of Education.
13. IDI–22070, IHT Wireless Cable.
14. IDI–23104, KART Broadcasting.
15. IDI–22678, King Broadcasting Co.
16. IDI–26678, KIVI Channel 6.
17. IDI–04072, KMVT Broadcasting.
18. IDI–21043, Falls Broadcasting.
19. IDI–14464, NOAA.
20. IDI–09099, Northside Canal Co.
21. IDI–5964, Radio Paging Service.
22. IDI–04600, Radio Service Co.
23. IDI–26720, State Board of Education.
24. IDI–29614, Tel-Car, Inc.
25. IDI–016274, Union Pacific RR.
26. IDI–013093, U.S. West.
27. IDI–26291, AT&T Communications.

Buried Telephone Cable right-of-way:

28. IDI–24171, U.S. West Communications.

Powerline and Access road rights-of-way:

29. IDI–04530, 013044, and 12259, Idaho Power Co.

Detailed information regarding this action is available for review at the office of the Shoshone Resource Area, Bureau of Land Management, 400 West F Street, Shoshone, Idaho.

For a period of 45 days from the publication of this notice in the Federal Register, interested parties may submit comments regarding the proposed conveyance or classification of the land to the Area Manager, Shoshone Resource Area Office, P.O. Box 2–B, Shoshone, ID 83352.

Classification Comments: Interested parties may submit comments involving the suitability of these lands for disposal for public purposes. Comments on the classification are restricted to whether the land is physically suited for the proposal, whether the use will maximize the future use or uses of the land, whether the use is consistent with local planning and zoning, or if the use is consistent with state and federal programs.

Application Comments: Interested parties may submit comments regarding the disposal of these lands to the State of Idaho to generate income for the school endowment fund, whether the BLM followed proper administrative procedures in reaching the decision, any other factor not directly related to the suitability of the land for public purposes.

Comments received on the classification will be answered by the State Director with the right to further comment to the Secretary. Comments on the application will be answered by the State Director with the right of appeal to the Interior Board of Land Appeals (IBLA).

Any adverse comments not resolved at the Resource Area level will be reviewed by the State Director. In the absence of any adverse comments, the classification will become effective 60 days from the date of publication of this notice in the Federal Register.

Dated: September 25, 1996.

Bill Baker,

Area Manager, Shoshone Resource Area.

[FR Doc. 96–25450 Filed 10–3–96; 8:45 am]

BILLING CODE 4310–GG–P

[(NV–930–1430–01) N–56217]

Notice of Realty Action: Direct Sale of Public Land in Esmeralda County, NV; Correction

AGENCY: Bureau of Land Management, Interior.

ACTION: Notice of correction.

SUMMARY: This notice corrects an error in the land description published in the Federal Register, 61 FR 37764, July 19, 1996, for a proposed land sale.

FOR FURTHER INFORMATION CONTACT: Nicholas M. Williams, Realty Specialist, Bureau of Land Management, Tonopah Field Station, P.O. Box 911, Building 102 Military Circle, Tonopah, Nevada, 89049, (702)482–7800.

SUPPLEMENTARY INFORMATION: The land description in the Notice of Realty Action, 61 FR 37764, July 19, 1996, is corrected as follows:

On page 37764 in column 2, line 28 from the bottom of the column, which reads ''NW¼SW¼S½SW¼,'' is hereby corrected to read ''NE¼SW¼, S½SW¼.''

Dated: September 24, 1996.

Gerald M. Smith,

District Manager.

[FR Doc. 96–25453 Filed 10–3–96; 8:45 am]

BILLING CODE 4310–HC–P

[CO–930–1920–00–4357; COC–59980]

Proposed Withdrawal; Opportunity for Public Meeting; Colorado

AGENCY: Bureau of Land Management, Interior.

ACTION: Notice.

SUMMARY: The U.S. Department of Energy (DOE) proposes to withdraw 200 acres of public land and 160 acres of public domain minerals for 50 years to protect the public and the U.S. Government by restricting public use of a contaminated site. This land was previously withdrawn by Public Land Order No. 5344 which has expired. However, the land has not been opened to operation of the public land laws. This order closes the land to operation of the public land laws and to location and entry under the mining laws for up to two years while the application is processed. This order also relieves the land of the segregative effect of Public Land Order 5344. The proposed withdrawal will close the land and allow DOE to test and determine when the land is suitable for public use. The land remains open to mineral leasing subject to approval by the DOE.

DATES: Comments on this proposed withdrawal or requests for public meeting must be received on or before January 2, 1997.

ADDRESSES: Comments and requests for a meeting should be sent to the Colorado State Director, BLM, 2850 Youngfield Street, Lakewood, Colorado 80215–7076.

FOR FURTHER INFORMATION CONTACT: Doris E. Chelius, 303–239–3706.

SUPPLEMENTARY INFORMATION: On September 16, 1996, the Department of Energy filed an application to withdraw the following described public land and public minerals:

Sixth Principal Meridian

T. 3 S., R. 98 W.,
Sec. 10, SE¼SE¼;
Sec. 11, SW¼SW¼;
Sec. 14, NW¼NW¼;
Sec. 15, E½NE¼.

The area described contains 200 acres of public lands in Rio Blanco County.

Sixth Principal Meridian

T. 3 S., R. 98 W.,
Sec. 11, SE¼SW¼;
Sec. 14, E½NW¼ and SW¼NW¼.

The area described contains 160 acres of public domain minerals.

Effective on date of publication the described land is segregated as specified above by this application and relieved of the segregative effect of Public Land Order No. 5344.

The purpose of this withdrawal is to close the land to public use because of possible contamination. For a period of 90 days from the date of publication of this notice, all parties who wish to submit comments, suggestions, or objections in connection with this proposed withdrawal, or to request a public meeting, may present their views in writing to the Colorado State Director. If the authorized officer determines that a meeting should be held, the meeting will be scheduled and

conducted in accordance with 43 CFR 2310.3–1(c)(2).

This application will be processed in accordance with the regulations set forth in 43 CFR 2310.

For a period of two years from the date of publication in the Federal Register, this land will be segregated from operation of the public land laws, including the mining laws, as specified above, unless the application is denied or cancelled or the withdrawal is approved prior to that date. During this period the Bureau of Land Management, in conjunction with the Department of Energy, will continue to manage this land.

Herbert Olson,

Acting Realty Officer.

[FR Doc. 96–25443 Filed 10–3–96; 8:45 am]

BILLING CODE 4310–JB–P

National Park Service

Notice of Inventory Completion for Native American Human Remains from Shaktoolik, AK, in the Control of the Alaska State Office, Bureau of Land Management, Anchorage, AK

AGENCY: National Park Service, Interior.

ACTION: Notice.

Notice is hereby given in accordance with provisions of the Native American Graves Protection and Repatriation Act (NAGPRA), 25 U.S.C. 3003 (d), of the completion of an inventory of human remains in the control of the Alaska State Office, Bureau of Land Management, Anchorage, AK.

A detailed assessment of the human remains was made by the Bureau of Land Management professional staff and University of Alaska Museum professional staff in consultation with representatives of the Native Village of Shaktoolik.

In 1945, human remains representing one individual were recovered without a federal permit from the vicinity of Shaktoolik, AK by Mr. Simon Newcomb. No known individual was identified. No associated funerary objects are present.

In 1949, human remains representing one individual were recovered from Nukleet site during legally authorized excavations. No known individual was identified. No associated funerary objects are present.

The current population of Shaktoolik appears to desend from earlier cultural groups who inhabited the general region for a thousand or more years before the present. The remains are believed to date within this time period. Oral history evidence presented during consultation with representatives of the Native Village of Shaktoolik indicate the Nukleet site is traditionally associated with the Village of Shaktoolik.

Based on the above mentioned information, officials of the Bureau of Land Management have determined that, pursuant to 43 CFR 10.2 (d)(1), the human remains listed above represent the physical remains of 2 individuals of Native American ancestry. Bureau of Land Managment officials have determined that, pursuant to 25 U.S.C. 3001 (2), there is a relationship of shared group identity which can be reasonably traced between these Native American human remains and associated funerary objects and the Native Village of Shaktoolik.

This notice has been sent to officials of the Native Village of Shaktoolik. Representatives of any other Indian tribe that believes itself to be culturally affiliated with these human remains and associated funerary objects should contact Dr. Robert E. King, Alaska State NAGPRA Coordinator, Bureau of Land Management, 222 W. 7th Avenue, #13, Anchorage, AK 99513–7599; telephone: (907) 271–5510, before November 4, 1996. Repatriation of the human remains to the Native Village of Shaktoolik may begin after that date if no additional claimants come forward.

Dated: September 30, 1996,

Francis P. McManamon,

Departmental Consulting Archeologist, Manager, Archeology and Ethnography Program.

[FR Doc. 96–25471 Filed 10–3–96; 8:45 am]

BILLING CODE 4310–70–F

Notice of Inventory Completion for Native American Human Remains and Associated Funerary Objects in the Possession of Fort Union Trading Post National Historic Site, Williston, ND

AGENCY: National Park Service, Interior

ACTION: Notice

Notice is hereby given in accordance with provisions of the Native American Graves Protection and Repatriation Act (NAGPRA), 25 U.S.C. 3003 (d), of the completion of an inventory of human remains and associated funerary objects in the possession of the National Park Service, Fort Union Trading Post National Historic Site, Williston, ND.

A detailed assessment of the human remains and associated funerary objects was made by National Park Service professional staff in consultation with representatives of the Assiniboine and Sioux Tribes of the Fort Peck Indian Reservation, Chippewa-Cree Indians of the Rocky Boy Reservation, Crow Tribe, Gros Ventre and Assiniboine Tribes of Montana, Standing Rock Sioux Tribe, Three Affiliated Tribes of the Fort Berthold Reservation, and Turtle Mountain Band of Chippewa Indians.

Between 1969 and 1986, human remains representing seven individuals were recovered from locations within the Fort Union Trading Post National Historic Site. One of the seven individuals was removed by a vandal in 1969. All bones except the skull were subsequently recovered by the FBI and returned to the National Park Service. No known individuals were identified. The associated funerary objects include 2,098 ceramic, glass, metal, shell, and stone beads; 58 leather clothing fragments; 27 lead balls; 21 fragments of textile; 18 buttons; 12 iron projectile points, 11 animal and fish bones; six copper bracelets; four earrings; four iron knives; four iron nails, hand wrought and machine cut; four pebbles; two belts, in pieces; two bottles, one whole and one fragment; two iron awls; two fragments of an iron gun worm; two window glass fragments; one iron auger; one English-style gunflint; one iron axe blade; one wood fragment; one worked antler and iron hide scraper; one iron rod; one pigment stone; one pigment sample in a dirt matrix; one piece of sheet copper; one leather moccasin fragment; one tin cup, in fragments; one key; one shell pendant; one rectangular tin box, in fragments; one glass tack; and one brass thimble. Associated funerary objects date the time of death of these individuals between 1867 and 1880.

Anthropometric data demonstrate a relationship between these remains and Siouan-speaking populations of the Northern Plains, including Assiniboine and Hidatsa. Letters from military officers living in the area in 1868 state that both Assiniboine tribal members and Hidatsa tribal members were permanent residents at the Fort Union site after the facility was abandoned as a trading post in 1867. Historical documents refer to the deaths of Assiniboine women and children from Sioux raids during this time period. Between 1870 and 1884, a Hidatsa band led by Crow-Flies-High resided a few hundred meters east of the Fort Union site. They suffered from Sioux raids as well. During consultation, representatives of the Assiniboine and Sioux Tribes of the Fort Peck Indian Reservation, Gros Ventre and Assiniboine Tribes of Montana, and Three Affiliated Tribes of the Fort Berthold Reservation stated their history indicates an affiliation with the human remains and associated funerary objects recovered from the Fort Union Trading Post site.

Based on the above-mentioned information, officials of the National Park Service have determined that, pursuant to 43 CFR 10.2 (d)(1), the human remains listed above represent the physical remains of seven individuals of Native American ancestry. Officials of the National Park Service have also determined that, pursuant to 25 U.S.C. 3001 (3)(A), the 2,293 objects listed above are reasonably believed to have been placed with or near individual human remains at the time of death or later as part of the death rite or ceremony. Lastly, officials of the National Park Service have determined that, pursuant to 25 U.S.C. 3001 (2), there is a relationship of shared group identity which can be reasonably traced between these Native American human remains and associated funerary objects and the Assiniboine and Sioux Tribes of the Fort Peck Indian Reservation, Gros Ventre and Assiniboine Tribes of Montana, and Three Affiliated Tribes of the Fort Berthold Reservation.

This notice has been sent to officials of the Assiniboine and Sioux Tribes of the Fort Peck Indian Reservation, Chippewa-Cree Indians of the Rocky Boy Reservation, Crow Tribe, Gros Ventre and Assiniboine Tribes of Montana, Standing Rock Sioux Tribe, Three Affiliated Tribes of the Fort Berthold Reservation, and Turtle Mountain Band of Chippewa Indians. Representatives of any other Indian tribe that believes itself to be culturally affiliated with these human remains and associated funerary objects should contact Paul Hedren, Superintendent, Fort Union Trading Post National Historic Site, R.R. 3, Box 71, Williston, ND 58801; telephone: (701) 572–9083 before November 4, 1996. Repatriation to the Assiniboine and Sioux Tribes of the Fort Peck Indian Reservation, Gros Ventre and Assiniboine Tribes of Montana, and Three Affiliated Tribes of the Fort Berthold Reservation may begin after that date if no additional claimants come forward.

Dated: September 30, 1996,

Francis P. McManamon,

Departmental Consulting Archeologist, Manager, Archeology and Ethnography Program.

[FR Doc. 96–25472 Filed 10–3–96; 8:45 am]

BILLING CODE 4310–70–F

Notice of Inventory Completion for Native American Human Remains from Hawaii in the Possession of the Fowler Museum of Cultural History, University of California-Los Angeles, CA

AGENCY: National Park Service, Interior.

ACTION: Notice.

Notice is hereby given in accordance with provisions of the Native American Graves Protection and Repatriation Act (NAGPRA), 25 U.S.C. 3003 (d), of the completion of an inventory of human remains from Hawaii in the possession of the Fowler Museum of Cultural History, University of California-Los Angeles, CA.

A detailed assessment of the human remains was made by the museum professional staff in consultation with representatives of *Hui Mālama I Nā Kūpuna 'O Hawai'I Nei.*

The human remains represent a minimum of seven individuals. No known individuals were identified. No associated funerary objects are present. One jaw bone is labeled ''L. Miller, Pre-Columbian Native.'' Naturalist Loye Miller is believed to have collected these human remains in 1901 and 1903 on the Hawaiian islands of Oahu—at Punahou Campus, the J.S. Castle Grounds, and Waikiki—and Kauai, at Kipukai. It is likely that these human remains came to UCLA along with non-human remains that are now part of Biology Department's the bird and mammal collection. In 1995, the human remains were transferred from the UCLA Department of Biology to the Archaeological Collections Facility of the Fowler Museum of Cultural History.

UCLA physical anthropologists have not been able to determine conclusively that these human remains are Native Hawaiian. However, representatives of *Hui Mālama I Nā Kūpuna 'O Hawai'i Nei* identified the sand dunes of Waikiki and Kipukai as traditional Hawaiian burial grounds. Representatives of *Hui Mālama I Nā Kūpuna 'O Hawai'i Nei* believe that the lack of associated funerary objects with the Punahou Campus and the J.S. Castle Grounds human remains is indicative of pre-contact Native Hawaiian burials.

Based on the above mentioned information, officials of the Fowler Museum of Cultural History have determined that, pursuant to 43 CFR 10.2 (d)(1), the human remains listed above represent the physical remains of seven individuals of Native American ancestry. Officials of the Fowler Museum of Cultural History have also determined that, pursuant to 25 U.S.C. 3001 (2), there is a relationship of shared group identity which can be reasonably traced between these Native American human remains and *Hui Mālama I Nā Kūpuna 'O Hawai'i Nei.*

This notice has been sent to officials of *Hui Mālama I Nā Kūpuna 'O Hawai'I Nei,* the Office of Hawaiian Affairs, the Oahu Burial Committee, and the Kauai/Nihau Island Burial Council. Representatives of any other Native Hawaiian organization that believes itself to be culturally affiliated with these human remains and should contact Harold Horowitz the NAGPRA Coordinator, Office of the Chancellor, UCLA, Los Angeles, CA 90095, telephone: (310) 825–3504, before November 4, 1996. Repatriation of the human remains to *Hui Mālama I Nā Kūpuna 'O Hawai'I Nei* may begin after that date if no additional claimants come forward.

Dated: September 30, 1996,

Francis P. McManamon,

Departmental Consulting Archeologist, Manager, Archeology and Ethnography Program.

[FR Doc. 96–25473 Filed 10–3–96; 8:45 am]

BILLING CODE 4310–70–F

Notice of Inventory Completion of Native American Human Remains from the Island of Maui in the Possession of the University Museum, University of Arkansas, Fayetteville, AR

AGENCY: National Park Service, Interior.

ACTION: Notice.

Notice is hereby given in accordance with provisions of the Native American Graves Protection and Repatriation Act, 25 U.S.C. 3003 (d), of the completion of the inventory of human remains from the Island of Maui in the possession of the University Museum, University of Arkansas, Fayetteville, AR.

A detailed inventory and assessment of these human remains has been made by museum staff and representatives of *Hui Mālama I Nā Kūpuna 'O Hawai'i Nei.*

The human remains consist of a skull without lower jaw (identified as ''probable male'') and a lower jaw (identified as ''probable female''). The museum purchased these human remains in 1951 from Ward's Natural Science supply company. An accompanying tag identifies the human remains as ''ancient'' Hawaiians found buried in sand above the high water mark on Waihee Beach, Maui Island. A representative of *Hui Mālama I Nā Kūpuna 'O Hawai'i Nei* has identified Waihe'e dune as a well known place for pre-contact Native Hawaiian burials. Inventory of the human remains and review of the accompanying documentation indicates that no known individuals are identifiable.

Based on the above information, officials of the University Museum have determined, pursuant to 43 CFR 10.2 (d)(1), that the human remains listed above represent the physical remains of

two individuals of Native American ancestry. Officials of museum have determined pursuant to 25 U.S.C. 3001 (2) that there is a relationship of shared group identity which can be reasonably traced between these remains and present-day members of *Hui Mālama I Nā Kūpuna 'O Hawai'i Nei*.

This notice has been sent to *Hui Mālama I Nā Kūpuna 'O Hawai'i Nei*, the Office of Hawaiian Affairs, and the Maui / Lana'i Island Burial Council. Representatives of any Native Hawaiian organization which believes itself to be culturally affiliated with these human remains should contact Dr. Michael P. Hoffman, University Museum, University of Arkansas, Fayetteville, AR 72701, telephone: (501) 575–3855, before November 4, 1996. Repatriation of the human remains to *Hui Mālama I Nā Kūpuna 'O Hawai'i Nei* may begin after that date if no additional claimants come forward.

Dated: September 30, 1996

Francis P. McManamon

Departmental Consulting Archeologist

Manager, Archeology and Ethnography Program

[FR Doc. 96–25474 Filed 10–3–96; 8:45 am]

BILLING CODE 4310–70–F

DEPARTMENT OF JUSTICE

Immigration and Naturalization Service

[INS No. 1781–96]

Notice of Intent To Prepare a Draft Environmental Impact Statement for the Construction of a Federal Service Processing Center in San Joaquin County, CA

AGENCY: Immigration and Naturalization Service, Justice.

ACTION: Notice of intent to prepare a Draft Environmental Impact Statement (DEIS).

SUMMARY:

Proposed Action

The Immigration and Naturalization Service (INS) has determined that an additional Service Processing Center (SPC) needs to be constructed to house approximately 350 alien detainees awaiting deportation or other actions pursuant to immigration regulations. Additionally, the site would be used for road access, housing, administrative programs, parking, and support facilities. The INS will evaluate proposed sites located in San Joaquin County, California, for the construction of this facility.

In the process of evaluating the tract of land, several aspects will receive detailed examination including utilities, traffic patterns, noise levels, visual intrusion, threatened and endangered species, cultural resources, and socio-economic impacts.

Alternatives

In developing the DEIS, the options of no action and alternative sites for the proposed facility will be fully and thoroughly examined.

Scoping Process

During the preparation of the DEIS, there will be numerous opportunities for public involvement in order to determine the issues to be examined. A scoping meeting will be held at a location convenient to the citizens of Tracy and a second scoping meeting will be held for the citizens of Stockton. The meeting will be publicized and held at a time which will make it possible for the public and interested agencies or organizations to attend. In addition, a number of informal meetings have already been held and will be continued by representatives of the Immigration and Naturalization Service with interested community leaders, officials, and citizens.

DEIS Preparation

Public notice will be given in the Federal Register concerning the availability of the DEIS for public review and comment.

FOR FURTHER INFORMATION CONTACT:

John W. Clarke, Director, Facilities and Space Management, Eastern Regional Office, Immigration and Naturalization Service, 70 Kimball Avenue, South Burlington, VT. 05403–6813, Telephone: 802–660–1154.

or

Richard Diefenbeck, Director, Facilities and Engineering Division, Immigration and Naturalization Service, Office of Administration, 425 I Street, NW., Washington, DC 20536, Room 2060, Telephone: 202–514–3099.

Dated: September 24, 1996.

Doris Meissner,

Commissioner, Immigration and Naturalization Service.

[FR Doc. 96–25485 Filed 10–3–96; 8:45 am]

BILLING CODE 4410–10–M

DEPARTMENT OF LABOR

Office of the Secretary

Submission for OMB Review; Comment Request

October 1, 1996.

The Department of Labor (DOL) has submitted the following public information collection requests (ICRs) to the Office of Management and Budget (OMB) for review and approval in accordance with the Paperwork Reduction Act of 1995 (Pub. L. 104–13, 44 U.S.C. Chapter 35). Copies of these individual ICRs, with applicable supporting documentation, may be obtained by calling the Department of Labor Acting Department Clearance Officer, Theresa M. O'Malley (202) 219–5095). Individuals who use a telecommunications device for the deaf (TTY/TDD) may call (202) 219–4720 between 1:00 p.m. and 4:00 p.m. Eastern time, Monday through Friday.

Comments should be sent to Office of Information and Regulatory Affairs, Attn: OMB Desk Officer for (BLS/DM/ESA/ETA/OAW/OAW/MSHA/OSHA/PWBA/VETS), Office of Management and Budget, Room 10235, Washington, DC 20503 (202) 395–7316), within 30 days from the date of this publication in the Federal Register.

The OMB is particularly interested in comments which:

* Evaluate whether the proposed collection of information is necessary for the proper performance of the functions of the agency, including whether the information will have practical utility;

* Evaluate the accuracy of the agency's estimate of the burden of the proposed collection of information, including the validity of the methodology and assumptions used;

* Enhance the quality, utility, and clarity of the information to be collected; and

* Minimize the burden of the collection of information on those who are to respond, including through the use of appropriate automated, electronic, mechanical, or other technological collection techniques or other forms of information technology, e.g., permitting electronic submission of responses.

Agency: Pension and Welfare Benefits Administration.

Title: ERISA Procedures 76–1, Advisory Opinion Procedure.

OMB Number: 1210–0066.

Agency Number: ERISA Procedures 76–1.

Frequency: On occasion.

Affected Public: Individuals or households; Business or other for-profit; Not-for-profit institutions.

Number of Respondents: 9

Estimated Time Per Respondent: 12⅔ hours.

Total Burden Hours: 114.

Total Annualized capital/startup costs: 0.

Total annual costs (operating/maintaining systems or purchasing services): $20,256.

Description: Under the Employee Retirement Income Security Act of 1974 (ERISA) 29 U.S.C. 1001 et seq., the Secretary of Labor has responsibility for administering, reporting, disclosure, fiduciary and other standards for pension and welfare plans. Part of the responsibility includes answering inquiries and requests for opinions from the affected public. ERISA Procedure 76–1 sets forth the administrative procedures for the public to use when requesting a legal interpretation (Advisory Opinion) from the Department.

Agency: Occupational Safety and Health Administration.

Title: Hazard Communication.

OMB Number: 1218–0072.

Frequency: Recordkeeping and third-party disclosure.

Affected Public: Business or other for-profit; Federal Government; State, Local or Tribal Government.

Program element	Requested burden hours
Written Hazard Communication Program (new establishments)	412,570
Written Hazard Communication Program (existing establishments)	1,085,710
Hazard determination	216,168
Sending MSDSs, existing establishments	538,290
Sending MSDSs, new establishments	552,286
Obtaining and maintaining MSDSs, existing establishments	2,016,768
Obtaining and maintaining MSDSs, new establishments	552,286
Labeling shipped containers	5,904,901
Labeling of in-plant containers	1,476,225
Access to trade secrets	201,447
Employee access	242,012
Total burden hours	13,198,753

Number of Respondents: 5,041,918.

Total Annual Responses: 74,579,540.

Estimated Time Per Respondent: .1769 hours.

Total Annualized capital/startup costs: 0.

Total annual costs (operating/maintaining systems or purchasing services): 0.

Description: The Standard (29 CFR 1910.1200; 1915, 1917, 1918, 1926, 1928) requires all employers to establish hazard communications programs to transmit information on the hazards of chemicals to their employees by means of container labels, material safety data sheets (MSDS), and training programs. This action will reduce the incidence of chemical related illness and injury in the workplace.

Agency: Bureau of Labor Statistics.

Title: Point of Purchase Survey.

OMB Number: 1220–0044.

Frequency: Quarterly.

Affected Public: Individuals or households.

Number of Respondents: 18,108.

Estimated Time Per Respondent: 12 minutes.

Total Burden Hours: 6,552.

Total Annualized capital/startup costs: 0.

Total annual costs (operating/maintaining systems or purchasing services): 0.

Description: The purpose of this collection is to develop and maintain a timely list of retail, wholesale, and service establishments at which people shop for specific consumer items. The information collected is used to select establishments for pricing market basket items as needed for the Consumer Price Index (CPI).

Agency: Bureau of Labor Statistics.

Title: Current Population Survey of Movers.

OMB Number: 1220–0new.

Frequency: Monthly.

Affected Public: Individuals or households.

Estimated Time Per Respondent: 2 minutes.

Total Burden Hours: 600.

Total Annualized capital/startup costs: 0.

Total annual costs (operating/maintaining systems or purchasing services): 0.

Description: The proposed movers survey will improve the ability of data users to understand and use gross flows data from the Current Population Survey (CPS).

Theresa M. O'Malley,

Acting Departmental Clearance Officer.

[FR Doc. 96–25507 Filed 10–3–96; 8:45am]

BILLING CODE 4510–24–M

Submission for OMB Review; Comment Request

September 26, 1996.

The Department of Labor (DOL) has submitted the following public information collection request (ICR) to the Office of Management and Budget (OMB) for review and approval in accordance with the Paperwork Reduction Act of 1995 (Pub. L. 104–13, 44 U.S.C. Chapter 35). A copy of this individual ICR, with applicable supporting documentation, may be obtained by calling the Department of Labor Acting Departmental Clearance Officer, Theresa M. O'Malley ((202) 219–5095). Individuals who use a telecommunications device for the deaf (TTY/TDD) may call (202) 219–4720 between 1:00 p.m. and 4:00 p.m. Eastern time, Monday through Friday.

Comments should be sent to Office of Information and Regulatory Affairs, Attn: OMB Desk Officer for the Office of Labor-Management Standards, Office of Management and Budget, Room 10235, Washington, DC 20503 ((202) 395–7316), within 30 days from the date of this publication in the Federal Register.

The OMB is particularly interested in comments which:

* Evaluate whether the proposed collection of information is necessary for the proper performance of the functions of the agency, including whether the information will have practical utility;

* Evaluate the accuracy of the agency's estimate of the burden of the proposed collection of information, including the validity of the methodology and assumptions used;

* Enhance the quality, utility, and clarity of the information to be collected; and

* Minimize the burden of the collection of information on those who are to respond, including through the use of appropriate automated, electronic, mechanical, or other technological collection techniques or other forms of information technology, e.g., permitting electronic submission of responses.

Agency: Office of Labor-Management Standards

Title: Labor Organization and Auxiliary Reports

OMB Number: 1214–0001

Agency Number: LM1, 2, 3, 4, 10, 15, 15A, 16, 20, 21, 30, S–1

Cite/reference	Total respondents	Frequency	Total responses	Average time per response	Burden
Form LM–1	330	Annually	330	55 minutes	302 hours.
Form LM–2	5,096	Annually	5,096	15.25 hours	77,714 hours.
Form LM–3	16,275	Annually	16,275	6.75 hours	109,857 hours.
Form LM–4	14,000	Annually	14,000	.86 hours	12,086 hours.
Form LM–10	177	Annually	177	35 minutes	104 hours.
Form LM–15	732	As Necessary	732	1.83 hours	1,342 hours.
Form LM–15A	61	Semi-Annually	61	22 minutes	22 hours.
Form LM–16	224	As Necessary	224	21 minutes	78 hours.
Form LM–20	168	As Necessary	168	22 minutes	61 hours.
Form LM–21	50	Annually	50	35 minutes	29 hours.
Form LM–30	78	Annually	78	35 minutes	46 hours.
Form S–1	200	Annually	200	35 minutes	117 hours.
Simplified Annual Report Format	3,298	Annually	3,298	12 minutes	671 hours.
Totals	40,689		40,689		202,429

Affected Public: Individuals or households; business or other for-profit; not-for-profit institutions.

Total Annualized capital/startup costs: 0.

Total annual costs (operating/maintaining systems or purchasing services): 0.

Description: The Labor-Management Reporting and Disclosure Act (LMRDA) requires unions to file annual financial reports, trusteeship reports, and copies of their Constitution and bylaws with the Department of Labor. Under certain circumstances reports are required of union officers and employees, employers, labor relations consultants, and surety companies. Files are required to retain supporting records for five years, unions are required to retain election records for one year.

Theresa M. O'Malley,

Acting Departmental Clearance Officer.

[FR Doc. 96–25508 Filed 10–3–96; 8:45 am]

BILLING CODE 4510–86–M

Employment and Training Administration

[TA–W–32,210, TA–W–32,210A]

Blue Mountain Forest Products, Pendelton, OR and Long Creek, OR; Amended Certification Regarding Eligibility To Apply for Worker Adjustment Assistance

In accordance with Section 223 of the Trade Act of 1974 (19 U.S.C. 2273) the Department of Labor issued a Notice of Certification Regarding Eligibility to Apply for Worker Adjustment Assistance on June 11, 1996, applicable to all workers of Blue Mountain Forest Products located in Pendelton, Oregon. The notice was published in the Federal Register on July 3, 1996 (61 FR 34875).

At the request of the State agency, the Department reviewed the worker certification. The workers produce lumber. New findings show that production, sales and employment data submitted by Blue Mountain Forest Products for the Pendelton location included the Long Creek, Oregon location. Worker separations have occurred at the Long Creek facility. Other new findings show that the impact date in the initial determination was set at April 15, 1995; the correct impact date is March 30, 1995.

The intent of the Department's certification is to include all workers of Blue Mountain Forest Products who were adversely affected by imports. Accordingly, the Department is amending the certification to include workers of the subject firm located in Long Creek, Oregon, and change the impact date to March 30, 1995.

The amended notice applicable to TA–W–32,210 is hereby issued as follows:

All workers of Blue Mountain Forest Products, Pendelton, Oregon (TA–W–32,210) and Long Creek, Oregon (TA–W–32,210A) who became totally or partially separated from employment on or after March 30, 1995 are eligible to apply for adjustment assistance under Section 223 of the Trade Act of 1974.

Signed at Washington, DC this 20th day of September 1996.

Curtis K. Kooser,

Acting Program Manager, Policy and Reemployment Services, Office of Trade Adjustment Assistance.

[FR Doc. 96–25512 Filed 10–3–96; 8:45 am]

BILLING CODE 4510–30–M

Investigations Regarding Certifications of Eligibility To Apply for Worker Adjustment Assistance

Petitions have been filed with the Secretary of Labor under Section 221(a) of the Trade Act of 1974 (''the Act'') and are identified in the Appendix to this notice. Upon receipt of these petitions, the Program Manager of the Office of Trade Adjustment Assistance, Employment and Training Administration, has instituted investigations pursuant to Section 221(a) of the Act.

The purpose of each of the investigations is to determine whether the workers are eligible to apply for adjustment assistance under Title II, Chapter 2, of the Act. The investigations will further relate, as appropriate, to the determination of the date on which total or partial separations began or threatened to begin and the subdivision of the firm involved.

The petitioners or any other persons showing a substantial interest in the subject matter of the investigations may request a public hearing, provided such request is filed in writing with the Program Manager, Office of Trade Adjustment Assistance, at the address shown below, not later than October 15, 1996.

Interested persons are invited to submit written comments regarding the subject matter of the investigations to the Program Manager, Office of Trade Adjustment Assistance, at the address shown below, not later than October 15, 1996.

The petitions filed in this case are available for inspection at the Office of the Program Manager, Office of Trade Adjustment Assistance, Employment and Training Administration, U.S. Department of Labor, 200 Constitution Avenue, N.W., Washington, D.C. 20210.

Signed at Washington, D.C. this 16th day of September, 1996.

Linda G. Poole,

Acting Program Manager, Policy & Reemployment Services, Office of Trade Adjustment Assistance.

APPENDIX

[Petitions instituted on 9/16/96]

TA–W	Subject firm (petitioners)	Location	Date of petition	Products(s)
32,738	Brandie Rose, Inc. (Wkrs)	McMinnville, TN	08/23/96	Ladies' Blouses
32,739	Mission Plastics (Wkrs)	DeQueen, AR	08/29/96	Mold Parts for Electric and Gas Timers.
32.740	Rano Cutting (UNITE)	New York, NY	08/27/96	Garment Cutting.
32,741	Jaywein Fashions, Inc (UNITE)	New York, NY	07/09/96	Apparel.
32,742	Joseph P. Conroy, Inc (UNITE)	Johnstown, NY	08/29/96	Gloves.
32,743	North American Coach, Inc (Co.)	Roswell, NM	07/31/96	Publication of Buss Repair Manuals.
32,744	UNIFI Spun Yarns, Inc (Wkrs)	Mt. Pleasant, NC	08/26/96	Cotton Blends and Various Other Spun Yarn.
32,745	The Jay Garment Co. (UNITE)	Clarksville, IN	08/30/96	Jeans—Ladies' and mens'.
32,746	Wolverine International (Co.)	Bay City, MI	08/29/96	Outerwear and Swimwear.
32,747	Lucent Technologies (Wkrs)	Little Rock, AR	08/13/96	Cellular Telephone.
32,748	Clintwood Garment Co (Wkrs)	Clintwood, VA	09/03/96	Boys' and Girls' Pants.
32,749	G H Bass (Wkrs)	Wilton, ME	08/29/96	Casual Shoes.
32,750	Ozark Quilt Supply (Wkrs)	Winona, MO	09/04/96	Quilts, Quilt Tops, Pillow Shams.
32,751	Detroit Gasket (UNITE)	Alcoa, TN	08/28/96	Auto/Van Headliners.
32,752	Rockland Pipeline Co. (Co.)	Houston, TX	09/04/96	Natural Gas and Gas Liquids.
32,753	JPS Converter and Indus. (Co.)	Greenville, SC	09/03/96	Woven Greige Fabric.
32,754	Bull HN Information (Co.)	Billerica, MA	09/10/96	Computers, Computer Boards, etc.

[FR Doc. 96–25513 Filed 10–3–96; 8:45 am]

BILLING CODE 4510–30–M

[TA–W–31,878, TA–W–31,878C]

Klear-Knit of Statesville, Inc., Statesville, NC and Klear-Knit, Inc., Florence, SC; Amended Certification Regarding Eligibility To Apply for Worker Adjustment Assistance

In accordance with Section 223 of the Trade Act of 1974 (19 U.S.C. 2273) the Department of Labor issued a Certification of Eligibility to Apply for Worker Adjustment Assistance on March 18, 1996, applicable to all workers of Klear-Knit of Statesville, Inc., Statesville, North Carolina. The certification was subsequently amended to include workers at other Klear-Knit locations. The notice was published in the Federal Register on September 6, 1996 (61 FR 47,181).

At the request of petitioners and the State agency, the Department reviewed the certification for workers of the subject firm. The workers produce knit garments. New findings show that the Klear-Knit, Inc. production facility in Florence, South Carolina was inadvertently excluded from the certification.

The intent of the Department's certification is to include all workers of Klear Knit, Inc. adversely affected by imports. Based on these new findings, the Department is amending the certification to include all workers of Klear-Knit, Inc. located in Florence, South Carolina.

The amended notice applicable to TA–W–31,878 is hereby issued as follows:

All workers of Klear-Knit of Statesville, Inc., Statesville, North Carolina (TA–W–31,878), and Klear-Knit, Inc., Florence, South Carolina (TA–W–31,878C) who became totally or partially separated from employment on or after January 19, 1995, are eligible to apply for adjustment assistance under Section 223 of the Trade Ace of 1974.

Signed at Washington, DC this 20th day of September 1996.

Curtis K. Kooser,

Acting Program Manager, Policy and Reemployment Services, Office of Trade Adjustment Assistance.

[FR Doc. 96–25511 Filed 10–3–96; 8:45 am]

BILLING CODE 4510–30–M

[TA–W–32,541]

Prentiss Manufacturing Company, Iuka, Mississippi; Notice of Revised Determination on Reconsideration

On August 16, 1996, the Department issued a Negative Determination Regarding Eligibility to Apply Worker Adjustment Assistance, applicable to all workers of Prentiss Manufacturing Company, located in Iuka, Mississippi. The notice was published in the Federal Register on September 13, 1996 (FR 61 48503).

Investigaton findings show that the workers produced men's workwear shirts. The workers were denied TAA because the ''contributed importantly'' test of the Group Eligibility Requirements of the Trade Act was not met. This test is generally determined through a survey of the workers' firm's major declining customers.

By letter postmarked August 27, 1996, the petitioners requested administrative reconsideration of the Department's findings.

Findings on reconsideration show that a major customer of the subject firm increased its purchases of imported men's workwear shirts in the relevant period.

Conclusion

After careful consideration of the new facts obtained on reconsideration, it is concluded that the workers of Prentiss Manufacturing Company of Iuka, Mississippi were adversely affected by increased imports of articles like or directly competitive with men's workwear shirts produced at the subject firm.

All workers of Prentiss Manufacturing Company of Iuka, Mississippi who became totally or partially separated from employment on or after June 26, 1996 are

eligible to apply for adjustment assistance under Section 223 of the Trade Act of 1974.

Signed at Washington, D.C. this 24th day of September 1996.

Linda G. Poole,

Acting Program Manager, Policy and Reemployment Services, Office of Trade Adjustment Assistance.

[FR Doc. 96–25510 Filed 10–3–96; 8:45 am]

BILLING CODE 4510–30–M

[TA–W–32,166]

Tifton Apparel Manufacturing Company aka Employee Support Services, Inc., Tifton, Georgia; Amended Certification Regarding Eligibility To Apply for Worker Adjustment Assistance

In accordance with section 223 of the Trade Act of 1974 (19 U.S.C. 2273) the Department of Labor issued a Certification of Eligibility to Apply for Worker Adjustment Assistance on June 6, 1996, applicable to all workers of Tifton Apparel Manufacturing Company located in Tifton, Georgia. The notice will soon be published in the Federal Register.

At the request of the State agency, the Department reviewed the certification for workers of the subject firm. New information provided by the State shows that the claimants' wages are reporter under the Unemployment Insurance (UI) tax account for Employee Support Services, Inc., a temporary agency located in Tampa, Florida.

The intent of the Department's certification is to include all workers of Tifton Apparel who were adversely affected by imports. Accordingly, the Department is amending the certification to include workers whose UI wages are reported to Employee Support Services, Inc., Tampa, Florida.

The amended notice applicable to TA–W–32,166 is hereby issued as follows:

All workers of Tifton Apparel Manufacturing Company, Tifton, Georgia who had wages reported under Employee Support Services, Inc., Tampa, Florida, who became totally or partially separated from employment on or after March 12, 1995, are eligible to apply for adjustment assistance under Section 223 of the Trade Act of 1974.

Signed at Washington, DC this 20th day of September 1996.

Curtis K. Kooser,

Acting Program Manager, Policy and Reemployment Services, Office of Trade Adjustment Assistance.

[FR Doc. 96–25509 Filed 10–3–96; 8:45 am]

BILLING CODE 4510–30–M

Employment Standards Administration Wage and Hour Division

Minimum Wages for Federal and Federally Assisted Construction; General Wage Determination Decisions

General wage determination decisions of the Secretary of Labor are issued in accordance with applicable law and are based on the information obtained by the Department of Labor from its study of local wage conditions and data made available from other sources. They specify the basic hourly wage rates and fringe benefits which are determined to be prevailing for the described classes of laborers and mechanics employed on construction projects of a similar character and in the localities specified therein.

The determinations in these decisions of prevailing rates and fringe benefits have been made in accordance with 29 CFR Part 1, by authority of the Secretary of Labor pursuant to the provisions of the Davis-Bacon Act of March 3, 1931, as amended (46 Stat. 1494, as amended, 40 U.S.C. 276a) and of other Federal statutes referred to in 29 CFR Part 1. Appendix, as well as such additional statutes as may from time to time be enacted containing provisions for the payment of wages determined to be prevailing by the Secretary of Labor in accordance with the Davis-Bacon Act. The prevailing rates and fringe benefits determined in these decisions shall, in accordance with the provisions of the foregoing statutes, constitute the minimum wages payable on Federal and federally assisted construction projects to laborers and mechanics of the specified classes engaged on contract work of the character and in the localities described therein.

Good cause is hereby found for not utilizing notice and public comment procedure thereon prior to the issuance of these determinations as prescribed in 5 U.S.C. 553 and not providing for delay in the effective date as prescribed in that section, because the necessity to issue current construction industry wage determinations frequently and in large volume causes procedures to be impractical and contrary to the public interest.

General wage determination decisions, and modifications and supersedeas decisions thereto, contain no expiration dates and are effective from their date of notice in the Federal Register, or on the date written notice is received by the agency, whichever is earlier. These decisions are to be used in accordance with the provisions of 29 CFR Parts 1 and 5. Accordingly, the applicable decision, together with any modifications issued, must be made a part of every contract for performance of the described work within the geographic area indicated as required by an applicable Federal prevailing wage law and 29 CFR Part 5. The wage rates and fringe benefits, notice of which is published herein, and which are contained in the Government Printing Office (GPO) document entitled ''General Wage Determinations Issued Under The Davis-Bacon and Related Acts,'' shall be the minimum paid by contractors and subcontractors to laborers and mechanics.

Any person, organization, or governmental agency having an interest in the rates determined as prevailing is encouraged to submit wage rate and fringe benefit information for consideration by the Department. Further information and self-explanatory forms for the purpose of submitting this data may be obtained by writing to the U.S. Department of Labor, Employment Standards Administration, Wage and Hour Division, Division of Wage Determinations, 200 Constitution Avenue, NW., Room S–3014, Washington, DC 20210.

Modifications to General Wage Determination Decisions

The number of decisions listed in the Government Printing Office document entitled ''General Wage Determinations Issued Under the Davis=Bacon and Related Acts'' being modified are listed by Volume and State. Dates of publication in the Federal Register are in parentheses following the decisions being modified.

Volume I

Massachusetts
- MA960001 (March 15, 1996)
- MA960002 (March 15, 1996)
- MA960017 (March 15, 1996)
- MA960018 (March 15, 1996)
- MA960019 (March 15, 1996)

Maine
- ME960007 (March 15, 1996)

New York
- NY960067 (March 15, 1996)

Puerto Rico
- PR960001 (March 15, 1996)
- PR960002 (March 15, 1996)
- PR960003 (March 15, 1996)

Vermont
- VT960004 (March 15, 1996)
- VT960005 (March 15, 1996)
- VT960006 (March 15, 1996)
- VT960009 (March 15, 1996)
- VT960014 (March 15, 1996)
- VT960015 (March 15, 1996)
- VT960016 (March 15, 1996)
- VT960017 (March 15, 1996)
- VT960018 (March 15, 1996)
- VT960019 (March 15, 1996)
- VT960020 (March 15, 1996)
- VT960021 (March 15, 1996)

VT960022 (March 15, 1996)
VT960023 (March 15, 1996)
VT960024 (March 15, 1996)

Volume II

District of Columbia
DC960001 (March 15, 1996)
DC960003 (March 15, 1996)
Maryland
MD960001 (March 15, 1996)
MD960002 (March 15, 1996)
MD960015 (March 15, 1996)
MD960021 (March 15, 1996)
MD960027 (March 15, 1996)
MD960031 (March 15, 1996)
MD960036 (March 15, 1996)
MD960042 (March 15, 1996)
MD960043 (March 15, 1996)
MD960048 (March 15, 1996)
MD960055 (March 15, 1996)
MD960056 (March 15, 1996)
MD960057 (March 15, 1996)
MD960058 (March 15, 1996)
Pennsylvania
PA960006 (March 15, 1996)
PA960038 (March 15, 1996)
PA960041 (March 15, 1996)
PA960047 (March 15, 1996)
PA960057 (March 15, 1996)
PA960061 (March 15, 1996)
Virginia
VA960025 (March 15, 1996)
VA960036 (March 15, 1996)
VA960038 (March 15, 1996)
VA960048 (March 15, 1996)
VA960051 (March 15, 1996)
VA960052 (March 15, 1996)
VA960058 (March 15, 1996)
VA960066 (March 15, 1996)
VA960078 (March 15, 1996)
VA960079 (March 15, 1996)
VA960089 (March 15, 1996)
VA960090 (March 15, 1996)
VA960091 (March 15, 1996)
VA960092 (March 15, 1996)
VA960094 (March 15, 1996)
VA960095 (March 15, 1996)
VA960096 (March 15, 1996)
VA960097 (March 15, 1996)
VA960098 (March 15, 1996)
VA960099 (March 15, 1996)
VA960101 (March 15, 1996)
VA960103 (March 15, 1996)
VA960104 (March 15, 1996)
VA960105 (March 15, 1996)
West Virginia
WV960012 (March 15, 1996)

Volume III

Alabama
AL960009 (March 15, 1996)
AL960010 (March 15, 1996)
AL960011 (March 15, 1996)
AL960012 (March 15, 1996)
AL960014 (March 15, 1996)
AL960015 (March 15, 1996)
AL960016 (March 15, 1996)
AL960019 (March 15, 1996)
AL960020 (March 15, 1996)
AL960021 (March 15, 1996)
AL960022 (March 15, 1996)
AL960027 (March 15, 1996)
AL960030 (March 15, 1996)
AL960038 (March 15, 1996)
AL960039 (March 15, 1996)
AL960040 (March 15, 1996)
AL960041 (March 15, 1996)
AL960042 (March 15, 1996)
AL960043 (March 15, 1996)
AL960044 (March 15, 1996)
AL960046 (March 15, 1996)
AL960049 (March 15, 1996)
AL960051 (March 15, 1996)
AL960052 (March 15, 1996)
AL960053 (March 15, 1996)
Florida
FL960001 (March 15, 1996)
FL960007 (March 15, 1996)
FL960009 (March 15, 1996)
FL960015 (March 15, 1996)
FL960018 (March 15, 1996)
FL960019 (March 15, 1996)
FL960020 (March 15, 1996)
FL960021 (March 15, 1996)
FL960022 (March 15, 1996)
FL960023 (March 15, 1996)
FL960024 (March 15, 1996)
FL960026 (March 15, 1996)
FL960029 (March 15, 1996)
FL960031 (March 15, 1996)
FL960041 (March 15, 1996)
FL960052 (March 15, 1996)
FL960056 (March 15, 1996)
FL960057 (March 15, 1996)
FL960058 (March 15, 1996)
FL960059 (March 15, 1996)
FL960060 (March 15, 1996)
FL960061 (March 15, 1996)
FL960062 (March 15, 1996)
FL960063 (March 15, 1996)
FL960064 (March 15, 1996)
FL960065 (March 15, 1996)
FL960068 (March 15, 1996)
FL960070 (March 15, 1996)
FL960071 (March 15, 1996)
FL960072 (March 15, 1996)
FL960073 (March 15, 1996)
FL960074 (March 15, 1996)
FL960075 (March 15, 1996)
FL960076 (March 15, 1996)
FL960079 (March 15, 1996)
FL960080 (March 15, 1996)
FL960082 (March 15, 1996)
FL960085 (March 15, 1996)
FL960086 (March 15, 1996)
FL960087 (March 15, 1996)
FL960088 (March 15, 1996)
FL960089 (March 15, 1996)
FL960091 (March 15, 1996)
FL960092 (March 15, 1996)
FL960094 (March 15, 1996)
FL960098 (March 15, 1996)
Georgia
GA960005 (March 15, 1996)
GA960006 (March 15, 1996)
GA960007 (March 15, 1996)
GA960008 (March 15, 1996)
GA960013 (March 15, 1996)
GA960014 (March 15, 1996)
GA960015 (March 15, 1996)
GA960016 (March 15, 1996)
GA960017 (March 15, 1996)
GA960019 (March 15, 1996)
GA960020 (March 15, 1996)
GA960021 (March 15, 1996)
GA960024 (March 15, 1996)
GA960031 (March 15, 1996)
GA960032 (March 15, 1996)
GA960036 (March 15, 1996)
GA960037 (March 15, 1996)
GA960038 (March 15, 1996)
GA960039 (March 15, 1996)
GA960041 (March 15, 1996)
GA960042 (March 15, 1996)
GA960045 (March 15, 1996)
GA960046 (March 15, 1996)
GA960047 (March 15, 1996)
GA960048 (March 15, 1996)
GA960049 (March 15, 1996)
GA960051 (March 15, 1996)
GA960052 (March 15, 1996)
GA960054 (March 15, 1996)
GA960055 (March 15, 1996)
GA960058 (March 15, 1996)
GA960060 (March 15, 1996)
GA960062 (March 15, 1996)
GA960063 (March 15, 1996)
GA960064 (March 15, 1996)
GA960067 (March 15, 1996)
GA960069 (March 15, 1996)
GA960070 (March 15, 1996)
GA960071 (March 15, 1996)
GA960072 (March 15, 1996)
GA960074 (March 15, 1996)
GA960075 (March 15, 1996)
GA960076 (March 15, 1996)
GA960078 (March 15, 1996)
GA960082 (March 15, 1996)
Kentucky
KY960009 (March 15, 1996)
KY960012 (March 15, 1996)
KY960016 (March 15, 1996)
KY960017 (March 15, 1996)
KY960018 (March 15, 1996)
KY960020 (March 15, 1996)
KY960023 (March 15, 1996)
KY960024 (March 15, 1996)
KY960025 (March 15, 1996)
KY960026 (March 15, 1996)
KY960027 (March 15, 1996)
KY960029 (March 15, 1996)
KY960035 (March 15, 1996)
KY960036 (March 15, 1996)
KY960037 (March 15, 1996)
KY960038 (March 15, 1996)
KY960040 (March 15, 1996)
KY960041 (March 15, 1996)
KY960042 (March 15, 1996)
KY960043 (March 15, 1996)
KY960045 (March 15, 1996)
KY960048 (March 15, 1996)
KY960049 (March 15, 1996)
KY960052 (March 15, 1996)
KY960053 (March 15, 1996)
KY960055 (March 15, 1996)
Mississippi
MS960013 (March 15, 1996)
MS960014 (March 15, 1996)
MS960015 (March 15, 1996)
MS960016 (March 15, 1996)
MS960017 (March 15, 1996)
MS960018 (March 15, 1996)
MS960019 (March 15, 1996)
MS960020 (March 15, 1996)
MS960021 (March 15, 1996)
MS960022 (March 15, 1996)
MS960023 (March 15, 1996)
MS960028 (March 15, 1996)
MS960030 (March 15, 1996)
MS960031 (March 15, 1996)
MS960033 (March 15, 1996)
MS960034 (March 15, 1996)
MS960035 (March 15, 1996)
MS960036 (March 15, 1996)
MS960037 (March 15, 1996)
MS960038 (March 15, 1996)
MS960039 (March 15, 1996)
MS960040 (March 15, 1996)

MS960041 (March 15, 1996)
MS960043 (March 15, 1996)
MS960044 (March 15, 1996)
MS960045 (March 15, 1996)
MS960046 (March 15, 1996)
MS960047 (March 15, 1996)
MS960048 (March 15, 1996)
MS960049 (March 15, 1996)
MS960050 (March 15, 1996)
MS960052 (March 15, 1996)

North Carolina
NC960002 (March 15, 1996)
NC960004 (March 15, 1996)
NC960005 (March 15, 1996)
NC960006 (March 15, 1996)
NC960007 (March 15, 1996)
NC960009 (March 15, 1996)
NC960013 (March 15, 1996)
NC960014 (March 15, 1996)
NC960015 (March 15, 1996)
NC960016 (March 15, 1996)
NC960017 (March 15, 1996)
NC960018 (March 15, 1996)
NC960020 (March 15, 1996)
NC960021 (March 15, 1996)
NC960022 (March 15, 1996)
NC960023 (March 15, 1996)
NC960024 (March 15, 1996)
NC960025 (March 15, 1996)
NC960026 (March 15, 1996)
NC960027 (March 15, 1996)
NC960028 (March 15, 1996)
NC960029 (March 15, 1996)
NC960030 (March 15, 1996)
NC960031 (March 15, 1996)
NC960037 (March 15, 1996)
NC960038 (March 15, 1996)
NC960039 (March 15, 1996)
NC960040 (March 15, 1996)
NC960043 (March 15, 1996)
NC960044 (March 15, 1996)
NC960045 (March 15, 1996)
NC960046 (March 15, 1996)
NC960047 (March 15, 1996)
NC960048 (March 15, 1996)
NC960049 (March 15, 1996)

South Carolina
SC960002 (March 15, 1996)
SC960004 (March 15, 1996)
SC960006 (March 15, 1996)
SC960007 (March 15, 1996)
SC960008 (March 15, 1996)
SC960009 (March 15, 1996)
SC960010 (March 15, 1996)
SC960011 (March 15, 1996)
SC960012 (March 15, 1996)
SC960013 (March 15, 1996)
SC960014 (March 15, 1996)
SC960015 (March 15, 1996)
SC960016 (March 15, 1996)
SC960017 (March 15, 1996)
SC960018 (March 15, 1996)
SC960019 (March 15, 1996)
SC960021 (March 15, 1996)
SC960022 (March 15, 1996)
SC960024 (March 15, 1996)
SC960030 (March 15, 1996)

Tennessee
TN960006 (March 15, 1996)
TN960007 (March 15, 1996)
TN960008 (March 15, 1996)
TN960009 (March 15, 1996)
TN960010 (March 15, 1996)
TN960011 (March 15, 1996)
TN960013 (March 15, 1996)
TN960015 (March 15, 1996)
TN960021 (March 15, 1996)
TN960029 (March 15, 1996)
TN960030 (March 15, 1996)
TN960031 (March 15, 1996)
TN960032 (March 15, 1996)
TN960033 (March 15, 1996)
TN960047 (March 15, 1996)
TN960055 (March 15, 1996)
TN960056 (March 15, 1996)

Volume IV

Illinois
IL960011 (March 15, 1996)

Indiana
IN960001 (May 17, 1996)
IN960003 (March 15, 1996)
IN960008 (March 15, 1996)
IN960009 (March 15, 1996)
IN960017 (March 15, 1996)
IN960020 (March 15, 1996)
IN960028 (March 15, 1996)
IN960031 (March 15, 1996)
IN960035 (March 15, 1996)
IN960041 (March 15, 1996)
IN960042 (March 15, 1996)
IN960045 (March 15, 1996)
IN960048 (March 15, 1996)
IN960052 (March 15, 1996)
IN960055 (March 15, 1996)
IN960060 (March 15, 1996)

Michigan
MI960013 (March 15, 1996)
MI960014 (March 15, 1996)
MI960035 (March 15, 1996)
MI960037 (March 15, 1996)
MI960038 (March 15, 1996)
MI960043 (March 15, 1996)
MI960048 (March 15, 1996)
MI960056 (March 15, 1996)
MI960057 (March 15, 1996)
MI960061 (March 15, 1996)

Minnesota
MN960007 (March 15, 1996)
MN960008 (March 15, 1996)
MN960027 (March 15, 1996)
MN960032 (March 15, 1996)
MN960041 (March 15, 1996)
MN960059 (March 15, 1996)
MN960061 (March 15, 1996)

Ohio
OH960002 (March 15, 1996)
OH960003 (March 15, 1996)
OH960008 (March 15, 1996)
OH960016 (March 15, 1996)
OH960029 (March 15, 1996)
OH960031 (March 15, 1996)

Wisconsin
WI960058 (March 15, 1996)
WI960064 (March 15, 1996)

Volume V

Arkansas
AR960006 (March 15, 1996)
AR960007 (March 15, 1996)
AR960009 (March 15, 1996)
AR960018 (March 15, 1996)
AR960030 (March 15, 1996)
AR960031 (March 15, 1996)
AR960032 (March 15, 1996)
AR960033 (March 15, 1996)
AR960034 (March 15, 1996)
AR960035 (March 15, 1996)
AR960036 (March 15, 1996)
AR960037 (March 15, 1996)
AR960038 (March 15, 1996)
AR960039 (March 15, 1996)
AR960040 (March 15, 1996)
AR960041 (March 15, 1996)
AR960042 (March 15, 1996)
AR960043 (March 15, 1996)
AR960044 (March 15, 1996)
AR960045 (March 15, 1996)

Iowa
IA960006 (March 15, 1996)
IA960030 (March 15, 1996)
IA960042 (March 15, 1996)
IA960052 (March 15, 1996)
IA960055 (March 15, 1996)
IA960061 (March 15, 1996)
IA960063 (March 15, 1996)
IA960064 (March 15, 1996)
IA960076 (March 15, 1996)

Kansas
KS960001 (March 15, 1996)
KS960013 (March 15, 1996)
KS960017 (March 15, 1996)
KS960039 (March 15, 1996)
KS960040 (March 15, 1996)
KS960042 (March 15, 1996)
KS960046 (March 15, 1996)
KS960049 (March 15, 1996)
KS960050 (March 15, 1996)
KS960052 (March 15, 1996)
KS960053 (March 15, 1996)
KS960054 (March 15, 1996)

Louisiana
LA960001 (March 15, 1996)
LA960004 (March 15, 1996)
LA960005 (March 15, 1996)
LA960007 (March 15, 1996)
LA960009 (March 15, 1996)
LA960012 (March 15, 1996)
LA960015 (March 15, 1996)
LA960016 (March 15, 1996)
LA960018 (March 15, 1996)
LA960021 (March 15, 1996)
LA960027 (March 15, 1996)
LA960028 (March 15, 1996)
LA960031 (March 15, 1996)
LA960040 (March 15, 1996)
LA960041 (March 15, 1996)
LA960049 (March 15, 1996)
LA960051 (March 15, 1996)
LA960053 (March 15, 1996)
LA960054 (March 15, 1996)
LA960056 (March 15, 1996)
LA960057 (March 15, 1996)
LA960059 (March 15, 1996)

Missouri
MO960001 (March 15, 1996)
MO960002 (March 15, 1996)
MO960004 (March 15, 1996)
MO960006 (March 15, 1996)
MO960007 (March 15, 1996)
MO960008 (March 15, 1996)
MO960011 (March 15, 1996)
MO960013 (March 15, 1996)
MO960014 (March 15, 1996)
MO960015 (March 15, 1996)
MO960016 (March 15, 1996)
MO960017 (March 15, 1996)
MO960019 (March 15, 1996)
MO960023 (March 15, 1996)
MO960028 (March 15, 1996)
MO960029 (March 15, 1996)
MO960034 (March 15, 1996)
MO960035 (March 15, 1996)
MO960036 (March 15, 1996)
MO960038 (March 15, 1996)
MO960041 (March 15, 1996)
MO960042 (March 15, 1996)
MO960043 (March 15, 1996)

MO960047 (March 15, 1996)
MO960048 (March 15, 1996)
MO960049 (March 15, 1996)
MO960050 (March 15, 1996)
MO960051 (March 15, 1996)
MO960052 (March 15, 1996)
MO960054 (March 15, 1996)
MO960055 (March 15, 1996)
MO960057 (March 15, 1996)
MO960058 (March 15, 1996)
MO960059 (March 15, 1996)
MO960060 (March 15, 1996)
MO960062 (March 15, 1996)
MO960063 (March 15, 1996)
MO960065 (March 15, 1996)
MO960067 (March 15, 1996)
MO960068 (March 15, 1996)
MO960072 (March 15, 1996)

Nebraska
NE960001 (March 15, 1996)
NE960003 (March 15, 1996)
NE960009 (March 15, 1996)
NE960011 (March 15, 1996)
NE960017 (March 15, 1996)
NE960018 (March 15, 1996)
NE960021 (March 15, 1996)
NE960022 (March 15, 1996)
NE960027 (March 15, 1996)
NE960028 (March 15, 1996)
NE960033 (March 15, 1996)
NE960034 (March 15, 1996)
NE960035 (March 15, 1996)
NE960041 (March 15, 1996)
NE960042 (March 15, 1996)
NE960043 (March 15, 1996)
NE960059 (March 15, 1996)

New Mexico
NM960001 (March 15, 1996)
NM960005 (March 15, 1996)

Oklahoma
OK960003 (March 15, 1996)
OK960007 (March 15, 1996)
OK960008 (March 15, 1996)
OK960009 (March 15, 1996)
OK960010 (March 15, 1996)
OK960011 (March 15, 1996)
OK960019 (March 15, 1996)
OK960020 (March 15, 1996)
OK960022 (March 15, 1996)

Texas
TX960002 (March 15, 1996)
TX960006 (March 15, 1996)
TX960013 (March 15, 1996)
TX960020 (March 15, 1996)
TX960021 (March 15, 1996)
TX960022 (March 15, 1996)
TX960024 (March 15, 1996)
TX960029 (March 15, 1996)
TX960031 (March 15, 1996)
TX960036 (March 15, 1996)
TX960040 (March 15, 1996)
TX960041 (March 15, 1996)
TX960042 (March 15, 1996)
TX960044 (March 15, 1996)
TX960049 (March 15, 1996)
TX960050 (March 15, 1996)
TX960052 (March 15, 1996)
TX960065 (March 15, 1996)
TX960066 (March 15, 1996)
TX960071 (March 15, 1996)
TX960074 (March 15, 1996)
TX960078 (March 15, 1996)
TX960079 (March 15, 1996)
TX960084 (March 15, 1996)
TX960087 (March 15, 1996)
TX960091 (March 15, 1996)
TX960094 (March 15, 1996)
TX960096 (March 15, 1996)
TX960097 (March 15, 1996)
TX960098 (March 15, 1996)
TX960099 (March 15, 1996)
TX960103 (March 15, 1996)
TX960107 (March 15, 1996)
TX960113 (March 15, 1996)
TX960116 (March 15, 1996)

Volume VI

Alaska
AK960001 (March 15, 1996)

Arizona
AZ960020 (March 15, 1996)

California
CA960022 (March 15, 1996)
CA960093 (March 15, 1996)

Colorado
CO960001 (March 15, 1996)
CO960003 (March 15, 1996)
CO960005 (March 15, 1996)
CO960010 (March 15, 1996)
CO960011 (March 15, 1996)
CO960013 (March 15, 1996)
CO960014 (March 15, 1996)
CO960015 (March 15, 1996)
CO960017 (March 15, 1996)
CO960019 (March 15, 1996)
CO960025 (March 15, 1996)
CO960026 (March 15, 1996)
CO960027 (March 15, 1996)
CO960028 (March 15, 1996)
CO960029 (March 15, 1996)
CO960030 (March 15, 1996)
CO960031 (March 15, 1996)
CO960033 (March 15, 1996)
CO960034 (March 15, 1996)

Hawaii
HI960001 (March 15, 1996)

Montana
MT960001 (March 15, 1996)
MT960003 (March 15, 1996)
MT960004 (March 15, 1996)
MT960005 (March 15, 1996)
MT960006 (March 15, 1996)
MT960007 (March 15, 1996)
MT960008 (March 15, 1996)
MT960027 (March 15, 1996)

North Dakota
ND960009 (March 15, 1996)
ND960010 (March 15, 1996)
ND960023 (March 15, 1996)
ND960031 (March 15, 1996)
ND960033 (March 15, 1996)
ND960036 (March 15, 1996)
ND960037 (March 15, 1996)
ND960038 (March 15, 1996)
ND960039 (March 15, 1996)
ND960040 (March 15, 1996)
ND960042 (March 15, 1996)
ND960043 (March 15, 1996)
ND960045 (March 15, 1996)
ND960046 (March 15, 1996)
ND960047 (March 15, 1996)
ND960048 (March 15, 1996)

South Dakota
SD960007 (March 15, 1996)
SD960011 (March 15, 1996)
SD960012 (March 15, 1996)
SD960020 (March 15, 1996)
SD960025 (March 15, 1996)
SD960027 (March 15, 1996)
SD960028 (March 15, 1996)
SD960029 (March 15, 1996)
SD960031 (March 15, 1996)
SD960032 (March 15, 1996)
SD960033 (March 15, 1996)
SD960034 (March 15, 1996)
SD960035 (March 15, 1996)
SD960036 (March 15, 1996)
SD960038 (March 15, 1996)
SD960039 (March 15, 1996)
SD960040 (March 15, 1996)
SD960042 (March 15, 1996)
SD960043 (March 15, 1996)

Utah
UT960018 (March 15, 1996)
UT960019 (March 15, 1996)

Wyoming
WY960014 (March 15, 1996)

General Wage Determination Publication

General wage determinations issued under the Davis-Bacon and related Acts, including those noted above, may be found in the Government Printing Office (GPO) document entitled ''General Wage Determinations Issued Under The Davis-Bacon and Related Acts''. This publication is available at each of the 50 Regional Government Depository Libraries and many of the 1,400 Government Depository Libraries across the county.

The general wage determinations issued under the Davis-Bacon and related Acts are available electronically by subscription to the FedWorld Bulletin Board System of the National Technical Information Service (NTIS) of the U.S. Department of Commerce at (703) 487–4630.

Hard-copy subscriptions may be purchased from: Superintendent of Documents, U.S. Government Printing Office, Washington, DC 20402, (202) 512–1800.

When ordering hard-copy subscription(s), be sure to specify the State(s) of interest, since subscriptions may be ordered for any or all of the six separate volumes, arranged by State. Subscriptions include an annual edition (issued in January or February) which includes all current general wage determinations for the States covered by each volume. Throughout the remainder of the year, regular weekly updates are distributed to subscribers.

Signed at Washington, DC this 27th day of September 1996.

Philip J. Gloss,

Chief, Branch of Construction Wage Determinations.

[FR Doc. 96–25199 Filed 10–3–96; 8:45 am]

BILLING CODE 4510–27–M

INTERNATIONAL BOUNDARY AND WATER COMMISSION

Notice of Public Meeting

AGENCY: Border Environment Cooperation Commission (BECC).

SUMMARY: This notice announces the 10th public meeting of the BECC Board of Directors, Saturday, November 9, 1996, from 9:00 am–3:30 pm, at the La Posada Hotel, located at 1000 Zaragosa St., in Laredo, Texas.

FOR FURTHER INFORMATION CONTACT: M.R. Ybarra, Secretary, United States Section, International Boundary and Water Commission, telephone: (915) 534–6698; or Tracy Williams, Public Outreach Coordinator, Border Environment Cooperation Commission, P.O. Box 221648, El Paso, Texas 79913, telephone: (011–52–16) 29–23–95; fax: (011–52–16) 29–23–97; e-mail: becc@cocef.interjuarez.com.

SUPPLEMENTARY INFORMATION: The U.S. Section, International Boundary and Water Commission, on behalf of the Border Environment Cooperation Commission (BECC), cordially invites the public to attend the 10th Public Meeting of the Board of Directors on Saturday, November 9, 1996, from 9:00 am–3:30 pm, at the La Posada Hotel, located at 1000 Zaragosa St., in Laredo, Texas.

Proposed Agenda

9:00 am—Opening of Public Meeting
—Approval of Minutes (Action Item)
—Approval of Proposed Agenda (Action Item)

Welcoming Remarks

—Mayors of Laredo and Nuevo Laredo

Managers Report

—Project Development Assistance Program
—Status of Certified Projects
—Rules of Procedure (Action Item)
—Schedule for Board Meetings in 1997 (Action Item)

Presentation of Proposed Criteria Revision

—Public Comment
—Approval of Criteria Revisions by Board (Action Item)

Presentation of Projects for Certification

—Public Comment on each project
—Consideration of Project Certification by Board (Action Item)

General Public Comments

3:30 pm—Adjourn

Summaries of the projects to be considered for certification are available on BECC's Home Page: http://cocef.interjuarez.com. Anyone interested in submitting written comments to the Board of Directors on the project, or any other agenda item, should send them to the BECC 15 days prior to the public meeting. Anyone interested in making a brief statement to the Board may do so during the public meeting.

Dated: September 26, 1996.

M.R. Ybarra,

Secretary, U.S. IBWC.

[FR Doc. 96–25406 Filed 10–3–96; 8:45 am]

BILLING CODE 4710–03–M

NUCLEAR REGULATORY COMMISSION

Documents Containing Reporting or Recordkeeping Requirements; Office of Management and Budget (OMB) Review

AGENCY: Nuclear Regulatory Commission (NRC).

ACTION: Notice of the OMB review of information collection.

SUMMARY: The Nuclear Regulatory Commission has recently submitted to OMB for review the following proposal for a reduction of information collection requirements under the provisions of the Paperwork Reduction Act of 1995 (44 U.S.C. Chapter 35).

1. Type of submission: Revision.
2. The title of the information collection: Proposed amendments to 10 CFR Parts 20, 32, 35, 36, and 39, ''Minor Corrections, Clarifying Changes, and a Minor Policy Change.''
3. The form number if applicable: Not Applicable.
4. How often the collection is required: On occasion.
5. Who will be required or asked to report: NRC licensees.
6. An estimate of the number of responses: 250.
7. The estimated number of annual respondents: Approximately 100 NRC reactor licensees and 150 NRC materials licensees would be effected by this proposed reduction of information collection requirements.
8. An estimate of the total number of hours needed annually to complete the requirement or request: Reduction of 250.
9. Section 3507(d), Pub. L. 104–13, applies to this action.
10. Abstract: The Commission is proposing to reduce the existing information collection requirements by revising the following sections of 10 CFR Part 20:

—10 CFR 20.1906(d)-Licensees would be required to notify only the NRC Operations Center when radiation levels exceed regulatory limits upon receiving and opening packages, rather than the 3-tiered reporting of such incidents that is currently required.

—10 CFR 20.2202(d)(2)-All NRC licensees, not just power reactor licensees, would be permitted to submit incident reports only to the NRC Operations Center and only by telephone. Currently, this section requires that power reactor licensees submit reports to the NRC Operations Center, but all other licensees are required to submit both a telephone report to the NRC Operations Center and a telegram, mailgram, or facsimile to the Regional Office.

Submit, by November 4, 1996 comments that address the following questions:

1. Is the proposed collection of information necessary for the NRC to properly perform its functions? Does the information have practical utility?
2. Is the burden estimate accurate?
3. Is there a way to enhance the quality, utility, and clarity of the information to be collected?
4. How can the burden of the collection of information be minimized, including the use of automated collection techniques or other forms of information technology?

A copy of the submittal may be viewed free of charge at the NRC Public Document Room, 2120 L Street NW. (lower level), Washington, DC. The proposed rule is or has been published in the Federal Register within several days of the publication date of this Federal Register Notice. Instructions for accessing the electronic OMB clearance package for the rulemaking have been appended to the electronic rulemaking. Members of the public may access the electronic OMB clearance package by following the directions for electronic access provided in the preamble to the titled rulemaking.

Comments and questions should be directed to the OMB reviewer by November 4, 1996. Edward Michlovich, Office of Information and Regulatory Affairs, (3150–0014), NEOB–10202, Office of Management and Budget, Washington, DC 20503.

Comments can also be submitted by telephone at (202) 395–3084.

The NRC Clearance Officer is Brenda Jo. Shelton, (301) 415–7233.

Dated at Rockville, Maryland, this 25th day of September, 1996.

For the Nuclear Regulatory Commission.

Gerald F. Cranford,

Designated Senior Official for Information Resources Management.

[FR Doc. 96–25487 Filed 10–3–96; 8:45 am]

BILLING CODE 7590–01–P

Assurance of Equipment Operability and Containment Integrity During Design-Basis Accident Conditions; Issued

AGENCY: Nuclear Regulatory Commission.

ACTION: Notice of issuance.

SUMMARY: The Nuclear Regulatory Commission (NRC) has issued Generic Letter 96–06 to notify all licensees of nuclear power reactors about several safety-significant issues that have been identified as a result of recent NRC inspection activities, licensee notifications, and event reports, and that warrant action by the NRC to assure that they have been adequately addressed and resolved; these issues include:

(1) Cooling water systems serving the containment air coolers may be exposed to the hydrodynamic effects of waterhammer during either a loss-of-coolant accident (LOCA) or a main steamline break (MSLB). These cooling water systems were not designed to withstand the hydrodynamic effects of waterhammer and corrective actions may be needed to satisfy system design and operability requirements.

(2) Cooling water systems serving the containment air coolers may experience two-phase flow conditions during postulated LOCA and MSLB scenarios. The heat removal assumptions for design-basis accident scenarios were based on single-phase flow conditions. Corrective actions may be needed to satisfy system design and operability requirements.

(3) Thermally induced overpressurization of isolated water-filled piping sections in containment could jeopardize the ability of accident-mitigating systems to perform their safety functions, and could also lead to a breach of containment integrity via bypass leakage. Corrective actions may be needed to satisfy system operability requirements.

This generic letter requests that licensees determine the susceptibility of their facility containment air cooler cooling water systems to either waterhammer or two-phase flow conditions during postulated accident conditions, determine the susceptibility of piping systems that penetrate the containment to thermal expansion of fluid and overpressurization, and assess the operability of affected systems and take corrective action, as appropriate to satisfy system design and operability requirements. Licensees are also required to submit a written response. This generic letter is available in the NRC Public Document Room under accession number 9609250096.

DATES: The generic letter was issued on September 30, 1996.

ADDRESSEES: Not applicable.

FOR FURTHER INFORMATION CONTACT: James E. Tatum at (301) 415–2805.

SUPPLEMENTARY INFORMATION: The actions requested in this generic letter are considered compliance backfits under the provisions of 10 CFR 50.109 and existing NRC procedures to ensure that containment integrity is maintained, that safety-related components and piping systems are capable of performing their intended safety functions and satisfying their licensing-basis code criteria, respectively, and that containment integrity and safety-related piping systems and components are not adversely affected by the occurrence of waterhammer, two-phase flow, or thermal overpressurization that may occur in safety-related and non-safety-related systems that penetrate containment.

Dated at Rockville, Maryland, this 30th day of September, 1996.

For the Nuclear Regulatory Commission.

Brian K. Grimes.

Acting Director, Division of Reactor Program Management, Office of Nuclear Reactor Regulation.

[FR Doc. 96–25488 Filed 10–3–96; 8:45 am]

BILLING CODE 7590–01–P

POSTAL SERVICE

Privacy Act of 1974, System of Records

AGENCY: Postal Service.

ACTION: Notice of revisions and addition of new routine uses applicable to two existing systems of records and deletion of one system of records by incorporation into them.

SUMMARY: This document publishes notice of modifications to three Postal Service systems of records. The systems are similar in character in that they contain records relating to indemnity claims filed and inquiries made by customers using certain domestic and international postal services such as insured, collect on delivery (COD), registered, Express Mail, and ordinary mail. The modifications: (1) Delete one system of records by including those records in two other systems covering records kept for the same purpose; (2) add routine uses to the remaining two systems of records; (3) amend one of those systems to reflect the maintenance of COD claim and inquiry records; and (4) make clarifying editorial changes, such as organization name changes. The routine uses allow the Postal Service to discuss, as necessary, a claim with the sender or addressee of a mailpiece, with an expert consultant, and, in the case of an international claim, with an authority from a foreign postal administration. This notice complies with subsection (e)(11) of the Privacy Act (5 U.S.C. 552a), which require agencies to publish advance notice of any new use of information in a system of records.

DATES: This proposal will become effective without further notice on November 13, 1996 unless comments received on or before that date result in a contrary determination.

ADDRESSES: Written comments on this proposal should be mailed or delivered to Payroll Accounting/Records, United States Postal Service, 475 L'Enfant Plaza SW, Room 8650, Washington, DC 20260–5243. Copies of all written comments will be available at the above address for public inspection and photocopying between 8 a.m. and 4:45 p.m., Monday through Friday.

FOR FURTHER INFORMATION CONTACT: Dolores M. Gentry, (202) 268–3212.

SUPPLEMENTARY INFORMATION: Privacy Act system of records USPS 160.030, Special Mail Services-Express Mail Service Insurance Claims for Loss, Delay and Damage, was established for the primary purpose of serving as a source of information for the adjudication of Express Mail insurance claims whenever such claims are filed by customers. Records contained within this system are similar in nature and kept for the same purpose as those contained in Privacy Act systems of records USPS 160.010, Special Mail Services-Insured and Registered Domestic Mail Inquiry and Application for Indemnity Records, and in USPS 160.020, Special Mail Services-Insured and Registered Ordinary international Mail Inquiry and Application for Indemnity Records. This notice proposes elimination of system of records USPS 160.030 by incorporating the domestic Express Mail and international Express Mail insurance claims and inquiry records into USPS 160.010 and USPS 160.020, respectively.

Privacy Act system of records USPS 160.010 is being modified to reflect the maintenance of COD claims and inquiry records. COD is a service used by mailers to mail an article for which they have not paid, and have the price of the article and the cost of the postage collected by the Postal Service from the recipient. In addition, two new routine uses are proposed for both USPS 160.010 and USPS 160.020. Routine use

No. 1 allows the Postal Service to disclose information to the sender or addressee of the mailpiece for which a claim has been filed in connection with resolution of a claim. Routine use No. 2 allows the Postal Service to disclose information to an expert consultant for the purpose of determining the value of lost or damaged items or to otherwise determine the validity of a claim. Both of these disclosures may be necessary to process a claim or respond to an inquiry.

Other modifications to USPS 160.010 and USPS 160.020 do not alter the character or use of information contained in the systems, but rather improve the system descriptions to reflect the types of special mail services offered, correct a typographical error that appeared in an earlier system publication, and update the system manager's title as a result of an agency restructuring. With these modifications, the system description of each system of records will better inform the public of the circumstances under which the Postal Service may be maintaining information about them. In view of these factors, the Postal Service has determined that these changes reflect matters of internal practice and procedure that will not substantially affect the rights or obligations of private parties.

Pursuant to 5 U.S.C. 552a(e)(11), interested persons are invited to submit written data, views, or arguments on this proposal. A report of the proposed revisions to the systems has been sent to Congress and to the Office of Management and Budget for their evaluation.

USPS Privacy Act systems 160.010 and 160.020 were last published in their entirety in the Federal Register on October 26, 1989 (54 FR 43705 and 43706). The Postal Service proposes amending these systems as shown below.

USPS 160.010

SYSTEM NAME:

[CHANGE TO READ] ''Special Mail Services-Domestic Insured, Registered, Collect on Delivery (COD), and Express Mail Claim and Inquiry Records.''

SYSTEM LOCATIONS:

[CHANGE TO READ] ''Consumer Advocate, Headquarters; Accounting Service Center (ASC), St. Louis, MO; and post offices.''

CATEGORIES OF INDIVIDUALS COVERED BY THE SYSTEM:

[CHANGE TO READ] ''Domestic insured, registered, COD, and Express Mail claimants/requesters, including mail senders and addressees.''

CATEGORIES OF RECORDS IN THE SYSTEM:

[CHANGE TO READ] ''Names and addresses of mail sender and addressee, declaration of claimant/requester, and claim/inquiry status information.''

AUTHORITY FOR MAINTENANCE OF THE SYSTEM:

39 U.S.C. 401, 404.

PURPOSE(S):

[CHANGE TO READ] ''To adjudicate claims related to domestic insured, registered, COD, and Express Mail, and to respond to inquiries concerning those claims.''

ROUTINE USES OF RECORDS MAINTAINED IN THE SYSTEM, INCLUDING CATEGORIES OF USERS AND THE PURPOSES OF SUCH USES:

[CHANGE TO READ] ''General routine use statements a, b, c, d, e, f, g, h, j, and m listed in the prefatory statement at the beginning of the Postal Service's published system notices apply to this system. Other routine uses are as follows:

1. Information from this system may be disclosed to the sender or addressee of the mailpiece for which a claim has been filed in connection with resolution of the claim.

2. Information from this system may be disclosed to an expert consultant for the purpose of determining the value of lost or damaged items or to determine otherwise the validity of a claim.''

POLICIES AND PRACTICES FOR STORING, RETRIEVING, ACCESSING, RETAINING, AND DISPOSING OF RECORDS IN THE SYSTEM:

STORAGE:

Handwritten and typed forms and computer-readable media and printouts.

RETRIEVABILITY:

[CHANGE TO READ] ''Mailer's name; date of mailing; and insured, registered, COD, or Express Mail article number; or claim number.''

SAFEGUARDS:

[CHANGE TO READ] ''Handwritten and typed forms are stored in steel file cabinets, with access limited to authorized personnel. Computer-readable media are stored in protected areas, with access limited to authorized personnel.''

RETENTION AND DISPOSAL:

[CHANGE TO READ]

''a. Automated claims and inquiry system records. Delete from system after 2 years.

b. Insured, registered, COD, and Express Mail claim and inquiry records (post office). Destroy 2 years from date of cutoff.

c. Insured, registered, COD, and Express Mail claim and inquiry records (ASC). Destroy 4 years from date of cutoff.''

SYSTEM MANAGER(S) AND ADDRESS:

[CHANGE TO READ]

''VICE PRESIDENT AND CONSUMER ADVOCATE, UNITED STATES POSTAL SERVICE, 475 L'ENFANT PLZ SW, WASHINGTON DC 20260–2200''

NOTIFICATION PROCEDURE:

[CHANGE TO READ] ''Individuals wishing to know whether information about them is maintained in this system of records should address inquiries to the head of the facility where the domestic insured, registered, COD, or Express Mail claim was filed. If a claim has been filed, the inquiry should include claim number; date of claim; insured, registered, COD, or Express Mail number of article mailed; and date of mailing.''

RECORD ACCESS PROCEDURE:

[CHANGE TO READ] ''Requests for access must be made in accordance with the Notification Procedure above and the Postal Service Privacy Act regulations regarding access to records and verification of identity under 39 CFR 266.6.''

CONTESTING RECORD PROCEDURES:

See Notification and Record Access Procedures above.

RECORD SOURCE CATEGORIES:

Information from the individual completing the claim/inquiry form.

USPS 160.020

SYSTEM NAME:

[CHANGE TO READ] ''Special Mail Services-International Ordinary, Insured, Registered, and Express Mail Inquiry and Application for Indemnity Records, 160.020.''

SYSTEM LOCATION:

[CHANGE TO READ] ''Consumer Advocate, Headquarters; Accounting Service Center (ASC), St. Louis, MO; and international claims and inquiries offices in New York, New Orleans, and San Francisco.''

CATEGORIES OF INDIVIDUALS COVERED BY THE SYSTEM:

[CHANGE TO READ] ''International insured, registered, and Express Mail claimants/requesters, including mail senders and addresses, and ordinary mail inquirers.''

CATEGORIES OF RECORDS IN THE SYSTEM:

[CHANGE TO READ] ''Names and addresses of mail sender and addressee,

declaration of claimant/requester, and claim/inquiry status information.''

AUTHORITY FOR MAINTENANCE OF THE SYSTEM:

39 U.S.C. 401, 404.

PURPOSE(S):

[CHANGE TO READ] ''To adjudicate claims related to international insured mail, registered mail, Express Mail, and ordinary mail, and to respond to inquiries concerning those claims.''

ROUTINE USES OF RECORDS MAINTAINED IN THE SYSTEM, INCLUDING CATEGORIES OF USERS AND PURPOSES OF SUCH USES:

[CHANGE TO READ] ''General routine use statements a, b, c, d, e, f, g, h, j, and m listed in the prefatory statement at the beginning of the Postal Service's published system notices apply to this system. Other routine uses are as follows:

1. Information from this system may be disclosed to the sender or addressee of the mailpiece for which a claim has been filed when required for resolution of the claim.

2. Information from this system may be disclosed to an expert consultant for the purpose of determining the value of lost or damaged items or to determine otherwise the validity of a claim.''

3. Information from this system may be disclosed to an authority of a foreign postal administration when required for resolution of an international mail inquiry.

POLICIES AND PRACTICES FOR STORING, RETRIEVING, ACCESSING, RETAINING, AND DISPOSING OF RECORDS IN THE SYSTEM:

STORAGE:

Handwritten and typed forms and computer-readable media and printouts.

RETRIEVABILITY:

[CHANGE TO READ] ''Claimant's/requester's name; case number; registered; insured, or Express Mail article number; date of mailing; and country of destination.''

SAFEGUARDS:

[CHANGE TO READ] ''Handwritten and typed forms are stored in steel file cabinets, with access limited to authorized personnel. Computer-readable media are stored in protected areas, and access to the media is limited to authorized personnel.''

RETENTION AND DISPOSAL:

[CHANGE TO READ] ''Destroy 3 years from date of cutoff.''

SYSTEM MANAGER(S) AND ADDRESS:

[CHANGE TO READ]

''VICE PRESIDENT AND CONSUMER ADVOCATE, UNITED STATES POSTAL SERVICE, 475 L'ENFANT PLZ SW, WASHINGTON, DC 20260–2200''

NOTIFICATION PROCEDURE:

[CHANGE TO READ] ''Individuals wishing to know whether information about them is maintained in this system of records should address inquiries to the head of the facility where the international insured, registered, or Express Mail claim was filed or the ordinary mail inquiry was made. If a claim has been filed, the inquiry should include claim number; date of claim; insured, registered, or Express Mail number of article mailed; date of mailing; and destination country.''

RECORD ACCESS PROCEDURE:

[CHANGE TO READ] ''Requests for access must be made in accordance with the Notification Procedure above and the Postal Service Privacy Act regulations regarding access to records and verification of identity under 39 CFR 266.6.''

CONTESTING RECORD PROCEDURES:

See Notification and Record Access Procedures above.

RECORD SOURCE CATEGORIES:

[CHANGE TO READ] ''Information from the individual completing the claim/inquiry form.''

USPS 160.030

SYSTEM NAME

Special Mail Services—Express Mail Service Insurance Claims for Loss, Delay and Damage, 160.030.

Because records maintained under USPS 160.030 are similar in nature to those maintained under USPS 160.010 and 160.020, they are being incorporated into these two systems. Therefore, this system of records is being eliminated.

Stanley F. Mires,

Chief Counsel, Legislative.

[FR Doc. 96–25082 Filed 10–3–96; 8:45 am]

BILLING CODE 7710–12–M

SECURITIES AND EXCHANGE COMMISSION

[Release No. 35–26582]

Filings Under the Public Utility Holding Company Act of 1935, as Amended (''Act'')

September 27, 1996.

Notice is hereby given that the following filing(s) has/have been made with the Commission pursuant to provisions of the Act and rules promulgated thereunder. All interested persons are referred to the application(s) and/or declaration(s) for complete statements of the proposed transaction(s) summarized below. The application(s) and/or declaration(s) and any amendments thereto is/are available for public inspection through the Commission's Office of Public Reference.

Interested persons wishing to comment or request a hearing on the application(s) and/or declaration(s) should submit their views in writing by October 21, 1996, to the Secretary, Securities and Exchange Commission, Washington, D.C. 20549, and serve a copy on the relevant applicant(s) and/or declarant(s) at the address(es) specified below. Proof of service (by affidavit or, in case of an attorney at law, by certificate) should be filed with the request. Any request for hearing shall identify specifically the issues of fact or law that are disputed. A person who so requests will be notified of any hearing, if ordered, and will receive a copy of any notice or order issued in the matter. After said date, the application(s) and/or declaration(s), as filed or as amended, may be granted and/or declaration(s), as filed or as amended, may be granted and/or permitted to become effective.

GPU International, Inc., et al. (70–8533)

GPU International, Inc. (''GPUI'') (formerly Energy Initiatives, Inc.) and NCP Energy, Inc. (''NCP''), each of One Upper Pond Road, Parsippany, New Jersey 07054, and each a nonutility subsidiary of General Public Utilities Corporation (''GPU''), a registered holding company, have filed a declaration under section 12(c) of the Act and rules 46 and 54 thereunder.

By order dated May 17, 1994 (HCAR No. 26053), among other things, GPUI was authorized to acquire all of the stock of North Canadian Power Inc. (now known an NCP), a company engaged exclusively in the business of owning or leasing and operating qualifying cogeneration facilities (''QFs''), as defined in the Public Utility Regulatory Policies Act of 1978, as amended, and developing other QFs and exempt wholesale generators (''EWGs''), as defined in section 32 of the Act.

By order dated March 1, 1995 (HCAR No. 26241), NCP was authorized to distribute to GPUI, by way of a dividend, all of NCP's assets, except for certain assets related to its Syracuse Cogeneration Project. The NCP assets consisted of all of the outstanding common stock (''Common Stock'') of each subsidiary of NCP (each a ''Project Sub'').

By order dated January 3, 1996 (HCAR No. 26447), the Commission extended

until June 30, 1996, the period during which NCP was authorized to pay the dividend.

On March 27, 1996, NCP distributed to GPUI, by way of a dividend, the capital stock of its Project Subs other than those that hold NCP's interest in the Pasco Cogeneration Project, namely, NCP Pasco Incorporated and NCP Dade Power Incorporated (the ''Pasco Project Subs''). NCP was unable to pay the dividend with respect to the Pasco Project Subs because it had not yet received certain third-party consents which are required under its project agreements as a condition to effecting the transfer. NCP now anticipates that these consents will be received by December 31, 1996, and NCP requests authorization to declare the dividend with respect to the Pasco Project Subs at any time and from time to time on or before December 31, 1996.

For the Commission, by the Division of Investment Management, pursuant to delegated authority.

Margaret H. McFarland,

Deputy Secretary.

[FR Doc. 96–25506 Filed 10–3–96; 8:45 am]

BILLING CODE 8010–01–M

[Release No. 34–37717; File No. SR–NASD–96–33]

Self-Regulatory Organizations; Notice of Filing and Immediate Effectiveness of Proposed Rule Change by National Association of Securities Dealers, Inc. Relating to Small Order Execution System Tier Size Classifications

September 24, 1996.

Pursuant to Section 19(b)(1) of the Securities Exchange Act of 1934 (''Act''), 15 U.S.C. 78s(b)(1), notice is hereby given that on September 11, 1996, the National Association of Securities Dealers, Inc. (''NASD'' or ''Association'') filed with the Securities and Exchange Commission (''SEC'' or ''Commission'') the proposed rule change as described in Items I, II, and III below, which Items have been prepared by the NASD. The NASD has designated this proposal as a stated policy practice and procedure with respect to the administration and enforcement of NASD rules under section 19(b)(3)(A)(i) of the Act, which renders the rule effective upon the Commission's receipt of this filing. The Commission is publishing this notice to solicit comments on the proposed rule change from interested persons.

I. Self-Regulatory Organization's Statement of the Terms of Substance of the Proposed Rule Change

The NASD is submitting this filing to effectuate The Nasdaq Stock Market, Inc.'s (''Nasdaq'') periodic reclassification of Nasdaq National Market (''NNM'') securities into appropriate tier sizes for purposes of determining the maximum size order for a particular security eligible for execution through Nasdaq's Small Order Execution System (''SOES'') and the minimum quote size requirements for Nasdaq market makers in NNM securities.[1] Specifically, under the proposal, 591 NNM securities will be reclassified into a different SOES tier size effective October 1, 1996. Because the proposed rule change is an interpretation of existing NASD rules, there are no language changes.

II. Self-Regulatory Organization's Statement of the Purpose of, and Statutory Basis for, the Proposed Rule Change

In its filing with the Commission, the NASD included statements concerning the purpose of and basis for the proposed rule change and discussed any comments it received on the proposed rule change. The text of these statements may be examined at the places specified in Item IV below. The NASD has prepared summaries, set forth in Sections (A), (B), and (C) below, of the most significant aspects of such statements.

(A) Self-Regulatory Organization's Statement of the Purpose of, and Statutory Basis for, the Proposed Rule Change

The purpose of the rule change is to effectuate Nasdaq's periodic reclassification of NNM securities into appropriate tier sizes for purposes of determining the maximum size order for a particular security eligible for execution through SOES and the minimum quote size requirements for Nasdaq market makers in NNM securities. Nasdaq periodically reviews the SOES tier size applicable to each NNM security to determine if the trading characteristics of the issue have changed so as to warrant a tier size adjustment. Such a review was conducted using date as of June 28, 1996, pursuant to the following established criteria.[2]

NNM securities with an average daily non-block volume of 3,000 shares or more a day, a bid price less than or equal to $100, and three or more market makers are subject to a minimum quotation size requirement of 1,000 shares and a maximum SOES order size of 1,000 shares;

NNM securities with an average daily non-block volume of 1,000 shares or more a day, a bid price less than or equal to $150, and two or more market makers are subject to a minimum quotation size requirement of 500 shares and a maximum SOES order size of 500 shares; and

NNM securities with an average daily non-block volume of less than 1,000 shares a day, a bid price less than or equal to $250, and less than two market makers are subject to a minimum quotation size requirement of 200 shares and a maximum SOES order size of 200 shares.

Pursuant to the application of this classification criteria, 591 NNM securities will be reclassified effective October 1, 1996. These 591 NNM securities are set out in the NASD's Notice To Members 96–62 (September 1996).

In ranking NNM securities pursuant to the established classification criteria, Nasdaq followed the changes dictated by the criteria with three exceptions. First, an issue was not moved more than one tier size level. For example, if an issue was previously categorized in the 1,000-share tier size, it would not be permitted to move to the 200-share tier even if the reclassification criteria showed that such a move was warranted. In adopting this policy, Nasdaq was attempting to maintain adequate public investor access to the market for issues in which the tier size level decreased and help ensure the ongoing participation of market makers in SOES for issues in which the tier size level increased. Second, for securities priced below $1.00 where the reranking called for a reduction in tier size, the tier size was not reduced. Third, for the top 50 Nasdaq securities based on market capitalization, the SOES tier sizes were not reduced regardless of whether the reranking called for a tier-size reduction.

The NASD believes that the proposed rule change is consistent with Section 15A(b)(6) of the Act. Section 15A(b)(6) requires, among other things, that the rules of the NASD governing the operation of The Nasdaq Stock Market be designed to foster cooperation and coordination with persons engaged in regulating, clearing, settling, processing information with respect to, and

[1] In 1988, the Commission approved a proposed rule change to establish maximum SOES order size tiers for all NNM securities, and the periodic reexamination and reclassification of NNM securities within those tier sizes. See Securities Exchange Act Release No. 25791 (June 9, 1988), 53 FR 22594 (June 16, 1988) (''SOES Tier Size Order'').

[2] The classification criteria are set forth in NASD Rule 4613(a)(2) and the footnote to NASD Rule 4710(g).

facilitating transactions in securities, and to remove impediments to and perfect the mechanism of a free and open market. The NASD believes that the reassignment of NNM securities within SOES tier size levels and minimum quotation size levels will further these ends by providing an efficient mechanism for small, retail investors to execute their orders on Nasdaq and by providing investors with the assurance that they can effect trades up to a certain size at the best prices quoted on Nasdaq.

(B) Self-Regulatory Organization's Statement on Burden on Competition

The NASD does not believe that the proposed rule change will result in any burden on competition that is not necessary or appropriate in furtherance of the purposes of the Act, as amended.

(C) Self-Regulatory Organization's Statement on Comments on the Proposed Rule Change Received From Members, participants, or Others

Written comments were neither solicited nor received.

III. Date of Effectiveness of the Proposed Rule Change and Timing for Commission Action

The foregoing rule change has become effective upon filing pursuant to Section 19(b)(3)(A)(i) of the Act and Section (e) of Rule 19b–4 promulgated thereunder because the reranking of NNM securities into appropriate SOES tier sizes was done pursuant to the NASD's stated policy and practice with respect to the administration and enforcement of two existing NASD rules. Further, in the SOES Tier Size Order, the Commission requested that the NASD provide this information as an interpretation of an existing NASD rule under Section 19(b)(3)(A) of the Act.

At any time within 60 days of the filing of a rule change pursuant to Section 19(b)(3)(A) of the Act, the Commission may summarily abrogate the rule change if it appears to the Commission that such action is necessary or appropriate in the public interest, for the protection of investors, or otherwise in furtherance of the purposes of the Act.

IV. Solicitation of Comments

Interested persons are invited to submit written data, views, and arguments concerning the foregoing. Persons making written submissions should file six copies thereof with the Secretary, Securities and Exchange Commission, 450 Fifth Street, N.W., Washington, D.C. 20549. Copies of the submission, all subsequent amendments, all written statements with respect to the proposed rule change that are filed with the Commission, and all written communications relating to the proposed rule change between the Commission and any person, other than those that may be withheld from the public in accordance with the provisions of 5 U.S.C. 552, will be available for inspection and copying in the Commission's Public Reference Room. Copies of such filing will also be available for inspection and copying at the principal office of the NASD. All submissions should refer to SR–NASD–96–33 and should be submitted by October 25, 1996.

For the Commission, by the Division of Market Regulation, pursuant to delegated authority, 17 CFR 200.30–3(a)(12).

Margaret H. McFarland,

Deputy Secretary.

[FR Doc. 96–25504 Filed 10–3–96; 8:45 am]

BILLING CODE 8010–01–M

[Release No. 34–37753; File No. SR–NSCC–96–14]

Self-Regulatory Organizations; National Securities Clearing Corporation; Order Granting Approval of a Proposed Rule Change Relating to the Use of Letters of Credit as Clearing Fund Collateral

September 30, 1996.

On July 25, 1996, the National Securities Clearing Corporation (''NSCC'') filed a proposed rule change (File No. SR–NSCC–96–14) with the Securities and Exchange Commission (''Commission'') pursuant to Section 19(b) of the Securities Exchange Act of 1934 (''Act'').[1] Notice of the proposal was published in the Federal Register on August 26, 1996, to solicit comments from interested persons.[2] No comments were received. As discussed below, this order approves the proposed rule change.

I. Description

With this order, the Commission is granting full approval to NSCC's rule filing concerning participants' use of letters of credit as clearing fund collateral. Previously, the Commission granted temporary approval to the proposed rule change.[3] Specifically, the rule change increases the minimum cash contribution for any member that uses letters of credit to collateralize its clearing fund required deposit from $50,000 to the greater of $50,000 or 10% of that member's required clearing fund deposit up to a maximum of $1,000,000. In addition, the rule change provides that only 70% of a member's required clearing fund deposit may be collateralized with letters of credit. The rule change also adds headings to the clearing fund formula section for clarity and made other nonsubstantive drafting changes.

II. Discussion

Section 17A(b)(3)(F) of the Act requires that a clearing agency's rules be designed to ensure the safeguarding of securities and funds in its custody or control or for which it is responsible and to protect investors and the public interest.[4] The Commission believes NSCC's proposal to increase the minimum cash contribution for those participants using letters of credit to collateralize their clearing fund obligations should make NSCC's clearing fund more liquid which should enable NSCC to meet its obligation to safeguard securities and funds and to protect the interests of investors and of the public.

Although letters of credit are useful means of funding clearing agency guarantee deposits, their unrestricted use may present risks to clearing agencies. Because letters of credit reflect the issuer's promise to pay funds upon presentation of stipulated documents by the holder, a clearing agency holding letters of credit will be exposed to risk should the issuer refuse to honor its promise to pay. Furthermore, because under the Uniform Commercial Code the issuer may defer honoring a payment request until the close of business on the third banking day following receipt of the required documents, a clearing agency making a payment request may have to either await payment or seek alternative short-term financing. This waiting period could reduce a clearing agency's liquidity and thereby could hinder its ability to meet its payment obligations on a timely basis.[5]

---

[1] 15 U.S.C. 78s(b) (1988).

[2] Securities Exchange Act Release No. 37582 (August 19, 1996), 61 FR 43800.

[3] The proposed rule change was originally filed on October 27, 1989, and on January 31, 1990, was approved temporarily through December 31, 1990. Securities Exchange Act Release No. 27664 (January 31, 1990), 55 FR 4297 [File No. SR–NSCC–89–16]. Subsequently, the Commission granted a number of extensions to the temporary approval to allow the Commission and the NSCC sufficient time to review and to assess the use of letters of credit as clearing fund collateral. Most recently, the Commission extended temporary approval through September 30, 1996. Securities Exchange Act Release No. 36360 (October 11, 1995), 60 FR 53945 [File No. SR–NSCC–95–12.]

[4] 15 U.S.C. 78q–1(b)(3)(F) (1988).

[5] To compensate for risks such as issuer defaults and delays in honoring letters of credit, NSCC

Continued

While the Commission is approving NSCC's filing, the Commission continues to believe that it is prudent for clearing agencies that accept letters of credit as clearing fund contributions to limit their exposures by imposing concentration limits on the use of letters of credit to prevent any one issuer's letters of credit from constituting too large a percentage of their total required clearing fund contributions. Therefore, the Commission urges NSCC to review its clearing fund policies and procedures for the acceptance of letters of credit with respect to concentration limits.

III. Conclusion

On the basis of the foregoing, the Commission finds that the proposal is consistent with the requirements of the Act and particularly with Section 17A(b)(3)(F) of the Act and the rules and regulations thereunder.

It is therefore ordered, pursuant to Section 19(b)(2) of the Act, [6] that the proposed rule change (File No. SR–NSCC–96–14) be and hereby is approved.

For the Commission by the Division of Market Regulation, pursuant to delegated authority.[7]

Margaret H. McFarland,

Deputy Secretary.

[FR Doc. 96–25505 Filed 10–3–96; 8:45 am]

BILLING CODE 8010–01–M

currently has a $4,000,000 line of credit that can be sued for liquidity purposes. Under the terms of NSCC's line of credit the letters of credit in the NSCC clearing fund may be used as collateral.

[6] 15 U.S.C. 78s(b)(2) (1988)

[7] 17 CFR 200.30(a)(12) (1996).

SMALL BUSINESS ADMINISTRATION

Notice of Action Subject to Intergovernmental Review

The SBA is notifying the public that it intends to grant the pending applications of 35 existing SBDCs for refunding. A short description of the SBDC program follows.

The SBA is publishing this notice 90 days before the expected refunding date. The SBDCs and their mailing addresses are listed below. A copy of this notice also is being furnished to the respective State single points of contact designated under the Executive Order.

Each SBDC application must be consistent with any area-wide small business assistance plan adopted by a State-authorized agency. A State single point of contact and other interested State or local entities may submit written comments regarding an SBDC refunding within 30 days from the date of publication of this notice to the SBDC and to Johnnie L. Albertson, Associate Administrator for SBDCs, U.S. Small Business Administration, 409 Third Street, S.W., Suite 4600, Washington, D.C. 20416.

Description of the SBDC Program

A partnership exists between SBA and an SBDC. SBDCs offer training, counseling and other business development assistance to small businesses. Each SBDC provides services under a negotiated Cooperative Agreement with SBA, the general management and oversight of SBA, and a state plan initially approved by the Governor. Non-Federal funds must match Federal funds. An SBDC must operate according to law, the Cooperative Agreement, SBA's regulations, the annual Program Announcement, and program guidance.

Program Objectives

The SBDC program uses Federal funds to leverage the resources of states, academic institutions and the private sector to:

(a) Strengthen the small business community;

(b) Increase economic growth;

(c) Assist more small businesses; and

(d) Broaden the delivery system to more small businesses.

SBDC Program Organization

The lead SBDC operates a statewide or regional network of SBDC subcenters. An SBDC must have a full-time Director. SBDCs must use at least 80 percent of the Federal funds to provide services to small businesses. SBDCs use volunteers and other low cost resources as much as possible.

SBDC Services

An SBDC must have a full range of business development and technical assistance services in its area of operations, depending upon local needs, SBA priorities and SBDC program objectives. Services include training and counseling to existing and prospective small business owners in management, marketing, finance, operations, planning, taxes, and any other general or technical area of assistance that supports small business growth.

The SBA district office and the SBDC must agree upon the specific mix of services. They should give particular attention to SBA's priority and special emphasis groups, including veterans, women, exporters, the disabled, and minorities.

SBDC Program Requirements

An SBDC must meet programmatic and financial requirements imposed by statute, regulations or its Cooperative Agreement. The SBDC must:

(a) Locate subcenters so that they are as accessible as possible to small businesses;

(b) Open all subcenters at least 40 hours per week, or during the normal business hours of its state or academic Host Organization, throughout the year;

(c) Develop working relationships with financial institutions, the investment community, professional associations, private consultants and small business groups; and

(d) Maintain lists of private consultants at each subcenter.

Dated: September 27, 1996.

Johnnie L. Albertson,

Associate Administrator for Small Business Development Centers.

Addresses of Relevant SBDC State Directors

Mr. Michael York, State Director, Maricopa Community College, 2411 West 14th Street, Tempe, AZ 85281–6941, (602) 731–8202.

Ms. Denise Arend, Acting State Director, California Trade & Comm. Agency, 801 K Street, Suite 1700, Sacramento, CA 95814, (916) 324–5068.

Mr. Woodrow McCutchen, Director, Howard University, 2600 6th St., N.W., Room 125, Washington, D.C. 20059, (202) 806–1550.

Mr. Hank Logan, State Director, University of Georgia, Chicopee Complex, Athens, GA 30602, (706) 542–6762.

Mr. Sam Males, State Director, University of Nevada/Reno, College of Business Admin., Room 411, Reno, NV 89557–0100, (702) 784–1717.

Mr. Steve Thrash, State Director, Economic Development Council, One North Capitol, Suite 420, Indianapolis, IN 46204, (317) 264–6871.

Mr. Charles Davis, State Director, University of Southern Maine, 96 Falmouth Street, Portland, ME 04103, (207) 780–4420.

Mr. Barry Bartlett, Acting State Director, Salt Lake Community College, 8811 South 700 East, Sandy, UT 84070, (801) 255–5878.

Ms. Kathryn Wallace, State Director, Office of Business Development, 1625 Broadway, Suite 1710, Denver, CO 80202, (303) 892–3809.

Mr. Jerry Cartwright, State Director, University of West Florida, 19 West Garden Street, Pensacola, FL 32501, (904) 444–2060.

Mr. Darryl Mleynek, State Director, University of Hawaii/Hilo, 200 West

Kawili Street, Hilo, HI 96720, (808) 933–3515.

Mr. Jeffrey Mitchell, State Director, Department of Commerce and Community Affairs, 620 East Adams Street, Springfield, IL 62701, (217) 524–5856.

Ms. Elizabeth Lamoureux, State Director, University of New Hampshire, 108 McConnell Hall, Durham, NH 03824, (603) 862–2200.

Mr. Ronald Hall, State Director, Small Business Dev. Center, 2727 Second Avenue, Detroit, MI 48201, (313) 964–1798.

Mr. Scott Daugherty, State Director, University of North Carolina, 333 Fayetteville Street Mall, Suite 1150, Raleigh, NC 27514, (919) 715–7272.

Dr. Grady Pennington, State Director, SE Oklahoma State University, 517 West University, Durant, OK 74701, (405) 924–0277.

Mr. Greg Higgins, State Director, University of Pennsylvania, The Wharton School, 444 Vance Hall, Philadelphia, PA 19104, (215) 898–1219.

Mr. John Lenti, State Director, University of South Carolina, College of Business Admin., 1710 College Street, Columbia, SC 29208, (803) 777–4907.

Dr. Kenneth J. Burns, State Director, University of Memphis, South Campus, Building #1, Memphis, TN 38152, (901) 678–2500.

Dr. Stephen L. Marder, Executive Director, University of Guam, P.O. Box 5061, UOG Station, Mangilao, GU 96923, (671) 735–2590,1,2,3.

Mr. Wally Kearns, State Director, University of North Dakota, Gamble Hall, University Station, Grand Forks, ND 58202–7308, (701) 777–3700.

Ms. Erica McIntyre, State Director, University of Wisconsin, 432 North Lake Street, Room 423, Madison, WI 53706, (608) 262–3878.

Mr. Douglas Jobling, State Director, Bryant College, 1150 Douglas Pike, Smithfield, RI 02917, (401) 232–6111.

Mr Robert Ashley, State Director, University of South Dakota, School of Business, 414 East Clark, Vermillion, SD 57069, (605) 677–5498.

Ms. Carol Riesenberg, State Director, Washington State University, 501 Johnson Tower, Pullman, WA 99164–4851, (509) 335–1576.

[FR Doc. 96–25264 Filed 10–3–96; 8:45 am]

BILLING CODE 8025–01–P

DEPARTMENT OF STATE

[Public Notice No. 2441]

Bureau of Intelligence and Research; Discretionary Grant Programs: Application Notice Establishing Closing Date for Transmittal of Certain Fiscal Year 1997 Applications

AGENCY: The Department of State invites applications from national organizations with interest and expertise in conducing research and training to serve as intermediaries administering national competitive programs concerning the countries of Eastern Europe and the independent states of the former Soviet Union. The grants will be awarded through an open, national competition among applicant organizations.

Authority for this Program for Research and Training on Eastern Europe and the Independent States of the Former Soviet Union is contained in the Soviet-Eastern European Research and Training Act of 1983 (22 U.S.C. 4501–4508, as amended).

SUMMARY: The purpose of this application notice is to inform potential applicant organizations of fiscal and programmatic information and closing dates for transmittal of applications for awards in Fiscal Year 1997 under a program administered by the Department of State.

ORGANIZATION OF NOTICE: This notice contains three parts. Part I lists the closing date covered by this notice. Part II consists of a statement of purpose and priorities of the program. Part III provides the fiscal data for the program.

Part I

Closing Date for Transmittal of Applications

An application for an award must be mailed or hand-delivered by January 17, 1997.

Applications Delivered by Mail

An application sent by mail must be addressed to Kenneth E. Roberts, Executive Director, Advisory Committee for Studies of Eastern Europe and the Independent States of the Former Soviet Union, INR/RES, Room 6841, U.S. Department of State, 2201 C Street, NW., Washington, DC 20520–6510.

An applicant must show proof of mailing consisting of *one* of the following:

(1) A legibly dated U.S. Postal Service postmark.

(2) A legible mail receipt with the date of mailing stamped by the U.S. Postal Service.

(3) A dated shipping label, invoice, or receipt from a commercial center.

(4) Any other proof of mailing acceptable to the Department of State.

If any application is sent through the U.S. Postal Service, the Department of State does not accept either of the following as proof of mailing: (1) A private metered postmark, or (2) a mail receipt that is not dated by the U.S. Postal Service.

An applicant should note that the U.S. Postal Service does not uniformly provide a dated postmark. Before relying on this method, an applicant should check with the local post office.

An applicant is encouraged to use registered or at least first class mail. Late applications will not be considered and will be returned to the applicant.

Applications Delivered by Hand

An application that is hand delivered must be taken to Kenneth E. Roberts, Executive Director, Advisory Committee for Studies of Eastern Europe and the Independent States of the Former Soviet Union, INR/RES, Room 6841, 2201 C Street, NW., Washington, DC. Please phone first ((202) 736–4572) to ensure access to the building.

The Advisory Committee staff will accept hand-delivered applications between 9:00 a.m. and 4:00 p.m. EST daily, except Saturdays, Sundays, and Federal holidays.

An application that is hand delivered will not be accepted after 4:00 p.m. on the closing date.

Part II

Program Information

In the Soviet-Eastern European Research and Training Act of 1983 the Congress declared that independently verified factual knowledge about the countries of that area is ''of utmost importance for the national security of the United States, for the furtherance of our national interests in the conduct of foreign relations, and for the prudent management of our domestic affairs.'' Congress also declared that the development and maintenance of such knowledge and expertise ''depends upon the national capability for advanced research by highly trained and experienced specialists, available for service in and out of Government.'' The program provides financial support for advanced research, training and other related functions on the countries of the region. By strengthening and sustaining in the United States a cadre of experts on Eastern Europe and the independent states of the former Soviet Union, the program contributes to the overall objectives of the FREEDOM Support and SEED programs.

The full purpose of the Act and the eligibility requirements are set forth in

Pub. L. 98–164, 97 Stat. 1047–50, as amended. The countries include Albania, Armenia, Azerbaijan, Belarus, Bulgaria, Czech Republic, Estonia, Georgia, Hungary, Kazakstan, Kyrgyz Republic, Latvia, Lithuania, Moldova, Poland, Romania, Russia, Slovakia, Tajikistan, Turkmenistan, Ukraine, Uzbekistan, Bosnia and Herzegovina, Slovenia, Croatia, Serbia (including Kosovo and Montenegro), and the Former Yugoslav Republic of Macedonia.

The Act establishes an Advisory Committee to recommend grant polices and recipients. The Secretary of State, after consultation with the Advisory Committee, approves policies and makes final determination on awards.

Applications for funding under the Act are invited from U.S. organizations prepared to conduct competitive programs on the independent states of the former Soviet Union and the countries of Eastern Europe and related fields. Applying organizations or institutions should have the capability to conduct competitive award programs that are national in scope. Programs of this nature are those that make awards which are based upon an open, nationwide competitive, incorporating peer group review mechanisms. Individual end-users of these funds—those to whom the applicant organizations or institutions propose to make awards—must be at the graduate or post-doctoral levels, and must have demonstrated a likely career commitment to the study of Eastern Europe and/or the independent states of the former Soviet Union.

Applications sought in this competition among organizations or institutions are those that would contribute to the development of a stable, long-term, national program of unclassified, advanced research and training on the countries of Eastern Europe and/or the independent states of the former Soviet Union by proposing:

(1) *National programs* which award contracts or grants to American institutions of higher education or not-for-profit corporations in support of post-doctoral or equivalent level research projects, such contracts or grants to contain shared-cost provisions;

(2) *National programs* which offer graduate, post-doctoral and teaching fellowships for advanced training on the countries of Eastern Europe and the independent states of the Former Soviet Union, and in related studies, including training in the languages of the region, with such training to be conducted on a shared-cost basis, at American institutions of higher education;

(3) *National programs* which provide fellowships and other support for American specialists enabling them to conduct advanced research on the countries of Eastern Europe and the independent states of the former Soviet Union, and in related studies; and those which facilitate research collaboration between Government and private specialists in these areas;

(4) *National programs* which provide advanced training and research on a reciprocal basis in the countries of Eastern Europe and the independent states of the former Soviet Union by facilitating access for American specialists to research facilities and resources in those countries;

(5) *National programs* which facilitate the public dissemination of research methods, data and findings; and those which propose to strengthen the national capability for advanced research or training on the countries of Eastern Europe and the independent states of the former Soviet Union in ways not specified above.

Note: The Advisory Committee will not consider applications from individuals to further their own training or research, or from institutions or organizations whose proposals are not for competitive award programs that are national in scope as defined above.

Support for specific activities will be guided by the following policies:

—*Publications.* Funds awarded in this competition should not be used to subsidize journals, newsletters and other periodical publications except in special circumstances, in which cases the funds should be supplied through peer-review organizations with national competitive programs.

—*Conferences.* Proposals for conferences, like those for research projects and training programs, should be assessed according to their relative contribution to the advancement of knowledge and to the professional development of cadres in the fields. Therefore, requests for conference funding should be directed to one or more of the national peer-review organizations receiving program funds, with proposed conferences being evaluated competitively against research, fellowship or other proposals for achieving the purposes of the grant.

—*Library Activities.* Funds may be used for certain library activities which clearly strengthen research and training on the countries of Eastern Europe and the independent states of the former Soviet Union and benefit the fields as a whole. Such programs must make awards based upon open, nationwide competition, incorporating peer group review mechanisms. Funds may not be used for activities such as modernization, acquisition, or preservation. Modest, cost-effective proposals to facilitate research, by eliminating serious cataloging backlogs or otherwise improving access to research materials, will be considered.

—*Language Support.* The Advisory Committee encourages attention to the non-Russian languages of the independent states of the former Soviet Union and the less commonly taught languages of the East European countries. Support provided for Russian language instruction/study normally will be only for advanced level. Applicants proposing to offer language instruction are encouraged to apply to a national program as described above which has appropriate peer group review mechanisms.

—*Support for Non-Americans.* The purpose of the program is to build and sustain U.S. expertise on the countries of Eastern Europe and the independent states of the former Soviet Union. Therefore, the Advisory Committee has determined that highest priority for support always should go to American specialists (i.e., U.S. citizens or permanent residents). Support for such activities as long-term research fellowships, i.e., nine months or longer, should be restricted solely to American scholars. Support for short-term activities also should be restricted to Americans, except in special instances where the participation of a non-American scholar has clear and demonstrable benefits to the American scholarly community. In such special instances, the applicant must justify the expenditure.

—*Support for Transitions.* The Advisory Committee encourages support for activities which, while building expertise among U.S. specialists on the region, *also* may promote fundamental goals of U.S. assistance programs such as helping establish market economies and promoting democratic governance and civil societies.

In making its recommendations, the Committee will seek to encourage a coherent, long-term, and stable effort directed toward developing and maintaining a national capability on the countries of Eastern Europe and the independent states of the former Soviet Union. Program proposals can be for the conduct of any of the functions enumerated, but in making its

recommendations, the Committee will be concerned to develop a balanced national effort which will ensure attention to all the countries of the area. Legislation requires and this announcement indicates under *Program Information* of this section that in certain cases grantee organizations must include shared-cost provisions in their arrangements with end-users. Cost-sharing is encouraged, whenever feasible, in all programs.

Part III

Availabe Funds

Awards are contingent upon the availability of funds. Funding may be available at a level up to $5.0 million. The precise level of funding will not be known until legislative action is complete. In Fiscal Year 1996, the Congress appropriated to the program $5.0 million from the Agency for International Development budget.

The Department legally cannot commit funds that may be appropriated in subsequent fiscal years. Thus multi-year projects cannot received assured funding unless such funding is supplied out of a single year's appropriation. Grant agreements may permit the expenditure from a particular year's grant to be made from 12 to 18 months after the grant's effective date.

Applications

Applications must be prepared and submitted in 20 copies in the form of a statement, the narrative part of which should not exceed 20 double-spaced pages. This must be accompanied by a one-page executive summary, a budget, and vitae of key professional staff. Proposers may append other information they consider essential, although bulky submissions are discouraged and run the risk of not being reviewed fully. The one-page summary and budget should precede the narrative in the proposal.

Proposed programs should be described fully, including benefits for the fields. All applicants should provide detailed information about their plans for peer evaluation and review procedures and estimates of the types and amount of anticipated awards.

Applicants who have received a grant from this program in the previous competition should provide detailed information on the peer evaluation and review procedures followed, and awards made, including where applicable, names/affiliations of recipients, and amounts and types of awards. If an applicant received support prior to the last competition, a summary of those awards also should be included.

Descriptions of all competitive award programs should specify both past and anticipated applicant-to-award ratios.

Proposals from national organizations involving language instruction programs should provide for those programs supported in the past year information on the criteria for evaluation, including levels of instruction, degrees of intensiveness, facilities, methods for measuring language proficiency (including pre- and post-testing), instructors' qualifications, and budget information showing estimated costs per student.

A description of affirmative action policies and practices must be included in the application.

Applications should include certifications of compliance with the provisions of: (1) The Drug-Free Workplace Act (Pub. L. 100–690), in accordance with Appendix C of 22 CFR part 137, Subpart F; and (2) section 319 of the Department of the Interior and Related Agencies Appropriations Act (Pub. L. 101–121), in accordance with Appendix A of 22 CFR part 138, New Restrictions on Lobbying Activities.

Budget

Since funds provided by AID would come separately from its East Europe (including the Baltic states) and New Independent States programs, proposals must indicate how the requested funds will be distributed by region, country (to the extent possible), and activity. Subsequently, grant recipients must report expenditures by region, country, and activity.

Applicants should familiarize themselves with Department of State grant regulations contained in 22 CFR part 145, ''Grants and Cooperative Agreements with Institutions of Higher Education, Hospitals, and Other Non-Profit Organizations,'' OMB Circular A–110, ''Grants and Agreements with Institutions of Higher Education * * * Uniform Administrative Requirements,'' and OMB Circular A–133, ''Audits of Institutions of Higher Learning and Other Non-Profit Institutions'' and indicate or provide the following information:

(1) Whether the organization falls under OMB Circular No. A–21, ''Cost Principles for Educational Institutions,'' or OMB Circular No. A–122, ''Cost Principles for Nonprofit Organizations;''

(2) A detailed program budget indicating direct expenses by program element, by region (the independent states of the former Soviet Union or Eastern Europe), indirect costs, and the total amount requested. NB: Indirect costs are limited to 10 percent of total direct program costs. Applicants requesting funds to supplement a program having other sources of support should submit a current budget for the total program and an estimated future budget for it showing how specific lines in the budget would be affected by the allocation of requested grant funds. Other funding sources and amounts, when known, should be identified.

(3) The applicant's cost-sharing proposal, if applicable, containing appropriate details and cross references to the requested budget;

(4) The organization's most recent audit report (the most recent U.S. Government audit report if available) and the name, address, and point of contact of the audit agency.

All payments will be made to grant recipients through the Department of State.

Technical Review

The Advisory Committee for Studies of Eastern Europe and the Independent States of the Former Soviet Union will evaluate applications on the basis of the following criteria:

(1) Responsiveness to the substantive provisions set forth above in *Part II, Program Information* (45 points);

(2) The professional qualifications of the applicant's key personnel and their experience conducting national competitive award programs of the type the applicant proposes on the countries of Eastern Europe and the independent states of the former Soviet Union (35 points); and

(3) Budget presentation and cost effectiveness (20 points).

Further Information

For further information, contact Kenneth E. Roberts, Executive Director, Advisory Committee for Studies of Eastern Europe and the Independent States of the Former Soviet Union, INR/RES, Room 6841, U.S. Department of State, 2201 C Street, NW., Washington, DC 20520–6510. Telephone: (202) 736–4572 or 736–4386; fax: (202) 736–4851.

Dated: September 24, 1996.

Kenneth E. Roberts,

Executive Director, Advisory Committee for Studies of Eastern Europe and the Independent States of the Former Soviet Union.

[FR Doc. 96–25451 Filed 10–3–96; 8:45 am]

BILLING CODE 4710–32–M

OFFICE OF THE UNITED STATES TRADE REPRESENTATIVE

Trade Policy Staff Committee (TPSC); Generalized System of Preferences (GSP); Notice of Review of Product and Country Practices Petitions, Public Hearings, and List of Articles Sent to the United States International Trade Commission (USITC) for Review; Notice Regarding 1996 Annual Review

AGENCY: Office of the United States Trade Representative.

ACTION: Announcement of the review timetable and opportunity for public comment on the product petitions accepted for consideration in the 1995 Annual GSP Review in a Federal Register notice of July 28, 1995 (60 FR 38856); announcement of country practices petitions accepted for consideration in the 1995 Annual GSP Review; announcement of timetable for public hearings to consider petitions accepted for review; announcement of amendments in the list of articles sent to the USITC for review, announcement regarding 1996 Annual GSP Review; announcement regarding termination of country practice petitions.

SUMMARY: The purpose of this notice on the 1995 Annual GSP Review is: (1) To set forth the review timetable and provide an opportunity for public comment on product petitions accepted in the 1995 Annual GSP review requesting a modification in the list of articles that are eligible for duty-free treatment under the GSP program; (2) announce the acceptance for review of and provide an opportunity for public comments on petitions to modify the status of GSP beneficiary countries in regard to their practices as specified in 15 CFR 2007.0(a) and (b); (3) to announce the timetable for public hearings to consider petitions accepted for review; (4) to announce amendments to the list of articles sent by USTR on August 23, 1996, to the USITC to seek advice with respect to eligibility for GSP benefits; and (5) to announce the satisfactory completion of two country practice reviews.

For Further Information Contact: GSP Subcommittee, Office of the United States Trade Representative, 600 17th Street, NW, Room 517, Washington, DC 20508. The telephone number if (202) 395–6971. Public versions of all documents relating to this review will be available for review by appointment in the USTR public reading room. Appointments may be made from 10 a.m. to noon and 1 p.m. to 4 p.m. by calling (202) 395–6186.

SUPPLEMENTARY INFORMATION: The GSP program grants duty-free treatment to designated eligible articles that are imported from designated beneficiary developing countries. The GSP program is authorized by Title V of the Trade Act of 1974, as amended (''Trade Act'') (19 U.S.C. 2461 *et seq.*), and was implemented by Executive Order 11888 of November 24, 1975, and modified by subsequent Executive Orders and Presidential Proclamations. The GSP regulations provide for an annual GSP review, unless otherwise specified by Federal Register notice (15 CFR 2007.3 *et seq.*). In a Federal Register notice dated July 28, 1995 (60 FR 38856), USTR announced the acceptance of product petitions for review and the ongoing consideration by USTR of petitions requesting that certain practices in certain beneficiary developing countries be reviewed to determined whether such countries are in compliance with the eligibility criteria that are set forth in sections 502(b) and 502(c) of the Trade Act (19 U.S.C. 2462 (b) and 2462 (c)). As a result of the expiration of the GSP program on July 31, 1995, USTR did not announce a review timetable for product petitions or which of the so-called ''country practices'' petitions were under consideration. USTR stated in the notice that it would make such announcement and offer an opportunity for public comment upon reauthorization of the GSP program. Legislation reauthorizing the GSP program effective October 1, 1996 and making certain amendments to it was signed by the President on August 20, 1996 (Public Law 104–188, 110 Stat. 1755) (Small Business Job Protection Act of 1996—for the GSP related provisions, see subtitle J of Title I of the foregoing Act).

I. Acceptance of Petitions for Review

USTR accepted petitions requesting modification of the list of articles eligible to receive duty-free treatment under the GSP and to review the GSP status of beneficiary countries, as provided in title V of the Trade Act. USTR will review these petitions pursuant to regulations codified at 15 CFR part 2007. Acceptance for review of the petitions does not indicate any opinion with respect to disposition on the merits of the petitions. Acceptance indicates only that the listed petitions have been found eligible for review by the GSP Subcommittee and the Trade Policy Staff Committee, and that such review will take place.

A. Requests To Modify Product Eligibility

USTR accepted petitions from interested parties and foreign governments: (1) To designate articles as eligible for the GSP; (2) to withdraw, suspend or limit GSP duty-free treatment accorded either to eligible articles under the GSP or to individual beneficiary developing countries with respect to specific GSP eligible articles; and (3) to waive competitive need limits.

As in previous reviews, petitions to add or remove products from the list of articles eligible for GSP duty-free treatment will be evaluated in accordance with the ''graduation'' policy. Limitations on GSP eligibility will be considered for products of the more economically advanced beneficiary developing countries that have demonstrated sufficient competitiveness in those products. Four criteria will be taken into account in considering ''graduation:'' the development level of the individual beneficiary country; its competitive position in the product concerned; the country's practices relating to trade, investment and worker rights; and the overall economic interests of the United States.

Product designations announced at the conclusion of the review process, therefore, may differ. Certain beneficiary developing countries may lose GSP benefits for certain products even though those products have not met competitive need limitations set forth in section 503(c)(2)(A) of the Trade Act.

As in previous reviews, articles which are determined to be import sensitive cannot be designated as eligible articles. USTR is required to seek the advice of the U.S. International Trade Commission (USITC) on the probable effects of the requested designation of a product for GSP on industries producing like or directly competitive articles and on consumers.

On August 20, 1996, USTR requested the USITC to provide this advice. At the same time, USTR asked the USITC to furnish economic advice on the probable economic effect on U.S. industries producing like or directly competitive articles, and on consumers, of the granting of a waiver of the competitive need limits for certain products.

A nonconfidential version of the USITC analysis will be available to the public approximately December 20, 1996. The deadline for public comments on this nonconfidential analysis in January 15, 1997. Comments should be

submitted in accordance with the procedures described below.

Any modifications to the list of articles eligible for duty-free treatment under the GSP program resulting from the 1995 Annual GSP Review will be announced on or about April 1, 1997, and will take effect as soon as possible thereafter.

B. Cases Accepted for Review Regarding Country Practices

Pursuant to 15 CFR 2007.0(b), the Trade Policy Staff Committee has accepted for review requests to review the GSP status of Panama and Paraguay concerning the alleged failure of each to provided adequate and effective protection for intellectual property rights.

Any modifications to the list of beneficiary developing countries for purposes of the GSP program resulting from the 1995 Annual GSP Review will take effect on such date as appears in the Federal Register.

Opportunities for Public Comment and Inspection of Comments

The GSP Subcommittee of the TPSC invites comments in support of or in opposition to any petition which is the subject of this notice. Submissions should conform to 15 CFR 2007, particularly 2007.0, 2007.1(a)(10, 2007.1(a)(2), and 2007.1(a)(3). All submissions should identify the subject article(s) in terms of the current Harmonized Tariff Schedule of the United States (''HTS'') nomenclature.

Comments should be submitted in fourteen (14) copies, in English, to the Chairman of the GSP Subcommittee of the Trade Policy Staff Committee, 600 17th Street, N.W., Room 517, Washington, DC 20506. Information submitted will be subject to public inspection by appointment with the staff of the USTR public reading room, except for information granted ''business confidential'' status pursuant to 15 CFR 2203.6 and other qualifying information submitted in confidence pursuant to 15 CFR 2007.7. If the document contains business confidential information, and original and fourteen (14) copies of a nonconfidential version of the submission along with an original and fourteen (14) copies of the confidential version must be submitted. In addition, the document containing confidential information should be clearly marked ''confidential'' at the top and bottom of each page of the document. The version that does not contain business confidential information (the public version) should also be clearly marked at the top and bottom of every page (either ''public version'' or ''nonconfidential'').

Comments should be submitted no later than October 29, 1996.

III. Notice of Public Hearings

Hearings will be held on November 13, and 14, 1996, beginning at 10 a.m. at a location in Washington, DC to be announced. The hearing will be open to the public and a transcript of the hearings will be made available for public inspection or can be purchased from the reporting company. No electronic media coverage will be allowed.

All interested parties wishing to make an oral presentation at the hearings must submit the name, address, and telephone number of the witness(es) representing their organization to the Chairman of the GSP Subcommittee by 5 p.m. October 29, 1996. Requests to present oral testimony in connection with the public hearings should be accompanied for fourteen (14) copies, in English, of all written briefs or statements, and should also be received by 5 p.m. on October 29, 1996. Oral testimony before the GSP Subcommittee will be limited to five minute presentations that summarize or supplement information contained in briefs or statements submitted for the record. Post-hearing briefs or statements will be accepted if they conform with the regulations cited above and are submitted in fourteen (14) copies, in English, no later that 5 p.m. December 11, 1996. Parties not wishing to appear at the public hearings may submit pre-hearing written briefs or statements by October 29, 1996, and may submit post-hearing written briefs or statements by December 11, 1996. Rebuttal briefs or statements should be submitted in fourteen (14) copies, in English, by 5 p.m. January 8, 1997.

All communications with regard to these hearings should be addressed to: GSP Subcommittee, Office of the United States Trade Representative, 600 17th Street, NW., Room 517, Washington, DC 20508. The telephone number is (202) 395–6971. Questions may be directed to any member of the staff of the GSP Information Center.

IV. Notice of Amendment to the List of Articles Subject to Review

On July 28, 1995, USTR published the list of articles subject to review in the Federal Register (60 FR 38856). USTR has made certain amendments to that list. Case numbers 95–21, 95–29, 95–31, 95–33, 95–35, 95–39 and 95–43 (the competitive need limit waivers petitions for Malaysia) have been deleted due to the proposed graduation of Malaysia from GSP effective January 1, 1997. Due to changes in the nomenclature of the HTS effective January 1, 1996, the list of articles in the notice are modified by changing the HTS subheading for case number 95–28 to 8469.12.00, changing the HTS subheading for case number 95–30 into two subheadings and subdividing the case into case number 95–30A for 8471.49.26 and case number 95–30B for 8471.60.35, changing the HTS subheading for case number 95–32 into two subheading and subdividing the case into case number 95–32A for 8517.19.40 and case number 95–32B for 8517.19.80, and changing the HTS subheading for case number 95–34 to 8517.21.00.

V. Notice Regarding 1996 Annual Review of GSP and Least Developed Beneficiary Developing Country Review

Ordinarily, the TPSC would have invited the submission of petitions for the 1996 Annual GSP Review on June 1, 1996. At that time, however, the program had not been reauthorized. The legislation reinstating the GSP program is effective October 1, 1996 with a provision permitting refunding by Customs after October 1, 1996, of duties that would not have been paid between July 31, 1995 and October 1, 1996 if the GSP program had been in effect. But because the legislation only provides for extension of the GSP program until May 31, 1997, the TPSC has decided that it will not solicit petitions for the 1996 Annual GSP Review.

An announcement will appear at a later date in the Federal Register concerning the timetable of the review to add products to the GSP program only for the least developed beneficiary developing countries as provided for in the amended GSP statute.

VI. Terminated Country Practice Reviews

Due to progress in protecting intellectual property rights, the reviews of El Salvador and Poland have been terminated.

Frederick L. Montgomery,

Chairman, Trade Policy Staff Committee.

[FR Doc. 96–25413 Filed 10–3–96; 8:45 am]

BILLING CODE 3190–01–M

DEPARTMENT OF TRANSPORTATION

Office of the Secretary

Reports, Forms and Recordkeeping Requirements; Agency Information Collection Activity Under OMB Review

AGENCY: Department of Transportation (DOT).

ACTION: Notice.

SUMMARY: In compliance with the Paperwork Reduction Act (44 U.S.C. 3501 et seq.), this notice announces that the Information Collection Request (ICR) abstracted below has been forwarded to the Office of Management and Budget (OMB) for review and comment. The ICR describes the nature of the information collection and its expected cost and burden. The Federal Register Notice with a 60-day comment period soliciting comments on the following collections of information was published on July 16, 1996 [FR 61, page 37104].

DATES: Comments must be submitted on or before November 4, 1996.

FOR FURTHER INFORMATION CONTACT: Bernie Stankus, Office of Airline Information, K–25, Bureau of Transportation Statistics, 400 Seventh Street, SW., Washington, DC. 20590, (202) 366–4387.

SUPPLEMENTARY INFORMATION:

Bureau of Transportation Statistics (BTS)

1. Title: Reporting Required for International Civil Aviation Organization (ICAO).

Type of Request: Extension of a currently approved information collection.

OMB Control Number: 2138–0039.

Form Number: BTS Form EF.

Affected Public: Large certificated air carriers.

Abstract: As a party to the Convention on International Civil Aviation Organization (ICAO) (Treaty), the United States is obligated to provide ICAO with financial and statistical data on operations of U.S. air carriers. Over 99 percent of the data filed with ICAO is extracted from the air carriers' Form 41 submissions to DOT. BTS Form EF is the means by which BTS supplies the remaining one percent of the air carrier data to ICAO.

Estimated Annual Burden: The total estimated annual burden hours is 26.

ADDRESSES: Send comments to the Office of Information and Regulatory Affairs, Office of Management and Budget, 725–17th Street, NW., Washington, DC 20503, Attention OST Desk Officer.

Comments are Invited on: whether the proposed collection of information is necessary for the proper performance of the functions of the Department, including whether the information will have practical utility; the accuracy of the Department's estimate of the burden of the proposed information collection; ways to enhance the quality, utility and clarity of the information to be collected; and ways to minimize the burden of the collection of information on respondents, including the use of automated collection techniques or other forms of information technology.

Issued in Washington, DC, on September 26, 1996.

Phillip A. Leach,

Clearance Officer, United States Department of Transportation.

[FR Doc. 96–25495 Filed 10–3–96; 8:45 am]

BILLING CODE 4910–62–P

Aviation Proceedings; Agreements Filed During the Week Ending 9/27/96

The following Agreements were filed with the Department of Transportation under the provisions of 49 U.S.C. 412 and 414. Answers may be filed within 21 days of date of filing.

Docket Number: OST–96–1728.

Date filed: September 23, 1996.

Parties: Members of the International Air Transport Association.

Subject: TC12 Telex Mail Vote 827; South Atlantic-Europe Reso 003b; Amendment to Mail Vote; Intended effective date: October 21, 1996.

Docket Number: OST–96–1729.

Date filed: September 23, 1996.

Parties: Members of the International Air Transport Association.

Subject: PTC1 0003 dated August 30, 1996; Areawide Resolutions R1–6; PTC1 0006 dated August 30, 1996; Longhaul Resolutions r7–63; Tables—PTC1 Fares 0004 dated September 20, 1996; Intended effective date: January 1, 1997.

Docket Number: OST–96–1737.

Date filed: September 23, 1996.

Parties: Members of the International Air Transport Association.

Subject: PTC23 EUR–SASC 0002 dated September 20, 1996 r1–3; PTC23 EUR–SASC 0003 dated September 20, 1996 r4–10; Europe-South Asian Subcontinent Expedited Resos; Intended effective date: as early as October 15, 1996.

Paulette V. Twine,

Chief Documentary Services Division.

[FR Doc. 96–25454 Filed 10–3–96; 8:45 am]

BILLING CODE 4910–62–P

Federal Aviation Administration

Kansas City International Airport, Kansas City, Missouri; FAA Approval of Noise Compatibility Program

AGENCY: Federal Aviation Administration, DOT.

ACTION: Notice.

SUMMARY: The Federal Aviation Administration (FAA) announces its findings on the Noise Compatibility Program submitted by the city of Kansas City under the provisions of Title I of the Aviation Safety and Noise Abatement Act (ASNA) of 1979 (Public Law 96–193) and 14 CFR part 150. These findings are made in recognition of the description of Federal and nonfederal responsibilities in Senate Report No. 96–52 (1980). On February 9, 1996, the FAA determined that the Noise Exposure Maps submitted by the city of Kansas City under part 150 were in compliance with applicable requirements. On August 5, 1996, the Associate Administrator for Airports approved the Kansas City International Airport Noise Compatibility Program. Of the 24 recommended measures, 19 measures were approved, one measure was partially approved, 3 measures were disapproved for part 150 purposes, and one measure was disapproved pending further submittal of information. While three measures were disapproved because they did not meet part 150 criteria, they were zoning measures that the FAA would encourage Kansas City to implement as a local measure outside of the part 150 process.

EFFECTIVE DATE: The effective date of the FAA's approval of the Kansas City International Airport Noise Compatibility Program is August 5, 1996.

FOR FURTHER INFORMATION CONTACT: Moira D. Keane, ACE–615B, Federal Aviation Administration, Airports Division, 601 E. 12th St., Kansas City, Missouri 64106. Telephone No. (816) 426–4731. Documents reflecting this FAA action may be obtained from the same individual.

SUPPLEMENTARY INFORMATION: This notice announces that the FAA has given its overall approval to the Noise Compatibility Program for the Kansas City International Airport, effective August 5, 1996.

Under Section 104(a) the Aviation Safety and Noise Abatement Act (ASNA) of 1979, an airport operator who has previously submitted a Noise Exposure Map may submit to the FAA a Noise Compatibility Program which sets forth the measures taken or proposed by the airport operator for the reduction of existing noncompatible land uses and prevention of additional noncompatible land uses within the area covered by the Noise Exposure Maps. The Act requires such programs to be developed in consultation with interested and affected parties including local communities, government

agencies, airport users, and FAA personnel.

Each airport noise compatibility program developed in accordance with FAR part 150 is a local program, not a Federal program. The FAA does not substitute its judgment for that of the airport proprietor with respect to which measures should be recommended for action. The FAA's approval or disapproval of FAR part 150 program recommendations is measured according to the standards expressed in part 150 and the Aviation Safety and Noise Abatement Act of 1979, and is limited to the following determinations:

a. The noise compatibility program was developed in accordance with the provisions and procedures of FAR part 150;

b. Program measures are reasonably consistent with achieving the goals of reducing existing noncompatible land uses around the airport and preventing the introduction of additional noncompatible land uses;

c. Program measures would not create an undue burden on interstate or foreign commerce, unjustly discriminate against types or classes of aeronautical uses, violate the terms of airport grant agreements, or intrude into areas preempted by the Federal Government;

d. Program measures relating to the use of flight procedures can be implemented within the period covered by the program without derogating safety,adversely affecting the efficient use and management of the navigable Airspace and Air Traffic Control Systems, or adversely affecting other powers and responsibilities of the Administrator prescribed by law.

Specific limitations with respect to FAA's approval of an airport Noise Compatibility Program are delineated in FAR part 150, Section 150.5. Approval is not a determination concerning the acceptability of land uses under Federal, state, or local law. Approval does not by itself constitute an FAA implementing action. A request for Federal action or approval to implement specific noise compatibility measures may be required, and an FAA decision on the request may require an environmental assessment of the proposed action. Approval does not constitute a commitment by the FAA to financially assist in the implementation of the program nor a determination that all measures covered by the program are eligible for grant-in-aid funding from the FAA. Where Federal funding is sought, requests for project grants must be submitted to the FAA Regional Office in Kansas City, Missouri.

The city of Kansas City submitted to the FAA on August 14, 1995, the Noise Exposure Maps, descriptions, and other documentation produced during the Noise Compatibility Planning study. The Kansas City International Airport Noise Exposure Maps were determined by FAA to be in compliance with applicable requirements on February 9, 1996. Notice of this determination was published in the Federal REgister on February 26, 1996.

The Kansas City International Airport study contains a proposed Noise Compatibility Program comprised of actions designed for phased implementation by airport management and adjacent jurisdictions from the date of study completion to beyond the year 1998. It was requested that the FAA evaluate and approve this material as a noise compatibility program as described in Section 104(b) of the Act. The FAA began its review of the program on February 9, 1996, and was required by a provision in the Act to approve or disapprove the program within 180 days. Failure to approve or disapprove such program within the 180-day period shall be deemed to be an approval of such program.

The submitted program contained 24 proposed actions for noise abatement and mitigation on and off the airport. The FAA completed its review and determined that the procedural and substantive requirements of the Act and FAR part 150 have been satisfied. The overall program, therefore, was approved by the Associate Administrator effective August 5, 1996.

Outright approval was granted for 19 of the 24 program elements, one measure was partially approved, 3 measures were disapproved for part 150 purposes, and one measure was disapproved pending further submittal of information. Some of the approved noise abatement measures include establishment of informal preferential runway use program to favor north flow, acquisition of ten homes south of the airport within DNL 65 dB based on 1998 Noise Compatibility Plan, acquisition of aviation easements over three residences within DNL 65 dB based on 1998 Noise Compatibility Plan, and implementation or maintenance of numerous zoning measures.

These determinations are set forth in detail in a Record of Approval endorsed by the Associate Administrator on August 5, 1996. The Record of Approval, as well as other evaluation materials and the documents comprising the submittal, are available for review at the FAA office listed above and at the administrative offices for the Kansas City International Airport. Questions may be directed to the individual named above under the heading, **FOR FURTHER INFORMATION CONTACT.**

Issued in Kansas City, Missouri, on September 24, 1996.

George A. Hendon,

Manager, Airports Division.

[FR Doc. 96–25545 Filed 10–3–96; 8:45 am]

BILLING CODE 4910–13–M

[Summary Notice No. PE–96–46]

Petitions for Exemption; Summary of Petitions Received; Dispositions of Petitions Issued

AGENCY: Federal Aviation Administration (FAA), DOT.

ACTION: Notice of petitions for exemption received and of dispositions of prior petitions.

SUMMARY: Pursuant to FAA's rulemaking provisions governing the application, processing, and disposition of petitions for exemption (14 CFR Part 11), this notice contains a summary of certain petitions seeking relief from specified requirements of the Federal Aviation Regulations (14 CFR Chapter I), dispositions of certain petitions previously received, and corrections. The purpose of this notice is to improve the public's awareness of, and participation in, this aspect of FAA's regulatory activities. Neither publication of this notice nor the inclusion or omission of information in the summary is intended to affect the legal status of any petition or its final disposition.

DATES: Comments on petitions received must identify the petition docket number involved and must be received on or before October 23, 1996.

ADDRESSES: Send comments on any petition in triplicate to: Federal Aviation Administration, Office of the Chief Counsel, Attn: Rule Docket (AGC–200), Petition Docket No. _____, 800 Independence Avenue, SW., Washington, DC 20591.

Comments may also be sent electronically to the following internet address: nprmcmts@mail.hq.faa.gov.

The petition, any comments received, and a copy of any final disposition are filed in the assigned regulatory docket and are available for examination in the Rules Docket (AGC–200), Room 915G, FAA Headquarters Building (FOB 10A), 800 Independence Avenue, SW., Washington, DC 20591; telephone (202) 267–3132.

FOR FURTHER INFORMATION CONTACT: Mr. Fred Haynes, (202) 267–3939, or Ms. Marisa Mullen, (202) 267–9681, Office of Rulemaking (ARM–1), Federal Aviation Administration, 800

Independence Avenue, SW., Washington, DC 20591.

This notice is published pursuant to paragraphs (c), (e), and (g) of § 11.27 of Part 11 of the Federal Aviation Regulations (14 CFR Part 11).

Issued in Washington, DC, on September 30, 1996.

Joseph A. Conte,

Acting Assistant Chief Counsel for Regulations.

Dispositions of Petitions

Docket No.: 22822.

Petitioner: T.B.M., Inc.

Sections of the FAR Affected: 14 CFR § 91.611.

Description of Relief Sought/ Disposition: To permit T.B.M. and its subsidiary, Butler Aircraft Company (BAC), to conduct ferry flights with one engine inoperative on their DC–6 and DC–7 series aircraft without obtaining a special flight permit for each flight. *Grant, July 31, 1996, Exemption No. 5204C.*

Docket No.: 23543.

Petitioner: Arnautical Training Center.

Sections of the FAR Affected: 14 CFR §§ 61.55(b)(3); 61.56(h) (1), (2), and (4), 61.57 (c)(3) and (d)(2); 61.58(e); 61.64(e)(3); 61.65 (e)(2), (g)(1) and (3); 61.67 (c)(4) and (d)(2); 61.158(d)(1); 61.191(d); and 61.197(e).

Description of Relief Sought/ Disposition: To permit Arnautical to continue to use FAA-approved simulators to meet certain flight experience requirements. *Grant, July 31, 1996, Exemption No. 4581E.*

Docket No.: 26188.

Petitioner: Advanced Flight Simulation, Inc.

Sections of the FAR Affected: 14 CFR §§ 61.55(b)(3); 61.56(h) (1), (2), and (4), 61.57 (c)(3) and (d)(2); 61.58(e); 61.64(e)(3); 61.65 (e)(2), (g)(1) and (3); 61.67 (c)(4) and (d)(2); 61.158(d)(1); 61.191(d); and 61.197(e).

Description of Relief Sought/ Disposition: To allow Advanced Flight Simulation, Inc. to continue to use FAA-approved simulators to meet certain flight experience requirement. *Grant, July 31, 1996, Exemption No. 5205C.*

Docket No.: 26609.

Petitioner: Jet-Exam/Jet Crew.

Sections of the FAR Affected: 14 CFR §§ 61.55(b)(3); 61.56(h) (1), (2), and (4), 61.57 (c)(3) and (d)(2); 61.58(e); 61.64(e)(3); 61.65 (e)(2), (g)(1) and (3); 61.67 (c)(4) and (d)(2); 61.158(d)(1); 61.191(d); and 61.197(e).

Description of Relief Sought/ Disposition: To allow Jet Exam/Jet Crew, Inc. to continue to use FAA-approved simulators to meet certain flight experience requirements. *Grant, July 31, 1996, Exemption No. 5478B.*

Docket No.: 26667.

Petitioner: FlightSafety International.

Sections of the FAR Affected: 14 CFR §§ 121.402, 121.411(c) (2) and (3), 121.412(c) (2) and (3), 121.413 (c), (d), and (g), and 121.414 (c), (d), and (g).

Description of Relief Sought/ Disposition: To permit FlightSafety International, without holding an air carrier operating certificate, to train part 121 certificate holders' pilots, flight engineers, and check airmen in initial, transition, upgrade, differences, and recurrent training in FAA-approved simulators without FSI's instructors and check airmen meeting all the applicable training requirements of part 121, subpart N. The 1-year employment requirements of part 121 appendix H for certain instructor and check airmen, and the requirement to hold a 3rd class medical certificate are also exempted. *Grant, July 30, 1996, Exemption No. 5408D.*

Docket No.: 27237.

Petitioner: Midwest Express Airlines, Inc.

Sections of the FAR Affected: 14 CFR § 121.471 (a)(4) and (b)(2).

Description of Relief Sought/ Disposition: To allow Midwest Express to schedule a flight crewmember and allow that flight crewmember to accept a flight time assignment that would require the flight crewmember to exceed 8 hours of flight time between required rest periods and without receiving at least 10 consecutive hours of rest for 8 or more but less than 9 hours of scheduled flight time during the 24 consecutive hours preceding the scheduled completion of a flight segment. *Denial, August 2, 1996, Exemption No. 6493.*

Docket No.: 28552.

Petitioner: World Free Fall Convention.

Sections of the FAR Affected: 14 CFR § 105.43(a).

Description of Relief Sought/ Disposition: To permit nonstudent parachutists who are foreign nationals (foreign parachutists) to participate in a parachute jumping event sponsored by the WFFC without complying with the parachute equipment and packing requirements of the Federal Aviation Regulations. *Grant, July 31, 1996, Exemption No. 6492.*

[FR Doc. 96–25417 Filed 10–3–96; 8:45 am]

BILLING CODE 4910–13–M

[Summary Notice No. PE–96–47]

Petitions for Exemption; Summary of Petitions Received; Dispositions of Petitions Issued

AGENCY: Federal Aviation Administration (FAA), DOT.

ACTION: Notice of petitions for exemption received and of dispositions of prior petitions.

SUMMARY: Pursuant to FAA's rulemaking provisions governing the application, processing, and disposition of petitions for exemption (14 CFR Part 11), this notice contains a summary of certain petitions seeking relief from specified requirements of the Federal Aviation Regulations (14 CFR Chapter I), dispositions of certain petitions previously received, and corrections. The purpose of this notice is to improve the public's awareness of, and participation in, this aspect of FAA's regulatory activities. Neither publication of this notice nor the inclusion or omission of information in the summary is intended to affect the legal status of any petition or its final disposition.

DATES: Comments on petitions received must identify the petition docket number involved and must be received on or before October 23, 1996.

ADDRESSES: Send comments on any petition in triplicate to: Federal Aviation Administration, Office of the Chief Counsel, Attn: Rule Docket (AGC–200), Petition Docket No. _____, 800 Independence Avenue SW., Washington, DC 20591.

Comments may also be sent electronically to the following internet address: nprmcmts@mail.hq.faa.gov.

The petition, any comments received, and a copy of any final disposition are filed in the assigned regulatory docket and are available for examination in the Rules Docket (AGC–200), Room 915G, FAA Headquarters Building (FOB 10A), 800 Independence Avenue SW., Washington, DC 20591; telephone (202) 267–3132.

FOR FURTHER INFORMATION CONTACT:

Fred Haynes (202) 267–3939 or Marisa Mullen (202) 267–9681 Office of Rulemaking (ARM–1), Federal Aviation Administration, 800 Independence Avenue SW., Washington, DC 20591.

This notice is published pursuant to paragraphs (c), (e), and (g) of § 11.27 of Part 11 of the Federal Aviation Regulations (14 CFR Part 11).

Issued in Washington, DC, on September 30, 1996.

Joseph A. Conte,

Acting Assistant Chief Counsel for Regulations.

Petitions for Exemption

Docket No.: 28669.
Petitioner: Elsinore LP.
Sections of the FAR Affected: 14 CFR 25.857(e), 25.785(d), and 25.813(b).
Description of Relief Sought: To permit the carriage of supernumerary passengers on an all-freighter airplane, pursuant to issuance of a Supplemental Type Certificate for the conversion of Airbus A300B2/B4–200 series and A300–600 series aircraft from passenger to freighter configuration.

Dispositions of Petitions

Docket No.: 010SW.
Petitioner: McDonnell Douglas Helicopter Systems.
Sections of the FAR Affected: 14 CFR 27.1(a).
Description of Relief Sought/ Disposition: To permit an increase in maximum gross weight of the McDonnell Douglas Helicopter Systems Model MD900 from 6,000 to 7,000 pounds while maintaining the original normal category rotorcraft certification. *Grant, September 5, 1996, Exemption No. 6505.*

Docket No.: 22872.
Petitioner: Air Transport Association of America (ATA).
Sections of the FAR Affected: 14 CFR 61.157(a); Item I(b) of appendix A to part 61; 121.424 (a), (b) and (d) (1); Item I(a) of appendix E to part 121; and Item I(b) of appendix F to part 121.
Description of Relief Sought/ Disposition: To extend Exemption 4416 to continue to permit ATA member airlines and other qualifying part 121 certificate holders to conduct training and checking of pilots of airplanes requiring only two flight crewmembers on the required preflight inspection, both interior and exterior, using approved pictorial means. *Grant, August 16, 1996, Exemption No. 4416F.*

Docket No.: 23653.
Petitioner: University of North Dakota.
Sections of the FAR Affected: 14 CFR 141 Appendixes A, C, D, F, and H.
Description of Relief Sought/ Disposition: To extend and amend Exemption 3825 to continue to allow UND to graduate students who have been trained to a specific performance level rather than the minimum flight time requirements of part 141 and modify the curriculums in which students may be enrolled while training under this exemption. *Grant, August 14, 1996, Exemption No. 3825H.*

Docket No.: 26915.
Petitioner: Pan Am International Flight Academy, Inc.
Sections of the FAR Affected: 14 CFR 61.55(b)(3); 61.56(h) (1), (2), and (4); 61.57(c)(3) and (d)(2); 61.58(e); 61.64(e)(3); 61.65 (e)(2), and (g)(1) and (3); 61.67(c)(4) and (d)(2); 61.158(d)(1); 61.191(d); and 61.197(e).
Description of Relief Sought/ Disposition: To extend exemption 5495 to continue to allow Pan Am to use FAA-approved simulators to meet certain flight experience requirements of part 61.*Grant, August 21, 1996, Exemption No. 5495B.*

Docket No.: 27785.
Petitioner: Chevron U.S.A. Production Company.
Sections of the FAR Affected: 14 CFR 135.143(c)(2).
Description of Relief Sought/ Disposition: To extend Exemption No. 5948 to continue to allow the petitioner to operate without a TSO–C112 (Mode S) transponder installed on its aircraft operating under to provisions of part 135. *Grant, August 14, 1996, Exemption No. 5948A.*

Docket No.: 28556.
Petitioner: Harry Veltman.
Sections of the FAR Affected: 14 CFR 61.183(c)(2).
Description of Relief Sought/ Disposition: To allow the petitioner to be eligible for a flight instructor certificate with an airplane category rating, without holding an instrument rating. *Denial, August 13, 1996, Exemption No. 6498.*

Docket No.: 28598.
Petitioner: Boeing Commercial Airplane Group.
Sections of the FAR Affected: 14 CFR 25.1435(b)(1).
Description of Relief Sought/ Disposition: To allow type certification of the Model 777–300 by conducting a 3000 psig test of the modified/added hydraulic tubing runs form the stretched body sections, the spoiler retraction system, and any re-routed sections, while verifying the adequate clearances exist, and testing of the tail skid hydraulic system at the system relief pressure. *Grant, September 3, 1996, Exemption No. 6504.*

Docket No.: 28646.
Petitioner: Air Georgian, LTD.
Sections of the FAR Affected: 14 CFR 61.77(a).
Description of Relief Sought/ Disposition: To permit Air Georgian, LTD. pilots to be issued a special purpose pilot certificates to perform pilot duties on a Beechcraft-1900 (Registration No. N77YV), a civil airplane of U.S. registry, without that airplane meeting passenger seating configuration and payload capacity requirements. *Grant, August 16, 1996, Exemption No. 6496.*

Docket No.: 28646.
Petitioner: L. Harvey Poe, Jr.
Sections of the FAR Affected: 14 CFR 61.77(a).
Description of Relief Sought/ Disposition: To amend Exemption No. 6496 to correct the petitioner's name from AIR Georgian, Ltd. to Simo Air, Ltd. *Grant, August 22, 1996, Exemption No. 6596.*

[FR Doc. 96–25418 Filed 10–3–96; 8:45 am]

BILLING CODE 4910–13–M

[Summary Notice No. PE–96–48]

Petitions for Exemption; Summary of Petitions Received; Dispositions of Petitions Issued

AGENCY: Federal Aviation Administration (FAA), DOT.

ACTION: Notice of petitions for exemption received and of dispositions of prior petitions.

SUMMARY: Pursuant to FAA's rulemaking provisions governing the application, processing, and disposition of petitions for exemption (14 CFR Part 11), this notice contains a summary of certain petitions seeking relief from specified requirements of the Federal Aviation Regulations (14 CFR Chapter I), dispositions of certain petitions previously received, and corrections. The purpose of this notice is to improve the public's awareness of, and participation in, this aspect of FAA's regulatory activities. Neither publication of this notice nor the inclusion or omission of information in the summary is intended to affect the legal status of any petition or its final disposition.

DATES: Comments on petitions received must identify the petition docket number involved and must be received on or before October 24, 1996.

ADDRESSES: Send comment on any petition in triplicate to: Federal Aviation Administration, Office of the Chief Counsel, Attn: Rule Docket (AGC–200), Petition Docket No. _____, 800 Independence Avenue, SW., Washington, D.C. 20591.

Comments may also be sent electronically to the following internet address: nprmcmts@mail.hq.faa.gov.

The petition, any comments received, and a copy of any final disposition are filed in the assigned regulatory docket and are available for examination in the Rules Docket (AGC–200), Room 915G, FAA Headquarters Building (FOB 10A), 800 Independence Avenue, SW.,

Washington, D.C. 20591; telephone (202) 267–3132.

FOR FURTHER INFORMATION CONTACT: Fred Haynes (202) 267–3939 or Marisa Mullen (202) 267–9681 Office of Rulemaking (ARM–1), Federal Aviation Administration, 800 Independence Avenue, SW., Washington, DC 20591.

This notice is published pursuant to paragraphs (c), (e), and (g) of § 11.27 of Part 11 of the Federal Aviation Regulations (14 CFR Part 11).

Issued in Washington, D.C., on October 1, 1996.

Donald P. Byrne,

Assistant Chief Counsel for Regulations.

Petitions For Exemption

Docket No.: 132CE.

Petitioner: Raytheon Aircraft Company.

Sections of the FAR Affected: 14 CFR 23.25, 23.29, 23.235, 23.471, 23.473, 23.477, 23.479. 23.481, 23.483, 23.485, 23.493, 23.499, 23.723, 23.725, 23.726, 23.727, 23.959, 23.1583(c)(1)(2), Appendix C23, and Appendix D23.1.

Description of Relief Sought: To permit modification of the petitioner's Model 390 landing gear loads and associated airframe loads.

Docket No.: 28399.

Petitioner: Ameriflight, Inc.

Sections of the FAR Affected: 14 CFR 21.197(c)(2).

Description of Relief Sought: For the FAA to reconsider a previously issued Denial of Petition for exemption to allow the issuance of a special flight permit with continuing authorization to the petitioner for aircraft that are operated and maintained in accordance with 14 CFR § 135.411(a)(1) and § 135.419 ''Approved Aircraft Inspection Program.''

Dispositions of Petitions

Docket No.: 17145.

Petitioner: United Airlines.

Sections of the FAR Affected: 14 CFR 121.655 and 121.697 (a) and (b).

Description of Relief Sought/ Disposition: To permit the petitioner to use computerized load manifests that bear the name and position of the person responsible for loading the aircraft, instead of that person's signature. *Grant, August 26, 1996, Exemption No. 2466J.*

Docket No.: 26245.

Petitioner: Airline Crew Training Corporation.

Sections of the FAR Affected: 14 CFR 61.55(b)(3); 61.56(h) (1), (2), and (4); 61.57(c)(3) and (d)(2); 61.58(e); 61.64(e)(3); 61.65(e)(2), and (g) (1) and (3); 61.67(c)(4) and (d)(2); 61.158(d)(1); 61.191(d); and 61.197(e).

Description of Relief Sought/ Disposition: To permit the petitioner to continue to use FAA-approved simulators to meet certain flight experience requirements of part 61. *Grant, August 16, 1996, Exemption No. 5183D.*

Docket No.: 26542.

Petitioner: Sky Shows, Inc.

Sections of the FAR Affected: 14 CFR 105.43(a).

Description of Relief Sought/ Disposition: To allow Sky Shows' employees, representatives, and other volunteer experimental parachute test jumpers under its direction and control to make tandem parachute jumps for the purpose of meeting Technical Standard Order (TSO)–C23 certification requirements for live tests of its dual-harness, dual-parachute pack. Additionally, this exemption permits pilots in command of aircraft used to make these parachute jumps to allow such persons to make jumps wearing a dual-harness, dual-parachute pack. *Grant, August 30, 1996, Exemption No. 5491B.*

Docket No.: 26630.

Petitioner: Erickson Air-Crane Company.

Sections of the FAR Affected: 14 CFR 133.19(a)(3) and 133.51.

Description of Relief Sought/ Disposition: To allow the petitioner to conduct certain rotorcraft external-load operations in the United States using a Canadian-registered helicopter. *Grant, August 26, 1996, Exemption No. 5959A.*

Docket No.: 26819.

Petitioner: Vector Air Services.

Sections of the FAR Affected: 14 CFR 61.55(b)(3); 61.56(h) (1), (2), and (3); 61.57 (c)(3) and (d)(2); 61.58 (e); 61.64(e)(3); 61.65(e)(2), and (g) (1) and (3); 61.67 (c)(4) and (d)(2); 61.158(d)(1); 61.191(d); and 61.197(e).

Description of Relief Sought/ Disposition: To permit the petitioner to use FAA-approved simulators to meet certain flight experience requirements of part 61. *Grant, August 30, 1996, Exemption No. 5493B.*

Docket No.: 26869.

Petitioner: Practical Flight Systems, Inc.

Sections of the FAR Affected: 14 CFR 61.55(b)(3); 61.56(h) (1), (2), and (3); 61.57 (c)(3) and (d)(2); 61.58(e); 61.64(e)(3); 61.65 (e)(2), and (g)(1) and (3); 61.67 (c)(4) and (d)(2); 61.158(d)(1); 61.191(d); and 61.197(e).

Description of Relief Sought/ Disposition: To allow the petitioner to use FAA-approved simulators to meet certain flight experience requirements of part 61. *Grant, August 30, 1996, Exemption No. 5497B.*

Docket No.: 26897.

Petitioner: Northwest Aerospace Training Corporation.

Sections of the FAR Affected: 14 CFR 61.55(b)(3); 61.56(h) (1), (2), and (3); 61.57 (c)(3) and (d)(2); 61.58(e); 61.64(e)(3); 61.65 (e)(2), and (g)(1) and (3); 61.67 (c)(4) and (d)(2); 61.158(d)(1); 61.191(d); and 61.197(e).

Description of Relief Sought/ Disposition: To allow the petitioner to use FAA-approved simulators to meet certain flight experience requirements of part 61. *Grant, August 30, 1996, Exemption No. 5338C.*

Docket No.: 27007.

Petitioner: Air Transport Association of America (ATA).

Sections of the FAR Affected: 14 CFR 121.311(b).

Description of Relief Sought/ Disposition: To permit ATA-member airlines and other similarly situated part 121 operators to permit those qualified flight attendants not required by § 121.391(c) to perform duties related to the safety of the airplane and its occupants during aircraft movement on the surface. *Grant, August 26, 1996, Exemption No. 5533B.*

Docket No.: 27207.

Petitioner: Universal West Indies, S.A.R.L. Trading Company.

Sections of the FAR Affected: 14 CFR 91.9(a).

Description of Relief Sought/ Disposition: To allow Universal West Indies to operate its own DC–6A cargo airplane (Registration No. N4163Q, Serial No. 43681) at increased zero fuel weights and landing weights. *Denial, August 26, 1996, Exemption No. 6499.*

Docket No.: 27712.

Petitioner: American Airlines Flight Academy.

Sections of the FAR Affected: 14 CFR 61.57(e); 121.401(c), 121.433(c)(1)(iii), 121.440(a), 121.441 (a)(1) and (b)(1), Appendix F to part 121, and Special Federal Aviation Regulation (SFAR) No. 58, paragraph 6(b)(3)(ii)(A).

Description of Relief Sought/ Disposition: To allow American Airlines Flight Academy to: (1) Combine recurrent flight and ground training and proficiency checks for American's flight crewmembers in a single annual training and proficiency evaluation program, and (2) meet the line-check requirements of § 121.440(a) and SFAR No. 58 through an alternative line-check program. *Grant, August 26, 1996, Exemption No. 5950A.*

Docket No.: 28211.

Petitioner: Milton J. Songy.

Sections of the FAR Affected: 14 CFR 121.383(c).

Description of Relief Sought/ Disposition: To permit the petitioner to

act as a pilot in operations conducted under part 121 after his 60th birthday. *Denial, August 30, 1996, Exemption No. 6502.*

Docket No.: 28465.

Petitioner: Comair Aviation Academy, Inc.

Sections of the FAR Affected: 14 CFR 141.15.

Description of Relief Sought/Disposition: To allow Comair to operate an FAA-approved part 141 satellite base in Taipei, Taiwan, offering interested U.S. citizens and others in Taiwan the opportunity to attend an FAA-approved part 141 private pilot ground training course. *Denial, August 30, 1996, Exemption No. 6444.*

Docket No.: 28486.

Petitioner: Zero-Gravity Corporation.

Sections of the FAR Affected: 14 CFR 91.303 and 91.307(c).

Description of Relief Sought/Disposition: To allow Zero-Gravity to conduct: (1) parabolic flights without meeting the limitations on aerobatic flights specified in § 91.303, and (2) certain flight maneuvers that exceed the limitations specified in § 91.307(c), without requiring aircraft occupants to wear an approved parachute. *Denial, August 29, 1996, Exemption No. 6501.*

Docket No.: 28543.

Petitioner: Bombardier Inc., Canadair.

Sections of the FAR Affected: 14 CFR 25.562.

Description of Relief Sought/Disposition: To relieve the petitioner of the requirement to show compliance with the provisions of § 25.562 which require that each seat approved for crew or passenger occupancy during takeoff and landing must be designed to withstand dynamic test conditions and the requirement to perform dynamic tests on the seat and restraint system for all aircraft having Amendment 25–64 as their certification basis. *Denial, September 9, 1996, Exemption No. 6506.*

Docket No.: 28580.

Petitioner: Alfred Flores, Ronald Miller, and Robert Mora.

Sections of the FAR Affected: 14 CFR 65.71(a)(2).

Description of Relief Sought/Disposition: To allow these individuals, who are hearing impaired, to be eligible for a mechanic certificate with associated ratings, specifically airframe and powerplant (A&P) ratings. *Grant, August 30, 1996, Exemption No. 6503.*

Docket No.: 28606.

Petitioner: Petroleum Helicopters, Inc.

Sections of the FAR Affected: 14 CFR 135.167(b)(3) (xvi), (xviii), and (xix).

Description of Relief Sought/Disposition: To permit the petitioner to conduct helicopter extended overwater operations in the Gulf of Mexico without carrying certain emergency equipment in the life raft in the helicopter. *Denial, August 26, 1996, Exemption No. 6500.*

[FR Doc. 96–25543 Filed 10–3–96; 8:45 am]

BILLING CODE 4910–13–M

Federal Highway Administration

Environmental Impact Statement: Johnson County, Kansas; Jackson County, Missouri; Cass County, Missouri

AGENCY: Federal Highway Administration (FHWA), DOT.

ACTION: Notice of Intent Cancellation.

SUMMARY: The FHWA is issuing this notice to advise the public that a Notice of Intent (NOI) to prepare an Environmental Impact Statement (EIS) for a proposed highway project located in Johnson County, Kansas, Cass County, Missouri, and Jackson County, Missouri is cancelled. The NOI was originally published in the Federal Register on June 7, 1993. The cancellation is based on a decision not to proceed with the project at this time.

FOR FURTHER INFORMATION CONTACT:

Johnny R. Dahl, Operations Engineer, FHWA, 3300 South Topeka Boulevard, Suite 1, Topeka, Kansas 66611–2237, Telephone: (913) 267–7284

Donald L. Neuman, Programs Engineer, FHWA, P.O. Box 1787, Jefferson City, Missouri 65102, Telephone: (314) 636–7104

Warren Sick, P.E., Chief of Bureau of Design, Kansas Department of Transportation, Docking State Office Building, Topeka, Kansas 66612, Telephone: (913) 296–3525

Bob Sfreddo, Division Engineer—Design, Missouri Highway and Transportation Department, P.O. Box 270, Jefferson City, Missouri 65102, Telephone: (314) 751–2876

James F. Philley, P.E., Johnson County Engineer, 1800 West 56 Highway, Olathe, Kansas 66061, Telephone: (913) 782–2640.

SUPPLEMENTARY INFORMATION: The 21st Century Corridor Major Investment and Environmental Impact Study (MIS/EIS) was a joint effort to examine future transportation capacity needs in northwestern, western and southern Johnson County, Kansas and northwestern Cass County, Missouri. In 1995, the Johnson County Commission voted to withdraw its support and sponsorship of the 21st Century Corridor MIS/EIS, after which the Missouri Highway and Transportation Department (now the Missouri Department of Transportation) also withdrew its support and sponsorship. Both project sponsors have directed staff to bring closure to the study effort.

The MIS/EIS documentation compiled to date for the proposed 21st Century Corridor will become a resource document and will not be considered a completed study document. There is agreement that there will be future needs for improved north/south and east/west transportation movement in the subject corridor. Comments and questions concerning this proposed action and the EIS should be directed to the FHWA, Johnson County, or the Kansas Department of Transportation at the addresses provided.

Issued on: September 24, 1996.

David R. Geiger,

Division Administrator, Kansas Division, Federal Highway Administration.

[FR Doc. 96–25444 Filed 10–3–96; 8:45 am]

BILLING CODE 4910–22–M

Surface Transportation Board [1]

[STB Finance Docket No. 33051]

Fay Penn Industrial Development Corporation—Acquisition Exemption—CSX Transportation, Inc.

[STB Finance Docket No. 33051 (Sub-No. 1)]

Southwest Pennsylvania Railroad Company—Operation Exemption—CSX Transportation, Inc.

Fay Penn Industrial Development Corporation (Fay Penn IDC) and Southwest Pennsylvania Railroad Company (Southwest) have filed a joint notice of exemption under 49 CFR 1150.41: (1) For Fay Penn IDC to acquire and for Southwest to operate a total of approximately 26.80 miles of rail line owned by CSX Transportation, Inc. (CSXT); and (2) for Southwest to acquire a total of approximately 4 miles of incidental trackage rights from CSXT. The lines are located in the Commonwealth of Pennsylvania. Consummation was expected to occur on or after September 13, 1996.

The acquisition and operation involve lines operated by CSXT between a point

[1] The ICC Termination Act of 1995, Pub. L. No. 104–88, 109 Stat. 803, which was enacted on December 29, 1995, and took effect on January 1, 1996, abolished the Interstate Commerce Commission and transferred certain functions to the Surface Transportation Board (Board). This notice relates to functions that are subject to Board jurisdiction pursuant to 49 U.S.C. 10902.

at M.P.B.T. 59.4 at Greene Junction and a point at M.P.B.T. 73.0 near Uniontown, and abandonment tracks of CSXT between a point near M.P.B.T. 73.0 and a point at M.P.B.T. 81.0 in Smithfield, together with the related branch lines, described as follows: a 21.67-mile right-of-way situated between Greene Junction (Rail Valuation Station 4+06.3) and Smithfield (Rail Valuation Station 1148+43.8), including Bo West Yard; the Smithfield & Masontown Branch adjacent to the rail corridor described immediately above; a 2.26-mile portion of the right-of-way known as the South West Branch in Uniontown between Rail Valuation Stations 1926+00 and 2045+45; a 0.27-mile portion of the South West Branch in Fairchance between Rail Valuation Stations 2271+39 and 2285+55; a 0.66-mile right-of-way known as the Redstone Branch in Uniontown between Rail Valuation Stations 874+34 and 839+30; a 0.33-mile portion of the right-of-way known as the Coal Lick Branch in Uniontown between Rail Valuation Stations 3+90 and 21+40; and, a 1.61-mile portion of the right-of-way known as the Fairchance Branch in Fairchance between Rail Valuation Stations 2+10 and 87+20.

The incidental trackage rights involve approximately 4 miles of line between Broad Ford and Greene Junction, including rights via various lead tracks and yard tracks within Connellsville Yard.

If the notice contains false or misleading information, the exemption is void *ab initio*. Petitions to revoke the exemption under 49 U.S.C. 10502(d) may be filed at any time.

The filing of a petition to revoke will not automatically stay the transaction.

An original and 10 copies of all pleadings, referring to STB Finance Docket No. 33051 and STB Finance Docket No. 33051 (Sub-No. 1), must be filed with the Surface Transportation Board, Office of the Secretary, Case Control Branch, 1201 Constitution Avenue, N.W., Washington, DC 20423 and served on applicants' representatives: Richard R. Wilson, Esq., Vuono & Gray, 2310 Grant Building, Pittsburgh, PA 15219; and Keith G. O'Brien, Esq., Rea Cross & Auchincloss, Suite 420, 1920 N Street, N.W., Washington, DC 20036.

Decided: September 27, 1996.

By the Board, David M. Konschnik, Director, Office of Proceedings.

Vernon A. Williams,

Secretary.

[FR Doc. 96–25514 Filed 10–3–96; 8:45 am]

BILLING CODE 4915–00–P

UNITED STATES ENRICHMENT CORPORATION

Sunshine Act Meeting

AGENCY: United States Enrichment Corporation Board of Directors.

TIME AND DATE: 8:30 a.m., Tuesday, October 8, 1996.

PLACE: USEC Corporate Headquarters, 6903 Rockledge Drive, Bethesda, Maryland 20817.

STATUS: The Board meeting will be closed to the public.

MATTER TO BE CONSIDERED:

- Review of commercial and financial issues of the Corporation.

CONTACT PERSON FOR MORE INFORMATION: Barbara Arnold 301–564–3354.

Dated: October 2, 1996.

William H. Timbers, Jr.,

President and Chief Executive Officer.

[FR Doc. 96–25662 Filed 10–2–96; 2:08 pm]

BILLING CODE 8720–01–M

UNITED STATES INFORMATION AGENCY

Culturally Significant Objects Imported for Exhibition; Determinations

Notice is hereby given of the following determinations: Pursuant to the authority vested in me by the Act of October 19, 1965 (79 Stat. 985, 22 U.S.C. 2459), Executive Order 12047 of March 27, 1978 (43 FR 13359, March 29, 1978), and Delegation Order No. 85–5 of June 27, 1985 (50 FR 27393, July 2, 1985), I hereby determine that the objects to be included in the exhibit, ''The Life of a Patron: Zhou Lianggong and the Painters of Seventeenth Century China'' (See list [1]), imported from abroad for the temporary exhibition without profit within the United States, are of cultural significance. These objects are imported pursuant to a loan agreement with the foreign lenders. I also determine that the exhibition or display of the listed exhibit objects at the China Institute Gallery, New York from on or about October 22, 1996 through December 21, 1996, is in the national interest. Public Notice of these determinations are ordered to be published in the Federal Register.

Dated: September 30, 1996.

Les Jin,

General Counsel.

[FR Doc. 96–25530 Filed 10–3–96; 8:45 am]

BILLING CODE 8230–01–M

[1] A copy of this list may be obtained by contacting Ms. Neila Sheahan, Assistant General Counsel, at 202/619–5030, and the address is Room 700, U.S. Information Agency, 301 4th Street, SW, Washington, DC 20547–0001.

federal register

Friday
October 4, 1996

Part II

Environmental Protection Agency

40 CFR Parts 89, 90, and 91

Air Pollution Control; Gasoline Spark-Ignition Marine Engines; New Nonroad Compression-Ignition and Spark-Ignition Engines, Exemptions; Rule

ENVIRONMENTAL PROTECTION AGENCY

40 CFR Parts 89, 90, and 91

[FRL–5548–8]

RIN 2060–AE54

Control of Air Pollution; Final Rule for New Gasoline Spark-Ignition Marine Engines; Exemptions for New Nonroad Compression-Ignition Engines at or Above 37 Kilowatts and New Nonroad Spark-Ignition Engines at or Below 19 Kilowatts

AGENCY: Environmental Protection Agency (EPA).

ACTION: Final rule.

SUMMARY: As directed under section 213 of the Clean Air Act as amended in 1990 (CAA), EPA is regulating exhaust emissions from new spark-ignition (SI) gasoline marine engines (including outboard engines, personal watercraft engines, and jet boat engines) because exhaust emissions from SI gasoline marine engines cause or contribute to ozone concentrations in more than one ozone nonattainment area. Once the program is fully implemented, manufacturers of these engines must demonstrate to EPA that hydrocarbon emissions are reduced, by 75% from present levels, by testing engines representative of the product line before sale and after use. The result of these regulations will be a new generation of cleaner gasoline marine engines available to boaters.

EPA is also revising existing regulations for new nonroad CI engines at or above 37 kW and new nonroad SI engines at or below 19 kW so as to include exemptions comparable to exemptions provided to highway engines.

DATES: This regulation is effective December 3, 1996. The reference of certain publications listed in the regulations is approved by the Director of the Federal Register as of December 3, 1996. The information collection requirements contained in 40 CFR Part 91 have not been approved by the Office of Management (OMB) and are not effective until OMB has approved them. EPA will publish a document in the Federal Register announcing the effective date.

A public workshop for manufacturers who must comply with this regulation will be held on November 13, 1996 beginning at 10 a.m.

ADDRESSES: For information or compliance assistance, manufacturers who must comply with this regulation may contact the Office of Mobile Sources, Engine Programs and Compliance Division, Engine Compliance Programs Group, 501 3rd Street, Washington, DC 20005. The public workshop will be held at 501 3rd Street, Washington, DC 20005.

Materials relevant to this rulemaking are contained in a docket at the following address: EPA Air Docket (LE–131), Attention: Docket Number A–92–28, room M–1500, 401 M Street, SW., Washington, DC 20460. Materials contained in this docket may be reviewed at this location from 8:00 a.m. until noon and from 1:30 p.m. until 3:30 p.m. Monday through Friday. As provided in 40 CFR part 2, a reasonable fee may be charged by EPA for photocopying.

FOR FURTHER INFORMATION CONTACT: Deanne R. North, Office of Mobile Sources, Engine Programs and Compliance Division, at (313) 668–4283 or James A. Blubaugh, Office of Mobile Sources, Engine Programs and Compliance Division, (202) 233–9244.

SUPPLEMENTARY INFORMATION:

I. Regulated Entities

Entities potentially regulated by this action are those which manufacture SI gasoline marine engines. Regulated categories and entities include:

Category	Examples of regulated entities
Industry	Outboard engine manufacturers, personal watercraft engine manufacturers, jetboat engine manufacturers

This table is not intended to be exhaustive, but rather provides a guide for readers regarding entities likely to be regulated by this action. This table lists the types of entities that EPA is now aware could potentially be regulated by this action. Other types of entities not listed in the table could also be regulated. To determine whether your product is regulated by this action, you should carefully examine the applicability criteria in § 91.1 of title 40 of the Code of Federal Regulations. If you have questions regarding the applicability of this action to a particular product, consult the person listed in the preceding **FOR FURTHER INFORMATION CONTACT** section.

II. Obtaining Copies of Documents

This preamble, the final regulatory language, the Summary and Analysis of Comments, and the Regulatory Impact Analysis are also available electronically on the Technology Transfer Network (TTN), which is an electronic bulletin board system (BBS) operated by EPA's Office of Air Quality Planning and Standards. The service is free of charge, except for the cost of the phone call. Users are able to access and download TTN files on their first call using a personal computer and modem per the following information.

TTN BBS: 919–541–5742 (1200–14400 bps, no parity, 8 data bits, 1 stop bit) Voice Helpline: 919–541–5384

Also accessible via Internet: TELNET ttnbbs.rtpnc.epa.gov Off-line: Mondays from 8:00 a.m. to 12:00 Noon ET

A user who has not called TTN previously will first be required to answer some basic informational questions for registration purposes. After completing the registration process, proceed through the following menu choices from the Top Menu to access information on this rulemaking.

<T> GATEWAY TO TTN TECHNICAL AREAS (Bulletin Boards)
<M> OMS—Mobile Sources Information
<K> Rulemaking & Reporting
<6> Non-Road
<1> File area #1. Non-Road Marine Engines

At this point, the system will list all available files in the chosen category in chronological order with brief descriptions. To download a file, select a transfer protocol that is supported by the terminal software on your own computer, then set your own software to receive the file using that same protocol.

If unfamiliar with handling compressed (that is, ZIP'ed) files, go to the TTN top menu, System Utilities (Command: 1) for information and the necessary program to download in order to unZIP the files of interest after downloading to your computer. After getting the files you want onto your computer, you can quit the TTN BBS with the <G>oodbye command.

Please note that due to differences between the software used to develop the document and the software into which the document may be downloaded, changes in format, page length, etc. may occur.

III. Contents

IV. Statutory Authority and Background
A. Statutory Authority
B. Background
V. Requirements of the Final Rule—Overview
A. Outboards and Personal Watercraft, and Jetboat Engines
B. Emission Standards
C. Administrative Programs
1. Pre-production Certification
i. Beginning of Emission Standard Phase-in
ii. Stabilization of Certification Program
2. Production Line Testing and Compliance
3. In-Use Testing and Remediation
i. In-Use Testing Program

ii. In-Use Credit Program
iii. Recall Provisions
4. Consumer Warranty on Emission Components
5. Manufacturer Reporting of Engines with Emission effects and Voluntary Emission Recalls
6. Tampering with Emission Components
7. Engines Excluded or Exempted from Regulations
8. Prohibition on Importation of Uncertified Engines into the United States
9. Revisions to Small SI (40 CFR Part 90) and Large CI (40 CFR Part 89) Regulations—Added Exemptions
VI. Discussion of Issues
A. No Sterndrive or Inboard Emission Standards
B. Outboard/Personal Watercraft (OB/PWC) Emission Standards Meet Statutory Criteria
VII. Regulatory Impact Analysis
VIII. Administrative Requirements
A. Reporting and Recordkeeping Requirements
B. Impact on Small Entities
C. Submission to Congress and the General Accounting Office
D. Executive Order 12866
E. Unfunded Mandates Reform Act of 1995

IV. Statutory Authority and Background

A. Statutory Authority

Authority for the actions set forth in this rule is granted to EPA by sections 203, 204, 205, 206, 207, 208, 213, 215, 216, and 301(a) of the Clean Air Act as amended (42 U.S.C. 7522, 7523, 7524, 7525, 7541, 7542, 7547, 7549, 7550, and 7601(a)).

B. Background

Pursuant to section 213(a) of the Clean Air Act as amended (hereafter, ''CAA''), EPA undertook a study of emissions from nonroad engines and vehicles to determine whether such emissions are significant contributors to ozone or carbon monoxide (CO) concentrations in more than one nonattainment area. A nonattainment area is a specified area that has failed to attain the applicable National Ambient Air Quality Standard (NAAQS) for a given pollutant. Based on the 1991 Nonroad Engine and Vehicle Emission Study (available in the docket) [1], EPA determined that emissions of CO, oxides of nitrogen (NO_X), and volatile organic compounds (VOC) from nonroad engines, equipment, and vehicles do, in fact, contribute significantly to ozone and CO concentrations in more than one NAAQS nonattainment area. This significance determination was finalized on June 17, 1994 (59 FR 31306) and is incorporated by reference into this final rulemaking.

Under section 213(a)(3) of the CAA, EPA is required to regulate those categories or classes of new nonroad engines, equipment, and vehicles that in EPA's judgement cause or contribute to ozone and CO concentrations in more than one nonattainment area. On November 9, 1994, EPA published a Notice of Proposed Rulemaking (NPRM) establishing emission standards for new gasoline spark-ignition (SI) and diesel compression-ignition (CI) marine engines pursuant to section 213(a) of the CAA.[2] On February 7, 1996, EPA published a Supplemental Notice of Proposed Rulemaking (SNPRM).[3] In the course of the comment period for the NPRM, some commenters suggested that EPA consider new approaches to some of the items addressed in the proposal; also, it became apparent that some aspects of the proposed regulation were not addressed in sufficient detail in the NPRM and needed additional development for further comment. The SNPRM sought to address these matters.

EPA has determined that gasoline SI marine engines cause or contribute to ozone concentrations in more than one nonattainment area (See Chapter 3 of the RIA). EPA is finalizing emission standards today for gasoline SI marine engines. For gasoline marine engines, the primary pollutants affected by this rule are hydrocarbons (HC), which are a primary component of VOCs. EPA is deferring finalization of emission standards for diesel CI marine engines until a later rulemaking.

The gasoline SI marine engine HC emission standards should decrease HC emissions from such engines by approximately 75 percent from projected baseline emission levels by the year 2025. Due to the long lives of a small portion of marine engines, EPA does not anticipate that complete fleet turnover will occur until around the year 2050.

V. Requirements of the Final Rule—Overview

Beginning in 1998, manufacturers of brand new SI gasoline marine engines used in outboards, personal watercraft, and jetboats must comply with this rule. This rule does not regulate in any way boat engines which already are in use.

Today's rule imposes different requirements for the subcategory of outboard, personal watercraft and jetboat (OB/PWC) engines than for the subcategory of sterndrive and inboard engines (SD/Is). Outboards, personal watercraft, and jetboat engines are the engines that EPA is most concerned about from the standpoint of pollution because they currently utilize, for the most part, 2-stroke technology that emits high rates of HC exhaust emissions. Current, unregulated, SD/Is are far cleaner than OB/PWC. The result of this regulation will be that OB/PWC engines will be dramatically cleaner: They will be near the lower emission levels exhibited by today's SD/I engines. By imposing emission standards on only OB/PWC engines, EPA will achieve the greatest degree of emissions reduction achievable from new gasoline SI marine engines as a whole through the application of technology, taking cost (including cost to boaters) and other factors into account. See 42 U.S.C. 7545(a)(3). Further discussion of EPA's rationale for not regulating SD/I engines is provided in Section V below.

The engine technology changes resulting from this regulation will be profound. The new generation of OB/PWC engine technology will not only be more environmentally friendly, but will provide boaters with many performance advantages. First, and most important for the environment, the new generation of OB/PWC engines will be much cleaner. However, the engines will also be easier to start, have improved performance, faster acceleration, and less noise. Boaters will realize hundreds of dollars in fuel savings due to significant fuel economy improvements. With the new fuel systems and engine designs, the hassle of mixing fuel and oil will be gone. As an added benefit to the boat owner, the emissions performance of the new generation of marine engines will be guaranteed by a three year or 200 hour warranty. These points are outlined below in Table 1.

TABLE 1.—BENEFITS OF NEW TECHNOLOGY OB/PWC MARINE ENGINES

Less pollution	Stringent exhaust emission standards, cleaner exhaust.
Higher Performance	Easier to start engine, better throttle response, smoother idling, and faster and smoother acceleration.

[1] EPA Publication Number 211A–2001 (November, 1991).

[2] 59 FR 55930 (November 9, 1994).

[3] 61 FR 4600 (Feb. 7, 1996).

TABLE 1.—BENEFITS OF NEW TECHNOLOGY OB/PWC MARINE ENGINES—Continued

Better Fuel Economy	Boaters will use over 30% less fuel for the same amount of boating.
A Better Boating Experience	Less blue smoke, less smelly fumes, and less noise.
Less Hassle Refueling	Eliminates the hassle of measuring or guessing the proper amount of oil when refueling, no pre-mixing fuel and oil.

Provided below is an overview of the major program elements of the gasoline marine engine rule finalized today. For a full discussion of the significant comments received on this rulemaking and EPA's reasons for finalizing the rule as set forth today, the reader should refer to the Summary and Analysis of Comments document available in the docket.

A. Outboard, Personal Watercraft, and Jetboat Engines

Outboards and personal watercraft (i.e., Jet Skis, Wave Runners, etc.) are defined in 40 CFR 91.3. For purposes of this rulemaking, jetboats are considered personal watercrafts and are subject to the pollution control requirements outlined here for OB/PWC unless derived from sterndrive and inboard type marinized automotive blocks. The Administrator may designate a jetboat engine to be a sterndrive or inboard type of engine if the engine is comparable in technology and emissions to an inboard or sterndrive engine.

B. Emission Standards

The emission standards finalized today for outboards, personal watercraft, and jetboats require a very large reduction in hydrocarbon emissions on a brake specific basis (i.e., g/kw-hr) with only a slight increase in NO_X emissions. The standards vary by rated power and apply to a manufacturer's entire fleet. The standards require increasingly stringent HC control over the course of a nine-year phase-in period beginning in model year 1998. By the end of the phase-in, each manufacturer must meet an HC+NO_X emission standard on a corporate average basis that represents a 75 percent reduction in HC compared to unregulated levels. EPA's administrative program requirements are designed to ensure that the targeted reductions actually occur by making manufacturers responsible for testing engines, reporting the results to EPA, and demonstrating compliance with the emission standards. The administrative program requirements are described below in section C.

Corporate average standard: The gasoline marine emission standard finalized today is an average emission standard meaning that the manufacturer's product line of outboards and personal watercraft must comply with the emission standards on a corporate average basis. The corporate average emission standard structure helps to make the standard technologically achievable by offering manufacturers flexibility in achieving the HC reductions required. Further, the structure minimizes cost by allowing the manufacturers and the market to determine the best way to achieve the targeted reductions over time. EPA sets the standards that apply to the engines in the manufacturer's new sales fleet, which in effect sets the required reduction in the manufacturer's corporate average emission level. The manufacturer determines on its own what type of control technology to apply to which engines. This flexibility is essential because the emission standard will require revolutionary technology that does not currently exist across the product line, the leadtime for implementation is short, and targeted reductions across the phase-in are large. Additionally, uncertainty exists regarding the viability and durability of control technology because prototypes have not yet been designed for many current engine models. Averaging means that an engine family in a manufacturer's product line could be certified to an emissions level in excess of the applicable emission standard, so long as its excess emissions are offset by an engine family that is certifed to an emissions level below the applicable emission standard. In other words, any emissions in excess of the average emission standard must be balanced by emissions lower than the average emission standard.

Full actual life emissions are taken into account when calculating this balance. The calculation includes:

- The difference between the applicable emission standard and the engine family emission limit (FEL),
- Sales in the applicable model year,
- Average annual use in hours,
- The power output of the engine family,
- The future survival probability of each engine,
- The net present value of the credits over time.

If a FEL is above the applicable emission standard, then the engine family is generating negative credits. Conversely, if the FEL is below the applicable emission standard then the engine family is generating positive credits. After the negative and positive credits are added up across the manufacturer's product line, the manufacturer must have a net positive or zero emission credit balance.

Nine-year phase-in: The applicable emission standards are phased-in beginning in the 1998 model year and fully implemented in the 2006 model year. A phase-in of the emission standard is necessary to help make the standard technologically achievable. For example, a manufacturer may gradually phase-in new technology accross its product line instead of changing all of its product line in a single year. This allows the manufacturer needed flexibility to apply the unproven control techonology in a systematic way, given concerns regarding control technology viability and durability. The applicable emission standard for each year of the phase-in is calculated in reference to a baseline curve which describes, on average, the current emission rates of the entire power output range (e.g., 2 horsepower to 300 horsepower) of unregulated OB/PWC engines. EPA's standard structure requires manufacturers to reduce brake specific (i.e., g/kw-hr) HC emissions by at least 75 percent in 2006, the final year of the phase-in.

HC+NO_X emission standard: The numerical values of the applicable emission standards are described in detail below and in section 91.207 of the regulatory text. As proposed in the SNPRM, EPA is finalizing an HC+NO_X average emission standard which retains the 75 percent reduction in HC emissions and the 6.0 g/kw-hr NO_X level in 2006 and later years proposed in the NPRM. This standard will take the form of an HC+NO_X function that becomes more stringent each year for a nine year phase-in period. This function results from reducing baseline HC emissions to at most 25 percent of the uncontrolled level while allowing an increase of NO_X from 2.0 to 6.0 g/kw-hr incrementally over nine years. Some NO_X increase is technologically inevitable if HC reductions of 75 percent or more are to be achieved. The expected increase in total NO_X emissions from these engines is small compared to the large HC inventory reductions.

The following formulas and tables summarize the $HC+NO_X$ emission standard for each rated power of the engine family as finalized for OB/PWC:

$$HC_{base} = \left(151 + \frac{557}{p^{0.9}}\right) \text{ or } 300 \text{ g/kw-hr, whichever is lower, where:}$$

HC_{base}=hydrocarbon base average level in g/kw-hr

P=rated power of the engine family in kilowatt (kw).

$$NO_{X_{base}} = 2.0 \text{ g/kw-hr, where:}$$

NO_Xbase=oxides of nitrogen base average level

To determine the $HC+NO_X$ level for the base year, HC_{base} and NO_{Xbase} are added. HC and NO_X are both changed to their final year level in equal increments. To calculate the $HC+NO_X$ standard for a given model year and rated power, use Table 2 and the following equation:

$$HC + NO_X = A \times \left(151 + \frac{557}{p^{0.9}}\right) + B, \text{ or } HC + NO_x = C, \text{ whichever is lower, where:}$$

$HC+NO_X$=emission standard in a given model year in g/kw-hr

A=hydrocarbon reduction factor based in a given model year.

B=NO_X level factor in a given model year

C=maximum $HC+NO_X$ average, in g/kw-hr, in a given model year

TABLE 2.—OB/PWC ENGINES

[Factors for calculation of $HC+NO_X$ emission standard]

Model year	A	B	C
1998	0.917	2.44	278
1999	0.833	2.89	253
2000	0.750	3.33	228
2001	0.667	3.78	204
2002	0.583	4.22	179
2003	0.500	4.67	155
2004	0.417	5.11	130
2005	0.333	5.56	105
2006 and after	0.250	6.00	81

The $HC+NO_X$ standard for PWC does not go into effect until 1999. At this time, PWC engines will be required to meet the same standard as OB engines. Initially, OB and PWC are in separate averaging sets; however, beginning in 2001, OB and PWC enter the same averaging set.

No carbon monoxide standard: EPA is not finalizing the carbon monoxide (CO) cap, proposed in the NPRM, of 400 g/kw-hr for OB/PWC gasoline marine engines. See the Summary and Analysis of Comments for a discussion of this issue.

C. Administrative Programs

In recognition of the unique nature of the marine industry, EPA is finalizing some innovative administrative programs for OB/PWC. EPA believes the OB/PWC programs introduced here are appropriately designed for OB/PWC compliance demonstration because of the market structure and smaller size of the marine engine industry and the nature of the technology used.

EPA has taken a cradle-to-grave approach to the emission performance of the manufacturer's product line. EPA's goal is to promote high quality engine design, production, and in-use emission performance through a system of manufacturer based testing programs. These innovative compliance programs will encourage the gain and use of emission information, allowing the manufacturer and EPA to better understand the emissions of an engine family. EPA wants the manufacturers to quickly climb the learning curve with respect to the emissions performance of their engines. This approach uses a cycle of evaluation, learning, and incorporation of information on emission characteristics to promote the production of high quality marine engines that achieve significant reductions in emissions throughout their useful lives.

The individual elements of the compliance program are described below. These individual elements are interactive. For example, the certification program entails estimation by the manufacturer of the emission performance of the engine family once it is in production and throughout its useful life. The production line testing program provides information to the manufacturer, prior to introduction of the engine into commerce, on how well the manufacturer is producing the engine from an emission perspective. It is in essence a quality control program which encourages the manufacturer to develop accurate emission estimates for certification and make corrections to the certification data when the previous estimates were found to be in error or to take action on its own to keep the emission quality within limits, such as the institution of appropriate production line changes. When the manufacturer cannot make production line changes, the manufacturer may change the engine family emission limit (FEL) so long as the manufacturer can maintain corporate average compliance with the emission standards.

Additionally, the in-use testing program provides significant information on how well the emission quality of the engines is holding up in actual use. If an engine family's emissions are higher and worse on average than its FEL, EPA allows the manufacturer to balance those exceedances with credits from other engine families that had better in-use emission performance on average than their respective FELs.

The gasoline marine administrative programs focus on incentives toward compliance, flexibilities to achieve targeted reductions, and the spread of

knowledge to facilitate emission quality improvements. By offereing these incentive, flexibilities, and knowledge, the programs outlined above, and other details described below, allow gasoline marine engines to achieve dramatic HC reductions through substantial engine changes while minimizing cost. Additionally, EPA has carefully constructed the requirements to minimize the information collection requirements. The information required elicits only the amount of information that would be useful to the manufacturers in producing high quality emission performance, and is complete enough to assist EPA in performing its responsibilities to monitor and enforce compliance to the requirements of this rule. To facilitate evaluation of this information, EPA is developing an interactive, computer-based compliance monitoring system that will take advantage of the latest technology available to lower compliance monitoring costs for both the manufacturers and EPA.

EPA expects that the administrative programs for gasoline marine engines finalized here will work well and ensure compliance, that manufacturers will pursue compliance in good faith, and that the environment benefits in accordance with the targeted reductions. However, these programs are innovative and are unproven and may not on their own ensure such results, EPA is maintaining backstop measures such as selective enforcement auditing and mandatory recall. EPA hopes that circumstances do not arise that would warrant imposing these backstop measures.

1. Pre-Production Certification

Under sections 203, 206, and 213 of the CAA, all gasoline marine engine families must be certified by EPA as meeting applicable emission standards before they are introduced into commerce (42 U.S.C. 7522(a)(1), 7525(a)(1), 7547(d)). In order to meet this requirement, manufacturers must submit an Application for Certification that identifies the engine family emission limit (i.e., FEL). If the engine family conforms to the applicable requirements, EPA issues a certificate of conformity. This certificate of conformity allows the manufacturer to introduce the engine family into commerce.

Compliance is on a corporate average basis as explained above in section B with respect to the emission standards. Therefore, at the end of the model year, the manufacturer must have a net positive or zero emission credit balance to be in compliance. In addition, each engine family must comply with its certification FEL. If the manufacturer is not in compliance, EPA is authorized under sections 206(b) and 213(d) to suspend or revoke the applicable certificates of conformity.

As this regulation is somewhat unique with respect to the emission standards and the way in which they are phased-in, EPA is finalizing some flexibilities for manufacturers during the early years of the phase in of emission standards to help manufacturers convert to the new emission control technology as soon as possible while minimizing cost. Some unique aspects include phasing in the emission standard by targeted percentage emission reduction targets and requiring the entire product line to be included in the average during the phase-in. EPA believes that focusing the manufacturers investments on the new technology that will be introduced, rather than on existing technology that will be phased out of production anyway, will promote greater emissions reductions over time. Also, some flexibilities add extra incentive toward earlier than required reductions (e.g., early banking). As the phase in progresses, however, these flexibilities cease so that there is not an inadvertant incentive toward the continuing production of the higher emitting existing technology. As the program is phased-in, some requirements are brought in to strengthen the overall corporate average and ensure the numerical integrity of the reduction targets, for example, by requiring test results rather than the baseline curve to identify existing technology FELs. At the end of the phase-in, it is important that all engine families have equivalent requirements so as to ensure that the cleanest technology is promoted. The compliance flexibilities for the early years of the program are described below.

i. Beginning of Emission Standard Phase-In

Several important flexbilities and provisions exist in the beginning of the emission standard phase-in period, as follows.

Averaging sets: EPA is separating the averaging sets in the beginning of the emission standard phase-in but is finalizing a single averaging set for model year 2001 and later. EPA thinks the flexibility afforded by a single averaging set will greatly facilitate the most cost-effective emission reductions over the phase-in period.

The averaging sets for personal watercraft and outboards are split for the first three years of the phase-in. In other words, EPA is restricting the use of any positive personal watercraft credits being used to offset negative outboard engine credits and vice versa before the model year 2001. This initial split in the averaging sets will assure that in the early years of the program, control technology is being applied to both personal watercraft and outboard engines.

If the sets were not split, the possibility would exist that control could be disproportionately applied to one type of engine over the other across the market. Some manufacturers have expressed support for split sets in the early years of the program because they are concerned with potential negative competitive effects of disproportionate application of control technology. EPA is more concerned with maintaining a single averaging set for OB/PWC in the long term because it promotes economic efficiency and will minimize consumer cost in achieving the significant HC reductions contemplated in this rule.

Therefore, the early years of split ABT sets assures that control technology is applied to both types of engines and mitigates some manufacturers' concern over anti-competitive effects. Yet, limiting this restriction to only the first few years of the program assures that in the long run the market is encouraged to take advantage of the most cost-effective emission reductions across the new sales fleet.

Early banking: The early banking flexibility allows manufacturers to certify their entire product line before the implementation date of this rule. The manufacturers would then receive a portion of their emissions reductions as banked credits to be used in future years. This flexibility allows manufacturers to ease their transition into meeting tighter emission standards over time. Most importantly, EPA achieves an air quality benefit that would not have otherwise been achieved because a portion of the credits generated for environmental benefit is retained. The value of the banked credits provides an incentive for manufacturers to introduce clean technology earlier than required.

EPA will allow engines in the outboard averaging set to potentially earn credits for model year 1997. To generate credits, a manufacturer must meet the 1998 model year emission $HC+NO_X$ reduction target on a corporate average basis. If the manufacturer meets the 1998 model year emission reduction target (i.e., 8.3% corporate average reduction), the manufacturer may bank any credits in excess of half the 1998 model year target (i.e., credits may be banked in excess of a 4.15% corporate reduction target).

EPA will allow engines in the personal watercraft averaging set to potentially earn credits for model years 1997 and 1998. Although personal watercraft are not required to attain reductions until the 1999 model year, EPA is finalizing early banking provisions because EPA thinks extra flexibility is needed when the standards are first implemented to facilitate adoption of control technology, due to the additional packaging constraints that personal watercraft manufacturers must address. In keeping with the policy for outboard early banking credits, if the manufacturer meets the 1998 model year emission reduction target (i.e., 8.3% corporate average reduction), the manufacturer may bank any credits in excess of half the 1998 model year target (i.e., credits may be banked in excess of a 4.15% corporate reduction target).

In addition, for model year 1997, EPA will allow PWC manufacturers to bank any credits in excess of half the 1998 model year reduction target (i.e., credits may be banked in excess of a 4.15% corporate average reduction target). However, for 1997, PWC manufacturers do not have to meet the 8.3% reduction target. EPA is relaxing this aspect for 1997 model year PWC early banking because EPA thinks it will be signficantly more difficult for PWC manufacturers to apply control technology in 1997 due to packaging constraints. However, outboard manufacturers do not have the same difficulties as PWC manufacturers in applying control technology and therefore are required to exceed a 8.3% corporate reduction to gain 1997 early banking credits.

Multi-year averaging: EPA will allow manufacturers who cannot adequately cover the negative emission credits in their product line for certification either in model year 1998 or 1999 to make up the required reductions by model year 2000. EPA will allow a maximum of 30% of the 1998 model year or 20% of the 1999 model year required reductions for outboards to be made up by the 2000 model year. EPA will allow a maximum of 50% the 1999 model year required reduction for PWC to be made up by the 2000 model year.

As the implementation of these emission standards begins relatively early (i.e., effectively less than one model year after this notice), this flexibility is needed because it will be challenging for the manufacturers to meet the targeted reduction. However, EPA's concern about foregone benefits associated with noncompliance is mitigated because the manufacturers must remediate these foregone benefits in the future. Thus, EPA is allowing a needed flexibility while at the same time ensuring that there are no foregone benefits.

Existing technology flexibilities: Resources in this industry are scarce. Therefore, directing manufacturers investment towards future technologies will promote greater emission reductions overall. The focus of manufacturer investment and effort should be on the design, development, and testing of new, clean technology, rather than on existing, uncontrolled technology that will be eliminated anyway. Therefore, EPA is implementing a simplified certification process for the existing, uncontrolled engines as well as waiving some post-certification requirements. EPA thinks these flexibilities offer the right balance between assuring the manufacturers are achieving the targeted reductions and optimizing investment in the control technology of the future.

''Existing technology'' OB/PWC engine families are considered to be those engines in production for the 1997 or previous model years that do not utilize newer technologies. The simplified certification process for these engines will involve reduced data submission requirements.

Another flexibility concerns the acceptance of alternative test data. In the beginning of the certification program, there will be many existing technology engine families in the manufacturers' product lines. As testing facilities are somewhat limited and manufacturers must begin a concentrated effort to design, certify, produce, and sell new technology engines, EPA will allow manufacturers to use surrogate data (e.g., previous test results or the baseline curve) to estimate the FEL's of existing technology engine families. However, as compliance is on a corporate average basis, it is important that FEL's be adequately estimated in order to ensure the targeted emission reductions are achieved. Therefore, EPA will require that by the end of model year 2000, all engine families have certification quality test results to represent the FEL's. Further, EPA is requiring that manufacturers retroactively apply this data to any existing technology engine families that previously used other data (e.g., previous test results or the baseline curve) in model years 1998, 1999, or 2000 for credit calculation purposes, and by the end of model year 2000 must make up any credit shortfalls that may exist from model year 1998, 1999, and 2000.

Finally, EPA is offering existing technology engines exemptions from the regulations promulgated today for production line testing, selective enforcement auditing, and in-use testing; as well as regulations for emission defect reporting, reporting of voluntary emissions recalls, and warranty provisions (all of these post-certification programs are described below). These flexibilities will be available through the 2003 model year, unless the manufacturers commits to a specific schedule on ceasing production of the existing technology engine family by the end of model year 2005 and EPA approves continued production until then.

ii. Stabilization of Certification Program

Beginning in model year 2001, all engine families must have FELs adequately identified by certification quality test data. Thus, by the end of model year 2000, all existing technology engine families that had FELs based on other data (e.g., previous test results or the baseline curve) must be in compliance in model year 2000 with credits that reflect a revised FEL adequately identified by certification quality test data. EPA refers to this process as a ''true-up'' of the corporate average reduction levels, such that FELs and credit balances for model years 1998–2000 will be based on actual test data.

Beginning in model year 2004, any existing technology engine family that the manufacturer intends to continue producing will be required to meet the full range of administrative requirements. With the exception of existing technology engine families that the manufacturer commits to discontinue by the end of model year 2004 or 2005 (and EPA approves), the certification process is augmented with production line testing, in-use testing, emission-defect reporting, and defect warranty requirements.

2. Production Line Testing and Compliance

As proposed, EPA is finalizing an innovative quality control program in which the manufacturer monitors the emissions quality of engine families with respect to the engine family emission limit (FEL) that the manufacturer chooses for certification. In essence, this program assures EPA and the manufacturer that the engines are being built as designed.

EPA is finalizing the marine engine production line testing program for the reasons described below, as well as the reasons cited in the NPRM and SNPRM. Under this emission compliance program, manufacturers test engines as they leave the production line. The

statistical procedure employed in this program will enable manufacturers to select engines at appropriate sampling rates for emission testing.

This program is different than the approach EPA uses for other mobile sources, such as on-highway motor vehicles. The more traditional approach relied on for assuring that the engines are produced as designed for other mobile sources is called Selective Enforcement Auditing (SEA). In the SEA program, EPA audits the emissions of new production engines by requiring manufacturers to test engines pulled off the production line upon short notice. This spot checking approach relies largely on the deterrent effect: The premise is that manufacturers would design their engines and production processes and take other steps necessary to make sure their engines are produced as designed and thereby avoid the penalties associated with failing SEA tests, should EPA unexpectedly do an audit.

EPA has taken a different approach in the marine engine production line testing program: This program implements a more flexibly organized testing regime that acts as a quality control method that manufacturers will proactively utilize and monitor to assure compliance. Manufacturers will continue to take steps to produce engines within statistical tolerances and assure compliance aided by the quality control data generated by PLT which will identify poor quality in real time.

As proposed, EPA is employing a statistical procedure known as the Cumulative Sum (CumSum) Procedure in the Production Line Testing Program that will enable manufacturers to select engines at appropriate sampling rates for emission testing and will determine whether production line engines are complying on average with emission standards. CumSum procedures are used for the detection of changes in the average level of a process; this procedure is useful both as an assessment tool for EPA and a quality control tool for engine manufacturers. The procedure is capable of detecting significant changes in the average level of a process, while ignoring minor fluctuations that are simply acceptable variation in the process.

EPA will also finalize a SEA program that will serve as a backstop measure should the marine engine production line testing program become problematic. For example, if EPA became aware of reporting fraud or improper testing procedures, it would be appropriate for EPA to perform selective enforcement audits to assure compliance. Additional reasons for SEA are discussed in the proposal and supplemental proposal.

Should production line or SEA testing show that an engine family is not complying with its FEL, EPA may suspend or revoke the engine family Certificate of Conformity in whole or in part. Before the suspension or revocation goes into effect, EPA will work with the manufacturer to facilitate approval of the required production line remedy in order to eliminate the need to halt production if possible. To have the certificate reinstated subsequent to a suspension, or reissued subsequent to a revocation, the manufacturer must raise the FEL for the applicable production engines or demonstrate by showing passing data that improvements, modifications, or replacement have brought the engine family into compliance with the existing FEL. If the manufacturer raises the FEL, all data accumulated during the model year but prior to the FEL change would be recalculated with the new FEL, including the certification credits.

Under the final rule, EPA may allow FEL changes to engines previously produced based on PLT testing. EPA is adopting this more flexible approach for this rulemaking as a pilot program provision. This rulemaking is an appropriate place to try this provision because the total scope of the marine requirements include a fairly comprehensive production line testing and in-use testing program based on the principle of gaining more and better emission information upon which to determine compliance. EPA will monitor manufacturers' use of FEL changes and may implement appropriate regulatory changes if manufacturers are attempting to change FELs to levels that do not provide adequate assurance of in-use emission levels (e.g., ''shaving FELs'') or gaming the system to skew certification credits at the expense of or to the benefit of in-use credits.

While EPA may allow FEL changes to apply to engines previously produced based on PLT data and Administrator approval, EPA has not allowed this for Selective Enforcement Auditing (SEA) or as an alternative to recall in the past for other mobile sources and is not allowing it for SEA or as an alternative to recall of gasoline marine engines either. Allowing FEL changes to be made on engines previously produced in this rulemaking does not imply that it will be preferred for other rulemakings, SEA, or as an alternative to recall in the future. EPA thinks it important that the deterrent effect of the SEA and recall programs be maintained. Therefore, exceedance of the FEL in an SEA may be the basis for recall and exceedance of the FEL in use may be the basis for recall or the use of the in-use credit program.

Both the production line testing and SEA programs are authorized under section 206(b) of the CAA, 42 U.S.C. 7525(b). This provision of the CAA authorizes EPA to test new production engines to determine whether such engines do in fact conform to the emission standards with respect to which the certificate of conformity was issued. In addition, the Agency may require that a manufacturer test the engines in compliance with conditions specified by EPA. Further, section 208(a) directs manufacturers to establish and maintain records, perform tests where such testing is not otherwise reasonably available under Part A, Title II, of the CAA, make reports, and provide information that the agency may reasonably require to determine whether the manufacturer has complied with applicable emission standards. 42 U.S.C. 7542(a).

3. In-Use Testing and Remediation

As proposed, EPA is finalizing a manufacturer's in-use testing program. This testing will provide information regarding the in-use emission performance of engines in relation to the expected in-use performance to which the engines were designed and built. Further, the Agency is allowing manufacturers to engage in averaging, banking and trading of in-use emission credits to reconcile the in-use test results as an alternative to mandatory recall. Positive emission credits may be generated from an engine family whose average in-use emission performance is lower than its FEL and may be used to offset in-use emission performance in excess of the FEL by another engine family discovered through the in-use testing program. Based on such use of credits, EPA would plan on not making a determination that a substantial number of engines in the engine family fail to conform with the applicable standards.

Manufacturer based in-use testing is advantageous because it is an innovative method of gaining acceptable knowledge of in-use engine emission performance. Further, the in-use credit program allows for an expedient and appropriate remediation under the circumstances. An alternative to mandatory recall is also necessary based on the limited ability to conduct effective recalls as discussed in more detail below. In the more traditional approach, EPA focuses on targeted audit testing wherein the deterrent threat of recalling and fixing engines is designed

to provide incentive to manufacturers to ensure engines comply in-use. EPA is finalizing the recall provisions as a backstop measure, yet is hopeful that the new approach of the in-use testing program and in-use credit program is effective and obviates the need for the Agency to consider the recall provisions.

i. In-Use Testing Program

This program contains elements designed to minimize the burden on the industry while maintaining a strong incentive to build engines that meet applicable standards when in actual use. Gasoline marine engine manufacturers will be subject to an in-use testing period of up to 10 years or 350 hours (whichever occurs first), except for personal watercraft, which would be 5 years or 350 hours of operation (whichever occurs first).

The in-use testing program provides that a portion of a manufacturer's engine families will be tested each year and provides for greatly reduced testing if the initial engines are in compliance. Manufacturers may establish different fleets of engines for their in-use testing program. Each engine within a fleet must have experienced conditions that are representative of actual in-use conditions. EPA will provide guidance for manufacturers in establishing proper maintenance practices for their in-use testing program.

Under this program, the manufacturer will have certain discretion to establish its own in-use testing program within EPA's guidelines. For example, EPA may designate a certain engine family to be tested for a particular model year. At that time, the manufacturer can determine when and where the in-use testing will take place at its own facilities.

In-use compliance with emission standards will be determined based on test results using the same test procedure as that used in certification. The in-use testing program is authorized under section 208(a) of the CAA, 42 U.S.C. 7542(a). Section 208(a) directs manufacturers to establish and maintain records, perform tests where such testing is not otherwise reasonably available under Part A, Title II, of the CAA, make reports, and provide information that the agency may reasonably require to determine whether the manufacturer has complied with applicable emission standards. 42 U.S.C. 7542(a).

ii. In-Use Credit Program

EPA is finalizing the marine engine in-use credit program which is designed to reduce compliance cost without reducing environmental benefits. The program provides manufacturers with flexibility in addressing potential in-use noncompliance in a way that EPA agrees would avoid the need for a determination of nonconformity under section 207(c) of the Act, and thereby avoid a recall. As proposed, participation in this program is voluntary.

The flexibility that this program provides is appropriate given the particular circumstances of the marine engine industry. In the event that engine families fail in-use testing, EPA believes that recalling the nonconforming engines would be particularly burdensome and impractical for this industry, mainly due to the difficulty of tracking the nonconforming engines. If registration with a government entity occurs, it is the vessel that is registered, not the vessel's engine; manufacturers of marine engines do not typically know in what vessels their engines are installed. Tracking the engines would thus be cumbersome and difficult, especially because manufacturers estimate that the owner moves or the vessel is typically sold about four years after the initial purchase. Therefore, recalling the engines would likely require substantial resources, yet not be highly effective in actually remedying the excess emissions.

The Agency has the authority to promulgate this in-use credit program under the circumstances. The CAA provides that the marine engine emission standards, when finalized, shall be subject to section 207 of the Act, ''with such modifications of the applicable regulations * * * as the Administrator deems appropriate.'' 42 U.S.C. 7547(d). Section 213 requires engines to comply with emission standards when in actual use throughout their regulatory useful lives, and section 207 requires a manufacturer to remedy in-use nonconformity when EPA determines that a substantial number of properly maintained and used engines fail to conform with the applicable emission standards. 42 U.S.C. 7541. Once EPA makes this determination, recall would be necessary to remedy the nonconformity. However, under the circumstances here, where OB/PWC marine engines use ABT to comply with the emission standards at certification and it is expected that recall would be impractical and largely ineffective, it is appropriate not to make a determination of substantial nonconformity where a manufacturer uses ABT to offset in-use noncompliance. Thus, the CAA offers EPA the discretion to not make a section 207(c) determination of substantial nonconformity where a marine engine manufacturer uses ABT to offset any noncompliance with the statute's in-use performance requirements. Though the language of section 213(d) is silent on the issue of averaging, it allows EPA considerable discretion in determining what modifications to the on-highway regulatory scheme are appropriate for nonroad engines.

In-use credits are based upon in-use testing conducted by the manufacturer. For a given engine family, the in-use compliance level (CL) is determined by averaging the results from in-use testing performed for that engine family. If the in-use CL is below the applicable FEL to which the engine family is certified, the manufacturer will generate in-use credits for that engine family. If the in-use CL is above the applicable FEL, the engine family will experience a credit deficit. The in-use credit program credits are calculated in the same manner as the certification credits, except that the basis is the difference between the CL and the FEL, not between the FEL and the standard. All other elements of the credit calculation are the same, including the use of engine family sales, use, sales-weighted power, load factor, and survival probability.

iii. Recall Provisions

EPA will be actively monitoring and evaluating the results of the in-use testing and in-use credit programs so as to ensure that it is unnecessary to utilize the recall provisions. However, if these new, innovative programs do not produce adequate assurance of corporate in-use compliance, the recall provisions serve as a backstop that can be utilized.

EPA expects that remedial action under section 207(c) would be largely ineffective, both because industry structure and engine owner turnover make it difficult for a manufacturer to identify the owners of a nonconforming engine, and because safety recalls of marine engines have generated little consumer response in the past. This is why the in-use credit program is an important element of the overall compliance program. However, despite the difficulties associated with recalling gasoline marine engines, EPA is finalizing the provisions because the in-use credit program is a new and unproven type of program to address in-use compliance and EPA thinks that applying the recall subpart makes it more direct and expedient to take action if necessary. Section 213(d) of the CAA provides that new nonroad engines ''shall be subject'' to the provisions of sections 206–209 (42 U.S.C. 7547(d)).

Under section 207(c) of the CAA the Administrator must require manufacturers to recall applicable engines if the Administrator determines that a substantial number of properly maintained and used engines are tested and found not to conform with applicable emissions standards when in actual use throughout their useful life. *See* Center for Auto Safety v. EPA, 747 F.2d 1 (D.C. Cir. 1984).

As proposed, the useful life and in-use testing period for spark-ignition marine engines will be for 10 years or 350 hours of operation (whichever occurs first), except personal watercraft, which would be 5 years or 350 hours of operation (whichever occurs first). The actual repair period for which a manufacturer must remedy nonconformities would not be limited by the in-use testing period but by the regulatory useful life. Thus any resulting recall may apply to all engines of the recall family within the regulatory useful life at the time EPA makes a determination of substantial nonconformity. However, the age and hours of operation of the engine at the time of repair is not relevant. So long as an engine was within its useful life as of the date of the nonconformity determination, it is subject to recall repair even if it has been operated beyond the useful life period at the time the manufacturer recalls the engine or the repair is performed.

Given the unique nature of the OB/PWC industry, all innovative compliance program elements described above, and the complications with recall described above for this industry, EPA thinks it appropriate to excercise discretion to limit recall repair liability in this rule in this way. The Agency does not expect limiting the recall repair liability as described above to affect compliance enforcement or the emission reductions expected from this rule.[4]

4. Consumer Warranty on Emission Components

In accordance with section 207(a) of the CAA, manufacturers must warrant to the ultimate purchaser and any subsequent purchaser, for a specified warranty period set by EPA, that the emission related components and systems of OB/PWC engines are free from defects in material or workmanship which would cause such engine to fail to conform with applicable regulations. The statute also requires manufacturers to provide a ''time of sale'' warranty that the engine is designed, built, and equipped so as to conform at the time of sale with applicable emission regulations. *See* 42 U.S.C. 7541(a)(1). This consumer warranty covers both ''major emission control components'' and ''emission related components''. Major emission control components include such items as catalytic converters, exhaust gas recirculation, air injection systems, and thermal reactors. Such components have a significant effect on the emissions of the engine if they are defective or malfunctioning. Emission related components include such systems and related sensors as the fuel metering system, ignition system, and air induction system. These components affect emission performance but are different from major emission control components in that they are not designed specifically for emission control.

EPA has decided to phase-in the defect warranty requirements in the early years of the program, gradually increasing the warranty time period until in model year 2004 and after the warranty period is 3 years or 200 hours, whichever comes first, for major emission control components and 2 years or 200 hours, whichever comes first, for emission related components. For model years 2001, 2002, and 2003, emission related components need only be covered for 1 year while the major emission control components, which EPA is most concerned about, will be warranted for 3 years or 200 hours beginning in 2001. For model years 2000 and sooner, major emission control components and emission related components need only be covered for a minimum of 1 year.

Current standard manufacturers warranties of the type this rule applies to are one year in length. Some manufacturers offer two year warranties, but this is the exception rather than the norm. The warranty requirements in this rule double or triple the warranty time period for those items related to the emission characteristics of the engine. This warranty will help ensure the manufacturing of a durable emission system and will require the manufacturer to cover all repairs and replacements involving emission related components at no cost to the ultimate purchaser during the warranty period.

5. Manufacturer Reporting of Engines With Emission Defects and Voluntary Emission Recalls

The Agency is adopting the proposed emission defect reporting regulations which require a manufacturer to file a defect information report whenever a manufacturer identifies the existence of a specific emission-related defect in 25 or more engines manufactured in the same model year. However, no report would need to be filed if the defect was corrected prior to the sale of the affected engines to the ultimate purchaser. Further, manufacturers must file a report whenever a voluntary emission recall is undertaken.

Reporting of emission defects is important in helping EPA identify engine families for in-use testing and assisting in resolution of warranty claims and monitoring misbuilds and other emission quality issues across manufacturers.

6. Tampering With Emission Components

In accordance with section 203(a)(3)(A), the Agency is adopting provisions that will prohibit tampering with marine engine emission components. All persons will be prohibited from tampering with any emission-related component or element of design installed on or in a marine engine. Marine tampering provisions will help ensure that in-use engines remain in certified configurations and continue to comply with emission requirements. The Agency has applied the existing policies developed for on-highway tampering to engines included in this rule. (See Office of Enforcement and General Counsel; Mobile Source Enforcement Memorandum No. 1A, June 25, 1974.)

7. Engines Excluded or Exempted From Regulations

EPA is adopting the proposed regulations which allow manufacturers and other persons, where appropriate, to obtain exemptions from regulation for certain purposes. These purposes include research, investigations, studies, demonstrations, training, or for reasons of national security. Export exemptions, manufacturer-owned engine exemptions, and some national security exemptions are granted without application. Other exemptions are obtained by application.

Nonconforming engines used solely in competition will be excluded from this rule. Engines other than those used in competition may be excluded if the Administrator determines that the exclusion is necessary because emission

[4] EPA's authority to impose recall repair liability is broader than EPA chooses to finalize with respect to the marine final rulemaking today. *See* 40 CFR part 85, subpart S, appendix A. *See* also GM v. Ruckelshaus, 742 F.2d 1561 (D.C. Cir. 1984) (en banc), cert. denied, 471 U.S. 1074 (1985). The action taken today is limited to OB/PWC spark-ignition marine engines and does not affect the recall repair liability of other mobile sources. Further, it is based on the unique circumstances cited above.

control modifications would be unsafe, impractical, or highly unlikely because of features that are not easily removed.

8. Prohibition on Importation of Uncertified Engines Into the United States

Nonconforming marine engines originally manufactured after the effective date of this rule, will not be permitted to be imported for purposes of resale, except as specifically permitted by this action. This rule provides certain exemptions for various reasons, including temporary exemptions for repairs and alterations, testing and display, and permanent importation exemptions for national security and certain marine engines proven to be identical, in all material respects, to their corresponding EPA certified versions.

The Agency has decided not to establish an independent commercial importers (ICI) program for marine engines.

9. Revisions to Small SI (40 CFR part 90) and Large CI (40 CFR part 89) Regulations—Added Exemptions

EPA is finalizing the provisions, as proposed, regarding exemptions for other nonroad regulations, including small SI engines and large CI engines. No comments were received that opposed these provisions. The exemptions for nonroad categories are now comparable to highway engines. The finalized provisions include the addition of competition exclusion and revised criteria for national security exemption.

V. Discussion of Issues

This section of the preamble discusses the two most significant issues that arose in comments on the NPRM and SNPRM. There are many important issues that are not discussed here, rather, that are analyzed in the Summary and Analysis of Comments document. This is a separate document and is available to the public, as described in the Supplementary Information section at the beginning of this preamble. Further discussion of the two issues presented here also appear in the Summary and Analysis of Comments document.

A. No Sterndrive or Inboard Emission Standards

A sterndrive or inboard (SD/I) engine is an engine which utilizes a four-stroke, automotive style engine block which has been modified (i.e., marinized) to facilitate the marine application. The design is such that the engine (and drive unit in the case of inboard engines) is internal to the hull of the marine vessel. These current, uncontrolled SD/I engines are over 85 percent cleaner than existing OB/PWC engines for HC. With this rule seeking a 75 percent reduction in emissions from OB/PWC engines on average, these SD/I engines will remain comparatively cleaner than levels expected to be achieved from regulated OB/PWC by MY 2006.

Section 213(a)(3) directs EPA to establish emission standards for ''classes or categories'' of new nonroad engines which achieve the ''greatest degree of emission reduction achievable through the application of technology * * *, giving appropriate consideration to the cost of applying such technology within the period of time available to manufacturers'' and other factors. 42 U.S.C. 7545(a)(3). In this rulemaking, EPA is treating all marine spark-ignition engines as one ''class or category'' of new nonroad engines for which EPA is establishing emission standards. SD/Is constitute one subclass or subcategory of the marine SI class or category, while OB/PWC constitutes another subclass or subcategory. In the SNPRM, EPA requested comment on two proposals for SD/I emission standards: (1) ⅔ MY 2006 OB/PWC HC+NO_X cap SD/I emission standard (with the proposed ''postcard cert'' program) or, (2) no SD/I emission standard. In general, commenters supported both the SNPRM proposals. After further analyzing the comments and both options, EPA is finalizing no SD/I emission standards.[5]

EPA has determined that it is appropriate to impose the HC+NO_X emission standard for OB/PWC described above, and no HC or NO_X standard for SD/I. EPA believes not imposing an emission standard for SD/I engines achieves greater emission reductions from gasoline marine engines as a class or category than would imposition of SD/I emission standards as proposed in the NPRM or SNPRM, and at less cost to the gasoline marine engine industry as a whole. Because there will be no costs of regulatory compliance imposed on SD/I engines, these engines will become relatively cheaper than regulated OB/PWC. This shift in relative cost is expected to encourage manufacturers to offer a greater range of SD/I engines, including smaller SD/Is that could compete with smaller power output OB/PWC. As a result, EPA expects to realize greater emission reductions from the gasoline marine engine category as a whole due to some substitution of SD/Is for OB/PWC than would be expected to occur with the alternative proposals for SD/I emission standards proposed in the NPRM and SNPRM, and at lesser cost.[6]

In the SNPRM, EPA requested comment on whether the imposition of SD/I standards at the level proposed in the SNPRM would offer a useful backstop against emissions backsliding (i.e. worsening of emissions performance) by SD/I. EPA did not receive any comments suggesting a concern with potential backsliding. The only comment received indicated that the risk of backsliding was low because the market is driven by performance and would already have exhibited backsliding if this involved a performance increase. Since this is not the case, the commenter indicated that backsliding was unlikely.

EPA believes that emissions backsliding is not a realistic concern with SD/I for several reasons. First, these engines have been moving toward electronic fuel injection technology to gain better control over engine performance, which may also result in better emission performance. Second, customer demands for both low odor and low smoke discourage manufacturers from selling engines that have higher emissions. Third, emission performance of the engine blocks used in marine engines is improving because of carryover of on-highway emission-related block designs.

EPA plans to issue guidance to states that provides information on the relative emissions from the class or category of gasoline marine engines. This guidance will explain that EPA is not finalizing emission standards for the subclass or subcategory of SD/I engines because they are relatively clean. If at some point in the future it may be appropriate to regulate SD/I engines, EPA believes it is generally more efficient to regulate SD/I engines on a national basis. Information voluntarily provided by industry that exemplifies the emission characteristics of the fleet of SD/I engines will be included in the guidance. However, EPA is not requiring the reporting of such information.

[5] The Summary and Analysis of Comments document provides a full discussion of the comments received on this issue.

[6] The SNPRM proposal to apply a level of two-thirds of the final OB/PWC curve would not require manufacturers to physically change the engines. However, to the extent that an emission standard imposes costs on SD/I engines, such standards may tend to limit SD/I substitution for OB/PWC. Therefore, somewhat less emissions reductions would be obtained than if there were no SD/I standard at all, while more cost would be imposed on the gasoline marine engine industry as a whole.

B. Outboard/Personal Watercraft (OB/PWC) Emission Standards Meet Statutory Criteria

EPA is finalizing an HC+NO_X average emission standard, which when completely phased-in (model year 2006), will result in at least an overall 75 percent reduction in HC emissions from OB/PWC compared to baseline levels. The HC emission reduction will come from the use of cleaner technologies, such as 2-stroke direct injection, 4-stroke, catalyst, or other technologies, for OB/PWC.

EPA has determined that this standard for the OB/PWC subcategory, together with the lack of a standard for SD/I, is appropriate under the statutory criteria of CAA section 213(a)(3). In selecting emission standards for new nonroad engines, section 213(a)(3) directs EPA to establish ''the greatest degree of emission reduction achievable through the application of technology* * *, giving appropriate consideration to the cost of applying such technology with in the period of time available to manufacturers'' and other factors. 42 U.S.C. 7545(a)(3). The Regulatory Impact Analysis and Summary and Analysis of Comments Document further discuss all issues relating to the appropriateness of the emission standard according to the statutory criteria specified in section 213(a)(3), including technology, cost, noise, energy, and safety factors. In assessing the impact of techological changes and considering the associated cost impacts, EPA analyzed the following among other factors.

1. The marginal cost-effectiveness of emission control.

2. Consideration of price elasticity effects.

3. Spreading capital control costs over time.

4. The level of the NO_X standard and associated technology options.

5. The emission standard structure.

Based on this analysis, EPA proposed in the NPRM the OB/PWC HC standard incorporated into the HC+NO_X standard for OB/PWC finalized in this action.

Some commentors questioned the use of marginal cost-effectiveness as a consideration in setting the emission standard while other commenters supported this approach. The language of section 213(a)(3) does not expressly require EPA to use a cost-effectiveness analysis when establishing a new nonroad engine standard. However, the language does give EPA broad latitude to give consideration to the cost of applying new emission reducing technologies. One option that EPA retains in giving ''appropriate'' consideration to such cost is to look at cost-effectiveness (and also price elasticity effects and the spread of capital control costs over time). EPA thinks it appropriate to take into consideration marginal cost-effectiveness in setting the gasoline marine OB/PWC HC+NO_X emission standard because it is a reasonable way to take into account the sensitive financial position of the industry, the discretionary nature of the purchases and the resulting impact on emissions, and the magnitude of investment estimated to reduce exhaust emissions. A further discussion of these issues may be found in the RIA, the Summary and Analysis, and the two prior proposals.

Figure 1 shows the marginal cost-effectiveness of control technology for gasoline marine OB/PWC. This curve represents the emission reductions, including the tradeoff between HC and NO_X, associated with the cost of control technologies for OB/PWC engine families. The underlying data is based on manufacturer's best estimates of control technology options. EPA's analysis of these estimates has concluded that they are reasonable estimates. To the extent that they are not exact, EPA nonetheless expects the shape of the curve to remain consistent. These conclusions are discussed in more detail throughout the Regulatory Impact Analysis.

EPA has chosen to set the average HC+NO_X emission standard at an HC reduction of 75 percent from baseline levels. EPA believes that the OB/PWC HC+NO_X standard adopted today is appropriately based on the criteria set out in CAA section 213(a)(3). The standard will achieve significant reductions from a previously unregulated category, calling for significant investment to develop and apply the technological changes needed to achieve these reductions. This technology will be available, and will not impose undue costs on either the industry or consumers. Beyond this 75 percent level costs dramatically rise disproportionately in relation to further reductions. The marginal cost-effectiveness curve is practically vertical at the 90 percent HC reduction level. EPA believes that a 75 percent reduction level, at this time, is the appropriate level of reductions based on all of the criteria found in CAA section 213(a)(3).

BILLING CODE 6560–50–P

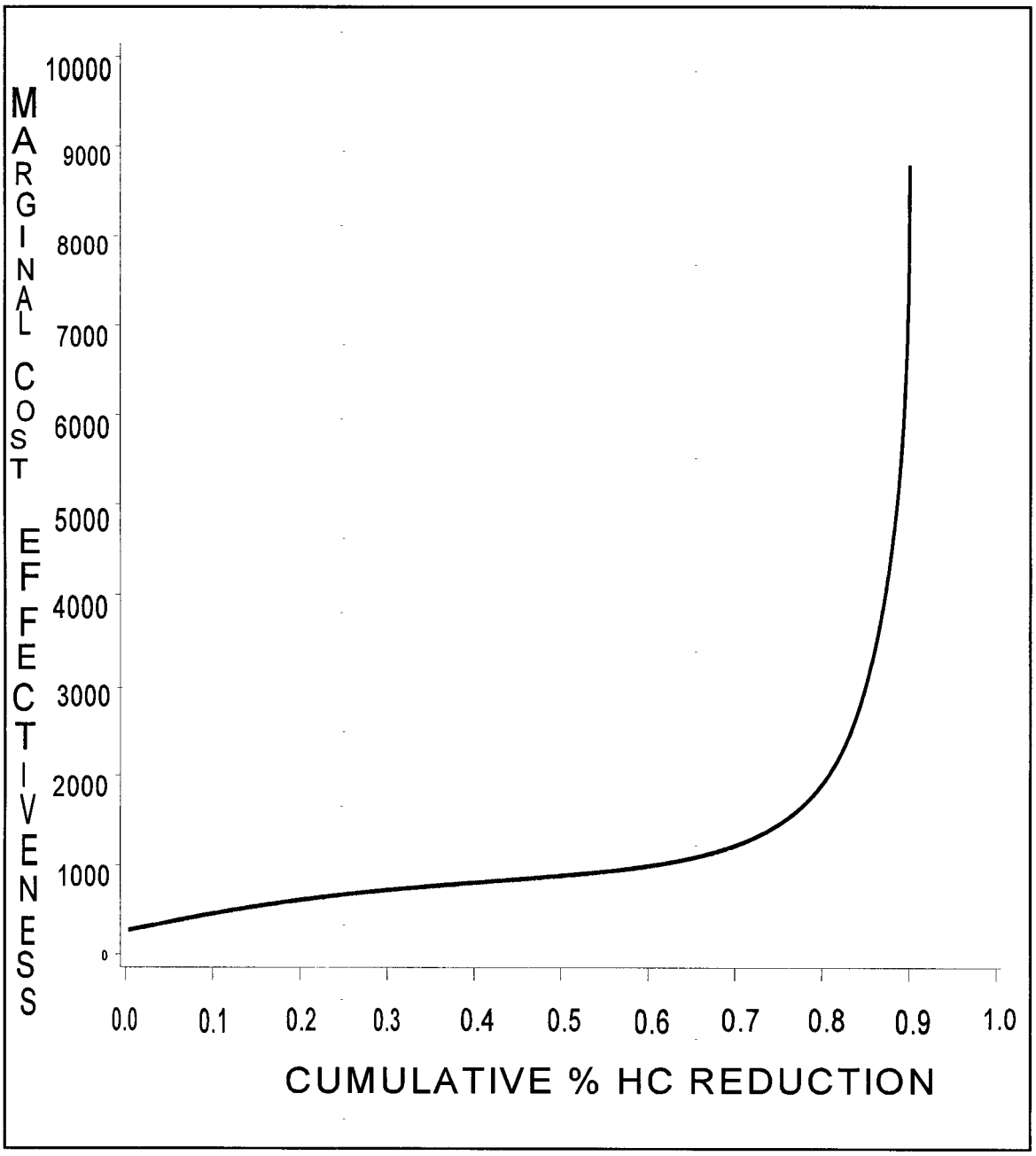

Figure 1
Per Engine Family Marginal Cost-Effectiveness Curve
Outboards and Personal Watercraft

BILLING CODE 6560–50–C

VI. Regulatory Impact Analysis

EPA performed a draft Regulatory Impact Analysis (RIA) for the NPRM and received comment from the public regarding this draft RIA. Such comments are discussed in the Summary and Analysis of Comments Document and in the Regulatory Impact Analysis that was revised for this final rulemaking. These are separate documents from this preamble and are available to the public, as described in the Supplementary Information section at the beginning of this preamble. An extensive discussion of the emission reduction technology that EPA evaluated may be found in the RIA.

The cost-effectiveness of the program for OB/PWC engines is approximately $1000 per ton HC reduced. This number represents EPA's estimate of the ratio of the net present value of the annualized costs to consumers to the net present value of the annualized national HC inventory reduction in tons. These net present values are taken over the time horizon in which the fleet is expected to fully turn over. This ratio is relatively low compared to most other HC national reduction strategies.

EPA expects that average costs for OB/PWC engines will increase modestly, approximately 10–15%, or approximately $700 on the average power output engine. These modest increases would potentially be much larger if EPA had not structured the emission standard and administrative program provisions with the broadest market flexibilities possible. This action is designed to provide manufacturers with the utmost flexibility to find the lowest cost solutions to meeting the emission reduction targets.

Table 3 shows approximate percent reductions in the national OB/PWC HC inventory that this regulation will produce. Emission reductions are achieved via fleet turnover and thus the 75 percent reduction is not approached until years after the implementation date. The time horizon for complete fleet turnover is very long for gasoline marine engines, potentially up to 50 years for some engines.

TABLE 3.—PROJECTED INVENTORY REDUCTIONS

Year	Percent reduction in OB/PWC HC inventory
2000	4
2005	26
2010	52
2015	68
2020	73
2030	75
2040	75
2050	75

VII. Administrative Requirements

A. Reporting and Recordkeeping Requirements

The information collection requirements in this rule have been submitted for approval to the Office of Management and Budget (OMB) under the Paperwork Reduction Act, 44 U.S.C. 3501 *et seq.* EPA prepared eight Information Collection Request (ICR) documents for the NPRM. Two ICRs were approved before publication of the SNPRM and new ICRs were submitted as a result of the revised proposals. Copies of the ICR documents may be obtained from Sandy Farmer, Information Policy Branch; EPA; 401 M St., SW. (mail code 2136); Washington, DC 20460 or by calling (202) 260–2740.

The eight ICR documents that have been prepared are:

EPA ICR document number	Type of information
1722.01	Certification/AB&T.
282.07	Emission Defect Information.
1723.01	Importation of Nonconforming Engines.
1724.01	Selective Enforcement Auditing.
0012.08	Engine Exclusion Determination.
0095.07	Precertification and Testing Exemption.
1725.01	Manufacturers' Assembly Line Testing.
1726.01	Manufacturers' In-use Testing.
1763	In-Use Credit Program.

Each ICR document estimates the public reporting, recordkeeping, and testing burden for collecting the specified information, including time for reviewing instructions, searching existing data sources, gathering and maintaining the data needed, and completing the collection of information. EPA estimates that the public burden for the collection of information for all ICRs under the final rule as a whole would average approximately 6,900 hours annually for a typical engine manufacturer. This estimate is based on the revised estimates submitted as a result of the proposals. The original estimates included estimates of very low burden for some small manufacturers (such as gasoline SD/I manufacturers) and smaller estimates for compression-ignition diesel engine manufacturers that produced a lower average number in the previous proposals. The hours spent by a manufacturer for information collection activities in any given year would be highly dependent upon manufacturer specific variables, such as the number of engine families, production changes, emissions defects, etc.

Send comments regarding the burden estimate or any other aspect of this collection of information, including suggestions for reducing this burden to Chief, Information Policy Branch, EPA, 401 M Street, SW. (PM–223Y), Washington, DC 20460; and to the Office of Information and Regulatory Affairs, Office of Management and Budget, Washington, DC 20503, marked ''Attention: Desk Officer for EPA.''

B. Impact on Small Entities

EPA has determined that the final regulations do not have a significant impact on a substantial number of small entities. This is largely because the final rulemaking does not apply to SD/I or diesel compression-ignition (CI) engines. As explained in the SNPRM, EPA proposed many flexibilities for SD/I and diesel CI manufacturers because of EPA concerns regarding the significant impact on a substantial number of small manufacturers of SD/I or diesel CI engines. However, EPA is not finalizing emission standards for SD/I or diesel CI engines.

EPA does not think the final rule being promulgated will have a significant impact on a substantial number of small entities primarily because there is not a substantial number of small OB/PWC manufacturers which this rule affects. One OB/PWC manufacturer who commented on the rule may be considered a small entity by virtue of having less than 500 employees for parent company and subsidiaries. EPA suspects that there is one additional manufacturer that may qualify as a small entity. The other OB/PWC manufacturers exceed the applicable size standard for the relevant type of small business as established by the Small Business Administration. Therefore, it appears that there may be at most two small entities affected by this rule.

EPA is finalizing many flexibilities for smaller volume OB/PWC engine manufacturers and smaller volume engine families. Also, EPA has taken into consideration the potential competitive impacts on some smaller volume manufacturers in finalizing

provisions relating to averaging emissions across OB and PWC products. The Summary and Analysis of Comments addresses these flexibilities and competitive concerns.

C. Submission to Congress and the General Accounting Office

Under 5 U.S.C. 801(a)(1)(A) as added by the Small Business Regulatory Enforcement Fairness Act of 1996, EPA submitted a report containing this rule and other required information to the U.S. Senate, the U.S. House of Representatives and the Comptroller General of the General Accounting Office prior to publication of the rule in today's Federal Register. This rule is a ''major rule'' as defined by 5 U.S.C. 804(a).

D. Executive Order 12866

Under Executive Order 12866,[7] the Agency must determine whether the regulatory action is ''significant'' and therefore subject to review by OMB and the requirements of the Executive Order. The Order defines ''significant regulatory action'' as one that is likely to result in a rule that may:

(1) Have an annual effect on the economy of $100 million or more or adversely affect in a material way the economy, a sector of the economy, productivity, competition, jobs, the environment, public health or safety, or state, local, or tribal governments or communities;

(2) Create a serious inconsistency or otherwise interfere with an action taken or planned by another agency;

(3) Materially alter the budgetary impact of entitlements, grants, user fees, or loan programs or the rights and obligations of recipients thereof; or

(4) Raise novel legal or policy issues arising out of legal mandates, the President's priorities, or the principles set forth in the Executive Order.

Pursuant to the terms of Executive Order 12866, the Agency has determined that this rulemaking is a ''significant regulatory action'' because it may have an annual effect on the economy of $100 million or more or may adversely affect in a material way that sector of the economy involved with the production of gasoline marine engines. As such, this action was submitted to OMB for review. Changes made in response to OMB suggestions or recommendations will be documented in the public record.

[7] 58 FR 51735 (October 4, 1993).

E. Unfunded Mandates Reform Act of 1995

Title II of the Unfunded Mandates Reform Act of 1995 (UMRA), Pub. L. 104–4, establishes requirements for Federal agencies to assess the effects of their regulatory actions on State, local, and tribal governments and the private sector. Under section 202 of the UMRA, EPA generally must prepare a written statement, including a cost-benefit analysis, for proposed and final rules with ''Federal mandates'' that may result in expenditures to State, local, and tribal governments, in the aggregate, or to the private sector, of $100 million or more in any one year. Before promulgating an EPA rule for which a written statement is needed, section 205 of the UMRA generally requires EPA to identify and consider a reasonable number of regulatory alternatives and adopt the least costly, most cost-effective or least burdensome alternative that achieves the objectives of the rule. The provisions of section 205 do not apply when they are inconsistent with applicable law. Moreover, section 205 allows EPA to adopt an alternative other than the least costly, most cost-effective or least burdensome alternative if the Administrator publishes with the final rule an explanation why that alternative was not adopted. Before EPA establishes any regulatory requirements that may significantly or uniquely affect small governments, including tribal governments, it must have developed under section 203 of the UMRA a small government agency plan. The plan must provide for notifying potentially affected small governments, enabling officials of affected small governments to have meaningful and timely input in the development of EPA regulatory proposals with significant Federal intergovernmental mandates, and informing, educating, and advising small governments on compliance with the regulatory requirements.

Today's rule contains no Federal intergovernmental mandates (under the regulatory provisions of Title II of the UMRA) because there are no enforceable duties on State, local, or tribal governments. However, EPA has determined that this rule contains a Federal mandate that may result in expenditures of $100 million or more for the marine industry in any one year. Accordingly, EPA has prepared under section 202 of the UMRA a written statement which is included in the Regulatory Impact Analysis (RIA). A qualitative and quantitative assessment of the anticipated benefits and costs of this rule is available in the written statement included in the RIA. In summary, this rule achieves reductions in HC which will contribute to the reduction of VOCs and ozone in ozone nonattainment areas throughout the U.S. The cost-effectiveness of this rule is approximately $1000 per ton HC reduced. The annualized costs of this rulemaking exceed $300 million in 2006, which is roughly 7% of projected retail expenditures on OB/PWC in that year. The average cost for OB/PWC engines will increase approximately 10–15% or $700 on the average power output engine.

EPA identified and considered a range of options in its proposal of this rule, as described in detail in the NPRM and SPNRM. In finalizing this rule, EPA has adopted the least costly, most cost-effective or least burdensome alternative that achieves the objectives of the rule and complies with the Agency's statutory mandate under section 213(a)(3) of the Clean Air Act.

List of Subjects

40 CFR Part 89

Environmental protection, Administrative practice and procedure, Air pollution control, Confidential business information, Imports, Incorporation by reference, Labeling, Nonroad source pollution, Reporting and recordkeeping requirements.

40 CFR Part 90

Environmental protection, Administrative practice and procedure, Air pollution control, Confidential business information, Imports, Incorporation by reference, Labeling, Nonroad source pollution, Reporting and recordkeeping requirements.

40 CFR Part 91

Environmental protection, Administrative practice and procedure, Air pollution control, Confidential business information, Imports, Incorporation by reference, Labeling, Nonroad source pollution, Reporting and recordkeeping requirements.

Dated: July 31, 1996.

Carol M. Browner,

Administrator.

For the reasons set out in the preamble, title 40, chapter I of the Code of Federal Regulations is amended as follows:

PART 89—[AMENDED]

1. The authority citation for part 89 continues to read as follows:

Authority: Sections 202, 203, 204, 205, 206, 207, 208, 209, 213, 215, 216, and 301(a) of the Clean Air Act, as amended (42 U.S.C. 7521, 7522, 7523, 7524, 7525, 7541, 7542, 7543, 7547, 7549, 7550, and 7601(a)).

2. Section 89.2 is amended by revising the definition of ''new'' to read as follows:

§ 89.2 Definitions.

* * * * *

New for purposes of this part, means a nonroad engine, nonroad vehicle, or nonroad equipment the equitable or legal title to which has never been transferred to an ultimate purchaser until after the engine, vehicle, or equipment is placed into service, then the engine, vehicle, or equipment will no longer be new after it is placed into service. A nonroad engine, vehicle, or equipment is placed into service when it is used for its functional purposes. With respect to imported nonroad engines, nonroad vehicles, or nonroad equipment, the term ''new'' means an engine, vehicle, or piece of equipment that is not covered by a certificate of conformity issued under this part at the time of importation, and that is manufactured after the effective date of a regulation issued under this part which is applicable to such engine, vehicle, or equipment (or which would be applicable to such engine, vehicle, or equipment had it been manufactured for importation into the United States.

* * * * *

3. Section 89.908 is revised to read as follows:

§ 89.908 National security exemption.

(a)(1) Any nonroad engine, otherwise subject to this part, which is used in a vehicle that exhibits substantial features ordinarily associated with military combat such as armor and/or permanently affixed weaponry and which will be owned and/or used by an agency of the federal government with responsibility for national defense, will be considered exempt from these regulations for purposes of national security. No request for exemption is necessary.

(2) Manufacturers may request a national security exemption for any nonroad engine, otherwise subject to this part, which does not meet the conditions described in paragraph (a)(1) of this section. A manufacturer requesting a national security exemption must state the purpose for which the exemption is required and the request must be endorsed by an agency of the federal government charged with responsibility for national defense.

(b) EPA will maintain a list of models of nonroad engines (and the vehicles which use them) that have been granted a national security exemption under paragraph (a)(2) of this section. This list will be available to the public and may be obtained by writing to the following address: Group Manager, Engine Compliance Programs Group, Engine Programs and Compliance Division (6403J) Environmental Protection Agency, 401 M Street SW, Washington, DC 20460.

PART 90—[AMENDED]

4. The authority citation for part 90 continues to read as follows:

Authority: Sections 203, 204, 205, 206, 207, 208, 209, 213, 215, 216, and 301(a) of the Clean Air Act, as amended (42 U.S.C. 7522, 7523, 7524, 7525, 7541, 7542, 7543, 7547, 7549, 7550, and 7601(a)).

5. Section 90.903 is revised to read as follows:

§ 90.903 Exclusions, application of section 216 (10) and (11) of the Act.

(a) For the purpose of determining the applicability of section 216(10) of the Act, an internal combustion engine (including the fuel system) that is not used in a motor vehicle is deemed a nonroad engine, if it meets the definition in subpart A of this part. For the purpose of determining the applicability of section 216(11) of the Act, a vehicle powered by a nonroad engine is deemed a nonroad vehicle, if it meets the definition in subpart A of this part.

(b) EPA will maintain a list of models of nonroad engines and models of nonroad vehicles that have been determined to be excluded because they are used solely for competition. This list will be available to the public and may be obtained by writing to the following address: Group Manager, Engine Compliance Programs Group, Engine Programs and Compliance Division (6403J) Environmental Protection Agency, 401 M Street SW., Washington, DC 20460.

(c) Upon written request with supporting documentation, EPA will make written determinations as to whether certain engines are or are not nonroad engines. Engines that are determined not to be nonroad engines are excluded from regulations under this part.

6. Section 90.908 is revised to read as follows:

§ 90.908 National security exemption.

(a)(1) Any nonroad engine, otherwise subject to this part, which is used in a vehicle or equipment that exhibits substantial features ordinarily associated with military combat such as armor and/or permanently affixed weaponry and which will be owned and/or used by an agency of the federal government with responsibility for national defense, will be considered exempt from this part for purposes of national security. No request for exemption is necessary.

(2) Manufacturers may request a national security exemption for any nonroad engine, otherwise subject to this part, which does not meet the conditions described in paragraph (a)(1) of this section. A manufacturer requesting a national security exemption must state the purpose for which the exemption is required and the request must be endorsed by an agency of the federal government charged with responsibility for national defense.

(b) EPA will maintain a list of models of nonroad engines (and the vehicles or equipment which use them) that have been granted a national security exemption under paragraph (a)(2) of this section. This list will be available to the public and may be obtained by writing to the following address: Group Manager, Engine Compliance Programs Group, Engine Programs and Compliance Division (6403J) Environmental Protection Agency, 401 M Street SW., Washington, DC 20460.

7. Part 91 is added to read as follows:

PART 91—CONTROL OF EMISSIONS FROM MARINE SPARK-IGNITION ENGINES

Subpart A—General

Sec.

91.1 Applicability.
91.2 Applicable date.
91.3 Definitions.
91.4 Acronyms and abbreviations.
91.5 Table and figure numbering; position.
91.6 Reference materials.
91.7 Treatment of confidential information.

Subpart B—Emission Standards and Certification Provisions

91.101 Applicability.
91.102 Definitions.
91.103 Averaging, banking, and trading of exhaust emission credits.
91.104 Exhaust emission standards for outboard and personal watercraft engines.
91.105 Useful life period, recall, and warranty periods.
91.106 Certificate of conformity.
91.107 Application for certification.
91.108 Certification.
91.109 Requirement of certification—closed crankcase.
91.110 Requirement of certification—prohibited controls.
91.111 Requirement of certification—prohibition of defeat devices.
91.112 Requirement of certification—adjustable parameters.
91.113 Requirement of certification—emission control information label and engine identification number.

91.114 Requirement of certification—supplying production engines upon request.
91.115 Certification procedure—determining engine power and engine families.
91.116 Certification procedure—test engine selection.
91.117 Certification procedure—service accumulation.
91.118 Certification procedure—testing.
91.119 Certification procedure—use of special test procedures.
91.120 Compliance with Family Emission Limits over useful life.
91.121 Certification procedure—recordkeeping.
91.122 Amending the application and certificate of conformity.
91.123 Denial, revocation of certificate of conformity.
91.124 Request for hearing.
91.125 Hearing procedures.
91.126 Right of entry and access.

Subpart C—Averaging, Banking, and Trading Provisions

91.201 Applicability.
91.202 Definitions.
91.203 General provisions.
91.204 Averaging.
91.205 Banking.
91.206 Trading.
91.207 Credit calculation and manufacturer compliance with emission standards.
91.208 Certification.
91.209 Maintenance of records.
91.210 End-of-year and final reports.
91.211 Notice of opportunity for hearing.

Subpart D—Emission Test Equipment Provisions

91.301 Scope; applicability.
91.302 Definitions.
91.303 Acronyms and abbreviations.
91.304 Test equipment overview.
91.305 Dynamometer specifications and calibration accuracy.
91.306 Dynamometer torque cell calibration.
91.307 Engine cooling system.
91.308 Lubricating oil and test fuel.
91.309 Engine intake air temperature measurement.
91.310 Engine intake air humidity measurement.
91.311 Test conditions.
91.312 Analytical gases.
91.313 Analyzers required.
91.314 Analyzer accuracy and specifications.
91.315 Analyzer initial calibration.
91.316 Hydrocarbon analyzer calibration.
91.317 Carbon monoxide analyzer calibration.
91.318 Oxides of nitrogen analyzer calibration.
91.319 NO_X converter check.
91.320 Carbon dioxide analyzer calibration.
91.321 NDIR analyzer calibration.
91.322 Calibration of other equipment.
91.323 Analyzer bench checks.
91.324 Analyzer leakage check.
91.325 Analyzer interference checks.
Appendix A to Subpart D of Part 91—Tables
91.326 Pre- and post-test analyzer calibration.
91.327 Sampling system requirements.
91.328 Measurement equipment accuracy/calibration frequency table.
91.329 Catalyst thermal stress test.
Appendix B to Subpart D of Part 91—Figures

Subpart E—Gaseous Exhaust Test Procedures

91.401 Scope; applicability.
91.402 Definitions.
91.403 Symbols and abbreviations.
91.404 Test procedure overview.
91.405 Recorded information.
91.406 Engine parameters to be measured and recorded.
91.407 Engine inlet and exhaust systems.
91.408 Pre-test procedures.
91.409 Engine dynamometer test run.
91.410 Engine test cycle.
91.411 Post-test analyzer procedures.
91.412 Data logging.
91.413 Exhaust sample procedure—gaseous components.
91.414 Raw gaseous exhaust sampling and analytical system description.
91.415 Raw gaseous sampling procedures.
91.416 Intake air flow measurement specifications.
91.417 Fuel flow measurement specifications.
91.418 Data evaluation for gaseous emissions.
91.419 Raw emission sampling calculations.
91.420 CVS concept of exhaust gas sampling system.
91.421 Dilute gaseous exhaust sampling and analytical system description.
91.423 Exhaust gas analytical system; CVS grab sample.
91.424 Dilute sampling procedure—CVS calibration.
91.425 CVS calibration frequency.
91.426 Dilute emission sampling calculations.
91.427 Catalyst thermal stress resistance evaluation.
Appendix A to Subpart E of Part 91—Tables
Appendix B to Subpart E of Part 91—Figures

Subpart F—Manufacturer Production Line Testing Program

91.501 Applicability.
91.502 Definitions.
91.503 Production Line Testing by the Manufacturer.
91.504 Maintenance of records; submittal of information.
91.505 Right of entry and access.
91.506 Engine sample selection.
91.507 Test procedures.
91.508 Cumulative Sum (CumSum) Procedure.
91.509 Calculation and reporting of test results.
91.510 Compliance with criteria for production line testing.
91.511 Suspension and revocation of certificates of conformity.
91.512 Request for public hearing.
91.513 Administrative procedures for public hearing.
91.514 Hearing procedures.
91.515 Appeal of hearing decision.
91.516 Treatment of confidential information.

Subpart G—Selective Enforcement Auditing Regulations

91.601 Applicability.
91.602 Definitions.
91.603 Applicability of part 91, subpart F.
91.604 Test orders.
91.605 Testing by the Administrator.
91.606 Sample selection.
91.607 Test procedures.
91.608 Compliance with acceptable quality level and passing and failing criteria for selective enforcement audits.
Appendix A to Subpart G of Part 91—Sampling Plans for Selective Enforcement Auditing of Marine Engines

Subpart H—Importation of Nonconforming Marine Engines

91.701 Applicability...
91.702 Definitions.
91.703 Admission.
91.704 Exemptions and exclusions.
91.705 Prohibited acts; penalties.
91.706 Treatment of confidential information.

Subpart I—In-Use Testing and Recall Regulations

91.801 Applicability.
91.802 Definitions.
91.803 Manufacturer in-use testing program.
91.804 Maintenance, procurement and testing of in-use engines.
91.805 In-use test program reporting requirements.
91.806 Voluntary emissions recall.

Subpart J—Emission-Related Defect Reporting Requirements, Voluntary Emission Recall Program

91.901 Applicability.
91.902 Definitions.
91.903 Applicability to Part 85, subpart T.
91.904 Voluntary emission recall.
91.905 Reports, voluntary recall plan filing, record retention.
91.906 Responsibility under other legal provisions preserved.
91.907 Disclaimer of production warranty applicability.

Subpart K—Exclusion and Exemption of Marine SI Engines

91.1001 Applicability.
91.1002 Definitions.
91.1003 Exclusions based on section 216(10) of the Act.
91.1004 Who may request an exemption.
91.1005 Testing exemption.
91.1006 Manufacturer-owned exemption and precertification exemption.
91.1007 Display exemption.
91.1008 National security exemption.
91.1009 Export exemptions.
91.1010 Granting of exemptions.
91.1011 Submission of exemption requests.
91.1012 Treatment of confidential information.

Subpart L—Prohibited Acts and General Enforcement Provisions

91.1101 Applicability.
91.1102 Definitions.
91.1103 Prohibited acts.
91.1104 General enforcement provisions.

91.1105 Injunction proceedings for prohibited acts.
91.1106 Penalties.
91.1107 Warranty provisions.
91.1108 In-use compliance provisions.

Subpart M—Emission Warranty and Maintenance Instructions

91.1201 Applicability.
91.1202 Definitions.
91.1203 Emission warranty, warranty period.
91.1204 Furnishing of maintenance and use instructions to ultimate purchaser.

Subpart N—In-Use Credit Program for New Marine Engines

91.1301 Applicability.
91.1302 Definitions.
91.1303 General provisions.
91.1304 Averaging.
91.1305 Banking.
91.1306 Trading.
91.1307 Credit calculation.
91.1308 Maintenance of records.
91.1309 Reporting requirements.
91.1310 Notice of opportunity for hearing.

Authority: Secs. 203, 204, 205, 206, 207, 208, 209, 213, 215, 216, and 301(a) of the Clean Air Act, as amended (42 U.S.C. 7522, 7523, 7524, 7525, 7541, 7542, 7543, 7547, 7549, 7550, and 7601(a)).

Subpart A—General

§ 91.1 Applicability.

(a) This part and all its subparts apply to marine spark-ignition engines used to propel marine vessels as defined in the General Provisions of the United States Code, 1 U.S.C.3 (1992), unless otherwise indicated.

(b) Sterndrive and inboard engines are exempt from this part.

(c) Existing technology OB/PWC are exempt from § 91.112 and subparts D, E, F, G, I (§§ 91.803 through 91.805), J, M and N through model year 2003.

§ 91.2 Applicable date.

This part applies to marine spark-ignition engines beginning with the 1998 model year, except where otherwise specified.

§ 91.3 Definitions.

The following definitions apply to this part 91. All terms not defined herein have the meaning given them in the Act.

Act means the Clean Air Act, as amended, 42 U.S.C. 7401 *et.seq.*

Adjustable parameter means any device, system, or element of design which is physically capable of being adjusted (including those which are difficult to access) and which, if adjusted, may affect emissions or engine performance during emission testing or normal in-use operation.

Administrator means the Administrator of the Environmental Protection Agency or his or her authorized representative.

Auxiliary emission control device means any element of design that senses temperature, engine speed, engine RPM, transmission gear, or any other parameter for the purpose of activating, modulating, delaying, or deactivating the operation of any part of the emission control system.

Certification means, with respect to new SI marine engines, obtaining a certificate of conformity for an engine family complying with the marine SI engine emission standards and requirements specified in this part.

Emission control system means any device, system, or element of design which controls or reduces the emission of substances from an engine.

Engine as used in this part, refers to marine SI engine.

Engine family means a group of engines, as specified in § 91.115.

EPA enforcement officer means any officer, employee, or authorized representative of the U.S. Environmental Protection Agency so designated in writing by the Administrator (or by his or her designee).

Exhaust emissions means matter emitted into the atmosphere from any opening downstream from the exhaust port of a marine engine.

Existing technology OB/PWC means an outboard engine or a personal watercraft engine which was in production for the 1997 or any previous model years and that did not utilize newer technologies such as four-stroke technology, direct-injection two-stroke technology, catalyst technology, or other technology used to comply with emission standards which the Administrator determines is a new type of OB/PWC technology.

Family Emission Limit (FEL) means an emission level that is declared by the manufacturer to serve in lieu of an emission standard for certification and for the averaging, banking, and trading program. A FEL must be expressed to the same number of decimal places as the applicable emission standard.

Fuel system means all components involved in the transport, metering, and mixture of the fuel from the fuel tank to the combustion chamber(s) including the following: Fuel tank, fuel tank cap, fuel pump, fuel lines, oil injection metering system, carburetor or fuel injection components, and all fuel system vents.

Gross power means the power measured at the crankshaft or its equivalent (for outboards, the power may be measured at the propeller shaft), the engine being equipped only with the standard accessories (such as oil pumps, coolant pumps, and so forth) necessary for its operation on the test bed.

Identification number means a unique specification (for example, model number/serial number combination) which allows a particular marine SI engine to be distinguished from other similar engines.

Inboard engine means a four stroke marine SI engine that is designed such that the propeller shaft penetrates the hull of the marine vessel while the engine and the remainder of the drive unit is internal to the hull of the marine vessel.

Marine spark-ignition engine means any engine used to propel a marine vessel, which utilizes the spark-ignition combustion cycle.

Marine engine manufacturer means any person engaged in the manufacturing or assembling of new marine SI engines or the importing of such engines for resale, or who acts for and is under the control of any such person in connection with the distribution of such engines. A marine SI engine manufacturer does not include any dealer with respect to new marine SI engines received by such person in commerce.

Marine vessel means every description of watercraft or another artificial contrivance used, or capable of being used, as a means of transportation on water, as defined in 1 U.S.C. 3 (1992).

Marine vessel manufacturer means any person engaged in the manufacturing or assembling of new marine vessels or importing such marine vessels for resale, or who acts for and is under the control of any such person in connection with the distribution of such vehicles. A marine vessel manufacturer does not include any dealer with respect to new marine vessels received by such person in commerce.

Model year means the manufacturer's annual new model production period which includes January 1 of the calendar year for which the model year is named, ends no later than December 31 of the calendar year, and does not begin earlier than January 2 of the previous calendar year. Where a manufacturer has no annual new model production period, model year means the calendar year.

New, for purposes of this part, means a nonroad engine, nonroad vehicle, or nonroad equipment the equitable or legal title to which has never been transferred to an ultimate purchaser. Where the equitable or legal title to the engine, vehicle or equipment is not transferred to an ultimate purchaser

until after the engine, vehicle, or equipment is placed into service, then the engine, vehicle, or equipment will no longer be new after it is placed into service. A nonroad engine, vehicle, or equipment is placed into service when it is used for its functional purposes. With respect to imported nonroad engines, nonroad vehicles, or nonroad equipment, the term ''new'' means an engine, vehicle, or piece of equipment that is not covered by a certificate of conformity issued under this part at the time of importation, and that is manufactured after the effective date of a regulation issued under this part which is applicable to such engine, vehicle, or equipment, or which would be applicable to such engine, vehicle, or equipment had it been manufactured for importation into the United States.

Nonroad engine has the meaning as defined in 40 CFR 89.2.

Nonroad vehicle has the meaning as defined in 40 CFR 89.2.

Nonroad equipment has the meaning as defined in 40 CFR 89.2.

Operating hours means:

(1) For engine storage areas or facilities, all times during which personnel other than custodial personnel are at work in the vicinity of the storage area or facility and have access to it.

(2) For all other areas or facilities, all times during which an assembly line is in operation or all times during which testing, maintenance, service accumulation, production or compilation of records, or any other procedure or activity related to certification testing, to translation of designs from the test stage to the production stage, or to engine manufacture or assembly is being carried out in a facility.

Outboard engine is a marine SI engine that, when properly mounted on a marine vessel in the position to operate, houses the engine and drive unit external to the hull of the marine vessel.

Personal watercraft engine (PWC) is a marine SI engine that does not meet the definition of outboard engine, inboard engine or sterndrive engine, except that the Administrator in his or her discretion may classify a PWC as an inboard or sterndrive engine if it is comparable in technology and emissions to an inboard or sterndrive engine.

Presentation of credentials means the display of the document designating a person as an EPA enforcement officer or EPA authorized representative.

Scheduled maintenance means any adjustment, repair, removal, disassembly, cleaning, or replacement of components or systems required by the manufacturer to be performed on a periodic basis to prevent part failure or marine vessel or engine malfunction, or those actions anticipated as necessary to correct an overt indication of malfunction or failure for which periodic maintenance is not appropriate.

Sterndrive engine means a four stroke marine SI engine that is designed such that the drive unit is external to the hull of the marine vessel, while the engine is internal to the hull of the marine vessel.

Test engine means the engine or group of engines that a manufacturer uses during certification, production line and in-use testing to determine compliance with emission standards.

Ultimate purchaser means, with respect to any new marine SI engine the first person who in good faith purchases such new marine SI engine for purposes other than resale.

Used solely for competition means exhibiting features that are not easily removed and that would render its use other than in competition unsafe, impractical, or highly unlikely.

Warranty period means the period of time the engine or part is covered by the warranty provisions.

§ 91.4 Acronyms and abbreviations.

The following acronyms and abbreviations apply to this part 91.

AECD—Auxiliary emission control device
ASME—American Society of Mechanical Engineers
ASTM—American Society for Testing and Materials
CAA—Clean Air Act
CAAA—Clean Air Act Amendments of 1990
CLD—chemiluminescent detector
CO—Carbon monoxide
CO_2—Carbon dioxide
EPA—Environmental Protection Agency
FEL—Family Emission Limit
g/kw-hr—grams per kilowatt hour
HC—hydrocarbons
HCLD—heated chemiluminescent detector
HFID—heated flame ionization detector
ICI—Independent Commercial Importer
MY—Model Year
NDIR—non-dispersive infrared analyzer
NIST—National Institute for Standards and Testing
NO—Nitric oxide
NO_2—Nitrogen dioxide
NO_X—Oxides of nitrogen
OB—Outboard engine
O_2—Oxygen
OEM—Original engine manufacturer
PMD—paramagnetic detector
PWC—personal watercraft
RPM—revolutions per minute
SAE—Society of Automotive Engineers
SEA—Selective Enforcement Auditing
SI—Spark-ignition
U.S.C.—United States Code
VOC—Volatile organic compounds
ZROD—zirconium dioxide sensor

§ 91.5 Table and figure numbering; position.

(a) Tables for each subpart appear in an appendix at the end of the subpart. Tables are numbered consecutively by order of appearance in the appendix. The table title will indicate the topic.

(b) Figures for each subpart appear in an appendix at the end of the subpart. Figures are numbered consecutively by order or appearance in the appendix. The figure title will indicate the topic.

§ 91.6 Reference materials.

(a) *Incorporation by reference.* The documents in paragraph (b) of this section have been incorporated by reference. The incorporation by reference was approved by the Director of the Federal Register in accordance with 5 U.S.C. 552(a) and 1 CFR part 51. Copies may be inspected at U.S. EPA, OAR, Air and Radiation Docket and Information Center, 401 M Street, SW., Washington, DC 20460, or at the Office of the Federal Register, 800 N. Capitol St. NW., 7th Floor, Suite 700, Washington, DC 20001.

(b) The following paragraphs and tables set forth the material that has been incorporated by reference in this part.

(1) *ASTM material.* The following table sets forth material from the American Society for Testing and Materials which has been incorporated by reference. The first column lists the number and name of the material. The second column lists the section(s) of this part, other than § 91.6, in which the matter is referenced. The second column is presented for information only and may not be all inclusive. Copies of these materials may be obtained from American Society for Testing and Materials, 1916 Race St., Philadelphia, PA 19103.

Document number and name	40 CFR part 91 reference
ASTM D86–93:	
Standard Test Method for Distillation of Petroleum Products	Appendix A to Subpart D.
ASTM D323–90:	
Standard Test Method for Vapor Pressure of Petroleum Products (Reid Method)	Appendix A to Subpart D.
ASTM D1319–93:	
Standard Test Method for Hydrocarbon Types in Liquid Petroleum Products by Fluorescent Indicator Adsorption.	Appendix A to Subpart D.
ASTM D2622–92:	
Standard Test Method for Sulfur in Petroleum Products by X-Ray Spectrometry	Appendix A to Subpart D.
ASTM D2699–92:	
Standard Test Method for Knock Characteristics of Motor Fuels by the Research Method	Appendix A to Subpart D.
ASTM D2700–92:	
Standard Test Method for Knock Characteristics of Motor and Aviation Fuels by the Motor Method	Appendix A to Subpart D.
ASTM D3231–89:	
Standard Test Method for Phosphorus in Gasoline	Appendix A to Subpart D.
ASTM D3606–92:	
Standard Test Method for Determination of Benzene and Toluene in Finished Motor and Aviation Gasoline by Gas Chromatography.	Appendix A to Subpart D.
ASTM E29–93a:	
Standard Practice for Using Significant Digits in Test Data to Determine Conformance with Specifications.	91.207; 91.120; 91.509; 91.1307.

(2) *SAE material.* The following table sets forth material from the Society of Automotive Engineers which has been incorporated by reference. The first column lists the number and name of the material. The second column lists the section(s) of this part, other than § 91.7, in which the matter is referenced. The second column is presented for information only and may not be all inclusive. Copies of these materials may be obtained from Society of Automotive Engineers International, 400 Commonwealth Dr., Warrendale, PA 15096–0001.

Document number and name	40 CFR part 91 reference
SAE J1228/ISO 8665 November 1991 Small Craft-Marine Propulsion Engine and Systems-Power Measurements and Declarations.	91.104, 91.115; 91.118; 91.207; 91.1307.
SAE J1930 June 1993 Electrical/Electronic Systems Diagnostic Terms, Definitions, Abbreviations and Acronyms.	91.113.
SAE Paper 770141 Optimization of a Flame Ionization Detector for Determination of Hydrocarbon in Diluted Automotive Exhausts, Glenn D. Reschke, 1977.	91.316

§ 91.7 Treatment of confidential information.

(a) Any manufacturer may assert that some or all of the information submitted pursuant to this part is entitled to confidential treatment as provided by part 2, subpart B, of this chapter.

(b) Any claim of confidentiality must accompany the information at the time it is submitted to EPA.

(c) To assert that information submitted pursuant to this subpart is confidential, a manufacturer must indicate clearly the items of information claimed confidential by marking, circling, bracketing, stamping, or otherwise specifying the confidential information. Furthermore, EPA requests, but does not require, that the submitter also provide a second copy of its submittal from which all confidential information has been deleted. If a need arises to publicly release nonconfidential information, EPA will assume that the submitter has accurately deleted the confidential information from this second copy.

(d) If a claim is made that some or all of the information submitted pursuant to this subpart is entitled to confidential treatment, the information covered by that confidentiality claim will be disclosed by the Administrator only to the extent and by means of the procedures set forth in part 2, subpart B, of this chapter.

(e) Information provided without a claim of confidentiality at the time of submission may be made available to the public by EPA without further notice to the submitter, in accordance with § 2.204(c)(2)(i)(A) of this chapter.

Subpart B—Emission Standards and Certification Provisions

§ 91.101 Applicability.

The requirements of this subpart B are applicable to all new marine spark-ignition engines subject to the provisions of subpart A of this part 91.

§ 91.102 Definitions.

The definitions in subpart A of this part 91 apply to this subpart. All terms not defined herein or in subpart A of this part have the meaning given them in the Act.

§ 91.103 Averaging, banking, and trading of exhaust emission credits.

Regulations regarding averaging, banking, and trading provisions along with applicable recordkeeping requirements are found in subpart C of this part.

§ 91.104 Exhaust emission standards for outboard and personal watercraft engines.

(a) New marine spark-ignition outboard and personal watercraft engines for use in the U.S. must meet the following exhaust emission standards for $HC+NO_X$. The exhaust emission standard for each model year is provided below. It is also used as input to the calculation procedure in § 91.207 to determine compliance with the corporate average $HC+NO_X$ exhaust emission standard.

HYDROCARBON PLUS OXIDES OF NITROGEN EXHAUST EMISSION STANDARDS

[grams per kilowatt-hour]

Model year	P < 4.3 kW HC+NO_X emission standard by model year	P > 4.3 kW HC+NO_X emission standard by model year
1998	278.00	$(0.917 \times (151 + 557/P^{0.9})) + 2.44$
1999	253.00	$(0.833 \times (151 + 557/P^{0.9})) + 2.89$
2000	228.00	$(0.750 \times (151 + 557/P^{0.9})) + 3.33$
2001	204.00	$(0.667 \times (151 + 557/P^{0.9})) + 3.78$
2002	179.00	$(0.583 \times (151 + 557/P^{0.9})) + 4.22$
2003	155.00	$(0.500 \times (151 + 557/P^{0.9})) + 4.67$
2004	130.00	$(0.417 \times (151 + 557/P^{0.9})) + 5.11$
2005	105.00	$(0.333 \times (151 + 557/P^{0.9})) + 5.56$
2006 and later	81.00	$(0.250 \times (151 + 557/P^{0.9})) + 6.00$

where:

P = the average power of an engine family in kW (sales weighted). The power of each configuration is the rated output in kilowatts as determined by SAE J1228. This procedure has been incorporated by reference. See § 91.6.

(b) Exhaust emissions are measured using the procedures set forth in subpart E of this part.

(c) Manufacturers must designate a Family Emission Limit (FEL) for HC+NO_X for every engine family. The FEL may be equal to the emission standard in paragraph (a) of this section. The FEL established through certification serves as the emission standard for the engine family and emissions may not exceed the FEL levels for HC+NO_X for all engines sold in the engine family, for their useful life.

(d) A manufacturer must comply with a corporate average HC+NO_X emission standard as determined in accordance with subpart C § 91.207.

§ 91.105 Useful life period, recall, and warranty periods.

(a) The useful life for PWC engines is a period of 350 hours of operation or 5 years of use, whichever first occurs. The useful life for Outboard marine spark-ignition engines is a period of 350 hours of operation or 10 years of use, whichever first occurs.

(b) PWC engines are subject to recall testing for a period of 350 hours of operation or 5 years of use, whichever first occurs. Outboard marine spark-ignition engines are subject to recall testing for a period of 350 hours of operation or 10 years of use, whichever first occurs. However, for purposes of this part only, if the Administrator should issue a nonconformity determination, then only those engines that are within the useful life as of the date of the nonconformity determination are subject to recall repair requirements.

(c) Warranty periods are set out in subpart M of this part.

§ 91.106 Certificate of conformity.

(a) Every manufacturer of a new marine SI engine produced during or after the 1998 model year for outboard engines and the 1999 model year for PWC engines, must obtain a certificate of conformity covering each engine family. The certificate of conformity must be obtained from the Administrator prior to selling, offering for sale, introducing into commerce, or importing into the United States the new marine SI engine.

(b) The certificate of conformity is valid for the model year for which it is designated.

§ 91.107 Application for certification.

(a) For each engine family, the engine manufacturer must submit to the Administrator a completed application for a certificate of conformity, except that with respect to an existing technology OB/PWC engine a manufacturer may, in lieu of providing such application, submit to the Administrator summary testing and other information as determined by the Administrator.

(b) The application must be approved and signed by the authorized representative of the manufacturer.

(c) The application must be updated and corrected by amendment as provided in § 91.122 to accurately reflect the manufacturer's production.

(d) Required content. Each application must include the following information:

(1) A description of the basic engine design including, but not limited to, the engine family specifications;

(2) An explanation of how the emission control system operates, including a detailed description of all emission control system components (detailed component calibrations are not required to be included, however they must be provided if requested), each auxiliary emission control device (AECD), and all fuel system components to be installed on any production or test engine(s);

(3) Proposed test fleet selection and the rationale for the test fleet selection;

(4) Special or alternative test procedures, if applicable;

(5) The description of the operating cycle and the service accumulation period necessary to break in the test engine(s) and stabilize emission levels and any maintenance scheduled;

(6) A description of all adjustable operating parameters, including the following:

(i) The nominal or recommended setting and the associated production tolerances;

(ii) The intended physically adjustable range;

(iii) The limits or stops used to establish adjustable ranges;

(iv) Production tolerances of the limits or stops used to establish each physically adjustable range; and

(v) Information relating to why the physical limits or stops used to establish the physically adjustable range of each parameter, or any other means used to inhibit adjustment, are effective in preventing adjustment of parameters to settings outside the manufacturer's intended physically adjustable ranges on in-use engines;

(7) Regarding the averaging, banking, and trading provisions, the information specified in § 91.208;

(8) The proposed maintenance and use instructions the manufacturer will furnish to the ultimate purchaser of each new engine and the proposed emission control label;

(9) all test data, for HC, CO and NO_X, obtained by the manufacturer on each test engine;

(10) a statement that the test engine(s), as described in the manufacturer's application for certification, has been tested in accordance with the applicable test procedures, utilizing the fuels and equipment described in the application,

and that on the basis of such tests the engine(s) conforms to the requirements of this part; and

(11) an unconditional statement certifying that all engines in the engine family comply with all requirements of this part and the Clean Air Act.

(e) At the Administrator's request, the manufacturer must supply such additional information as may be required to evaluate the application including, but not limited to, projected marine SI engine production.

(f) (1) The Administrator may modify the information submission requirements of paragraph (d) of this section, provided the information specified therein is maintained by the engine manufacturer as required by § 91.121, and amended, updated, or corrected as necessary.

(2) For the purposes of this paragraph, § 91.121(a)(1) includes all information specified in paragraph (d) of this section whether or not such information is actually submitted to the Administrator for any particular model year.

(3) The Administrator may review an engine manufacturer's records at any time.

§ 91.108 Certification.

(a) If, after a review of the manufacturer's submitted application, or with respect to an existing technology OB/PWC engine manufacturer's summary information submitted pursuant to § 91.107(a), information obtained from any inspection, and such other information as the Administrator may require, the Administrator determines that the application or summary information is complete and that the engine family meets the requirements of this part and the Clean Air Act, the Administrator shall issue a certificate of conformity for the engine family.

(b) The Administrator shall give a written explanation when certification is denied. The manufacturer may request a hearing on a denial. (*See* § 91.124 for procedure.)

§ 91.109 Requirement of certification—closed crankcase.

(a) An engine's crankcase must be closed.

(b) For purposes of this section, ''crankcase'' means the housing for the crankshaft and other related internal parts.

§ 91.110 Requirement of certification—prohibited controls.

(a) An engine may not be equipped with an emission control device, system, or element of design for the purpose of complying with emission standards if such device, system, or element of design will cause or contribute to an unreasonable risk to public health, welfare, or safety in its operation or function.

(b) An engine with an emission control device, system, or element of design may not emit any noxious or toxic substance which would not be emitted in the operation of such engine in the absence of the device, system, or element of design except as specifically permitted by regulation.

§ 91.111 Requirement of certification—prohibition of defeat devices.

(a) An engine may not be equipped with a defeat device.

(b) For purposes of this section, ''defeat device'' means any device, system, or element of design which senses operation outside normal emission test conditions and reduces emission control effectiveness.

(1) Defeat device includes any auxiliary emission control device (AECD) that reduces the effectiveness of the emission control system under conditions which may reasonably be expected to be encountered in normal operation and use, unless such conditions are included in the test procedure.

(2) Defeat device does not include such items which either operate only during engine starting or are necessary to protect the engine (or vehicle or equipment in which it is installed) against damage or accident during its operation.

§ 91.112 Requirement of certification—adjustable parameters.

(a) Engines equipped with adjustable parameters must comply with all requirements of this subpart for any adjustment in the physically available range.

(b) An operating parameter is not considered adjustable if it is permanently sealed by the manufacturer or otherwise not normally accessible using ordinary tools.

(c) The Administrator may require that adjustable parameters be set to any specification within the adjustable range during certification, production line testing, selective enforcement auditing or any in-use testing to determine compliance with the requirements of this part.

§ 91.113 Requirement of certification—emission control information label and engine identification number.

(a) The engine manufacturer must affix at the time of manufacture a permanent and legible label identifying each engine. The label must meet the following requirements:

(1) Be attached in such a manner that it cannot be removed without destroying or defacing the label;

(2) Be durable and readable for the entire engine life;

(3) Be secured to an engine part necessary for normal engine operation and not normally requiring replacement during engine life;

(4) Be written in English; and

(5) Be located so as to be readily visible to the average person after the engine is installed in the marine vessel.

(b) If the marine vessel obscures the label on the engine, the marine vessel manufacturer must attach a supplemental label so that this label is readily visible to the average person. The supplemental label must:

(1) Be attached in such a manner that it cannot be removed without destroying or defacing the label;

(2) Be secured to a marine vessel part necessary for normal operation and not normally requiring replacement during the marine vessel life; and

(3) Be identical to the label which was obscured.

(c) The label must contain the following information:

(1) The heading ''Emission Control Information;''

(2) The full corporate name and trademark of the engine manufacturer;

(3) The statement, ''This (vessel's engine or engine, as applicable) is certified to operate on (specify operating fuel(s));''

(4) Identification of the Exhaust Emission Control System (Abbreviations may be used and must conform to the nomenclature and abbreviations provided in SAE J1930. This procedure has been incorporated by reference. *See* § 91.6.;

(5) All engine lubricant requirements;

(6) date of manufacture [day(optional), month and year];

(7) The statement ''This engine conforms to [model year] U.S. EPA regulations for marine SI engines.'';

(8) Family Emission Limits (FELs);

(9) EPA standardized engine family designation;

(10) Engine displacement [in cubic centimeters]; and

(11) Advertised power;

(12) Engine tuneup specifications and adjustments. These should indicate the proper transmission position during tuneup, and accessories, if any, that should be in operation;

(13) Fuel requirements;

(14) Other information concerning proper maintenance and use or indicating compliance or noncompliance with other standards may be indicated on the label.

(d) If there is insufficient space on the engine to accommodate a label

including all the information required in paragraph (c) of this section, the manufacturer may delete or alter the label as indicated in this paragraph. The information deleted from the label must appear in the owner's manual.

(1) Exclude the information required in paragraphs (c) (3), (4), and (5) of this section. The fuel or lubricant may be specified elsewhere on the equipment.

(2) Exclude the information required by paragraph (c)(6) of this section, if the date the engine was manufactured is stamped on the engine.

(3) For existing technology OB/PWC only, exclude the information required by paragraphs (c) (10), (11), (13), and (14) of this section.

(e) The Administrator may, upon request, waive or modify the label content requirements of paragraphs (c) and (d) of this section, provided that the intent of such requirements is met.

(f) Engine Identification Number. Each engine must have a legible, unique engine identification number permanently affixed to or engraved on the engine.

§ 91.114 Requirement of certification—supplying production engines upon request.

Upon the Administrator's request, the manufacturer must supply a reasonable number of production engines for testing and evaluation. These engines must be representative of typical production and supplied for testing at such time and place and for such reasonable periods as the Administrator may require.

§ 91.115 Certification procedure—determining engine power and engine families.

(a) Engine power must be calculated using SAE J1228. This procedure has been incorporated by reference. *See* § 91.6.

(b) The manufacturer's product line must be divided into engine families as specified by paragraph (c) of this section, comprised of engines expected to have similar emission characteristics throughout their useful life periods.

(c) To be classed in the same engine family, engines must be identical in all of the following applicable respects:

(1) The combustion cycle;

(2) The cooling mechanism;

(3) The cylinder configuration (inline, vee, opposed, bore spacings, and so forth);

(4) The number of cylinders;

(5) The number of catalytic converters, location; volume, and composition; and

(6) The thermal reactor characteristics.

(d) At the manufacturer's request, engines identical in all the respects listed in paragraph (c) of this section may be further divided into different engine families if the Administrator determines that they may be expected to have different emission characteristics. This determination is based upon the consideration of features such as:

(1) The bore and stroke;

(2) The combustion chamber configuration;

(3) The intake and exhaust timing method of actuation (poppet valve, reed valve, rotary valve, and so forth);

(4) The intake and exhaust valve or port sizes, as applicable;

(5) The fuel system;

(6) The exhaust system; and

(7) The method of air aspiration.

(e) Where engines are of a type which cannot be divided into engine families based upon the criteria listed in paragraph (c) of this section, the Administrator shall establish families for those engines based upon the features most related to their emission characteristics.

(f) Upon a showing by the manufacturer that the emission characteristics during the useful life are expected to be similar, engines differing in one or more of the characteristics in paragraph (c) of this section may be grouped in the same engine family.

(g) Upon a showing by the manufacturer that the emission characteristics during the useful life are expected to be dissimilar, engines identical in all the characteristics in paragraph (c) of this section may be divided into separate engine families.

§ 91.116 Certification procedure—test engine selection.

(a) The manufacturer must select, from each engine family, a test engine of a configuration that the manufacturer deems to be most likely to exceed the Family Emission Limit (FEL).

(b) At the manufacturer's option, the criterion for selecting the worst case engine may be that engine configuration which has the highest weighted brake-specific fuel consumption over the appropriate engine test cycle.

(c) The test engine must be constructed to be representative of production engines.

§ 91.117 Certification procedure—service accumulation.

(a)(1) Any engine required to be tested under § 91.118 must be operated with all emission control systems operating properly for a period sufficient to stabilize emissions prior to such testing.

(2) A manufacturer may elect to consider emission levels as stabilized when the test engine has accumulated 12 hours of service.

(b) No maintenance, other than recommended lubrication and filter changes, may be performed during service accumulation without the Administrator's approval.

(c) Service accumulation is to be performed in a manner using good engineering judgment to ensure that emissions are representative of production engines.

(d) The manufacturer must maintain, and provide to the Administrator if requested, records stating the rationale for selecting a service accumulation period different than 12 hours and records describing the method used to accumulate hours on the test engine(s).

§ 91.118 Certification procedure—testing.

(a) *Manufacturer testing.* The manufacturer must test the test engine using the specified test procedures and appropriate test cycle. All test results must be reported to the Administrator.

(1) The test procedures to be used are detailed in subpart E of this part.

(2) Emission test equipment provisions are described in subpart D of this part.

(b) *Administrator testing.* (1) The Administrator may require that any one or more of the test engines be submitted to the Administrator, at such place or places as the Administrator may designate, for the purposes of conducting emission tests. The Administrator may specify that testing will be conducted at the manufacturer's facility, in which case instrumentation and equipment specified by the Administrator must be made available by the manufacturer for test operations. Any testing conducted at a manufacturer's facility must be scheduled by the manufacturer as promptly as possible.

(2)(i) Whenever the Administrator conducts a test on a test engine, the results of that test will, unless subsequently invalidated by the Administrator, comprise the official data for the engine and the manufacturer's data will not be used in determining compliance with the Family Emission Limit (FEL).

(ii) Prior to the performance of such a test, the Administrator may adjust or cause to be adjusted any adjustable parameter of the test engine which the Administrator has determined to be subject to adjustment for testing, to any setting within the physically adjustable range of that parameter, to determine whether the engine conforms to the applicable Family Emission Limit (FEL).

(iii) For those engine parameters which the Administrator has not

determined to be subject to adjustment for testing, the test engine presented to the Administrator for testing will be calibrated within the production tolerances applicable to the manufacturer specification shown on the engine label, as specified in the application for certification.

(c) *Use of carryover test data.* In lieu of testing, the manufacturer may submit, with the Administrator's approval, emission test data used to certify substantially similar engine families in previous years. This ''carryover'' test data is only allowable if the data shows the test engine would fully comply with the applicable Family Emission Limit (FEL).

(d) *Scheduled maintenance during testing.* No scheduled maintenance may be performed during testing of the engine.

(e) *Unscheduled maintenance on test engines.* (1) Manufacturers may not perform any unscheduled engine, emission control system, or fuel system adjustment, repair, removal, disassembly, cleaning, or replacement on a test engine without the advance approval of the Administrator.

(2) The Administrator may approve such maintenance if:

(i) a preliminary determination has been made that a part failure or system malfunction, or the repair of such failure or malfunction, does not render the engine unrepresentative of engines in use, and does not require direct access to the combustion chamber; and

(ii) a determination has been made that the need for maintenance or repairs is indicated by an overt malfunction such as persistent misfire, engine stall, overheating, fluid leakage, or loss of oil pressure.

(3) Emission measurements may not be used as a means of determining the need for unscheduled maintenance under paragraph (e)(2) of this section.

(4) The Administrator must have the opportunity to verify the extent of any overt indication of part failure (for example, misfire, stall), or an activation of an audible and/or visual signal, prior to the manufacturer performing any maintenance related to such overt indication or signal.

(5) Unless approved by the Administrator prior to use, engine manufacturers may not use any equipment, instruments, or tools to identify malfunctioning, maladjusted, or defective engine components unless the same or equivalent equipment, instruments, or tools are available at dealerships and other service outlets and are used in conjunction with scheduled maintenance on such components.

(6) If the Administrator determines that part failure or system malfunction occurrence and/or repair rendered the engine unrepresentative of production engines, the engine may not be used as a test engine.

(7) Unless waived by the Administrator, complete emission tests are required before and after any engine maintenance which may reasonably be expected to affect emissions.

(f) *Engine failure.* A manufacturer may not use as a test engine any engine which incurs major mechanical failure necessitating disassembly of the engine. This prohibition does not apply to failures which occur after completion of the service accumulation period.

(g) In lieu of providing or generating emission data under this section for existing technology, the Administrator may allow the manufacturer to demonstrate (on the basis of previous emission tests, development tests, or other testing information) that the engine will conform with the applicable FEL.

(h)(1) Manufacturers may select an FEL for existing technology OB/PWC through: (i) model year 2000 based on the function $151+557/P^{0.9}$ where P=average power of an engine family in kW (sales weighted). The power of each configuration is the rated output in kilowatts as determined by SAE J1228. (This procedure has been incorporated by reference. See § 91.6). The certificate of conformity would be conditioned by requirements that the manufacturer submit test data, as determined appropriate by the Administrator under § 91.118(h) by the end of model year 2000; that the FEL is revised and approved by EPA to reflect the test data; that the credits associated with the engine family are recalculated based on the difference between the old FEL and the new FEL; and that the new FEL applies to all engines covered by the certificate of conformity; or

(ii) Model year 2003 based on good engineering judgement.

(2) Upon request by the manufacturer, the Administrator has the discretion to extend the time period set forth in paragraph (h)(1) of this section for a specific engine family up to model year 2005 if the Administrator determines that an engine family will be phased out of U.S. production by model year 2005. As a condition to being granted such an extension, the manufacturer must discontinue U.S. production according to the schedule upon which the Administrator based the extension. Failure to do so by the manufacturer will void the certificate of conformity *ab initio.*

(i) A manufacturer request under paragraph (h)(2) of this section must be in writing and must apply to a specific engine family. The request must identify the engine family designation, the rationale supporting the FEL choice, the type of information used as a basis for the FEL (e.g., previous emission tests, development tests), the specific source of the information including when the information was generated, the schedule for phasing the engine family out of U.S. production, and any other information the Administrator may require.

§ 91.119 Certification procedure—use of special test procedures.

(a) *Use of special test procedures by EPA.* The Administrator may establish special test procedures for any engine that the Administrator determines is not susceptible to satisfactory testing under the specified test procedures set forth in subpart E of this part.

(b) *Use of alternative test procedures by an engine manufacturer.* (1) A manufacturer may elect to use an alternative test procedure provided that it yields results equivalent to the results from the specified test procedure in subpart E, its use is approved in advance by the Administrator, and the basis for equivalent results with the specified test procedures is fully described in the manufacturer's application.

(2) An engine manufacturer electing to use alternate test procedures is solely responsible for the results obtained. The Administrator may reject data generated under test procedures which do not correlate with data generated under the specified procedures.

§ 91.120 Compliance with Family Emission Limits over useful life.

(a) If all test engines representing an engine family have emissions, as determined in paragraph (c)(3)(iii) of this section, less than or equal to the applicable Family Emission Limit (FEL) for each pollutant as determined according to § 91.104 (c), that family complies with the Family Emission Limit .

(b) If any test engine representing an engine family has emissions (as determined in paragraph (c)(3)(iii) of this section, greater than the applicable Family Emission Limit for any pollutant as determined according to § 91.104(c), that family will be deemed not in compliance with the Family Emission Limits.

(c)(1) The engine Family Emission Limits (FELs) apply to the emissions of engines for their useful lives.

(2) Since emission control efficiency generally decreases with the

accumulation of service on the engine, deterioration factors must be used in combination with emission data engine test results as the basis for determining compliance with the standards.

(3)(i) Paragraph (c)(3)(ii) of this section describes the procedure for determining compliance of an engine with family emission limits, based on deterioration factors supplied by the manufacturer.

(ii) Separate exhaust emission deterioration factors, determined by the manufacturer, must be supplied for each engine family. The deterioration factors must be applied as follows:

(A) For marine spark-ignition engines not utilizing aftertreatment technology (for example, catalytic converters), the official exhaust emission results for each emission data engine at the selected test point are adjusted by adding the appropriate deterioration factor to the results. However, if the deterioration factor supplied by the manufacturer is less than zero, it is zero for the purposes of this paragraph.

(B) For marine spark-ignition engines utilizing aftertreatment technology (for example, catalytic converters), the official exhaust emission results for each emission data engine at the selected test point are adjusted by multiplying the results by the appropriate deterioration factor. However, if the deterioration factor supplied by the manufacturer is less than one, it is one for the purposes of this paragraph.

(iii) The emission values to compare with the Family Emission Limits (FELs) are the adjusted emission values of paragraph (c)(3)(ii) of this section, rounded to the same number of significant figures as contained in the applicable standard in accordance with ASTM E 29–93a, for each emission data engine. This procedure has been incorporated by reference. See § 91.6.

§ 91.121 Certification procedure—recordkeeping.

(a) The engine manufacturer must maintain the following adequately organized records:

(1) Copies of all applications and summary information, as applicable, filed with the Administrator;

(2) A copy of all data obtained through the production line and in-use testing programs; and

(3) A detailed history of each test engine used for certification including the following:

(i) A description of the test engine's construction, including a general description of the origin and buildup of the engine, steps taken to insure that it is representative of production engines, description of components specially built for the test engine, and the origin and description of all emission-related components;

(ii) A description of the method used for engine service accumulation, including date(s) and the number of hours accumulated;

(iii) A description of all maintenance, including modifications, parts changes, and other servicing performed, and the date(s), and reason(s) for such maintenance;

(iv) A description of all emission tests performed, including routine and standard test documentation, as specified in subpart E of this part, date(s), and the purpose of each test;

(v) A description of all tests performed to diagnose engine or emission control performance, giving the date and time of each and the reason(s) for the test; and

(vi) A description of any significant event(s) affecting the engine during the period covered by the history of the test engine but not described by an entry under one of the previous paragraphs of this section.

(b) Routine emission test data, such as test cell temperature and relative humidity at start and finish of test and raw emission results from each mode or test phase, must be retained for a period of one year after issuance of all certificates of conformity to which they relate. All other information specified in paragraph (a) of this section must be retained for a period of eight years after issuance of all certificates of conformity to which they relate.

(c) Records may be kept in any format and on any media, provided that, at the Administrator's request, organized, written records in English are promptly supplied by the manufacturer.

(d) The manufacturer must supply, at the Administrator's request, copies of any engine maintenance instructions or explanations issued by the manufacturer.

§ 91.122 Amending the application and certificate of conformity.

(a) The marine engine manufacturer must notify the Administrator

(1) When either an engine is to be added to a certificate of conformity or changes are to be made to a product line covered by a certificate of conformity which may potentially affect emissions, emissions durability, an emission related part, or the durability of an emission related part. Notification occurs when the manufacturer submits and EPA receives a request to amend the original application prior to either producing such engines or making such changes to a product line. For existing technology OB/PWC engines only, notification may occur periodically but must occur at least on a quarterly basis and may be submitted summarily as determined by the Administrator.

(2) When an FEL is changed for an engine family, as allowed under § 91.203. Notification occurs when the manufacturer submits and EPA receives a request to amend the original application. The manufacturer may not change an FEL unless compliance under § 91.207(b) is maintained through the use of the revised FEL.

(b) The request to amend the engine manufacturer's existing certificate of conformity must include the following information:

(1) A full description of the engine to be added or the change(s) to be made in production;

(2) The manufacturer's proposed test engine selection(s); and

(3) Engineering evaluations or reasons why the original test engine or FEL is or is not still appropriate.

(c) The Administrator may require the engine manufacturer to perform tests on an engine representing the engine to be added or changed.

(d) Decision by Administrator.

(1) Based on the submitted request and data derived from such testing as the Administrator may require or conduct, the Administrator must determine whether the proposed addition or change would still be covered by the certificate of conformity then in effect.

(2) If the Administrator determines that the new or changed engine(s) meets the requirements of this subpart and the Act, the appropriate certificate of conformity will be amended.

(3) If the Administrator determines that the new or changed engines would not be covered by the certificate of conformity, the Administrator must provide a written explanation to the engine manufacturer of his or her decision not to amend the certificate. The manufacturer may request a hearing on a denial. See § 91.125.

(4) If the Administrator determines that the revised FEL meets the requirements of this subpart and the Act, the appropriate certificate of conformity will be amended to reflect the revised FEL. The certificate of conformity is revised conditional upon compliance under § 91.207(b).

(e)(1) Alternatively, an engine manufacturer may make changes in or additions to production engines concurrently with requesting to amend the application or certification of conformity as set forth in paragraph (b) of this section, if the manufacturer determines that all affected engines will

still meet applicable Family Emission Limits (FELs). The engine manufacturer must supply supporting documentation, test data, and engineering evaluations as appropriate to support its determination.

(2) If, after a review, the Administrator determines additional testing is required, the engine manufacturer must provide required test data within 30 days or cease production of the affected engines.

(3) If the Administrator determines that the affected engines do not meet applicable requirements, the Administrator will notify the engine manufacturer to cease production of the affected engines.

§ 91.123 Denial, revocation of certificate of conformity.

(a) If, after review of the engine manufacturer's application, request for certification, information obtained from any inspection, and any other information the Administrator may require, the Administrator determines that the test engine or engine family does not meet applicable requirements or the Family Emission Limit (FEL), the Administrator will notify the manufacturer in writing, setting forth the basis for this determination.

(b) Notwithstanding the fact that engines described in the application may comply with all other requirements of this subpart, the Administrator may deny the issuance of or revoke a previously issued certificate of conformity if the Administrator finds any one of the following infractions to be substantial:

(1) The engine manufacturer submits false or incomplete information;

(2) The engine manufacturer denies an EPA enforcement officer or EPA authorized representative the opportunity to conduct authorized inspections;

(3) The engine manufacturer fails to supply requested information or amend its application to include all engines being produced;

(4) The engine manufacturer renders inaccurate any test data which it submits or otherwise circumvents the intent of the Act or this part;

(5) The engine manufacturer denies an EPA enforcement officer or EPA authorized representative reasonable assistance (as defined in § 91.505); or

(6) The engine manufacturer fails to initiate, perform or submit required data generated from the production line and in-use testing programs to EPA.

(c) If any manufacturer knowingly commits an infraction specified in paragraph (b)(1), (b)(4), or (b)(6) of this section or knowingly commits any other fraudulent act which results in the issuance of a certificate of conformity, or fails to comply with the conditions specified in §§ 91.203(f), 91.206(d), 91.208(c) or 91.209(g), the Administrator may void such certificate *ab initio.*

(d) When the Administrator denies, revokes, or voids *ab initio* a certificate of conformity, the engine manufacturer will be provided a written determination. The manufacturer may request a hearing on the Administrator's decision.

(e) Any revocation of a certificate of conformity extends no further than to forbid the introduction into commerce of those engines previously covered by the certificate which are still in the possession of the engine manufacturer, except in cases of such fraud or other misconduct that makes the certificate void *ab initio.*

§ 91.124 Request for hearing.

(a) An engine manufacturer may request a hearing on the Administrator's denial or revocation or voiding *ab initio* of a certificate of conformity.

(b) The engine manufacturer's request must be filed within 30 days of the Administrator's decision, be in writing, and set forth the manufacturer's objections to the Administrator's decision and data to support the objections.

(c) If, after review of the request and supporting data, the Administrator finds that the request raises a substantial and factual issue, the Administrator will grant the engine manufacturer's request for a hearing.

§ 91.125 Hearing procedures.

The hearing procedures set forth in §§ 91.513, 91.514, and 91.515 apply to this subpart.

§ 91.126 Right of entry and access.

Any engine manufacturer who has applied for certification of a new engine or engine family subject to certification testing under this subpart must admit or cause to be admitted to any applicable facilities during operating hours any EPA enforcement officer or EPA authorized representative as provided in § 91.505.

Subpart C—Averaging, Banking, and Trading Provisions

§ 91.201 Applicability.

The requirements of this subpart C are applicable to all marine spark-ignition engines subject to the provisions of subpart A of this part 91.

§ 91.202 Definitions.

The definitions in subpart A of this part apply to this subpart. The following definitions also apply to this subpart:

Averaging for marine SI engines means the exchange of emission credits among engine families within a given manufacturer's product line.

Banking means the retention of marine SI engine emission credits by the manufacturer generating the emission credits for use in future model year averaging or trading as permitted by these regulations.

Eligible sales means marine SI engines sold for purposes of being used in the United States and include any engine introduced into commerce in the U.S. to be sold for use in the U.S.

Emission credits represent the amount of emission reduction or exceedance, by a marine SI engine family, below or above the applicable emission standard, respectively. Emission reductions below the standard are considered as ''positive credits,'' while emission exceedances above the standard are considered as ''negative credits.'' In addition, ''projected credits'' refer to emission credits based on the projected applicable production/sales volume of the engine family. ''Reserved credits'' are emission credits generated within a model year waiting to be reported to EPA at the end of the model year. ''Actual credits'' refer to emission credits based on actual applicable production/sales volume as contained in the end-of-year reports submitted to EPA. Some or all of these credits may be revoked if EPA review of the end-of-year reports or any subsequent audit action(s) uncovers problems or errors.

Point of first retail sale means the point at which the engine is first sold directly to an end user. Generally, this point is the retail boat or engine dealer. If the engine is sold first to a boat or vessel manufacturer for installation in a boat or vessel, the boat or vessel manufacturer may be the point of first retail sale if the boat or vessel manufacturer can determine if the engine is or is not exported once they have sold the boat or vessel. If the boat or vessel manufacturer cannot determine if the engine is or is not exported once they have sold the boat or vessel, the engine is presumed to not be exported, unless the engine manufacturer can demonstrate otherwise. Engine manufacturers must include engines in their average if the engine is exported and subsequently imported into the United States installed in a boat or vessel and introduced into United States commerce.

Trading means the exchange of marine engine emission credits between manufacturers.

§ 91.203 General provisions.

(a) The certification averaging, banking, and trading provisions for hydrocarbon plus oxides of nitrogen emissions from eligible marine SI engines are described in this subpart.

(b) A marine SI engine family must use the averaging provisions and may use the banking and trading provisions for hydrocarbon plus oxides of nitrogen emissions if it is subject to regulation under subpart B of this part with certain exceptions specified in paragraph (c) of this section.

(c) Manufacturers of marine SI engines may not use the banking and trading provisions for new marine SI engines:

(1) which are exported, or

(2) which are subject to state engine emission standards unless the manufacturer demonstrates to the Administrator that inclusion of these engines in banking and trading is appropriate.

(d) A manufacturer may certify marine SI engine families at Family Emission Limits (FELs) above or below the applicable emission standard, provided the summation of the manufacturer's projected balance of all credit transactions in a given model year is greater than or equal to zero, as determined under § 91.207.

(1) A manufacturer of an engine family with an FEL exceeding the applicable emission standard must obtain positive emission credits sufficient to address the associated credit shortfall via averaging, banking, or trading.

(2) An engine family with an FEL below the applicable emission standard may generate positive emission credits for averaging, banking, or trading, or a combination thereof. Emission credits may not be used to offset an engine family's emissions that exceed its applicable FEL. Credits may not be used to remedy nonconformity determined by a production line testing, a Selective Enforcement Audit (SEA) or by recall (in-use) testing. However, in the case of a manufacturer production line testing or SEA failure, credits may be used to allow subsequent production of engines for the family in question if the manufacturer elects to recertify to a higher FEL. In the case of production line testing a manufacturer may revise the FEL based upon production line testing results obtained under subpart F and upon Administrator approval pursuant to § 91.122(d).

(e) Credits generated in a given model year may be used in the following three model years. Credits not used by the end of the third model year after being generated are forfeited. Credits generated in one model year may not be used for prior model years, unless allowed under § 91.207.

(f) Manufacturers must demonstrate compliance under the averaging, banking, and trading provisions for a particular model year by 270 days after the model year. An engine family generating negative credits for which the manufacturer does not obtain or generate an adequate number of positive credits from the same or previous model years will violate the conditions of the certificate of conformity. The certificate of conformity may be voided *ab initio* pursuant to § 91.123 for this engine family.

§ 91.204 Averaging.

(a) Negative credits from engine families with FELs above the applicable emission standard must be offset by positive credits from engine families below the applicable emission standard, as allowed under the provisions of this subpart. Averaging of credits in this manner is used to determine compliance under § 91.207(b).

(b) For model years through 2000, outboard credits may not be summed with personal watercraft credits, or vice versa, for purposes of compliance under § 91.207, except manufacturers may, at their discretion, include personal watercraft credits with outboard credits upon demonstration to the satisfaction of the Administrator that the personal watercraft engine is installed in a hybrid vessel that is smaller than a typical sterndrive or inboard vessel and larger than a typical personal watercraft. For model year 2001 and later, manufacturers must sum credits generated from outboard and personal watercraft to determine compliance under § 91.207.

(c) Credits used in averaging may be obtained from credits generated by another engine family as allowed under § 91.204(b), in the same model year, credits banked in the three previous model years, or credits obtained through trading.

§ 91.205 Banking.

(a) A manufacturer of a marine SI engine family with an FEL below the applicable emission standard for a given model year may bank credits in that model year for use in averaging and trading in the following three model years. Negative credits must be banked according to the requirements under § 91.207(c). Positive credits not used within the three model years after they are banked are forfeited.

(1) early banking

(i) For outboard engines in model year (MY) 1997, a manufacturer may bank positive emission credits if the following conditions are met: the manufacturer certifies their entire marine outboard engine product line for MY 1997 under the emission standards applicable to MY 1998, the manufacturer demonstrates compliance with the corporate average standard under § 91.207(b), and the sum of positive and negative credits under § 91.207 generates positive emission credits, when the following formula is used for purposes of the applicable standard in § 91.207(a). The number of credits that may be banked under this paragraph is the number of positive emission credits generated under the provisions of the preceding sentence. Marine engines certified under the provisions of this paragraph are subject to all of the requirements of this part.

HYDROCARBON PLUS OXIDES OF NITROGEN EXHAUST EMISSION STANDARDS

[Grams per kilowatt-hour]

Model year	P<4.3 kW $HC+NO_X$ Emission standard by model year	P>4.3 kW $HC+NO_X$ emission standard by model year
1997	276	$(0.959 \times (151 + 557/P^{0.9})+1.22)$

(ii) For personal watercraft engines in model year 1998, a manufacturer may bank positive emission credits if the following conditions are met: The manufacturer certifies their entire marine personal watercraft engine product line for MY 1998 under the emission standards applicable to 1998 model year outboard engine emission standards, the manufacturer demonstrates compliance with the corporate average standard under § 91.207(b), and the sum of positive and negative credits under § 91.207 generates positive emission credits, when the following formula is used for purposes of the applicable standard § 91.207(a). The number of credits that may be banked under this paragraph is the number of positive emission credits generated under the provisions of the preceding sentence. Marine engines certified under the provisions of this paragraph are subject to all of the requirements of this part.

HYDROCARBON PLUS OXIDES OF NITROGEN EXHAUST EMISSION STANDARDS

[Grams per kilowatt-hour]

Model year	P<4.3 kW $HC+NO_X$ emission standard by model year	P> 4.3 kW $HC+NO_X$ emission standard by model year
1998	276	$(0.959 \times (151 + 557/P^{0.9})) + 1.22)$

(ii) For personal watercraft in model year 1997, a manufacturer may bank positive emission credits if the following conditions are met: the manufacturer certifies their entire marine personal watercraft engine product line for MY 1997 under the emission standards specified in the formula below for PWC, the manufacturer demonstrates compliance with the corporate average standard under § 91.207(b), and the sum of positive and negative credits under § 91.207 generates positive emission credits, when the following formula is used for purposes of the applicable standard in § 91.207(a). The number of credits that may be banked under this paragraph is the number of positive emission credits generated under the provisions of the preceding sentence. Marine engines certified under the provisions of this paragraph are subject to all of the requirements of this part.

HYDROCARBON PLUS OXIDES OF NITROGEN EXHAUST EMISSION STANDARDS

[Grams per kilowatt-hour]

Model year	P<4.3 kW $HC+NO_X$ emission standard by model year	P> 4.3 kW $HC+NO_X$ emission standard by model year
1997	276	$(0.959 \times (151 + 557/P^{0.9})) + 1.22)$

(b) A manufacturer may bank actual credits only after the end of the model year and after EPA has reviewed the manufacturer's end-of-year reports. During the model year and before submittal of the end-of-year report, credits originally designated in the certification process for banking will be considered reserved and may be redesignated for trading or averaging in the end-of-year report and final report.

(c) Credits declared for banking from the previous model year that have not been reviewed by EPA may be used in averaging or trading transactions. However, such credits may be revoked at a later time following EPA review of the end-of-year report or any subsequent audit actions.

§ 91.206 Trading.

(a) A marine SI engine manufacturer may exchange emission credits with other marine SI engine manufacturers in trading. These credits must be used in the same averaging set as generated.

(b) Credits for trading can be obtained from credits banked in the three previous model years or credits generated during the model year of the trading transaction. Traded credits expire if they are not used in averaging within three model years following the model year in which they were generated.

(c) Traded credits can be used for averaging, banking, or further trading transactions.

(d) In the event of a negative credit balance resulting from a transaction, both the buyer and the seller are liable, except in cases involving fraud. Certificates of all engine families participating in a negative trade may be voided *ab initio* pursuant to § 91.123.

§ 91.207 Credit calculation and manufacturer compliance with emission standards.

(a) For each engine family, certification emission credits (positive or negative) are to be calculated according to the following equation and rounded, in accordance with ASTM E29–93a, to the nearest gram. ASTM E29–93a has been incorporated by reference. See § 91.6. Consistent units are to be used throughout the equation. The following equation is used to determine hydrocarbon plus oxides of nitrogen credit status for an engine family, whether generating positive credits or negative credits:

$$\sum_{t=1}^{\text{max actual life}} \frac{S(t) \times \text{sales} \times (\text{std} - \text{fel}) \times \text{Power} \times 0.207 \times \mu_{use}}{1.03^{t}}$$

Where:

sales = the number of eligible sales tracked to the point of first retail sale for the given engine family during the model year. Annual production projections are used to project credit availability for initial certification. Actual sales volume is used in determining actual credits for end of-year compliance determination.

t = time in model years

Power = the average power of an engine family in kW (sales weighted). The power of each configuration is the rated output in kilowatts as determined by SAE J1228. This procedure has been incorporated by reference. See § 91.6.

max actual life = maximum actual life specific to the power rating and the application; max actual life = $2\mu_{life}$

μ_{life} = average actual life in years, specific to the power rating and the application as given below.

Engine type	(μ_{life})
Outboard	$41.27 \times \left(\frac{\text{Power}}{0.746}\right)^{-0.204}$
Personal Watercraft	10

Power = as defined above.

μ_{use} = mean use in hours per year. For outboard engines, μ_{use} = 34.8 hrs /yr. For personal watercraft, μ_{use} = 77.3 hrs/yr;

S(t)=cumulative fraction survived at time t;

$S(t)=e^{-(t\times 0.906/\mu life)4.0}$

STD=the current and applicable marine SI engine emission standard in grams per kilowatt hour as determined in § 91.104.

FEL=the family emission limit for the engine family in grams per kilowatt hour.

(b) Manufacturer compliance with the corporate average emission standard is determined on a corporate average basis at the end of each model year. A manufacturer is in compliance when the sum of positive and negative emission credits it holds is greater than or equal to zero, except as allowed under paragraph (c) of this section.

(c)(1) Outboard Engines

(i) For model year 1998, a manufacturer is in compliance when the sum of positive credits and negative emission credits it holds is greater than or equal to zero, including

(A) Credits generated in MY 1998 exceed 70% of the negative credits generated in MY 1998. The remaining negative credits (up to 30% of the total negative credits) must be banked.

(ii) For model year 1999, a manufacturer is in compliance when the positive credits generated in MY 1999 exceed the sum of 80% of the negative credits generated in MY 1999 and the negative credits banked in 1998. The remaining negative credits (up to 20% of the total negative credits) must be banked.

(iii) For model year 2000, a manufacturer is in compliance when the sum of positive and negative emission credits it holds is greater than or equal to zero, including

(A) The negative credits banked in MY 1998 and MY 1999 and

(B) Any adjustments to credits based on adjustments to FELs resulting from requirements in § 91.118(h)(1)(i). Manufacturers do not have to recalculate compliance for model years 1998 and 1999.

(2) Personal Watercraft Engines

(i) For model year 1999, a manufacturer is in compliance when the positive credits generated in MY 1999 exceed 50% of the negative credits generated in MY 1999. The remaining negative credits (up to 50% of the total negative credits) must be banked.

(ii) For model year 2000, a manufacturer is in compliance when the sum of positive and negative emission credits it holds is greater than or equal to zero, including

(A) The negative credits banked in 1999 and

(B) Any adjustments to credits based on adjustments to FELs resulting from requirements in § 91.118(h)(1)(i). Manufacturers do not have to recalculate compliance for model year 1999.

(d) When a manufacturer is not in compliance, the manufacturer will be in violation of these regulations and EPA may void *ab initio* the certificates of engine families for which the manufacturer has not obtained sufficient positive emission credits pursuant to § 91.123.

§ 91.208 Certification.

(a) In the application for certification a manufacturer must:

(1) Submit a statement that the engines for which certification is requested will not, to the best of the manufacturer's belief, cause the manufacturer to be in noncompliance under § 91.207(b) when all credits are calculated for all the manufacturer's engine families.

(2) Declare an FEL for each engine family for HC plus NO_X. The FEL must have the same number of significant digits as the emission standard.

(3) Indicate the projected number of credits generated/needed for this family; the projected applicable production/sales volume, by quarter; and the values required to calculate credits as given in § 91.207.

(4) Submit calculations in accordance with § 91.207 of projected emission credits (positive or negative) based on quarterly production projections for each family.

(5) (i) If the engine family is projected to have negative emission credits, state specifically the source (manufacturer/engine family or reserved) of the credits necessary to offset the credit deficit according to quarterly projected production.

(ii) If the engine family is projected to generate credits, state specifically (manufacturer/engine family or reserved) where the quarterly projected credits will be applied.

(b) All certificates issued are conditional upon manufacturer compliance with the provisions of this subpart both during and after the model year of production.

(c) Failure to comply with all provisions of this subpart will be considered to be a failure to satisfy the conditions upon which the certificate was issued, and the certificate may be deemed void *ab initio* pursuant to § 91.123.

(d) The manufacturer bears the burden of establishing to the satisfaction of the Administrator that the conditions upon which the certificate was issued were satisfied or waived.

(e) Projected credits based on information supplied in the certification application may be used to obtain a certificate of conformity. However, any such credits may be revoked based on review of end-of-year reports, follow-up audits, and any other verification steps deemed appropriate by the Administrator.

§ 91.209 Maintenance of records.

(a) The manufacturer must establish, maintain, and retain the following adequately organized and indexed records for each engine produced:

(1) EPA engine family,

(2) Engine identification number,

(3) Engine model year and build date,

(4) Power rating,

(5) Purchaser and destination, and

(6) Assembly plant.

(b) The manufacturer must establish, maintain, and retain the following adequately organized and indexed records for each engine family:

(1) EPA engine family identification code,

(2) Family Emission Limit (FEL) or FELs where FEL changes have been implemented during the model year,

(3) Power rating for each configuration tested,

(4) Projected sales volume for the model year, and

(5) Actual sales volume for the model year for each FEL where FEL changes have been implemented during the model year.

(c) Any manufacturer producing an engine family participating in trading reserved credits must maintain the following records on a quarterly basis for each such engine family:

(1) The engine family,

(2) The actual quarterly and cumulative applicable production/sales volume,

(3) The values required to calculate credits as given in § 91.207,

(4) The resulting type and number of credits generated/required,

(5) How and where credit surpluses are dispersed, and

(6) How and through what means credit deficits are met.

(d) The manufacturer must retain all records required to be maintained under this section for a period of eight years from the due date for the end-of-model year report. Records may be retained as hard copy or reduced to microfilm, ADP diskettes, and so forth, depending on the manufacturer's record retention procedure; provided, that in every case all information contained in the hard copy is retained.

(e) Nothing in this section limits the Administrator's discretion in requiring the manufacturer to retain additional

records or submit information not specifically required by this section.

(f) Pursuant to a request made by the Administrator, the manufacturer must submit to the Administrator the information that the manufacturer is required to retain.

(g) EPA may void *ab initio* a certificate of conformity for an engine family for which the manufacturer fails to retain the records required in this section or to provide such information to the Administrator upon request pursuant to § 91.123.

§ 91.210 End-of-year and final reports.

(a) End-of-year and final reports must indicate the engine family, the actual sales volume, the values required to calculate credits as given in § 91.207, and the number of credits generated/required. Manufacturers must also submit how and where credit surpluses were dispersed (or are to be banked) and/or how and through what means credit deficits were met. Copies of contracts related to credit trading must be included or supplied by the broker, if applicable. The report must include a calculation of credit balances to show that the credit summation is equal to or greater than zero.

(b) The sales volume for end-of-year and final reports must be based on the location of the point of first retail sale (for example, retail customer or dealer) also called the final product purchase location.

(c)(1) End-of-year reports must be submitted within 90 days of the end of the model year to: Manager, Engine Compliance Programs Group (6403–J), US Environmental Protection Agency, 401 M Street SW, Washington, DC 20460.

(2) Final reports must be submitted within 270 days of the end of the model year to: Manager, Engine Compliance Programs Group (6403–J), U.S. Environmental Protection Agency, 401 M Street SW, Washington, DC 20460.

(d) Failure by a manufacturer to submit any end-of-year or final reports in the specified time for all engines is a violation of § 91.1103(a)(2) and section 213(d) of the Clean Air Act for each engine.

(e) A manufacturer generating credits for banking only who fails to submit end-of-year reports in the applicable specified time period (90 days after the end of the model year) may not use the credits until such reports are received and reviewed by EPA. Use of projected credits pending EPA review is not permitted in these circumstances.

(f) Errors discovered by EPA or the manufacturer in the end-of-year report, including errors in credit calculation, may be corrected in the final report up to 270 days from the end of the model year.

(g) If EPA or the manufacturer determines that a reporting error occurred on an end-of-year or final report previously submitted to EPA under this section, the manufacturer's credits and credit calculations must be recalculated. Erroneous positive credits will be void except as provided in paragraph (h) of this section. Erroneous negative credit balances may be adjusted by EPA.

(h) If within 270 days of the end of the model year, EPA review determines a reporting error in the manufacturer's favor (that is, resulting in an increased credit balance) or if the manufacturer discovers such an error within 270 days of the end of the model year, EPA shall restore the credits for use by the manufacturer.

§ 91.211 Notice of opportunity for hearing.

Any voiding of the certificate under §§ 91.203(f), 91.206(d), 91.207(d), 91.208(c), or § 91.209(g) shall be made only after the manufacturer concerned is offered an opportunity for a hearing conducted in accordance with §§ 91.512, 91.513 and 91.514 and, if a manufacturer requests such a hearing, will be made only after an initial decision by the Presiding Officer.

Subpart D—Emission Test Equipment Provisions

§ 91.301 Scope; applicability.

(a) This subpart describes the equipment required in order to perform exhaust emission tests on new marine gasoline-fueled spark-ignition propulsion engines subject to the provisions of subpart A of this part 91.

(b) Exhaust gases are sampled while the test engine is operated using a steady state test cycle on an engine dynamometer. Exhaust gas sampling may be performed using either the raw gas sampling method or the constant volume sampling (CVS) method. The exhaust gases receive specific component analysis determining concentration of pollutant, exhaust volume, the fuel flow, and the power output during each mode. Emissions are reported on a gram per brake-kilowatt hour (g/kW-hr). See subpart E of this part for a complete description of the test procedure.

(c) Additional information about system design, calibration methodologies, and so forth, for raw gas sampling can be found in part 86, subpart D of this chapter. Examples for system design, calibration methodologies, and so forth, for dilute sampling can be found in part 86, subpart N of this chapter.

§ 91.302 Definitions.

The definitions in § 91.3 apply to this subpart.

§ 91.303 Acronyms and abbreviations.

(a) The acronyms and abbreviations in § 91.5 apply to this subpart.

(b) The symbols in Table 1 in appendix A of this subpart apply to this subpart.

§ 91.304 Test equipment overview.

(a) All engines subject to this subpart are tested for exhaust emissions. Engines are operated on dynamometers meeting the specification given in § 91.305.

(b) The exhaust is tested for gaseous emissions using either a constant volume sampling (CVS) system as described in § 91.414, or using the raw gas sampling system as described in § 91.421. Both systems require analyzers (see paragraph (c) of this section) specific to the pollutant being measured.

(c) Analyzers used are a non-dispersive infrared detector (NDIR) absorption type for carbon monoxide and carbon dioxide analysis; paramagnetic detector (PMD), zirconia (ZRDO), or electrochemical type (ECS) for oxygen analysis; a flame ionization detector (FID) or heated flame ionization detector (HFID) type for hydrocarbon analysis; and a chemiluminescent detector (CLD) or heated chemiluminescent detector (HCLD) for oxides of nitrogen analysis.

§ 91.305 Dynamometer specifications and calibration accuracy.

(a) *Dynamometer specifications.* (1) The dynamometer test stand and other instruments for measurement of engine speed and torque must meet the accuracy requirements shown in Table 2 in appendix A to this subpart. The dynamometer must be capable of performing the test cycle described in § 91.410.

(b) *Dynamometer calibration accuracy.* (1) The dynamometer test stand and other instruments for measurement of engine torque and speed must meet the calibration frequency shown in Table 2 in appendix to this subpart.

(2) A minimum of three calibration weights for each range used is required. The weights must be equally spaced and traceable to within 0.5 percent of National Institute of Standards and Testing (NIST) weights. Laboratories located in foreign countries may certify calibration weights to local government bureau standards.

§ 91.306 Dynamometer torque cell calibration.

(a)(1) Any lever arm used to convert a weight or a force through a distance into a torque must be used in a horizontal position for horizontal shaft dynamometers (± five degrees). For vertical shaft dynamometers, a pulley system may be used to convert the dynamometer's horizontal loading into the vertical plane.

(2) Calculate the indicated torque (IT) for each calibration weight to be used by:

IT=Moment Arm (meters) X Calibration Weight (Newtons)

(3) Attach each calibration weight specified in § 91.305(b)(2) to the moment arm at the calibration distance determined in paragraph (a)(2) of this section. Record the power measurement equipment response (N-m) to each weight.

(4) Compare the torque value measured to the calculated torque.

(5) The measured torque must be within two percent of the calculated torque.

(6) If the measured torque is not within two percent of the calculated torque, adjust or repair the system. Repeat steps in paragraphs (a)(1) through (a)(6) of this section with the adjusted or repaired system.

(b) Option. A master load-cell or transfer standard may be used to verify the torque measurement system.

(1) The master load-cell and read out system must be calibrated with weights specified in § 91.305(b)(2).

(2) Attach the master load-cell and loading system.

(3) Load the dynamometer to a minimum of three equally spaced torque values as indicated by the master load-cell for each in-use range used.

(4) The in-use torque measurement must be within two percent of the torque measured by the master system for each load used.

(5) If the in-use torque is not within two percent of the master torque, adjust or repair the system. Repeat steps in paragraphs (b)(2) through (b)(4) of this section with the adjusted or repaired system.

(c) Calibrated resistors may not be used for dynamometer torque transducer calibration, but may be used to span the transducer prior to engine testing.

(d) Other engine dynamometer system calibrations such as speed are performed as specified by the dynamometer manufacturer or as dictated by good engineering practice.

§ 91.307 Engine cooling system.

An engine cooling system is required with sufficient capacity to maintain the engine at normal operating temperatures as prescribed by the engine manufacturer. Auxiliary fan(s) may be used to maintain sufficient engine cooling during dynamometer operation.

§ 91.308 Lubricating oil and test fuel.

(a) *Lubricating oil.* (1) Use the engine lubricating oil which meets the marine engine manufacturer's requirements for a particular engine and intended usage. Record the specifications of the lubricating oil used for the test.

(2) For two-stroke engines, the fuel/oil mixture ratio must be that which is recommended by the manufacturer. If the flow rate of the oil in the engine is greater than two percent of the fuel flow rate, then the oil supplied to the engine must be added to the fuel flow in the emission calculations described in § 91.419 and § 91.426. Good engineering judgment may be used to estimate oil flow when oil injection is used.

(b) *Test fuels—certification.* The manufacturer must use gasoline having the specifications or substantially equivalent specifications approved by the Administrator, as specified in Table 3 in appendix A of this subpart for exhaust emission testing of gasoline fueled engines. The specification range of the fuel to be used under this paragraph must be reported in accordance with § 91.109(d).

(c) *Test fuels—service accumulation.* (1) Unleaded gasoline representative of commercial gasoline which will be generally available through retail outlets must be used in service accumulation for gasoline-fueled marine engines. As an alternative, the certification test fuels specified under paragraph (b) of this section for engine service accumulation. Leaded fuel may not be used during service accumulation.

(2) The octane rating of the gasoline used may not be higher than 4.0 research octane numbers above the minimum recommended by the manufacturer and have a minimum sensitivity of 7.5 octane numbers, where sensitivity is defined as research octane number minus motor octane number.

(d) Other fuels may be used for testing provided:

(1) They are commercially viable,

(2) Information, acceptable to the Administrator, is provided to show that only the designated fuel would be used in customer service,

(3) Use of a fuel listed under paragraph (b) of this section would have a detrimental effect on emissions or durability; and

(4) The Administrator provides written approval of the fuel specifications prior to the start of testing.

§ 91.309 Engine intake air temperature measurement.

(a) Engine intake air temperature measurement must be made within 100 cm of the air-intake of the engine. The measurement location must be either in the supply system or in the air stream entering the engine.

(b) The temperature measurements must be accurate to within ±2 °C.

§ 91.310 Engine intake air humidity measurement.

This section refers to engines which are supplied with intake air other than the ambient air in the test cell (i.e., air which has been pumbed directly to the engine air intake system). For engines which use ambient test cell air for the engine intake air, the ambient testcell humidity measurement may be used.

(a) *Humidity conditioned air supply.* Air that has had its absolute humidity altered is considered humidity-conditioned air. For this type of intake air supply, the humidity measurements must be made within the intake air supply system, and after the humidity conditioning has taken place.

(b) *Unconditioned air supply.* Humidity measurements in unconditioned intake air supply must be made in the intake air stream entering the engine. Alternatively, the humidity measurements can be measured within the intake air stream entering the supply system.

§ 91.311 Test conditions.

(a) *General requirements.* (1) Ambient temperature levels encountered by the test engine throughout the test sequence may not be less than 20 °C nor more than 30 °C.

(2) Calculate all volumes and volumetric flow rates at standard conditions for temperature and pressure. Use these conditions consistently throughout all calculations. Standard conditions for temperature and pressure are 25 °C and 101.3 kPa.

(b) *Engine test conditions.* Measure the absolute temperature (designated as T and expressed in Kelvin) of the engine air at the inlet to the engine and the dry atmospheric pressure (designated as p_s and expressed in kPa. Determine the parameter *f* according to the following provisions:

(1) Naturally aspirated and mechanically supercharged engines:

$$f = \frac{99}{p_s} \times \left(\frac{T}{298}\right)^{0.7}$$

(2) Turbocharged engine with or without cooling of inlet air:

$$f = \left(\frac{99}{p_s}\right)^{0.7} \times \left(\frac{T}{298}\right)^{1.5}$$

(3) For a test to be recognized as valid, the parameter *f* must be between the limits as shown below:

$$0.96 < f < 1.04$$

§ 91.312 Analytical gases.

(a) The shelf life of a calibration gas may not be exceeded. Record the expiration date stated by the gas supplier for each calibration gas.

(b) *Pure gases.* The required purity of the gases is defined by the contamination limits given in parenthesis. The following gases must be available for operation.

(1) Purified nitrogen, also referred to as ''zero-grade nitrogen'' (Contamination≤1 ppm C, ≤1 ppm CO, ≤400 ppm CO_2, ≤0.1 ppm NO)

(2) Purified oxygen (Purity 99.5 percent vol O_2)

(3) Hydrogen-helium mixture (40±2 percent hydrogen, balance helium) (Contamination≤1 ppm C, ≤400 ppm CO)

(4) Purified synthetic air, also referred to as ''zero gas'' (Contamination≤1 ppm C, ≤1 ppm CO, ≤400 ppm CO_2, ≤0.1 ppm NO) (Oxygen content between 18–21 percent vol.)

(c) *Calibration and span gases.* (1) Calibration gas values are to be derived from NIST ''Standard Reference Materials'' (SRM's) or other local gas standards and are to be single blends as specified in this subsection.

(2) Mixtures of gases having the following chemical compositions must be available:

C_3H_8 and purified synthetic air (dilute measurements); C_3H_8 and purified nitrogen (raw measurements);

CO and purified nitrogen;

NO_X and purified nitrogen (the amount of NO_2 contained in this calibration gas must not exceed five percent of the NO content);

CO_2 and purified nitrogen.

Note: For the HFID or FID, the manufacturer may choose to use as a diluent span gas and the calibration gas either purified synthetic air or purified nitrogen. Any mixture of C_3H_8 and purified synthetic air which contains a concentration of propane higher than what a gas supplier considers to be safe may be substituted with a mixture of C_3H_8 and purified nitrogen. However, the manufacturer must be consistent in the choice of diluent (zero air or purified nitrogen) between the calibration and span gases. If a manufacturer chooses to use C_3H_8 and purified nitrogen for the calibration gases, then purified nitrogen must be the diluent for the span gases.

(3) The true concentration of a span gas must be within ± two percent of the NIST gas standard. The true concentration of a calibration gas must be within ± one percent of the NIST gas standard. The use of precision blending devices (gas dividers) to obtain the required calibration gas concentrations is acceptable. Give all concentrations of calibration gas on a volume basis (volume percent or volume ppm).

(4) The gas concentrations used for calibration and span may also be obtained by means of a gas divider, diluting with purified N_2 or with purified synthetic air. The accuracy of the mixing device must be such that the concentration of the diluted gases may be determined to within ± two percent.

(d) Oxygen interference check gases must contain propane with 350 ppmC ± 75 ppmC hydrocarbon. Determine the concentration value to calibration gas tolerances by chromatographic analysis of total hydrocarbons plus impurities or by dynamic blending. Use nitrogen as the predominant diluent with the balance oxygen.

(e) Fuel for the hydrocarbon flame ionization detector (HC–FID) must be a blend of 40±2 percent hydrogen with the balance being helium. The mixture shall contain less than one ppm equivalent carbon response; 98 to 100 percent hydrogen fuel may be used with advance approval of the Administrator.

(f) *Hydrocarbon analyzer burner air.* The concentration of oxygen must be within one mole percent of the oxygen concentration of the burner air used in the latest oxygen interference check (percent O_2I), see § 91.316(d). If the difference in oxygen concentration is greater than one mole percent, then the oxygen interference must be checked and the analyzer adjusted if necessary, to meet the percent O_2I requirements. The burner air must contain less than two ppmC hydrocarbon.

§ 91.313 Analyzers required.

(a) *Analyzers.* Analyze measured gases with the following instruments:

(1) *Carbon monoxide (CO) analysis.* (i) The carbon monoxide analyzer must be of the non-dispersive infrared (NDIR) absorption type.

(ii) The use of linearizing circuits is permitted.

(2) *Carbon dioxide (CO_2)* analysis. (i) The carbon dioxide analyzer must be of the non-dispersive infrared (NDIR) absorption type.

(ii) The use of linearizing circuits is permitted.

(3) *Oxygen (O_2)* analysis. Oxygen (O_2) analyzers may be of the paramagnetic (PMD), zirconia (ZRDO) or electrochemical type (ECS).

(4) *Hydrocarbon (HC) analysis.* (i) For Raw Gas Sampling, the hydrocarbon analyzer must be of the heated flame ionization (HFID) type. For constant volume sampling, the hydrocarbon analyzer may be of the flame ionization (FID) type or of the heated flame ionization (HFID) type.

(ii) For the HFID system, if the temperature of the exhaust gas at the sample probe is below 190° C, the temperature of the valves, pipe work, and so forth, must be controlled so as to maintain a wall temperature of 190° C ± 11° C. If the temperature of the exhaust gas at the sample probe is above 190° C, the temperature of the valves, pipe work, and so forth, must be controlled so as to maintain a wall temperature greater than 180° C.

(iii) For the HFID analyzer, the detector, oven, and sample-handling components within the oven must be suitable for continuous operation at temperatures to 200° C. It must by capable of maintaining temperature within ± 5.5° C of the set point.

(iv) Fuel and burner air must conform to the specifications in § 91.312.

(v) The percent of oxygen interference must be less than three percent, as specified in § 91.316(d).

(5) *Oxides of nitrogen (NO_X)* analysis. (i) This analysis device consists of the following items:

(A) A NO_2 to NO converter. The NO_2 to NO converter efficiency must be at least 90 percent.

(B) An ice bath located after the NO_X converter (optional).

(C) A chemiluminescent detector (CLD) or heated chemiluminescent detector (HCLD).

(ii) The quench interference must be less than three percent as measured in § 91.325.

(b) Other gas analyzers yielding equivalent results may be used with advance approval of the Administrator.

(c) The following requirements must be incorporated as indicated in systems used for testing under this subpart.

(1) Carbon monoxide and carbon dioxide measurements must be made on a dry basis (for raw exhaust measurement only). Specific requirements for the means of drying the sample can be found in § 91.313(e).

(2) Calibration or span gases for the NO_X measurement system must pass through the NO_2 to NO converter.

(d) The electromagnetic compatibility (EMC) of the equipment must be on a level as to minimize additional errors.

(e) Gas drying. Chemical dryers are not an acceptable method of removing water from the sample. Water removal

by condensation is acceptable. If water is removed by condensation, the sample gas temperature or sample dew point must be monitored either within the water trap or downstream and its temperature must not exceed 7° C. A water trap performing this function is an acceptable method. Means other than condensation may be used only with prior approval from the Administrator.

§ 91.314 Analyzer accuracy and specifications.

(a) *Measurement accuracy—general.* The analyzers must have a measuring range which allows them to measure the concentrations of the exhaust gas sample pollutants with the accuracies shown in Table 2 in appendix A to this subpart.

(1) *Precision.* The precision of the analyzer must be, at worst, ± one percent of full-scale concentration for each range used. The precision is defined as 2.5 times the standard deviation(s) of 10 repetitive responses to a given calibration or span gas.

(2) *Noise.* The analyzer peak-to-peak response to zero and calibration or span gases over any 10-second period may not exceed two percent of full-scale chart deflection on all ranges used.

(3) *Zero drift.* The analyzer zero-response drift during a one-hour period must be less than two percent of full-scale chart deflection on the lowest range used. The zero-response is defined as the mean response including noise to a zero-gas during a 30-second time interval.

(4) *Span drift.* The analyzer span drift during a one-hour period must be less than two percent of full-scale chart deflection on the lowest range used. The analyzer span is defined as the difference between the span-response and the zero-response. The span-response is defined as the mean response including noise to a span gas during a 30-second time interval.

(b) *Operating procedure for analyzers and sampling system.* Follow the start-up and operating instructions of the instrument manufacturer. Adhere to the minimum requirements given in § 91.316 to § 91.325 and § 91.409.

(c) *Emission measurement accuracy—Bag sampling.* (1) Good engineering practice dictates that exhaust emission sample analyzer readings below 15 percent of full scale chart deflection should generally not be used.

(2) Some high resolution read-out systems, such as computers, data loggers, and so forth, can provide sufficient accuracy and resolution below 15 percent of full scale. Such systems may be used provided that additional calibrations are made to ensure the accuracy of the calibration curves. The following procedure for calibration below 15 percent of full scale may be used:

Note: If a gas divider is used, the gas divider must conform to the accuracy requirements as follows: The use of precision blending devices (gas dividers) to obtain the required calibration gas concentrations is acceptable, provided that the blended gases are accurate to within ± 1.5 percent of NIST gas standards or other gas standards which have been approved by the Administrator. This accuracy implies that primary gases used for blending must be ''named'' to an accuracy of at least ± 1 percent, traceable to NIST or other approved gas standards.

(i) Span the full analyzer range using a top range calibration gas. The span gases must be accurate to within ± 2 percent of NIST gas standards or other gas standards which have been approved by the Administrator.

(ii) Generate a calibration curve according to, and meeting the requirements of the sections describing analyzer calibrations which are found in §§ 91.316, 91.317, 91.318, and 91.320 of this chapter.

(iii) Select a calibration gas (a span gas may be used for calibrating the CO_2 analyzer) with a concentration between the two lowest non-zero gas divider increments. This gas must be ''named'' to an accuracy of ± 2 percent of NIST gas standards, or other standards approved by the Administrator.

(iv) Using the calibration curve fitted to the points generated in paragraphs (c)(2) (i) and (ii) of this section, check the concentration of the gas selected in paragraph (c)(2)(iii) of this section. The concentration derived from the curve must be within ± 2.3 percent (± 2.8 percent for CO_2 span gas) of the gas' original named concentration.

(v) Provided the requirements of paragraph (c)(2)(iv) of this section are met, use the gas divider with the gas selected in paragraph (c)(2)(iii) of this section and determine the remainder of the calibration points. Fit a calibration curve per §§ 91.316, 91.317, 91.318, and 91.320 of this chapter for the entire analyzer range.

(d) *Emission measurement accuracy—continuous sampling.* Analyzers used for continuous analysis must be operated such that the measured concentration falls between 15 and 100 percent of full scale chart deflection. Exceptions to these limits are:

(1) The analyzer's response may be less than 15 percent or more than 100 percent of full scale if automatic range change circuitry is used and the limits for range changes are between 15 and 100 percent of full scale chart deflection;

(2) The analyzer's response may be less than 15 percent of full scale if:

(i) Alternative in paragraph (c)(2) of this section is used to ensure that the accuracy of the calibration curve is maintained below 15 percent; or

(ii) The full scale value of the range is 155 ppmC or less; or

(iii) The emissions from the engine are erratic and the integrated chart deflection value for the cycle is greater than 15 percent of full scale; or

(iv) The contribution of all data read below the 15 percent level is less than 10 percent by mass of the final test results.

§ 91.315 Analyzer initial calibration.

(a) *Warming-up time.* Follow the warm-up time according to the recommendations of the manufacturer. If not specified, a minimum of two hours should be allowed for warming up the analyzers.

(b) *NDIR and HFID analyzer.* Tune and maintain the NDIR analyzer per the instrument manufacturer recommendations. The combustion flame of the HFID analyzer must be optimized in order to meet the specifications in § 91.316(b).

(c) *Zero setting and calibration.* Using purified synthetic air (or nitrogen), set the CO, CO_2, NO_X and HC analyzers at zero. Connect the appropriate calibrating gases to the analyzers and record the values. The same gas flow rates shall be used as when sampling exhaust.

(d) *Rechecking of zero setting.* Recheck the zero setting and, if necessary, repeat the procedure described in paragraph (c) of this section.

§ 91.316 Hydrocarbon analyzer calibration.

(a) Calibrate the FID and HFID hydrocarbon analyzer as described in this section. Operate the HFID to a set point ± 5.5 °C between 185 and 197 °C.

(b) Initial and periodic optimization of detector response. Prior to introduction into service and at least annually thereafter, adjust the FID and HFID hydrocarbon analyzer for optimum hydrocarbon response as specified by this paragraph. Alternative methods yielding equivalent results may be used, if approved in advance by the Administrator.

(1) Follow good engineering practices for initial instrument start-up and basic operating adjustment using the appropriate fuel (see § 91.312) and purified synthetic air or zero-grade nitrogen.

(2) One of the following procedures is required for FID or HFID optimization:

(i) The procedure outlined in Society of Automotive Engineers (SAE) paper

No. 770141, ''Optimization of Flame Ionization Detector for Determination of Hydrocarbons in Diluted Automobile Exhaust''; author, Glenn D. Reschke. This procedure has been incorporated by reference. See § 91.6.

(ii) The HFID optimization procedures outlined in § 86.331–79 of this chapter.

(iii) Alternative procedures may be used if approved in advance by the Administrator.

(3) After the optimum flow rates have been determined, they are recorded for future reference.

(c) Initial and periodic calibration. Prior to introduction into service and monthly thereafter, or within one month prior to the certification test, calibrate the FID or HFID hydrocarbon analyzer on all normally used instrument ranges, using the steps in this paragraph. Use the same flow rate and pressures as when analyzing samples. Introduce calibration gases directly at the analyzer. An optional method for dilute sampling described in § 86.1310(b)(3)(i) of this chapter may be used.

(1) Adjust analyzer to optimize performance.

(2) Zero the hydrocarbon analyzer with purified synthetic air or zero-grade nitrogen.

(3) Calibrate on each used operating range with calibration gases having nominal concentrations between 10 and 90 percent of that range. A minimum of six evenly spaced points covering at least 80 percent of the 10 to 90 percent range (64 percent) is required (see following table).

Example calibration points (percent)	Acceptable for calibration?
20, 30, 40, 50, 60, 70	No, range covered is 50? percent, not 64 percent.
20, 30, 40, 50, 60, 70, 80, 90	Yes.
10, 25, 40, 55, 70, 85	Yes
10, 30, 50, 70, 90	No, though equally spaced and entire range covered, a minimum of six points is needed

(4) For each range calibrated, if the deviation from a least-squares best-fit straight line is two percent or less of the value at each data point, calculate concentration values by use of a single calibration factor for that range. If the deviation exceeds two percent at any point, use the best-fit non-linear equation which represents the data to within two percent of each test point to determine concentration.

(d) Oxygen interference optimization. Choose a range where the oxygen interference check gases will fall in the upper 50 percent. Conduct the test, as outlined in this paragraph, with the oven temperature set as required by the instrument manufacturer. Oxygen interference check gas specifications are found in § 91.312(d).

(1) Zero the analyzer.

(2) Span the analyzer with the 21 percent oxygen blend.

(3) Recheck zero response. If it has changed more than 0.5 percent of full scale repeat paragraphs (d)(1) and (d)(2) of this section to correct the problem.

(4) Introduce the five percent and 10 percent oxygen interference check gases.

(5) Recheck the zero response. If it has changed more than ± one percent of full scale, repeat the test.

(6) Calculate the percent of oxygen interference (designated as percent O_2I) for each mixture in paragraph (d)(4) of this section according to the following equation:

$$\text{percent } O_2I = \frac{\text{B Analyzer response (ppmC)}}{\text{B}} \times (100)$$

$$\text{analyzer response} = \left(\frac{\text{A}}{\text{\% of fullscale analyzer response due to A}} \times (\text{\% of fullscale analyzer response due to B}) \right)$$

Where:

A=hydrocarbon concentration (ppmC) of the span gas used in paragraph (d)(2) of this section.

B=hydrocarbon concentration (ppmC) of the oxygen interference check gases used in paragraph (d)(4) of this section.

(7) The percent of oxygen interference (designated as percent O_2I) must be less than ± three percent for all required oxygen interference check gases prior to testing.

(8) If the oxygen interference is greater than the specifications, incrementally adjust the air flow above and below the manufacturer's specifications, repeating paragraphs (d)(1) through (d)(7) of this section for each flow.

(9) If the oxygen interference is greater than the specification after adjusting the air flow, vary the fuel flow and thereafter the sample flow, repeating paragraphs (d)(1) through (d)(7) of this section for each new setting.

(10) If the oxygen interference is still greater than the specifications, repair or replace the analyzer, FID fuel, or burner air prior to testing. Repeat this section with the repaired or replaced equipment or gases.

§ 91.317 Carbon monoxide analyzer calibration.

(a) Calibrate the NDIR carbon monoxide analyzer described in this section.

(b) Initial and periodic interference check. Prior to its introduction into service and annually thereafter, check the NDIR carbon monoxide analyzer for response to water vapor and CO_2:

(1) Follow good engineering practices for instrument start-up and operation. Adjust the analyzer to optimize performance on the most sensitive range to be used.

(2) Zero the carbon monoxide analyzer with either purified synthetic air or zero-grade nitrogen.

(3) Bubble a mixture of three percent CO_2 in N_2 through water at room temperature and record analyzer response.

(4) An analyzer response of more than one percent of full scale for ranges

above 300 ppm full scale or more than three ppm on ranges below 300 ppm full scale requires corrective action. (Use of conditioning columns is one form of corrective action which may be taken.)

(c) Initial and periodic calibration. Calibrate the NDIR carbon monoxide analyzer prior to its introduction into service and monthly thereafter.

(1) Adjust the analyzer to optimize performance.

(2) Zero the carbon monoxide analyzer with either purified synthetic air or zero-grade nitrogen.

(3) Calibrate on each used operating range with carbon monoxide-in-N_2 calibration gases having nominal concentrations between 10 and 90 percent of that range. A minimum of six evenly spaced points covering at least 80 percent of the 10 to 90 range (64 percent) is required (see following table).

Example calibration points (percent)	Acceptable for calibration?
20, 30, 40, 50, 60, 70	No, range covered is 50 percent, not 64 percent.
20, 30, 40, 50, 60, 70, 80, 90	Yes.
10, 25, 40, 55, 70, 85	Yes.
10, 30, 50, 70, 90	No, though equally spaced and entire range covered, a minimum of six points is needed.

(4) Additional calibration points may be generated. For each range calibrated, if the deviation from a least-squares best-fit straight line is two percent or less of the value at each data point, concentration values may be calculated by use of a single calibration factor for that range. If the deviation exceeds two percent at any point, use the best-fit non-linear equation which represents the data to within two percent of each test point to determine concentration.

§ 91.318 Oxides of nitrogen analyzer calibration.

(a) Calibrate the chemiluminescent oxides of nitrogen analyzer as described in this section.

(b) Initial and periodic interference. Prior to its introduction into service, and monthly thereafter, check the chemiluminescent oxides of nitrogen analyzer for NO_2 to NO converter efficiency. Figure 2 in appendix B of this subpart is a reference for the following paragraphs:

(1) Follow good engineering practices for instrument start-up and operation. Adjust the analyzer to optimize performance.

(2) Zero the oxides of nitrogen analyzer with purified synthetic air or zero-grade nitrogen.

(3) Connect the outlet of the NO_X generator to the sample inlet of the oxides of nitrogen analyzer which has been set to the most common operating range.

(4) Introduce into the NO_X generator analyzer-system an NO-in-nitrogen (N_2) mixture with an NO concentration equal to approximately 80 percent of the most common operating range. The NO_2 content of the gas mixture must be less than 5 percent of the NO concentration.

(5) With the oxides of nitrogen analyzer in the NO mode, record the concentration of NO indicated by the analyzer.

(6) Turn on the NO_X generator O_2 (or air) supply and adjust the O_2 (or air) flow rate so that the NO indicated by the analyzer is about 10 percent less than indicated in paragraph (b)(5) of this section. Record the concentration of NO in this NO+O_2 mixture as value ''c.''

(7) Switch the NO_X generator to the generation mode and adjust the generation rate so that the NO measured on the analyzer is 20 percent of that measured in paragraph (b)(5) of this section. There must be at least 10 percent unreacted NO at this point. Record the concentration of residual NO as value ''d.''

(8) Switch the oxides of nitrogen analyzer to the NO_X mode and measure total NO_X. Record this value as ''a.''

(9) Switch off the NO_X generator but maintain gas flow through the system. The oxides of nitrogen analyzer will indicate the NO_X in the NO+O_2 mixture. Record this value as ''b.''

(10) Turn off the NO_X generator O_2 (or air) supply. The analyzer will now indicate the NO_X in the original NO-in-N_2 mixture. This value should be no more than 5 percent above the value indicated in paragraph (b)(4) of this section.

(11) Calculate the efficiency of the NO_X converter by substituting the concentrations obtained into the following equation:

$$\text{percent efficiency} = \left(1 + \frac{ab}{cd}\right) \times 100$$

Where:

a=concentration obtained in paragraph (b)(8) of this section,

b=concentration obtained in paragraph (b)(9) of this section,

c=concentration obtained in paragraph (b)(6) of this section,

d=concentration obtained in paragraph (b)(7) of this section.

If converter efficiency is not greater than 90 percent, corrective action is required.

(c) Initial and periodic calibration. Prior to its introduction into service, and monthly thereafter, calibrate the chemiluminescent oxides of nitrogen analyzer on all normally used instrument ranges. Use the same flow rate as when analyzing samples. Proceed as follows:

(1) Adjust analyzer to optimize performance.

(2) Zero the oxides of nitrogen analyzer with zero-grade air or zero-grade nitrogen.

(3) Calibrate on each normally used operating range with NO-in-N_2 calibration gases with nominal concentrations between 10 and 90 percent of that range. A minimum of six evenly spaced points covering at least 80 percent of the 10 to 90 percent range (64 percent) is required (see following table).

Example calibration points (percent)	Acceptable for calibration?
20, 30, 40, 50, 60, 70	No, range covered is 50 percent, not 64 percent.
20, 30, 40, 50, 60, 70, 80, 90	Yes.
10, 25, 40, 55, 70, 85	Yes.
10, 30, 50, 70, 90	No, though equally spaced and entire range covered, a minimum of six points is needed.

(4) Additional calibration points may be generated. For each range calibrated, if the deviation from a least-squares best-fit straight line is two percent or less of the value at each data point, concentration values may be calculated by use of a single calibration factor for that range. If the deviation exceeds two percent at any point, use the best-fit non-linear equation which represents the data to within two percent of each test point to determine concentration.

(d) The initial and periodic interference, system check, and calibration test procedures specified in § 86.332–79 of this chapter may be used in lieu of the procedures specified in this section.

§ 91.319 NO_X converter check.

(a) The efficiency of the converter used for the conversion of NO_2 to NO is tested as given in paragraphs (a)(1) through (a)(8) of this section (see Figure 2 in appendix B to this subpart).

(1) Using the test setup as shown in Figure 2 in appendix B to this subpart (see also § 91.318 of this chapter) and the procedures described in paragraphs (a)(2) through (a)(8) of this section, test the efficiency of converters by means of an ozonator.

(2) Calibrate the HCLD in the most common operating range following the manufacturer's specifications using zero and span gas (the NO content of which must amount to about 80 percent of the operating range and the NO_2 concentration of the gas mixture less than five percent of the NO concentration). The NO_X analyzer must be in the NO mode so that the span gas does not pass through the converter. Record the indicated concentration.

(3) Calculate the efficiency of the NO_X converter as described in § 91.318(b).

(4) Via a T-fitting, add oxygen continuously to the gas flow until the concentration indicated is about 20 percent less than the indicated calibration concentration given in paragraph (a)(2) of this section. Record the indicated concentration as ''c''. The ozonator is kept deactivated throughout the process.

(5) Activate the ozonator to generate enough ozone to bring the NO concentration down to about 20 percent (minimum 10 percent) of the calibration concentration given in paragraph (a)(2) of this section. Record the indicated concentration as ''d''.

Note: If, with the analyzer in the most common range the NO_X converter cannot give a reduction from 80 percent to 20 percent, then use the highest range which will give the reduction.

(6) Switch the NO analyzer to the NO_X mode, which means that the gas mixture (consisting of NO, NO_2, O_2 and N_2) now passes through the converter. Record the indicated concentration as ''a''.

(7) Deactivate the ozonator. The mixture of gases described in paragraph (a)(6) of this section passes through the converter into the detector. Record the indicated concentration as ''b''.

(8) Switched to NO mode with the ozonator deactivated, the flow of oxygen or synthetic air is also shut off. The NO_X reading of the analyzer may not deviate by more than ± five percent of the theoretical value of the figure given in paragraph (a)(2) of this section.

(b) The efficiency of the converter must be tested prior to each calibration of the NO_X analyzer.

(c) The efficiency of the converter may not be less than 90 percent.

§ 91.320 Carbon dioxide analyzer calibration.

(a) Prior to its introduction into service, and monthly thereafter, or within one month prior to the certification test, calibrate the NDIR carbon dioxide analyzer as follows:

(1) Follow good engineering practices for instrument start-up and operation. Adjust the analyzer to optimize performance.

(2) Zero the carbon dioxide analyzer with either purified synthetic air or zero-grade nitrogen.

(3) Calibrate on each normally used operating range with carbon dioxide-in-N_2 calibration or span gases having nominal concentrations between 10 and 90 percent of that range. A minimum of six evenly spaced points covering at least 80 percent of the 10 to 90 percent range (64 percent) is required (see following table).

Example calibration points (percent)	Acceptable for calibration?
20, 30, 40, 50, 60, 70	No, range covered is 50 percent, not 64 percent.
20, 30, 40, 50, 60, 70, 80, 90	Yes.
10, 25, 40, 55, 70, 85	Yes.
10, 30, 50, 70, 90	No, though equally spaced and entire range covered, a minimum of six points is needed.

(4) Additional calibration points may be generated. For each range calibrated, if the deviation from a least-squares best-fit straight line is two percent or less of the value at each data point, concentration values may be calculated by use of a single calibration factor for that range. If the deviation exceeds two percent at any point, use the best-fit non-linear equation which represents the data to within two percent of each test point to determine concentration.

(b) The initial and periodic interference, system check, and calibration test procedures specified in §§ 86.316, 86.319, 86.320, 86.321, and 86.322 of this chapter may be used in lieu of the procedures in this section.

§ 91.321 NDIR analyzer calibration.

(a) *Detector optimization.* If necessary, follow the manufacturer's instructions for initial start-up and basic operating adjustments.

(b) *Calibration curve.* Develop a calibration curve for each range used as follows:

(1) Zero the analyzer.

(2) Span the analyzer to give a response of approximately 90 percent of full-scale chart deflection.

(3) Recheck the zero response. If it has changed more than 0.5 percent of full scale, repeat the steps given in paragraphs (b)(1) and (b)(2) of this section.

(4) Record the response of calibration gases having nominal concentrations between 10 and 90 percent of full-scale concentration. A minimum of six evenly spaced points covering at least 80 percent of the 10 to 90 percent range (64 percent) is required (see following table).

Example calibration points (percent)	Acceptable for calibration?
20, 30, 40, 50, 60, 70	No, range covered is 50 percent, not 64 percent.
20, 30, 40, 50, 60, 70, 80, 90	Yes.

Example calibration points (percent)	Acceptable for calibration?
10, 25, 40, 55, 70, 85	Yes.
10, 30, 50, 70, 90	No, though equally spaced and entire range covered, a minimum of six points is needed.

(5) Generate a calibration curve. The calibration curve must be of fourth order or less, have five or fewer coefficients, and be of the form of equation (1) or (2). Include zero as a data point. Compensation for known impurities in the zero gas can be made to the zero-data point. The calibration curve must fit the data points within two percent of point or one percent of full scale, whichever is less.

$$y = Ax^4 + Bx^3 + Cx^2 + Dx + E \quad (1)$$

$$y = \frac{x}{Ax^4 + Bx^3 + Cx^2 + Dx + E} \quad (2)$$

y=concentration
x=chart deflection

(6) Option. A new calibration curve need not be generated if:

(i) A calibration curve conforming to paragraph (b)(5) of this section exists;

(ii) The responses generated in paragraph (b)(4) of this section are within one percent of full scale or two percent of point, whichever is less, of the responses predicted by the calibration curve for the gases used in paragraph (b)(4) of this section.

(7) If multiple range analyzers are used, the lowest range used must meet the curve fit requirements below 15 percent of full scale.

(c) *Linear calibration criteria.* If any range is within two percent of being linear, a linear calibration may be used. To determine if this criterion is met:

(1) Perform a linear least-square regression on the data generated. Use an equation of the form y=mx, where x is the actual chart deflection and y is the concentration.

(2) Use the equation z=y/m to find the linear chart deflection (designated as z) for each calibration gas concentration (designated as y).

(3) Determine the linearity (designated as percent L) for each calibration gas by:

$$\text{percent L} = \frac{(zx)}{\text{Fullscale linear chart deflection}}(100)$$

(4) The linearity criterion is met if the percent L is less than ± two percent for each data point generated. For each emission test, use a calibration curve of the form Y=mx. The slope (designated as m) is defined for each range by the spanning process.

§ 91.322 Calibration of other equipment.

Calibrate other test equipment as often as required by the manufacturer or as necessary according to good engineering practice.

§ 91.323 Analyzer bench checks.

(a) Prior to initial use and after major repairs, verify that each analyzer complies with the specifications given in Table 2 in appendix A to this subpart.

(b) If a stainless steel NO_2 to NO converter is used, condition all new or replacement converters. The conditioning consists of either purging the converter with air for a minimum of four hours or until the converter efficiency is greater than 90 percent. The converter must be at operational temperature while purging. Do not use this procedure prior to checking converter efficiency on in-use converters.

§ 91.324 Analyzer leakage check.

(a) *Vacuum side leak check.* (1) Check any location within the analysis system where a vacuum leak could affect the test results.

(2) The maximum allowable leakage rate on the vacuum side is 0.5 percent of the in-use flow rate for the portion of the system being checked. The analyzer flows and bypass flows may be used to estimate the in-use flow rates.

(3) The sample probe and the connection between the sample probe and valve V2 (see Figure 1 in appendix B of this subpart) may be excluded from the leak check.

(b) *Pressure side leak check.* Substantial leaks of the sample on the pressure side of the system may impact sample integrity if the leaks are of sufficient magnitude. As a safety precaution, it is good engineering practice to perform periodic pressure side leak checks on the sampling system.

§ 91.325 Analyzer interference checks.

(a) Gases present in the exhaust other than the one being analyzed can interfere with the reading in several ways. Positive interference occurs in NDIR and PMD instruments when the interfering gas gives the same effect as the gas being measured, but to a lesser degree. Negative interference occurs in NDIR instruments by the interfering gas broadening the absorption band of the measured gas, and in CLD instruments by the interfering gas quenching the radiation. The interference checks described in this section are to be made initially and after any major repairs that could affect analyzer performance.

(b) CO analyzer water and CO_2 interference checks. Bubble through water at room temperature a CO_2 span gas having a concentration of between 80 percent and 100 percent inclusive of full scale of the maximum operating range used during testing and record the analyzer response. For dry measurements, this mixture may be introduced into the sample system prior to the water trap. The analyzer response must not be more than one percent of full scale for ranges equal to or above 300 ppm or more than three ppm for ranges below 300 ppm.

(c) NO_X analyzer quench check. The two gases of concern for CLD (and HCLD) analyzers are CO_2 and water vapor. Quench responses to these two gases are proportional to their concentrations and, therefore, require test techniques to determine quench at the highest expected concentrations experienced during testing.

(1) NO_X analyzer CO_2 quench check. (i) Pass a CO_2 span gas having a concentration of 80 percent to 100 percent of full scale of the maximum operating range used during testing through the CO_2 NDIR analyzer and record the value as ''a.''

(ii) Dilute the CO_2 span gas approximately 50 percent with NO span gas and pass through the CO_2 NDIR and CLD (or HCLD). Record the CO_2 and NO values as ''b'' and ''c'', respectively.

(iii) Shut off the CO_2 and pass only the NO span gas through the CLD (or HCLD). Record the NO value recorded as ''d.''

(iv) Calculate the percent CO_2 quench as follows, which may not exceed three percent:

$$\text{percent } CO_2 \text{ quench} = 100 \times \left(1 \frac{(c \times a)}{(d \times a)(d \times b)}\right) \times (a / b)$$

Where:
a=Undiluted CO_2 concentration (percent)
b=Diluted CO_2 concentration (percent)
c=Diluted NO concentration (ppm)
d=Undiluted NO concentration (ppm)

(2) NO_X analyzer water quench check. (i) This check applies to wet measurements only. Pass an NO span gas having a concentration of 80 percent to 100 percent of full scale of a normal operating range through the CLD (or HCLD). Record the response as ''D.'' Bubble through water at room temperature the NO span gas and pass it through the CLD (or HCLD). Record the analyzers response as ''AR.'' Determine and record the analyzers absolute operating pressure and the bubbler water temperature. (It is important that the NO span gas contains minimal NO_2 concentration for this check. No allowance for absorption of NO_2 in water has been made in the following quench calculations.)

(ii) Calculations for water quench must consider dilution of the NO span gas with water vapor and scaling of the water vapor concentration of the mixture to that expected during testing. Determine the mixture's saturated vapor pressure (designated as ''Pwb'') that corresponds to the bubbler water temperature. Calculate the water concentration (''Z1'', percent) in the mixture by the following equation:

$$Z1=100\times(Pwb/GP)$$

Where:
GP=the analyzer's standard operating pressure (pascals)

(iii) Calculate the expected dilute NO span gas and water vapor mixture concentration (designated as ''D1'') by the following equation:

$$D1=D\times(1Z1/100)$$

§ 91.326 Pre- and post-test analyzer calibration.

Calibrate the operating range of each analyzer used during the test prior to and after each test in accordance with the following procedure (A chronic need for parameter adjustment can indicate a need for instrument maintenance.):

(a) Make the calibration using a zero gas and a span gas whose nominal value is between 80 percent and 100 percent of full scale, inclusive, of the measuring range.

(b) Use the same analyzer(s) flow rate and pressure as that used during exhaust emission test sampling.

(c) Warm-up and stabilize the analyzer(s) before the calibration is made.

(d) If necessary, clean and/or replace filter elements before calibration is made.

(e) Calibrate analyzer(s) as follows:

(1) Zero the analyzer using the appropriate zero gas. Adjust analyzer zero if necessary. Zero reading should be stable.

(2) Span the analyzer using the appropriate span gas for the range being calibrated. Adjust the analyzer to the calibration set point if necessary.

(3) Recheck zero and span set points.

(4) If the response of the zero gas or span gas differs more than one percent of full scale, then repeat paragraphs (e)(1) through (3) of this section.

§ 91.327 Sampling system requirements.

(a) *Sample component surface temperature.* For sampling systems which use heated components, use engineering judgment to locate the coolest portion of each component (pump, sample line section, filters, and so forth) in the heated portion of the sampling system that has a separate source of power or heating element. Monitor the temperature at that location. If several components are within an oven, then only the surface temperature of the component with the largest thermal mass and the oven temperature need be measured.

(b) If water is removed by condensation, monitor the sample gas temperature or sample dew point either within the water trap or downstream. It may not exceed 7 °C.

§ 91.328 Measurement equipment accuracy/calibration frequency table.

(a) The accuracy of measurements must be such that the maximum tolerances shown in Table 2 in appendix A to this subpart are not exceeded.

(b) Calibrate all equipment and analyzers according to the frequencies shown in Table 2 in appendix A to this subpart.

(c) Prior to initial use and after major repairs, bench check each analyzer (see § 91.323).

(d) Calibrate as specified in § 91.306 and §§ 91.315 through 91.322.

(e) At least monthly, or after any maintenance which could alter calibration, perform the following calibrations and checks.

(1) Leak check the vacuum side of the system (see § 91.324(a)).

(2) Verify that the automatic data collection system (if used) meets the requirements found in Table 2 in appendix A to this subpart.

(3) Check the fuel flow measurement instrument to insure that the specifications in Table 2 in appendix A to this subpart are met.

(f) Verify that all NDIR analyzers meet the water rejection ratio and the CO_2 rejection ratio as specified in § 91.325.

(g) Verify that the dynamometer test stand and power output instrumentation meet the specifications in Table 2 in appendix A to this subpart.

§ 91.329 Catalyst thermal stress test.

(a) *Oven characteristics.* The oven used for termally stressing the test catalyst must be capable of maintaining a temperature of 500 °C ± 5 °C and 1000 °C10 °C.

(b) *Evaluation gas composition.* (1) A synthetic exhaust gas mixture is used for evaluating the effect of thermal stress on catalyst conversion efficiency.

(2) The synthetic exhaust gas mixture must have the following composition:

Constituent	Volume percent	Parts per million
Carbon Monoxide [1]	1	
Oxygen	1.3	
Carbon Dioxide	9	

Constituent	Volume percent	Parts per million
Water Vapor	10	
Sulfur Dioxide		20
Oxides of Nitrogen		280
Hydrogen		3500
Hydrocarbon [1, 2]		4000
Nitrogen=Balance		

[1] Alternatively, the carbon monoxide and hydrocarbon proportions of the mixture may be changed to 1.2% and 4650 ppm, respectively (using on of these alternative concentrations requires that the other be used simultaneously).
[2] Propylene/propane ratio=2/1.

Appendix A to Subpart D of Part 91—Tables

TABLE 1.—SYMBOLS USED IN SUBPARTS D AND E

Symbol	Term	Unit
A_{YM}	Final weighted emission test results	g/kW-hr
C_3H_8	Propane	
C_B	Concentration of emission in background sample	ppm
C_D	Concentration of emission in dilute sample	ppm
CO	Carbon monoxide	
CO_2	Carbon dioxide	
conc	Concentration (ppm by volume)	ppm
D_{XX}	Density of a specific emission (XX)	g/m^3
DXX	Volume concentration of a specific emission (XX) on a dry basis	percent
DF	Dilution factor of dilute exhaust.	
D1	Water vapor mixture concentration	percent
f	Engine specific parameter considering atmospheric conditions	
G_{AIRD}	Intake air mass flow rate on dry basis	kg/h
G_{Fuel}	Fuel mass flow rate	kg/h
GP	Analyzer standard operating pressure	Pa
G_s	Mass of carbon measured during a sampling period	g
H	Absolute humidity (water content related to dry air)	gr/kg
H_2	Hydrogen	
i	Subscript denoting an individual mode	
IT	Indicated torque	N-m
K	Wet to dry conversion factor	
K_H	Humidity correction factor	
K_V	Calibration coefficient for critical flow venturi	
M_{XX}	Molecular weight of a specific molecule(XX)	g/mole
mass	Pollutant mass flow	g/h
M_{FUEL}	Mass of fuel consumed during a sampling period	g
N	Pump revolutions during test period	revs
N_2	Nitrogen	
NO	Nitric oxide	
NO_2	Nitrogen dioxide	
NO_X	Oxides of nitrogen	
O_2	Oxygen	
O_2I	Oxygen concentration of the burner air	percent
P	Absolute pressure	kPa
P_{AUX}	Declared total power absorbed by auxiliaries fitted for the test	kW
P_B	Total barometric pressure (average of the pre-test and post-test values)	kPa
P_{dew}	Test ambient saturation vapor pressure at the dew point	kPa
P_e	Absolute pump outlet pressure	kPa
P_{ED}	Pressure drop between the inlet and throat of metering venturi	kPa
P_i	$P_i=P_{M,i} + P_{AUX,i}$	
P_M	Maximum power measured at the test speed under test conditions	kW
P_P	Absolute pump inlet pressure	kPa
P_{PI}	Inlet pressure depression of venturi or pump	kPa
P_{PO}	Pressure head at CVS pump outlet	kPa
P_s	Dry atmospheric pressure	kPa
P_V	Absolute venturi inlet pressure	kPa
P_{wb}	Saturated vapor pressure	Pa
Q_C	Volumetric flow rate of dilute exhaust through CVS at STP	m^3/hr
Q_S	Gas flow rate	m^3/min
R_{STP}	Ideal gas constant at STP	m^3/mole
R_2	Fuel carbon weight fraction	g/g
STP	Standard temperature and pressure	
t	Elapsed time for test period	sec.
T	Absolute temperature at air inlet	°C
T_a	Ambient temperature	°C
T_{EI}	Air temperature in to metering venturi or flowmeter	°C
T_K	Absolute temperature	K

TABLE 1.—SYMBOLS USED IN SUBPARTS D AND E—Continued

Symbol	Term	Unit
T_P	Absolute pump inlet temperature	°C
T_{PI}	Air temperature at CVS pump inlet	°C
T_{PO}	Air temperature at CVS pump outlet	°C
T_V	Absolute venturi inlet temperature	°C
V_O	Pump flow	m^3/rev
W	Average mass flow of emissions	g/hr
W_{XX}	Mass rate of specific emission (XX)	g/hr
WXX	Volume concentration in exhaust of specific emission (XX) on wet basis	ppm, ppmC, %
WF	Weighing factor	
Z1	Water concentration	percent
α	Fuel specific factor representing the hydrogen to carbon ratio.	

TABLE 2.—MEASUREMENT ACCURACY CALIBRATION FREQUENCY

No.	Item	Permissible deviation from reading [1]		Calibration frequency
		non-idle	idle	
1	Engine speed	±2%	±2%	Monthly.
2	Torque	±5%		Monthly.
3	Fuel consumption	±1%	±5%	Monthly.
4	Air consumption	±2%	±5%	As required.
5	Coolant temperature	±2° C	Same	As required.
6	Lubricant temperature	±2° C	Same	As required.
7	Exhaust back pressure	±5%	Same	As required.
8	Inlet depression	±5%	Same	As required.
9	Exhaust gas temperature	±15° C	Same	As required.
10	Air inlet temperature (combustion air)	±2° C	Same	As required.
11	Atmospheric pressure	±0.5%	Same	As required.
12	Humidity (combustion air) (relative)	±3.0%	Same	As required.
13	Fuel temperature	±2° C	Same	As required.
14	Temperature with regard to dilution system	±2° C	Same	As required.
15	Dilution air humidity	±3% absolute	Same	As required.
16	HC analyzer	±2% [2]	Same	Monthly.
17	CO analyzer	±2% [2]	Same	Monthly.
18	NO_X analyzer	±2% [2]	Same	Monthly.
19	NO_X converter check	90%	Same	Monthly.
20	CO_2 analyzer	±2% [2]	Same	Monthly.

[1] All accuracy requirements pertain to the final recorded value which is inclusive of the data acquisition system.
[2] If reading is under 100 ppm then the accuracy shall be ±2 ppm.

TABLE 3.—TEST FUEL SPECIFICATIONS

Item	Property	Tolerance	Procedure (ASTM) [1]
Sulfur, ppm max	1000		D 2622
Benzene, max. percent	1.5		D 3606
RVP, psi	8.6	±0.6	D 323
Octane, R+M/2	89.9	±3.1	D 2699 D 2700
IBP, ° C	32.8	±11.0	D 86
10% point, ° C	53.3	±5.5	D 86
50% point, ° C	101.7	±8.3	D 86
90% point, ° C	160.0	±11.1	D 86
End Point, max. ° C	212.8		D 86
Phosphorus, g/l, max	0.02		D 3231
Lead, g/l, max	0.02		
Manganese, g/l, max	0.004		
Aromatics, max. percent	35		D 1319
Olefins, max. percent	10		D 1319
Saturates, percent	remain		D 1319

[1] All ASTM Procedures in this table have been incorporated by reference. See § 91.6.

BILLING CODE 6560–50–P

Appendix B to Subpart D of Part 91—Figures

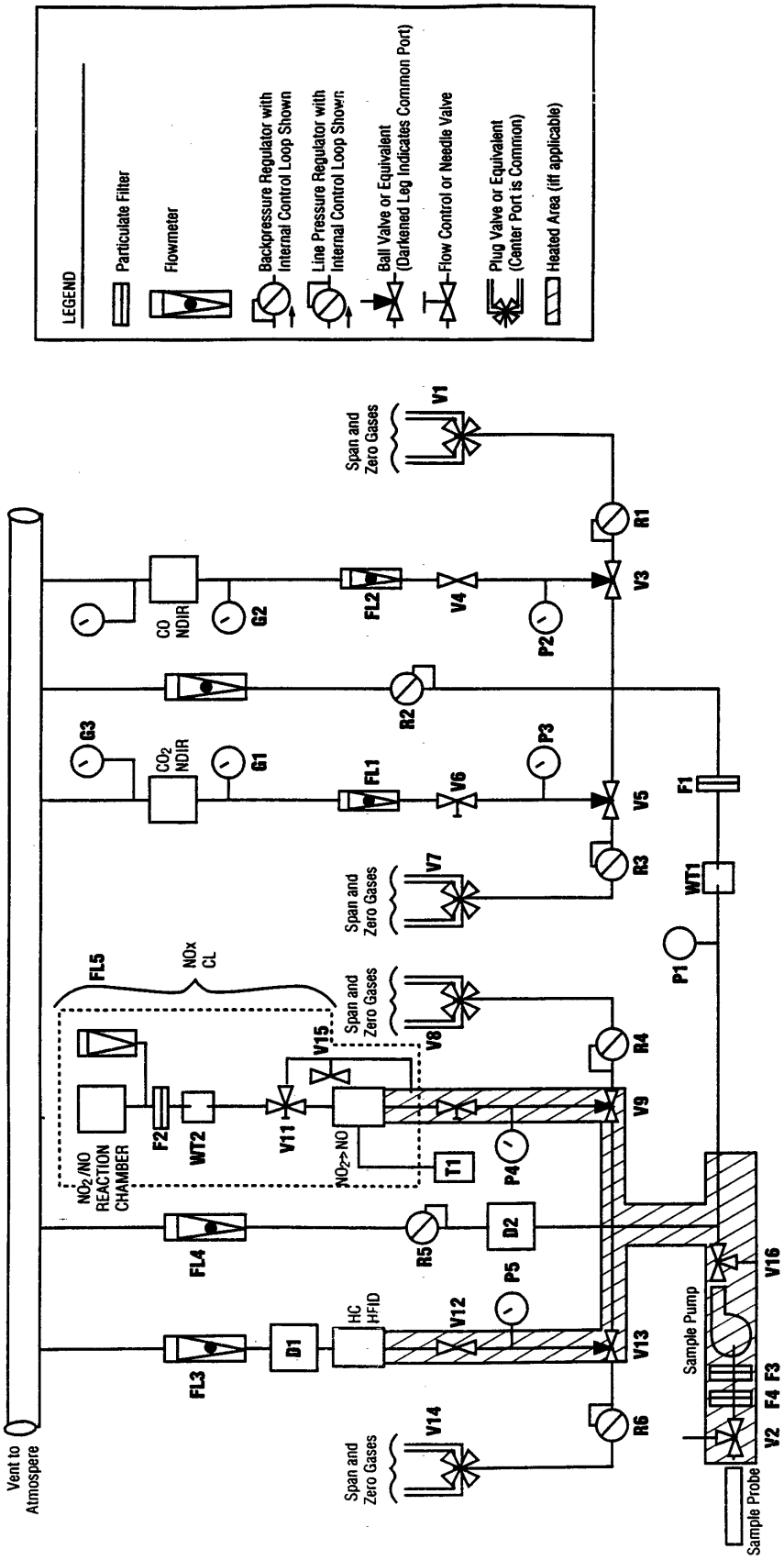

Figure 1. — Exhaust Gas Sampling and Analytical Train, Continuous Sampling

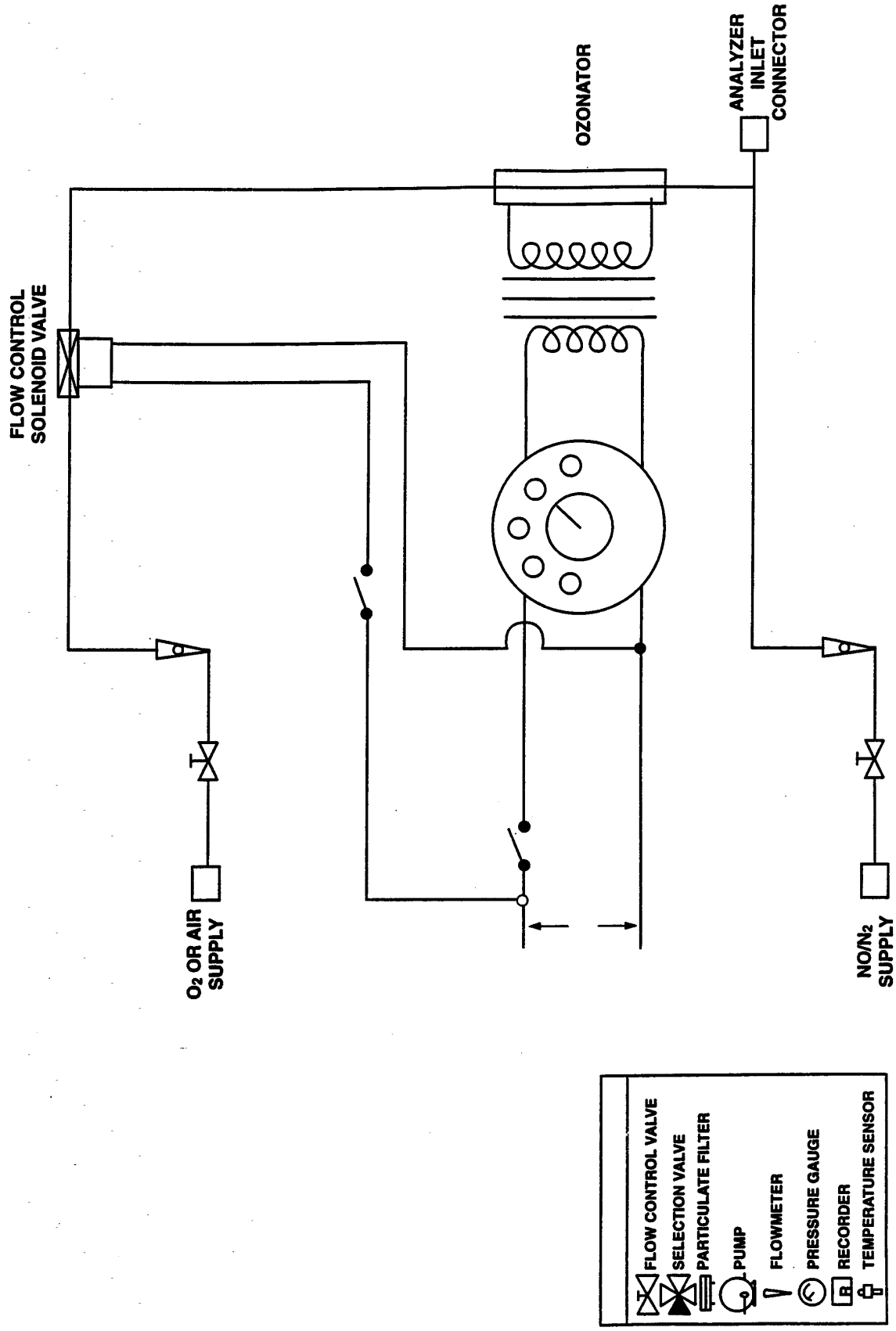

Figure 2. — NOx Converter Efficiency Detector

BILLING CODE 6560–50–C

Subpart E—Gaseous Exhaust Test Procedures

§ 91.401 Scope; applicability.

(a) This subpart describes the procedures to follow in order to perform exhaust emission tests on new marine gasoline-fueled spark-ignition propulsion engines subject to the provisions of subpart A of this part 91. Provisions specific to raw gas sampling are in §§ 91.414 through 91.419, provisions specific to constant volume sampling are in §§ 91.420 through 91.426. All other sections in this subpart apply to both raw gas sampling and constant volume sampling unless indicated otherwise.

(b) Requirements for emission test equipment and calibrating this equipment are found in subpart D of this part.

§ 91.402 Definitions.

The definitions in §§ 91.3, 91.102, and 91.302 apply to this subpart.

§ 91.403 Symbols and abbreviations.

(a) The abbreviations in § 91.5 apply to this subpart.

(b) The symbols in Table 1 in appendix A to subpart D apply to this subpart.

§ 91.404 Test procedure overview.

(a) The test consists of prescribed sequences of engine operating conditions to be conducted on an engine dynamometer or equivalent load and speed measurement device. The exhaust gases generated during engine operation are sampled either raw or dilute, and specific components are analyzed through the analytical system.

(b) The tests are designed to determine the brake-specific emissions of hydrocarbons, carbon monoxide, and oxides of nitrogen. The test consists of one idle mode and four power modes with an exponential relationship between torque and speed which span the typical operating range of spark-ignition marine propulsion engines. These procedures require the determination of the concentration of each pollutant, fuel flow, and the power output during each mode. The measured values are weighted and used to calculate the grams of each pollutant emitted per brake kilowatt hour (g/kW-hr).

(c)(1) When an engine is tested for exhaust emissions the complete engine is tested, with all emission control devices installed and functioning.

(2) Additional accessories (for example, oil cooler, alternators, and so forth) may be installed, but such accessory loading will be considered parasitic in nature and observed power is used in the emission calculation.

(d) All emission control systems installed on or incorporated in the application must be functioning during all procedures in this subpart. In cases of component malfunction or failure, no maintenance is allowed without prior approval from the Administrator in accordance with § 91.118.

§ 91.405 Recorded information.

(a) Record the information described in this section for each test where applicable.

(b) *Test data; general.* (1) Engine identification number.

(2) Engine emissions control system.

(3) Test operator(s).

(4) Number of hours of operation accumulated on the engine prior to beginning the warm-up portion of the test (to the nearest tenth hour).

(5) Fuel identification.

(6) For two-stroke engines, fuel/oil mixture ratio.

(7) Date of most recent analytical assembly calibration.

(8) All pertinent instrument information such as tuning, gain, serial numbers, detector number, and calibration curve numbers. As long as this information is traceable, it may be summarized by system number or analyzer identification numbers.

(c) *Test data; pre-test.* (1) Date and time of day.

(2) Test number.

(3) Barometric pressure; as an option, barometric pressure can be measured as a modal measurement instead of or in addition to a pre- and post-test measurement.

(4) Recorder chart or equivalent. Identify for each test segment zero traces for each range used, and span traces for each range used.

(d) *Test data; modal.* (1) Recorder chart or equivalent. Identify for each test mode the emission concentration traces and the associated analyzer range(s).

(2) Observed engine torque.

(3) Observed engine rpm.

(4) Engine intake air flow, if applicable.

(5) Test cell temperature and humidity for each mode.

(6) For raw gas testing; fuel flow for each mode. Fuel flow measurement is not required for dilute testing but is allowed. If the fuel flow measurement is a volume measurement system, record the fuel temperature in the measurement system for fuel density corrections to the mass flow rate. If the fuel temperature is within 3 °C of the calibration temperature, no density correction is required.

(7) Engine intake temperature and humidity for each mode, if applicable.

(8) Exhaust sample line temperature, if applicable.

(e) *Test data; post-test.* (1) Recorder chart or equivalent. Identify the hang-up check.

(2) Recorder chart or equivalent. Identify the zero traces for each range used and the span traces for each range used.

(3) Total number of hours of operation accumulated on the engine (to the nearest tenth hour).

(4) Barometric pressure, post-test segment.

§ 91.406 Engine parameters to be measured and recorded.

Measure or calculate, then record, the engine parameters in Table 1 in appendix A of this subpart.

§ 91.407 Engine inlet and exhaust systems.

(a) The marine engine manufacturer is liable for emission compliance over the full range of restrictions that are specified by the manufacturer for that particular engine.

(b) The air inlet filter system and exhaust muffler system combination used on the test engine must be the systems expected to yield the highest emission levels.

§ 91.408 Pre-test procedures.

(a) *Engine service accumulation and stabilization procedure.* Use the service accumulation procedure determined by the manufacturer for exhaust emission stabilizing of an engine, consistent with good engineering practice (see § 91.117).

(1) The manufacturer determines, for each engine family, the number of hours at which the engine exhaust emission control system combination is stabilized for emission testing. However, this stabilization procedure may not exceed 12 hours. The manufacturer must maintain, and provide to the Administrator upon request, a record of the rationale used in making this determination. If the manufacturer can document that, at some time prior to the full 12 hour service accumulation period, the engine emissions are decreasing for the remainder of the 12 hours, the service accumulation may be completed at that time. The manufacturer may elect to accumulate 12 hours on each test engine within an engine family without making this determination.

(2) During service accumulation, the fuel and lubricants specified in § 91.308 must be used.

(3) Engine maintenance during service accumulation is allowed only in accordance with § 91.117.

(b) *Engine pre-test preparation.* (1) Drain and charge the fuel tank(s) with

the specified test fuel (see § 91.308) to 50 percent of the tank's nominal capacity. If an external fuel tank is used, the engine fuel inlet system pressure must be typical of what the engine will see in use.

(2) Operate the engine on the dynamometer measuring the fuel consumption (fuel consumption required only for raw gas sampling method) and torque before and after the emission sampling equipment is installed, including the sample probe, using mode 1 from Table 2 in appendix A of this subpart. The emission sampling equipment may not significantly affect the operational characteristics of the engine (typically, the results should agree within five percent).

(c) *Analyzer pre-test procedures.* (1) If necessary, warm up and stabilize the analyzer(s) before calibrations are performed.

(2) Replace or clean the filter elements and then vacuum leak check the system per § 91.324(a). If necessary, allow the heated sample line, filters, and pumps to reach operating temperature.

(3) Perform the following system checks:

(i) If necessary, check the sample-line temperature. Heated FID sample line temperature must be maintained between 110 °C and 230 °C, a heated NO_X sample line temperature must be maintained between 60 °C and 230 °C.

(ii) Check that the system response time has been accounted for prior to sample collection data recording.

(iii) A hang-up check is permitted.

(4) Check analyzer zero and span before and after each test at a minimum. Further, check analyzer zero and span any time a range change is made or at the maximum demonstrated time span for stability for each analyzer used.

(d) Check system flow rates and pressures and reset if necessary.

§ 91.409 Engine dynamometer test run.

(a) Engine and dynamometer start-up.

(1) Only adjustments in accordance with § 91.118 may be made to the test engine prior to starting a test.

(2) If necessary, warm up the dynamometer as recommended by the dynamometer manufacturer ore good engineering practice.

(3) At the manufacturer's option, the engine can be run with the throttle in a fixed position or by using the engine's governor (if the engine is manufactured with a governor). In either case, the engine speed and load must meet the requirements specified in paragraph (b)(12) of this section.

(b) Each test consists of the following:

(1) Record the general test data as specified in § 91.405.

(2) Precondition the engine in the following manner;

(i) Operate the engine at idle for 2 to 3 minutes;

(ii) Operate the engine at a power greater than or equal to 50 percent power at the rated speed for 5 to 7 minutes;

(iii) Operate the engine at rated speed and maximum power for 25 to 30 minutes;

(iv) Option. For four-stroke engines, where appropriate, it is permitted to precondition the engine at rated speed and maximum power until the oil and water temperatures are stabilized. The temperatures are defined as stabilized if they are maintained within 2 percent of point for 2 minutes. The engine must be operated a minimum of 10 minutes for this option. This optional procedure may be substituted for step in paragraphs (b)(2)(iii) of this section;

(v) Option. If the engine has been operating on service accumulation for a minimum of 40 minutes, the service accumulation may be substituted for steps in paragraphs (b)(2) (i) through (iii) of this section.

(3) Record all pre-test data specified in § 91.405(c).

(4) Start the test cycle (see § 91.410) within 10 minutes of the completion of the steps required by paragraph (b)(2) of this section.

(5) During the first mode calculate the torque corresponding to 71.6, 46.5, and 25.3 percent of the maximum observed torque for the rated speed (see Table 2 in appendix A of this subpart).

(6) Once engine speed and load are set for a mode, run the engine for a sufficient period of time to achieve thermal stability. At the manufacturers option, determine and document the appropriate criterion for thermal stability for each engine family.

(7) Record all modal data specified in § 91.405(e) for a minimum time period of the last two minutes of each mode. Longer averaging periods are acceptable, but the data averaged must be from a continuous time period. The duration of time during which this data is recorded is referred to as the ''sampling period.'' The data collected during the sampling period is used for modal emission calculations.

(8) Continuously record the analyzer's response to the exhaust gas during the sampling period.

(9) Modes may be repeated.

(10) If a delay of more than one hour occurs between the end of one mode and the beginning of another mode, the test is void and must be restarted as described at paragraph (b)(1) of this section.

(11) The engine speed and load must be maintained within the requirements of § 91.410 during the sampling period for each mode. If this requirement is not met, the mode is void and must be restarted.

(12) If at any time during a mode, the test equipment malfunctions or the specifications in § 91.410 can not be met, the test is void, and must be aborted. Corrective action should be taken and the test restarted.

(13) Fuel flow and air flow during the idle condition may be determined just prior to or immediately following the dynamometer sequence, if longer times are required for accurate measurements. If the dilute sampling method (Constant Volume Sampling) is used, neither fuel flow nor air flow measurements are required.

(c) Exhaust gas measurements. (1) Measure HC, CO, CO_2, and NO_X concentration in the exhaust sample.

(2) Each analyzer range that may be used during a test segment must have the zero and span responses recorded prior to the start of the test. Only the range(s) used to measure the emissions during the test is required to have its zero and span recorded after the completion of the test. Depending on the stability of each individual analyzer, more frequent zero checks or spans between modes may be necessary.

(3) It is permitted to change filter elements between test segments.

(4) A leak check is permitted between modes.

(5) A hang-up check is permitted between modes (see § 91.413).

(6) If, during the emission measurement portion of a mode, the value of the gauges downstream of the NDIR analyzer(s) G3 or G4 (See Figure 1 in appendix B of subpart D of this part) differs by more than ±0.5 kPa, the mode is void.

§ 91.410 Engine test cycle.

(a) The 5-mode cycle specified in Table 2 in appendix A to this subpart shall be followed in dynamometer operation tests of marine engines.

(b) During each non-idle mode the specified speed and load shall be held to within ±50 rpm or ± two percent of point, whichever is greater. During each idle mode the engine speed shall be held within ±75 rpm or ± five percent of the manufacturers specified idle speed, whichever is greater. For direct drive products (no neutral gear), it is acceptable to have an accessory load on the engine during the idle mode provided that the engine speed is within ± five percent of the manufacturers specified idle speed and the accessory

load is representative of in use operation.

(c) If the operating conditions specified in paragraph (b) of this section for modes 2, 3, 4, and 5 cannot be maintained, the Administrator may authorize deviations from the specified load conditions. Such deviations shall not exceed 10 percent of the maximum torque at the test speed. The minimum deviations, above and below the specified load, necessary for stable operation shall be determined by the manufacturer and approved by the Administrator prior to the test run.

(d) Do not include power generated during the idle mode (mode 5) in the calculation of emissions results.

§ 91.411 Post-test analyzer procedures.

(a) Perform a hang-up check within 60 seconds of the completion of the last mode in the test. Use the following procedure:

(1) Introduce a zero-grade gas or room air into the sample probe or valve V2 (see Figure 1 in appendix B of subpart D of this part) to check the ''hangup zero'' response. Simultaneously start a time measurement.

(2) Select the lowest HC range used during the test.

(3) Within four minutes of beginning the time measurement in paragraph (a)(1) of this section, the difference between the zero gas response and the hang-up zero response shall not be greater than 5.0 percent of full scale or 10 ppmC whichever is greater.

(b) Begin the analyzer span checks within six minutes after the completion of the last mode in the test. Record for each analyzer the zero and span response for each range used during the preceding test or test segment.

(c) If during the test, the filter element(s) were replaced or cleaned, a vacuum check must be performed per § 91.324(a) immediately after the span checks. If the vacuum side leak check does not meet the requirements of § 91.324(a) the test is void.

(d) Read and record the post-test data specified in § 91.405(e).

(e) For a valid test, the analyzer drift between the before-segment and after-segment span checks for each analyzer must meet the following requirements:

(1) The span drift (defined as the change in the difference between the zero response and the span response) must not exceed two percent of full-scale chart deflection for each range used.

(2) The zero response drift must not exceed two percent of full-scale chart deflection for each range used above 155 ppm (or ppm C), or three percent of full-scale chart deflection for each range below 155 ppm (or ppm C).

§ 91.412 Data logging.

(a) A computer or any other automatic data collection (ADC) device(s) may be used as long as the system meets the requirements of this subpart.

(b) Determine from the data collection records the analyzer responses corresponding to the end of each mode.

(c) Record data at a minimum of one Hz (one time per second).

(d) Determine the final value for power by averaging the individually calculated power points for each value of speed and torque recorded during the sampling period. As an alternative, the final value for power can be calculated from the average values for speed and torque, collected during the sampling period.

(e) Determine the final value for CO_2, CO, HC, and NO_X concentrations by averaging the concentration of each point taken during the sample period for each mode.

§ 91.413 Exhaust sample procedure—gaseous components.

(a) Automatic data collection equipment requirements. The analyzer response may be read by automatic data collection (ADC) equipment such as computers, data loggers, etc. If ADC equipment is used the following is required:

(1) For dilute grab (''bag'') analysis, the analyzer response must be stable at greater than 99 percent of the final reading for the dilute exhaust sample bag. A single value representing the average chart deflection over a 10-second stabilized period shall be stored.

(2) For continuous analysis systems, a single value representing the average integrated concentration over a cycle shall be stored. Alternatively, the ADC may store the individual instantaneous values collected during the measurement period.

(3) The chart deflections or average integrated concentrations required in paragraphs (a)(1) and (a)(2) of this section may be stored on long-term computer storage devices such as computer tapes, storage discs, punch cards, and so forth, or they may be printed in a listing for storage. In either case a chart recorder is not required and records from a chart recorder, if they exist, need not be stored.

(4) If ADC equipment is used to interpret analyzer values, the ADC equipment is subject to the calibration specifications of the analyzer as if the ADC equipment is part of analyzer system.

(b) Data records from any one or a combination of analyzers may be stored as chart recorder records.

(c) Grab sample analysis. For dilute grab sample analysis perform the following sequence:

(1) Calibrate analyzers using the procedure described in § 91.326.

(2) Record the most recent zero and span response as the pre-analysis value.

(3) Measure HC, CO, CO_2, and NO_X background concentrations in the sample bag(s) and background sample bag(s) using the same flow rates and pressures.

(4) Good engineering practice dictates that analyzers used for continuous analysis should be operated such that the measured concentration falls between 15 percent and 100 percent of full scale.

(5) A post-analysis zero and span check of each range must be performed and the values recorded. The number of events that may occur between the pre and post checks is not specified. However, the difference between pre-analysis zero and span values (recorded in paragraph (c)(5) or (c)(6) of this section) versus those recorded for the post-analysis check may not exceed the zero drift limit or the span drift limit of 2 percent of full scale chart deflection for any range used. Otherwise the test is void.

(d) Continuous sample analysis. For continuous sample analysis, perform the following sequence:

(1) Calibrate analyzers using the procedures described in § 91.326.

(2) Leak check portions of the sampling system that operate at negative gauge pressures when sampling, and allow heated sample lines, filters, pumps, and so forth to stabilize at operating temperature.

(3) Option: Determine the hang-up for the FID or HFID sampling system:

(i) Zero the analyzer using zero air introduced at the analyzer port.

(ii) Flow zero air through the overflow sampling system. Check the analyzer response.

(iii) If the overflow zero response exceeds the analyzer zero response by two percent or more of the FID or HFID full-scale deflection, hang-up is indicated and corrective action must be taken (see paragraph (e) of this section).

(iv) The complete system hang-up check specified in paragraph (f) of this section is recommended as a periodic check.

(4) Obtain a stable zero reading.

(5) Good engineering practice dictates that analyzers used for continuous analysis should be operated such that the measured concentration falls between 15 percent and 100 percent of full scale.

(6) Record the most recent zero and span response as the pre-analysis values.

(7) Collect background HC, CO, CO_2, and NO_X in a sample bag (for dilute exhaust sampling only, see § 91.422).

(8) Perform a post-analysis zero and span check for each range used at the conditions specified in paragraph (d)(1) of this section. Record these responses as the post-analysis values.

(9) Neither the zero drift nor the span drift between the pre-analysis and post-analysis checks on any range used may exceed three percent for HC, or two percent for NO_X, CO, and CO_2, of full scale chart deflection, or the test is void. (If the HC drift is greater than three percent of full-scale chart deflection, hydrocarbon hang-up is likely.)

(10) Determine background levels of NO_X, CO, or CO_2 (for dilute exhaust sampling only) by the grab (''bag'') technique outlined in paragraph (c) of this section.

(e) Hydrocarbon hang-up. If HC hang-up is indicated, the following sequence may be performed:

(1) Fill a clean sample bag with background air.

(2) Zero and span the HFID at the analyzer ports.

(3) Analyze the background air sample bag through the analyzer ports.

(4) Analyze the background air through the entire sample probe system.

(5) If the difference between the readings obtained is two ppm or more, clean the sample probe and the sample line.

(6) Reassemble the sample system, heat to specified temperature, and repeat the procedure in paragraphs (e)(1) through (e)(5) of this section.

§ 91.414 Raw gaseous exhaust sampling and analytical system description.

(a) Schematic drawing. An example of a sampling and analytical system which may be used for testing under this subpart is shown in Figure 4 in appendix B of this subpart. All components or parts of components that are wetted by the sample or corrosive calibration gases shall be either chemically cleaned stainless steel or inert material (e.g., polytetrafluoroethylene resin). The use of ''gauge savers'' or ''protectors'' with nonreactive diaphragms to reduce dead volumes is permitted.

(b) Sample probe. (1) The sample probe shall be a straight, closed end, stainless steel, multi-hole probe. The inside diameter shall not be greater than the inside diameter of the sample line + 0.03 cm. The wall thickness of the probe shall not be greater than 0.10 cm. The fitting that attaches the probe to the exhaust pipe shall be as small as practical in order to minimize heat loss from the probe.

(2) The probe shall have a minimum of three holes. The spacing of the radial planes for each hole in the probe must be such that they cover approximately equal cross-sectional areas of the exhaust duct. The angular spacing of the holes must be approximately equal. The angular spacing of any two holes in one plane may not be 180° ± 20° (i.e., section C-C of Figure 1 in appendix B of this subpart). The holes should be sized such that each has approximately the same flow. If only three holes are used, they may not all be in the same radial plane.

(3) The exhaust gas probe must be located in a position which yields a well mixed, homogeneous sample of the engine exhaust. The probe must extend radially through the exhaust duct prior to where the exhaust mixes with the cooling water. The cooling water flow may be rerouted if necessary to obtain an emission sample provided that the modification has no significant effect on the performance or emissions characteristics of the engine. The probe must pass through the approximate center and must extend across at least 80 percent of the diameter of the duct. The exact position of the probe may vary from engine family to engine family.

(c) Sample transfer line. (1) The maximum inside diameter of the sample line shall not exceed 1.32 cm.

(2) If valve V2 in Figure 1 of appendix B of Subpart D of this part is used, the sample probe must connect directly to valve V2 in Figure 1 of appendix B of subpart D of this part. The location of optional valve V2 may not be greater than 1.22 m from the exhaust duct.

(3) The location of optional valve V16 in Figure 1 of appendix B of subpart D of this part may not be greater than 61 cm from the sample pump. The leakage rate for this section on the pressure side of the sample pump may not exceed the leakage rate specification for the vacuum side of the pump.

(d) Venting. All vents including analyzer vents, bypass flow, and pressure relief vents of regulators should be vented in such a manner to avoid endangering personnel in the immediate area.

(e) Any variation from the specifications in this subpart including performance specifications and emission detection methods may be used only with prior approval by the Administrator.

(f) Additional components, such as instruments, valves, solenoids, pumps, switches, and so forth, may be employed to provide additional information and coordinate the functions of the component systems.

(g) The following requirements must be incorporated in each system used for raw testing under this subpart.

(1) Take the sample for all components with one sample probe and split it internally to the different analyzers.

(2) Heat the sample transport system from the engine exhaust pipe to the HC analyzer for the raw gas sampling method as indicated in Figure 1 in appendix B of subpart D of this part. The NO_X analyzer for the raw gas sampling method may be heated as indicated in Figure 1 in appendix B of subpart D of this part. The HC analyzer and the NO_X analyzer for the dilute sampling method may be heated as indicated in Figure 1 in appendix B of subpart D of this part.

§ 91.415 Raw gaseous sampling procedures.

Fit all heated sampling lines with a heated filter to extract solid particles from the flow of gas required for analysis. The sample line for HC measurement must be heated. The sample line for CO, CO_2, and NO_X may be heated or unheated.

§ 91.416 Intake air flow measurement specifications.

(a) If used, the engine intake air flow measurement method used must have a range large enough to accurately measure the air flow over the engine operating range during the test. Overall measurement accuracy must be ± two percent of full-scale value of the measurement device for all modes except the idle mode. For the idle mode, the measurement accuracy shall be ± five percent or less of the full-scale value. The Administrator must be advised of the method used prior to testing.

(b) When an engine system incorporates devices that affect the air flow measurement (such as air bleeds, air injection, pulsed air, and so forth) that result in understated exhaust emission results, make corrections to the exhaust emission results to account for such effects.

§ 91.417 Fuel flow measurement specifications.

(a) Fuel flow measurement is required only for raw testing but is allowed for dilute testing.

(b) The fuel flow rate measurement instrument must have a minimum accuracy of ± two percent of full-scale flow rate for each measurement range used.

§ 91.418 Data evaluation for gaseous emissions.

For the evaluation of the gaseous emissions recording, record the last two minutes of each mode and determine the average values for HC, CO, CO_2, and NO_X during each mode from the average concentration readings determined from the corresponding calibration data.

§ 91.419 Raw emission sampling calculations.

(a) Derive the final test results through the steps described in this section.

(b) Air and fuel flow method. If both air and fuel flow mass rates are measured, the following equations are used to determine the weighted emission values for the test engine:

$$W_{NO_X} = \left(G_{AIRD} + G_{FUEL}\right) \times \frac{M_{NO_2}}{M_{exh}} \times WNO_X \times K_H \times \frac{1}{10^6}$$

$$W_{HC} = \left(G_{AIRD} + G_{FUEL}\right) \times \frac{M_{HC_{exh}}}{M_{exh}} \times WHC \times \frac{1}{10^6}$$

$$W_{CO} = \left(G_{AIRD} + G_{FUEL}\right) \times \frac{M_{CO}}{M_{exh}} \times WCO \times \frac{1}{10^2}$$

Where:

W_{HC} = Mass rate of HC in exhaust [g/hr],

G_{AIRD} = Intake air mass flow rate on dry basis [g/hr],

G_{FUEL} = Fuel mass flow rate [g/hr],

M_{HCexh} = Molecular weight of hydrocarbons in the exhaust; see the following equation:

$$M_{HC_{exh}} + 12.01 + 1.008 \times \alpha$$

Where:

α=Hydrocarbon/carbon atomic ratio of the fuel.

M_{exh}=Molecular weight of the total exhaust; see the following equation:

$$M_{exh} = \frac{M_{HC_{exh}} \times WHC}{10^6} + \frac{28.01 \times WCO}{10^2} + \frac{44.1 \times WCO_2}{10^2} + \frac{46.01 + WNO_X}{10^6} + \frac{2.016 \times WH_2}{10^2} + 18.01 \times (1 - K) + 28.01 \times \frac{\left[100 - \frac{WHC}{10^4} - WCO - WCO_2 \frac{WNO_X}{10^4} - WH_2 - 100 \times (1 - K)\right]}{10^2}$$

Where:

WHC = HC volume concentration in exhaust, ppmC wet

WCO = CO percent concentration in the exhaust, wet

DCO = CO percent concentration in the exhaust, dry

WCO_2 = CO_2 percent concentration in the exhaust, wet

DCO_2 = CO_2 percent concentration in the exhaust, dry

WNO_X = NO volume concentration in exhaust, ppm wet

WH_2 = H_2 percent concentration in exhaust, wet

K = correction factor to be used when converting dry measurements to a wet basis. Therefore, wet concentration = dry concentration × K, where K is:

$$\frac{1}{1 + 0.005 \times \left(DCO + DCO_2\right) \times \alpha - 0.01 \times DH_2}$$

DH_2 = H_2 percent concentration in exhaust, dry, calculated from the following equation:

$$DH_2 = \frac{0.5 \times \alpha \times DCO \times \left(DCO + DCO_2\right)}{DCO + \left(3 \times DCO_2\right)}$$

W_{CO} = Mass rate of CO in exhaust, [g/hr]

M_{CO} = Molecular weight of CO = 28.01

W_{NOx} = Mass rate of NO_X in exhaust, [g/hr]

M_{NO2} = Molecular weight of NO_2 = 46.01

K_H = Factor for correcting the effects of humidity on NO_2 formation for four-stroke gasoline engines; see the equation below:

$$K_H = \frac{1}{1 - 0.0329 \times (H - 10.71)}$$

Where:

H = specific humidity of the intake air in grams of moisture per kilogram of dry air.

For two-stroke gasoline engines, KH should be set to 1.

(c) Fuel flow method. The following equations are to be used when fuel flow is selected as the basis for mass emission calculations using the raw gas method.

$$W_{HC} = \frac{G_{FUEL}}{TC} \times \frac{WHC}{10^4}$$

$$W_{CO} = \frac{M_{CO}}{M_F} \times \frac{G_{FUEL}}{TC} \times WCO$$

$$W_{NO_X} = \frac{M_{NOX}}{M_F} \times \frac{G_{FUEL}}{TC} \times \frac{WNO_X}{10^4} \times K_H$$

Where:

W_{HC} = Mass rate of HC in exhaust, [g/hr]

M_F = Molecular weight of test fuel; see following equation:

$$M_F = 12.01 + 1.008 \times \alpha$$

G_{FUEL} = Fuel mass flow rate, [g/hr]

TC = Total carbon; see following equation:

$$TC = WCO + WCO_2 + \frac{WHC}{10^4}$$

WHC = HC volume concentration in exhaust, ppmC wet

WCO = CO percent concentration in the exhaust, wet

DCO = CO percent concentration in the exhaust, dry

WCO_2 = CO_2 percent concentration in the exhaust, wet

DCO_2 = CO_2 percent concentration in the exhaust, dry

WNO_x = NO volume concentration in exhaust, ppm wet

WH2 = H_2 percent concentration in exhaust, wet

K = correction factor to be used when converting dry measurements to a wet basis. Therefore, wet concentration = dry concentration × K, where K is:

$$K = \frac{1}{1 + 0.005 \times (DCO + DCO_2) \times \alpha - 0.01 \times DH_2}$$

DH_2 = H_2 percent concentration in exhaust, dry, calculated from the following equation:

$$DH_2 = \frac{0.5 \times \alpha \times DCO \times (DCO + DCO_2)}{DCO + (3 \times DCO_2)}$$

W_{CO} = Mass rate of CO in exhaust, [g/hr]

M_{CO} = Molecular weight of CO = 28.01

W_{NOx} = Mass rate of NO_X in exhaust, [g/hr]

M_{NO2} = Molecular weight of NO_2 = 46.01

K_H = Factor for correcting the effects of humidity on NO_2 formation for four-stroke gasoline engines; see the equation below:

$$K_H = \frac{1}{1 - 0.0329 \times (H - 10.71)}$$

Where:

H = specific humidity of the intake air in grams of moisture per kilogram of dry air.

For two-stroke gasoline engines, KH should be set to 1.

(d) The final reported emission test results must be computed by using the following formula for each individual gas component:

$$Y_{wm} = \frac{\Sigma(W_i \times f_i)}{\Sigma(P_i \times f_i)}$$

Where:

Y_{wm} = Weighted mass emission level (HC, CO, NO_x) for a test [g/kW-hr].

W_i = Average mass flow rate (W_{HC}, W_{CO}, W_{NOx}) of an emission from the test engine during mode i, [g/hr].

f_i = Weighting factors for each mode according to § 91.410(a)

P_i = Average power measured during mode i, [kW], calculated according to the formula given in § 91.423(b). Power for the idle mode shall always be zero for this calculation.

(e) The final reported weighted brake-specific fuel consumption (WBSFC) shall be computed by use of the following formula:

$$WBSFC = \frac{\Sigma(F_i \times f_i)}{\Sigma(P_i \times f_i)}$$

Where:

WBSFC = Weighted brake-specific fuel consumption in grams of fuel per kilowatt-hour (g/kW-hr).

F_i = Fuel mass flow rate of the engine during mode i, [g/hr].

f_i = Weighting factors for each mode according to § 91.410(a)

P_i = Average power measured during mode i, [kW], calculated according to the formula given in § 91.423(b). Power for the idle mode shall always be zero for this calculation.

§ 91.420 CVS concept of exhaust gas sampling system.

(a) A dilute exhaust sampling system is designed to directly measure the true mass of emissions in engine exhaust without the necessity of measuring either fuel flow or intake air flow. This is accomplished by diluting the exhaust produced by an engine under test with ambient background air and measuring the total diluted exhaust flow rate and the concentration of emissions within the dilute flow. Total mass flow of an emission is then easily calculated.

(b) A constant volume sampler (CVS) is typically used to control the total amount of dilute flow through the system. As the name implies, a CVS restricts flow to a known value dependent only on the dilute exhaust temperature and pressure.

(c) For the testing described in this subpart, a CVS must consist of: A mixing tunnel into which the engine exhaust and dilutant (background) air are dumped; a dilute exhaust flow metering system; a dilute exhaust sample port; a background sample port; a dilute exhaust sampling system; and a background sampling system.

(1) *Mixing tunnel.* The mixing tunnel must be constructed such that complete mixing of the engine exhaust and background air is assured prior to the sampling probe.

(2) *Exhaust flow metering system.* A dilute exhaust flow metering system must be used to control the total flow rate of the dilute engine exhaust as described in § 91.421.

(3) *Exhaust sample port.* A dilute exhaust sample port must be located in or downstream of the mixing tunnel at a point where complete mixing of the engine exhaust and background air is assured.

(4) *Background sample port.* A dilute background sample port must be located in the stream of background air before it is mixed with the engine exhaust. The

background probe must draw a representative sample of the background air during each sampling mode.

(5) *Exhaust sampling system*. The dilute exhaust sampling system controls the flow of samples from the mixing tunnel to the analyzer system. This could be either a continuous sampling system or grab (bag) sampling system. If a critical flow venturi (CFV) is used on the dilute exhaust sample probe, this system must assure that the sample CFV is in choke flow during testing. If no CFV is used, this system must assure a constant volumetric flow rate through the dilute exhaust sample probe or must incorporate electronic flow compensation.

(6) *Background sampling system*. The background sampling system controls the flow of samples from the background air supply to the analyzer system. This could be either a continuous sampling system or grab (bag) sampling system. This system must assure a constant volumetric flow rate through the background sample probe.

§ 91.421 Dilute gaseous exhaust sampling and analytical system description.

(a) General. The exhaust gas sampling system described in this section is designed to measure the true mass emissions of engine exhaust. This system utilizes the Constant volume Sampling (CVS) concept (described in § 91.420) of measuring mass emissions of HC, NO_x, CO, and CO_2. Grab sampling for individual modes is an acceptable method of dilute testing for all constituents, HC, NO_x, CO, and CO_2. Continuous dilute sampling is not required for any of the exhaust constituents, but is allowable for all. Heated sampling is not required for any of the constituents, but is allowable for HC and NO_x. The mass of gaseous emissions is determined from the sample concentration and total flow over the test period. As an option, the measurement of total fuel mass consumed over a cycle may be substituted for the exhaust measurement of CO_2. General requirements are as follows:

(1) This sampling system requires the use of a Positive Displacement Pump—Constant Volume Sampler (PDP–CVS) system with a heat exchanger, or a Critical Flow Venturi—Constant Volume Sampler (CFV–CVS) system with CVS sample probes and/or a heat exchanger or electronic flow compensation. Figure 2 in appendix B of this subpart is a schematic drawing of the PDP–CVS system. Figure 3 in appendix B of this subpart is a schematic drawing of the CFV–CVS system.

(2) The HC analytical system requires:

(i) Grab sampling (see § 91.420, and Figure 2 or Figure 3 in appendix B of this subpart) and analytical capabilities (see § 91.423, and Figure 4 in appendix B of this subpart), or

(ii) Continuously integrated measurement of diluted HC meeting the minimum requirements and technical specifications contained in paragraph (b)(2) of this section.

(iii) The dilute HC analytical system for marine spark-ignition engines does not require a heated flame ionization detector (HFID).

(iv) If used, the HFID sample must be taken directly from the diluted exhaust stream through a heated probe and integrated continuously over the test cycle.

(v) The heated probe must be located in the sampling system far enough downstream of the mixing area to ensure a uniform sample distribution across the CVS duct at the sampling zone.

(3) The CO and CO_2 analytical system requires:

(i) Grab sampling (see § 91.420, and Figure 2 or Figure 3 in appendix B of this subpart) and analytical capabilities (see § 91.423, and Figure 4 in appendix B of this subpart), or

(ii) Continuously integrated measurement of diluted CO and CO_2 meeting the minimum requirements and technical specifications contained in paragraph (b)(4) of this section.

(4) The NO_X analytical system requires:

(i) Grab sampling (see § 91.420, and Figure 2 or Figure 3 in appendix B of this subpart) and analytical capabilities (see § 91.423, and Figure 4 in appendix B of this subpart), or

(ii) A continuously integrated measurement of diluted NO_X meeting the minimum requirements and technical specifications contained in paragraph (b)(4) of this section.

(5) Since various configurations can produce equivalent results, exact conformance with these drawings is not required. Additional components such as instruments, valves, solenoids, pumps, and switches may be used to provide additional information and coordinate the functions of the component systems. Other components, such as snubbers, which are not needed to maintain accuracy on some systems, may be excluded if their exclusion is based upon good engineering judgment.

(6) Other sampling and/or analytical systems may be used if shown to yield equivalent results and if approved in advance by the Administrator.

(b) Component description. The components necessary for exhaust sampling must meet the following requirements:

(1) *Exhaust dilution system*. The PDP–CVS must conform to all of the requirements listed for the exhaust gas PDP–CVS in § 91.420 of this chapter. The CFV–CVS must conform to all of the requirements listed for the exhaust gas CFV–CVS in § 91.420. In addition, the CVS must conform to the following requirements:

(i) The flow capacity of the CVS must be sufficient to maintain the diluted exhaust stream in the dilution system at a temperature of 190 °C or less at the sampling zone for hydrocarbon measurement and as required to prevent condensation at any point in the dilution system. Gaseous emission samples may be taken directly from this sampling point.

(ii) For the CFV–CVS, either a heat exchanger or electronic flow compensation is required (see Figure 3 in appendix B of this subpart).

(iii) For the CFV–CVS when a heat exchanger is used, the gas mixture temperature, measured at a point immediately ahead of the critical flow venturi, must be within ±11 °C of the average operating temperature observed during the test with the simultaneous requirement that condensation does not occur. The temperature measuring system (sensors and readout) must have an accuracy and precision of ±2 °C. For systems utilizing a flow compensator to maintain proportional flow, the requirement for maintaining constant temperature is not necessary.

(2) *Continuous HC measurement system*. (i) The continuous HC sample system (as shown in Figure 2 or 3 in appendix B of this subpart) uses an ''overflow'' zero and span system. In this type of system, excess zero or span gas spills out of the probe when zero and span checks of the analyzer are made.

(ii) No other analyzers may draw a sample from the continuous HC sample probe, line, or system, unless a common sample pump is used for all analyzers and the sample line system design reflects good engineering practice.

(iii) The overflow gas flow rates into the sample line must be at least 105 percent of the sample system flow rate.

(iv) The overflow gases must enter the sample line as close as practical to the outside surface of the CVS duct or dilution system.

(v) The continuous HC sampling system consists of a probe (which for a HFID analyzer must raise the sample to the specified temperature) and, where used, a sample transfer system (which

for a HFID must maintain the specified temperature). The HFID continuous hydrocarbon sampling system (exclusive of the probe) must:

(A) Maintain a wall temperature of 190° C ± 11° C as measured at every separately controlled heated component (that is, filters, heated line sections), using permanent thermocouples located at each of the separate components.

(B) Have a wall temperature of 190° C ± 11° C over its entire length. The temperature of the system is demonstrated by profiling the thermal characteristics of the system where possible at initial installation and after any major maintenance performed on the system. The profiling is to be accomplished using the insertion thermocouple probing technique. The system temperature must be monitored continuously during testing at the locations and temperature described in § 91.421(b)(2).

(C) Maintain a gas temperature of 190° C ± 11° C immediately before the heated filter and HFID. Determine these gas temperatures by a temperature sensor located immediately upstream of each component.

(vi) The continuous hydrocarbon sampling probe:

(A) Is defined as the first 25.4 to 76.2 cm of the continuous hydrocarbon sampling system.

(B) Has a 0.483 cm minimum inside diameter.

(C) Is installed in the dilution system at a point where the dilution air and exhaust are well mixed and provide a homogenous mixture.

(D) Is sufficiently distant (radially) from other probes and the system wall so as to be free from the influence of any wakes or eddies.

(E) For a continuous HFID sample probe, the probe must increase the gas stream temperature to 190° C ± 11° C at the exit of the probe. Demonstrate the ability of the probe to accomplish this using the insertion thermocouple technique at initial installation and after any major maintenance. Demonstrate compliance with the temperature specification by continuously recording during each test the temperature of either the gas stream or the wall of the sample probe at its terminus.

(vii) The response time of the continuous measurement system must be taken into account when logging test data.

(3) *Sample mixing.* (i) configure the dilution system to ensure a well mixed, homogeneous sample prior to the sampling probe(s).

(ii) Make the temperature of the diluted exhaust stream inside the dilution system sufficient to prevent water condensation.

(iii) Direct the engine exhaust downstream at the point where it is introduced into the dilution system.

(4) *Continuously integrated NO_X, CO, and CO_2* measurement systems. (i) Sample probe requirements:

(A) The sample probe for continuously integrated NO_X, CO, and CO_2 must be in the same plane as the continuous HC probe, but sufficiently distant (radially) from other probes and the tunnel wall so as to be free from the influences of any wakes or eddies.

(B) The sample probe for continuously integrated NO_X, CO, and CO_2 must be heated and insulated over the entire length, to prevent water condensation, to a minimum temperature of 55° C. Sample gas temperature immediately before the first filter in the system must be at least 55° C.

(ii) Conform to the continuous NO_X, CO, or CO_2 sampling and analysis system to the specifications of part 86, subpart D of this chapter with the following exceptions and revisions:

(A) Heat the system components requiring heating only to prevent water condensation, the minimum component temperature is 55° C.

(B) Coordinate analysis system response time with CVS flow fluctuations and sampling time/test cycle offsets, if necessary.

(C) Use only analytical gases conforming to the specifications of § 91.312 for calibration, zero and span checks.

(D) Use a calibration curve conforming to § 91.321 for CO and CO_2 and § 91.318 for NO_X for any range on a linear analyzer below 155 ppm.

(iii) Convert the chart deflections or voltage output of analyzers with non-linear calibration curves to concentration values by the calibration curve(s) specified in § 91.321 before flow correction (if used) and subsequent integration takes place.

§ 91.423 Exhaust gas analytical system; CVS grab sample.

(a) *Schematic drawings.* Figure 4 in appendix B of this subpart is a schematic drawing of the exhaust gas analytical system used for analyzing CVS grab ''bag'' samples from spark-ignition engines. Since various configurations can produce accurate results, exact conformance with the drawing is not required. Additional components such as instruments, valves, solenoids, pumps and switches may be used to provide additional information and coordinate the functions of the component systems. Other components such as snubbers, which are not needed to maintain accuracy in some systems, may be excluded if their exclusion is based on good engineering judgement.

(b) *Major component description.* The analytical system, Figure 4 in Appendix B of this subpart, consists of a flame ionization detector (FID) or a heated flame ionization detector (HFID) for the measurement of hydrocarbons, nondispersive infrared analyzers (NDIR) for the measurement of carbon monoxide and carbon dioxide, and a chemiluminescence detector (CLD) (or heated CLD (HCLD)) for the measurement of oxides of nitrogen. The exhaust gas analytical system shall conform to the following requirements:

(1) The CLD (or HCLD) requires that the nitrogen dioxide present in the sample be converted to nitric oxide before analysis. Other types of analyzers may be used if shown to yield equivalent results and if approved in advance by the Administrator.

(2) If CO instruments are used which are essentially free of CO_2 and water vapor interference, the use of the conditioning column may be deleted. (See §§ 91.317 and 91.320.)

(3) A CO instrument will be considered to be essentially free of CO_2 and water vapor interference if its response to a mixture of three percent CO_2 in N_2, which has been bubbled through water at room temperature, produces an equivalent CO response, as measured on the most sensitive CO range, which is less than one percent of full scale CO concentration on ranges above 300 ppm full scale or less than 3 ppm on ranges below 300 ppm full scale. (See § 91.317.)

(c) *Alternate analytical systems.* Analysis systems meeting the specifications and requirements of this subpart for dilute sampling may be used upon approval of the Administrator.

(d) *Other analyzers and equipment.* Other types of analyzers and equipment may be used if shown to yield equivalent results and if approved in advance by the Administrator.

§ 91.424 Dilute sampling procedure—CVS calibration.

(a) The CVS is calibrated using an accurate flowmeter and restrictor valve. (1) The flowmeter calibration shall be traceable to the National Institute for Standards and Testing (NIST), and will serve as the reference value (NIST ''true'' value) for the CVS calibration.)

(Note: In no case should an upstream screen or other restriction which can affect the flow be used ahead of the flowmeter unless calibrated throughout the flow range with such a device.)

(2) The CVS calibration procedures are designed for use of a ''metering venturi'' type flowmeter. Large radius or American Society of Mechanical Engineers (ASME) flow nozzles are considered equivalent if traceable to NIST measurements. Other measurement systems may be used if shown to be equivalent under the test conditions in this section and traceable to NIST measurements.

(3) Measurements of the various flowmeter parameters are recorded and related to flow through the CVS.

(4) Procedures used by EPA for both PDP–CVS and CFV–CVS are outlined below. Other procedures yielding equivalent results may be used if approved in advance by the Administrator.

(b) After the calibration curve has been obtained, verification of the entire system may be performed by injecting a known mass of gas into the system and comparing the mass indicated by the system to the true mass injected. An indicated error does not necessarily mean that the calibration is wrong, since other factors can influence the accuracy of the system (e.g., analyzer calibration, leaks, or HC hangup). A verification procedure is found in paragraph (e) of this section.

(c) *PDP–CVS calibration.* (1) The following calibration procedure outlines the equipment, the test configuration, and the various parameters which must be measured to establish the flow rate of the CVS pump.

(i) All the parameters related to the pump are simultaneously measured with the parameters related to a flowmeter which is connected in series with the pump.

(ii) The calculated flow rate, in cm^3/s, (at pump inlet absolute pressure and temperature) can then be plotted versus a correlation function which is the value of a specific combination of pump parameters.

(iii) The linear equation which relates the pump flow and the correlation function is then determined.

(iv) In the event that a CVS has a multiple speed drive, a calibration for each range used must be performed.

(2) This calibration procedure is based on the measurement of the absolute values of the pump and flowmeter parameters that relate the flow rate at each point. Two conditions must be maintained to assure the accuracy and integrity of the calibration curve:

(i) The temperature stability must be maintained during calibration. (Flowmeters are sensitive to inlet temperature oscillations; this can cause the data points to be scattered. Gradual changes in temperature are acceptable as long as they occur over a period of several minutes.)

(ii) All connections and ducting between the flowmeter and the CVS pump must be absolutely void of leakage.

(3) During an exhaust emission test the measurement of these same pump parameters enables the user to calculate the flow rate from the calibration equation.

(4) Connect a system as shown in Figure 5 in appendix B of this subpart. Although particular types of equipment are shown, other configurations that yield equivalent results may be used if approved in advance by the Administrator. For the system indicated, the following measurements and accuracies are required:

CALIBRATION DATA MEASUREMENTS

Parameter	Symbol	Units	Sensor-readout tolerances
Barometric pressure (corrected)	P_B	kPa	± 0.34 kPa
Ambient temperature	T_{EI}	°C	± 0.28 °C
Air temperature into metering venturi	T_{EI}	°C	± 1.11 °C
Pressure drop between the inlet and throat of metering venturi	P_{ED}	kPa	± 0.012 kPa
Air flow	Q_S	m^3/min.	± 0.5 percent of NIST value
Air temperature at CVS pump inlet	P_{TI}	°C	± 1.11 °C
Pressure depression at CVS pump inlet	P_{PI}	kPa	± 0.055 kPa
Pressure head at CVS pump outlet	P_{PO}	kPa	± 0.055 kPa
Air temperature at CVS pump outlet (optional)	P_{TO}	°C	1.11 °C
Pump revolutions during test period	N	Revs	± 1 Rev.
Elapsed time for test period	t	s	± 0.5 s.

(5) After the system has been connected as shown in Figure 5 of appendix B of this subpart, set the variable restrictor in the wide open position and run the CVS pump for 20 minutes. Record the calibration data.

(6) Reset the restrictor valve to a more restricted condition in an increment of pump inlet depression that will yield a minimum of six data points for the total calibration. Allow the system to stabilize for 3 minutes and repeat the data acquisition.

(7) Data analysis:

(i) The air flow rate, Q_s, at each test point is calculated in standard cubic feet per minute 20 °C, 101.3 kPa from the flowmeter data using the manufacturer's prescribed method.

(ii) The air flow rate is then converted to pump flow, V_o, in cubic meter per revolution at absolute pump inlet temperature and pressure:

$$V_0 = \frac{Q_s}{n} \times \frac{T_P}{293} \times \frac{101.3\text{kPa}}{P_P}$$

Where:

V_O=Pump flow, m^3/rev at T_P, P_P,

Q_S=Meter air flow rate in standard cubic meters per minute, standard conditions are 20 °C, 101.3 kPa.

n=Pump speed in revolutions per minute.

T_p=Pump inlet temperature in Kelvin,=P_{TI}+273 [°K].

P_P=Absolute pump inlet pressure, kPa.

$=P_P - P_{PI}$

Where:

P_P=barometric pressure, kPa.

P_{PI}=Pump inlet depression, kPa.

(iii) The correlation function at each test point is then calculated from the calibration data:

$$X_o = \frac{1}{n}\sqrt{\left(\frac{\Delta p}{P_e}\right)}$$

Where:

X_O=correlation function.

> p = The pressure differential from pump inlet to pump outlet, kPa.

$=P_E - P_P$.

P_E=Absolute pump outlet pressure, [kPa]

$=P_B+P_{PO}$

Where:

P_{PO}=Pressure head at pump outlet, kPa (inches fluid).

(iv) A linear least squares fit is performed to generate the calibration equation which has the form:

$V_O = D_O - M(X_O)$

D_O and M are the intercept and slope constants, respectively, describing the regression line.

(8) A CVS system that has multiple speeds should be calibrated on each speed used. The calibration curves generated for the ranges will be approximately parallel and the intercept values, DO, will increase as the pump flow range decreases.

(9) If the calibration has been performed carefully, the calculated values from the equation will be within ± 0.50 percent of the measured value of V_O. Values of *M* will vary from one pump to another, but values of D_O for pumps of the same make, model and range should agree within ± three percent of each other. Calibrations should be performed at pump start-up and after major maintenance to assure the stability of the pump slip rate. Analysis of mass injection data will also reflect pump slip stability.

(d) CFV–CVS calibration. (1) Calibration of the CFV is based upon the flow equation for a critical venturi.

(i) Gas flow is a function of inlet pressure and temperature:

$$Q_s = \frac{K_v P}{\sqrt{T_K}}$$

Q_S=flow rate [m³/min.].

K_V=calibration coefficient.

P=absolute pressure [kPa].

T_K=absolute temperature [°K].

(ii) The calibration procedure described in paragraph (d)(3) of this section establishes the value of the calibration coefficient at measured values of pressure, temperature and air flow.

(2) The manufacturer's recommended procedure shall be followed for calibrating electronic portions of the CFV.

(3) Measurements necessary for flow calibration are as follows:

CALIBRATION DATA MEASUREMENTS

Parameter	Symbol	Units	Tolerances
Barometric Pressure (corrected)	P_B	kPa	± 0.34 kPa
Air Temperature into flow meter	T_{EI}	°C	± 0.28 °C
Pressure drop between the inlet and throat of metering venturi	P_{ED}	kPa	± 0.012 kPa
Air flow	Q_S	m³/min.	± 0.5 percent of NIST value
CVS inlet depression	P_{PI}	kPa	± 0.055 kPa
Pressure head at CVS pump outlet	P_{PO}	kPa	± 0.055 kPa
Temperature at venturi inlet	T_V	°C	± 2.22 °C

(4) Set up equipment as shown in Figure 6 in appendix B of this subpart and eliminate leaks. (Leaks between the flow measuring devices and the critical flow venturi will seriously affect the accuracy of the calibration.)

(5) Set the variable flow restrictor to the open position, start the blower, and allow the system to stabilize. Record data from all instruments.

(6) Vary the flow restrictor and make at least eight readings across the critical flow range of the venturi.

(7) Data analysis. The data recorded during the calibration are to be used in the following calculations:

(i) The air flow rate (designated as Q_s) at each test point is calculated in standard cubic feet per minute from the flow meter data using the manufacturer's prescribed method.

(ii) Calculate values of the calibration coefficient for each test point:

$$K_v = \frac{Q_s \sqrt{T_v}}{P_v}$$

Q_S=Flow rate in standard cubic meter per minute, at the standard conditions of 20 °C, 101.3 kPa.

T_V=Temperature at venturi inlet, °K.

P_V=Pressure at venturi inlet, kPA $=P_B - P_{PI}$

Where:

P_{PI} = Venturi inlet pressure depression, kPa.

(iii)Plot K_V as a function of venturi inlet pressure. For choked flow, K_V will have a relatively constant value. As pressure decreases (vacuum increases), the venturi becomes unchoked and K_V decreases. (See Figure 7 in appendix B of this subpart)

(iv) For a minimum of eight points in the critical region calculate an average K_V and the standard deviation.

(v) If the standard deviation exceeds 0.3 percent of the average K_V, take corrective action.

(e) CVS system verification. The following ''gravimetric'' technique can be used to verify that the CVS and analytical instruments can accurately measure a mass of gas that has been injected into the system. (Verification can also be accomplished by constant flow metering using critical flow orifice devices.)

(1) Obtain a small cylinder that has been charged with 99.5 percent or greater propane or carbon monoxide gas (CAUTION—carbon monoxide is poisonous).

(2) Determine a reference cylinder weight to the nearest 0.01 grams.

(3) Operate the CVS in the normal manner and release a quantity of pure propane into the system during the sampling period (approximately five minutes).

(4) The calculations are performed in the normal way except in the case of propane. The density of propane (0.6109 kg/m³carbon atom is used in place of the density of exhaust hydrocarbons.

(5) The gravimetric mass is subtracted from the CVS measured mass and then divided by the gravimetric mass to determine the percent accuracy of the system.

(6) Good engineering practice requires that the cause for any discrepancy greater than ± two percent must be found and corrected.

§ 91.425 CVS calibration frequency.

Calibrate the CVS positive displacement pump or critical flow venturi following initial installation, major maintenance or as necessary when indicated by the CVS system verification (described in § 91.424(e)).

§ 91.426 Dilute emission sampling calculations.

(a) The final reported emission test results must be computed by use of the following formula:

$$A_{wm} = \frac{\Sigma(W_i \times f_i)}{\Sigma(P_i \times f_i)} \times K_{Hi}$$

Where:

A_{wm}=Weighted mass emission level (HC, CO, CO_2, or NO_X) for a test [g/kW–hr].

W_i=Average mass flow rate of an emission from a test engine during mode i [g/hr].

WF_i = Weighting factor for each mode i as defined in § 91.410(a).

P_i = Gross average power generated during mode i [kW] calculated from the following equation (power for the idle mode shall always be zero for this calculation):

$$P_i = \frac{2\Pi}{60{,}000} \times \text{speed} \times \text{torque}$$

speed = average engine speed measured during mode i [rev./minute]
torque = average engine torque measured during mode i [N–m]
K_{Hi} = Humidity correction factor for mode i. This correction factor only affects calculations for NO_X and is equal to one for all other emissions. K_{Hi} is also equal to one for all two-stroke engines.

(b) The mass flow rate (W_i) of an emission for mode i is determined from the following equation:

$$W_i = Q_i \times D \times \left(C_{Di} - C_{Bi} \times \left(1 - \frac{1}{DF_i} \right) \right)$$

Where:
Q_i = Volumetric flow rate of the dilute exhaust through the CVS at standard conditions [m³/hr at STP].
D = Density of a specific emission (D_{HC}, D_{CO}, D_{CO2}, D_{NOx}) in the exhaust [g/m³].
DF_i = Dilution factor of the dilute exhaust during mode i.
C_{Di} = Concentration of the emission (HC, CO, NO_X) in the dilute exhaust extracted from the CVS during mode i [ppm].
C_{Bi} = Concentration of the emission (HC, CO, NO_X) in the background sample during mode i [ppm].
STP = Standard temperature and pressure. All volumetric calculations made for the equations in this section are to be corrected to a standard temperature of 20 °C and 101.3 kPa.

(c) Densities for emissions that are to be measured for this test procedure are:
D_{HC} = 576.8 g/m³
DNO_X = 1912 g/m³
D_{CO} = 1164 g/m³
D_{CO2} = 1829 g/m³

(1) The value of D_{HC} above is calculated based on the assumption that the fuel used has a carbon to hydrogen ratio of 1:1.85. For other fuels, D_{HC} can be calculated from the following formula:

$$D_{HC} = \frac{M_{HC}}{R_{STP}}$$

Where:
M_{HC} = Molecular weight of the hydrocarbon molecule divided by the number of carbon atoms in the molecule [g/mole].
R_{STP} = Ideal gas constant for a gas at STP = 0.024065 [m³-mole].

(2) The idealized molecular weight of the exhaust hydrocarbons, ie., the molecular weight of the hydrocarbon molecule divided by the number of carbon atoms in the molecule, M_{HC} can be calculated from the following formula:

$$M_{HC} = M_C + \alpha M_H + \beta M_O$$

Where:
M_C = Molecular weight of carbon = 12.01 [g/mole].
M_H = Molecular weight of hydrogen = 1.008 [g/mole].
α = Hydrogen to carbon ratio of the test fuel.

(3) The value of D_{NOx} above assumes that NO_X in entirely in the form of NO_2.

(d) The dilution factor (DF) is the ratio of the volumetric flow rate of the background air to that of the raw engine exhaust. The following formula is used to determine DF:

$$DF = \frac{13.4}{C_{D_{HC}} + C_{D_{CO}} + C_{D_{CO_2}}}$$

Where:
$C_{D\ HC}$ = Concentration of HC in the dilute sample [ppm].
$C_{D\ CO}$ = Concentration of CO in the dilute sample [ppm].
$C_{D\ CO2}$ = Concentration of CO_2 in the dilute sample [ppm].

(e) The humidity correction factor K_H is an adjustment made to the measured NO_X. This corrects for the sensitivity that a spark-ignition engine has to the humidity of its combustion air. The following formula is used to determine K_H for NO_X calculations:

$$K_H = \frac{1}{1 - 0.0329(H - 10.71)}$$

Where:
H = Absolute humidity of the engine intake air [grams of water per kilogram of dry air].

(f) The absolute humidity of the engine intake air H is calculated using the following formula:

$$H = \frac{6.211\, P_{dew}}{P_B - \left(\frac{P_{dew}}{100} \right)}$$

Where:
P_{dew} = Saturated vapor pressure at the dew point temperature [kPa].
P_b = Barometric pressure [kPa].

(g) The fuel mass flow rate F_i can be either measured or calculated using the following formula:

$$F_i = \frac{M_f}{T}$$

Where:
M_f = Mass of fuel consumed by the engine during the mode [g].
T = Duration of the sampling period [hr].

(h) The mass of fuel consumed during the mode sampling period, M_{FUEL} can be calculated from the following equation:

$$M_f = \frac{G_S}{R_2 \times 273.15}$$

Where:
G_S = Mass of carbon measured during the mode sampling period [g].
R_2 = The fuel carbon weight fraction, which is the mass of carbon in fuel per mass of fuel [g/g].

(i) The grams of carbon measured during the mode G_S can be calculated from the following equation:

$$G_S = \frac{12.011 \times HC_{mass}}{12.011 + 1.008\alpha} + 0.429 CO_{mass} + 0.273 CO_{2\,mass}$$

Where:
HC_{mass} = mass of hydrocarbon emissions for the mode sampling period [g].
CO_{mass} = mass of carbon monoxide emissions for the mode sampling period [g].
$CO_{2\ mass}$ = mass of carbon dioxide emissions for the mode sampling period [g].
α = The atomic hydrogen to carbon ratio of the fuel.

§ 91.427 Catalyst thermal stress resistance evaluation.

(a)(1) The purpose of the evaluation procedure specified in this section is to determine the effect of thermal stress on catalyst conversion efficiency. The thermal stress is imposed on the test catalyst by exposing it to quiescent heated air in an oven. The evaluation of the effect of such stress on catalyst performance is based on the resultant degradation of the efficiency with which the conversions of specific pollutants are promoted. The application of this evaluation procedure involves the several steps that are described in the following paragraphs.

(2) The engine manufacturer need not submit catalyst conversion efficiency data for pollutants that the catalyst being tested was not designed to reduce/oxidize. The engine manufacturer must specify the pollutants that the catalyst will be converting and submit catalyst conversion efficiency data on only those pollutants.

(b) Determination of initial conversion efficiency.

(1) A synthetic exhaust gas mixture having the composition specified in § 91.329 is heated to a temperature of 450 °C ± 5 °C and passed through the new test catalyst or, optionally, a test catalyst that has been exposed to temperatures less than or equal to 500 °C for less than or equal to two hours, under flow conditions that are representative of anticipated in-use conditions.

(2) The concentration of each pollutant of interest, that is, hydrocarbons, carbon monoxide, or oxides of nitrogen, in the effluent of the catalyst is determined by means of the instrumentation that is specified for exhaust gas analysis in subpart D of this part.

(3) The conversion efficiency for each pollutant is determined by:

(i) Subtracting the effluent concentration from the initial concentration,

(ii) Dividing this result by the initial concentration,

(iii) Multiplying this result by 100 percent.

(c) Imposition of thermal stress.

(1) The catalyst is placed in an oven that has been pre-heated to 1000 °C and the temperature of the air in the oven is maintained at 1000 °C ± 10 °C for six hours. Optionally, the catalyst may instead be placed in an oven having a 90% nitrogen/10% water vapor environment that has been pre-heated to at least 850 °C and the temperature of the nitrogen/water vapor environment in the oven is maintained at 850 °C ± 10 °C for six hours.

(2) The catalyst is removed from the oven and allowed to cool to room temperature.

(d) Determination of final conversion efficiency. The steps listen in paragraph (b) of this section are repeated.

(e) Determination of conversion efficiency degradation.

(1) The final conversion efficiency determined in paragraph (c) of this section is subtracted from the initial conversion efficiency determined in paragraph (b) of this section.

(2) This result is divided by the initial conversion efficiency.

(3) This result is multiplied by 100 percent.

(f) Determination of compliance with degradation limit. The percent degradation determined in paragraph (e) of this section must not be greater than 20 percent.

Appendix A to Subpart E of Part 91—Tables

TABLE 1—PARAMETERS TO BE MEASURED OR CALCULATED AND RECORDED.

Parameter	Units
Airflow rate (dry), if applicable	g/h

TABLE 1—PARAMETERS TO BE MEASURED OR CALCULATED AND RECORDED.—Continued

Parameter	Units
Fuel flow rate	g/h
Engine speed	rpm
Engine torque output	N•m
Power output	kW
Air inlet temperature	°C
Air humidity	mg/kg
Coolant temperature (liquid cooled)	°C
Exhaust mixing chamber surface temperature, if applicable.	°C
Exhaust sample line temperature, if applicable.	°C
Total accumulated hours of engine operation.	h
Barometric pressure	kPa

TABLE 2.—TEST CYCLE AND WEIGHTING FACTORS FOR MARINE ENGINES

Mode No.	Engine speed as a percentage of engine rated speed	Engine torque as a percentage of maximum torque at rated speed	Mode weighting factor
1	100	100	0.06
2	80	71.6	0.14
3	60	46.5	0.15
4	40	25	0.25
5	idle	0	0.40

BILLING CODE 6560–50–P

Appendix B to Subpart E of Part 91—Figures

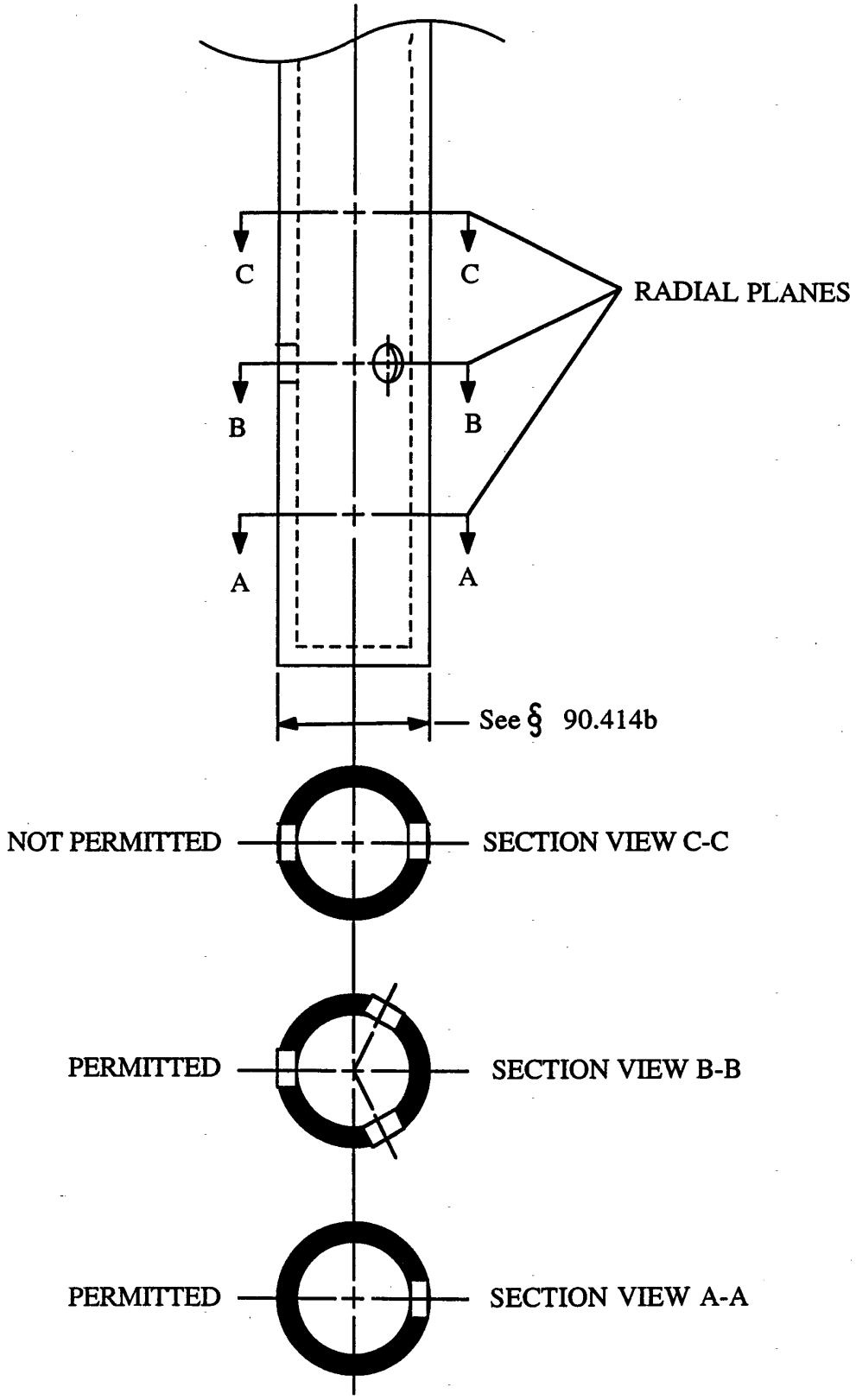

Figure 1.—Sample Probe and Typical Hole Spacings

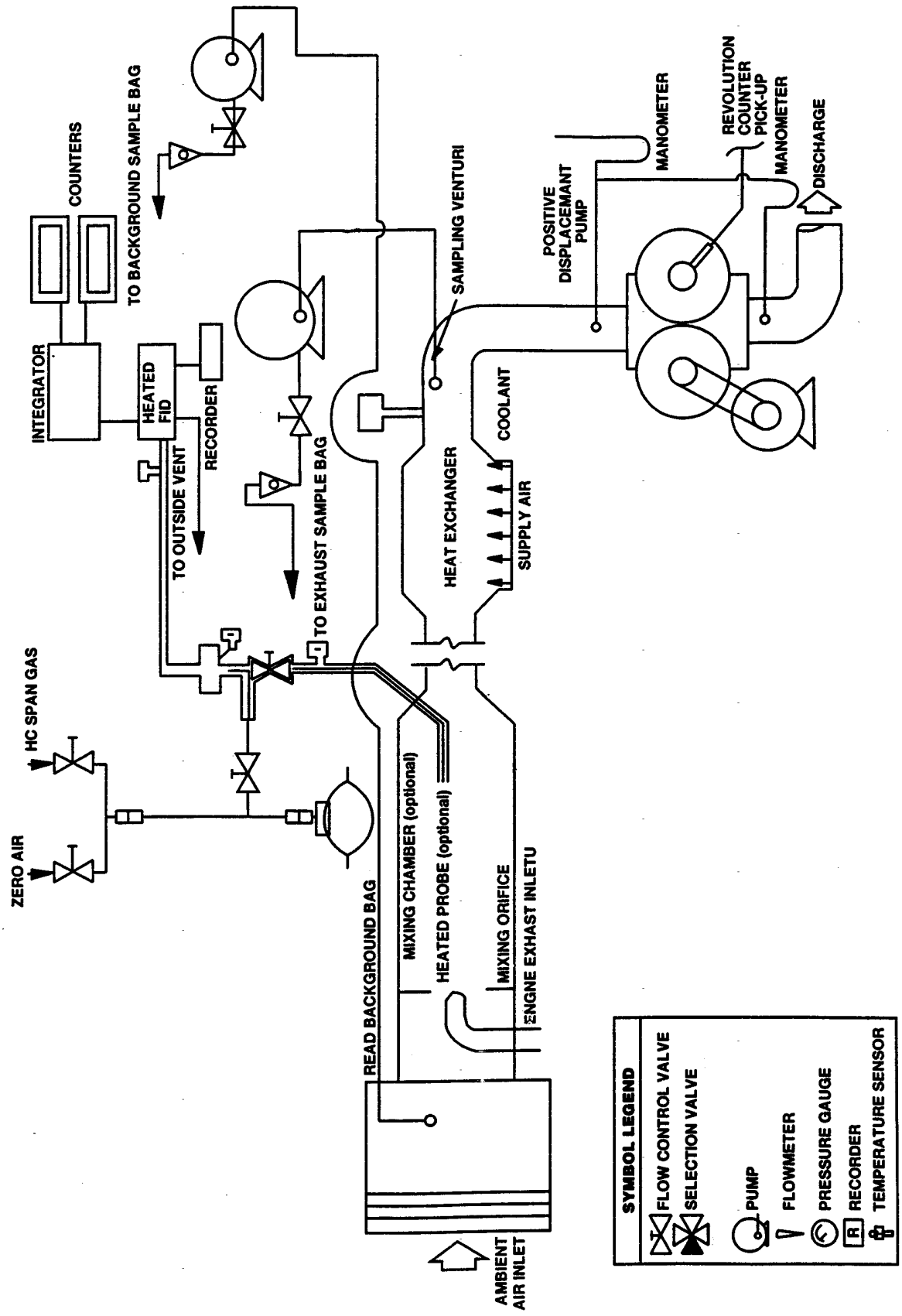

Figure 2 — Gaseous Emissions Sampling System (PDP-CVS) Showing both grab bag sampling and continous sampling

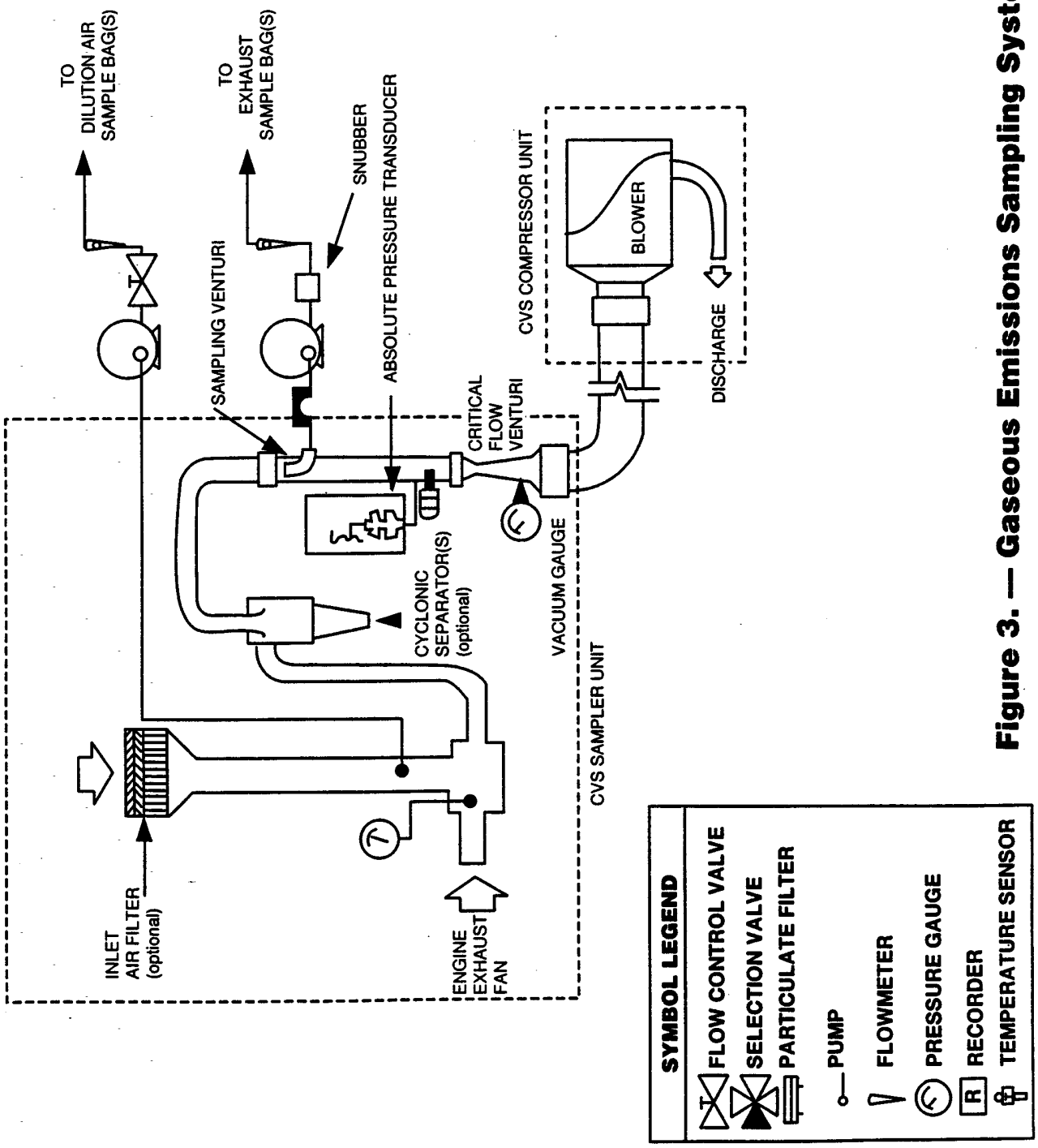

Figure 3. — Gaseous Emissions Sampling System (CVF-CVS)

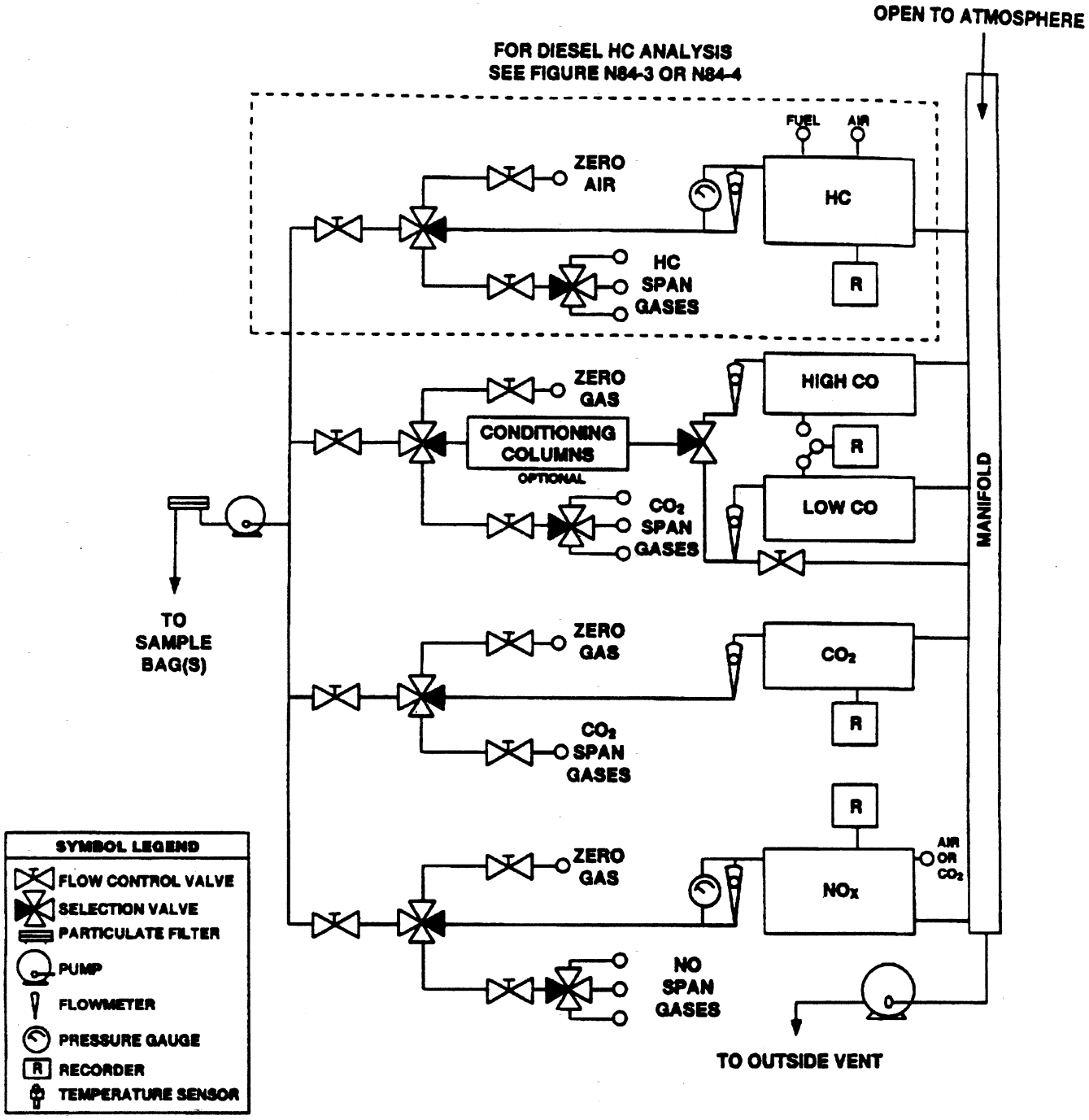

Figure 4. — Exhaust Gas Analytical System

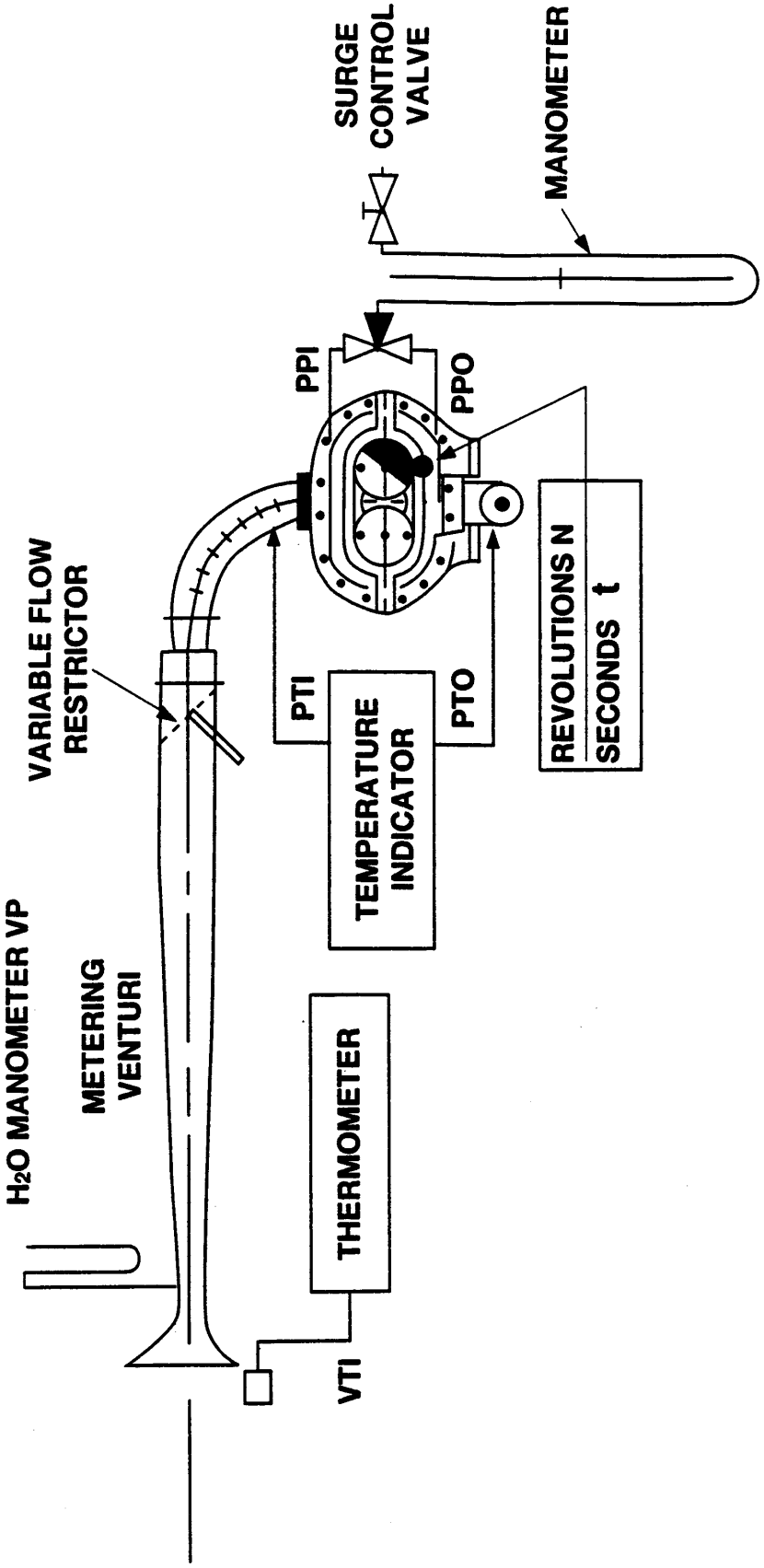

Figure 5. — PDP-CVS Calibration Configuration

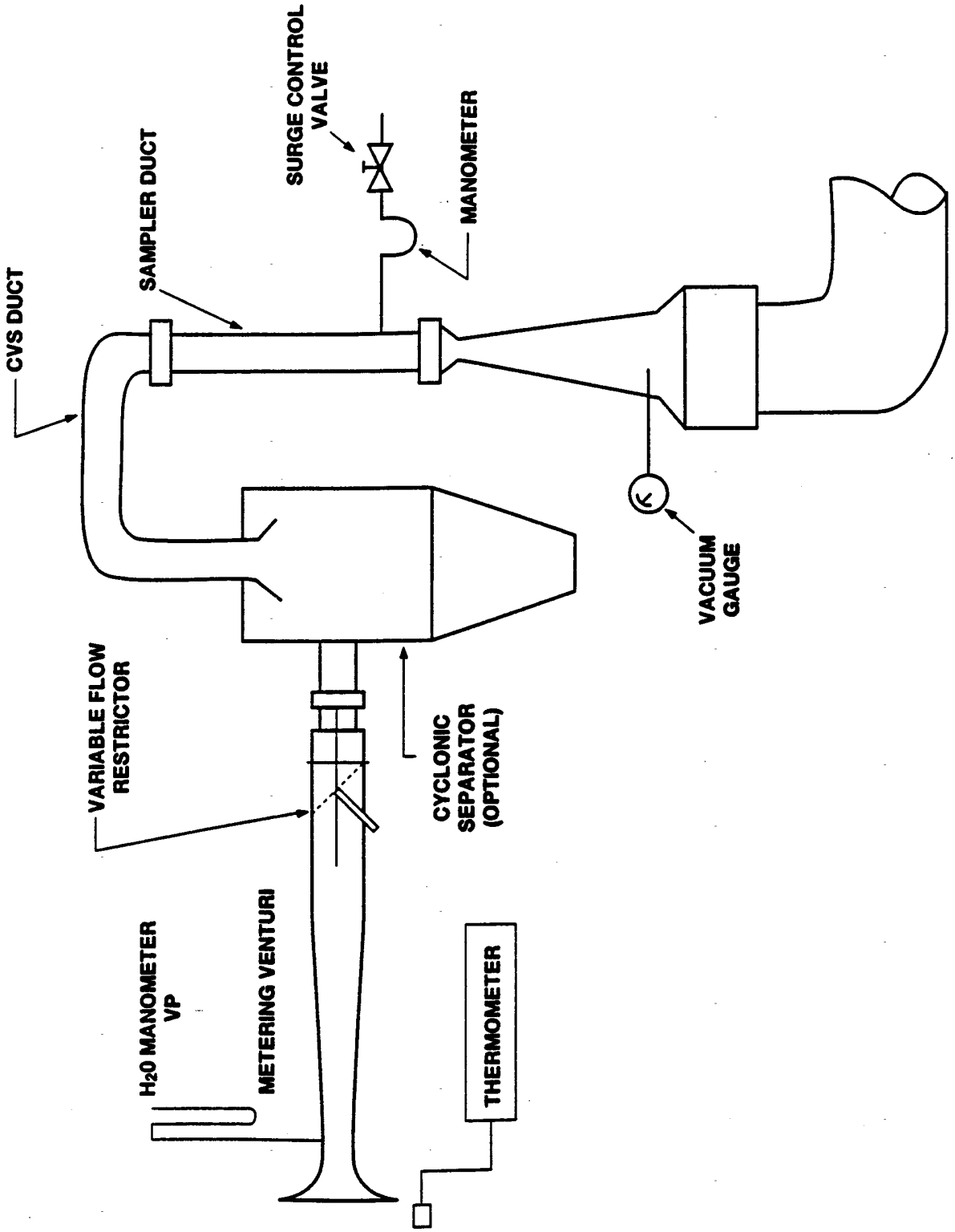

Figure 6. — CFV-CVS Calibration Configuration

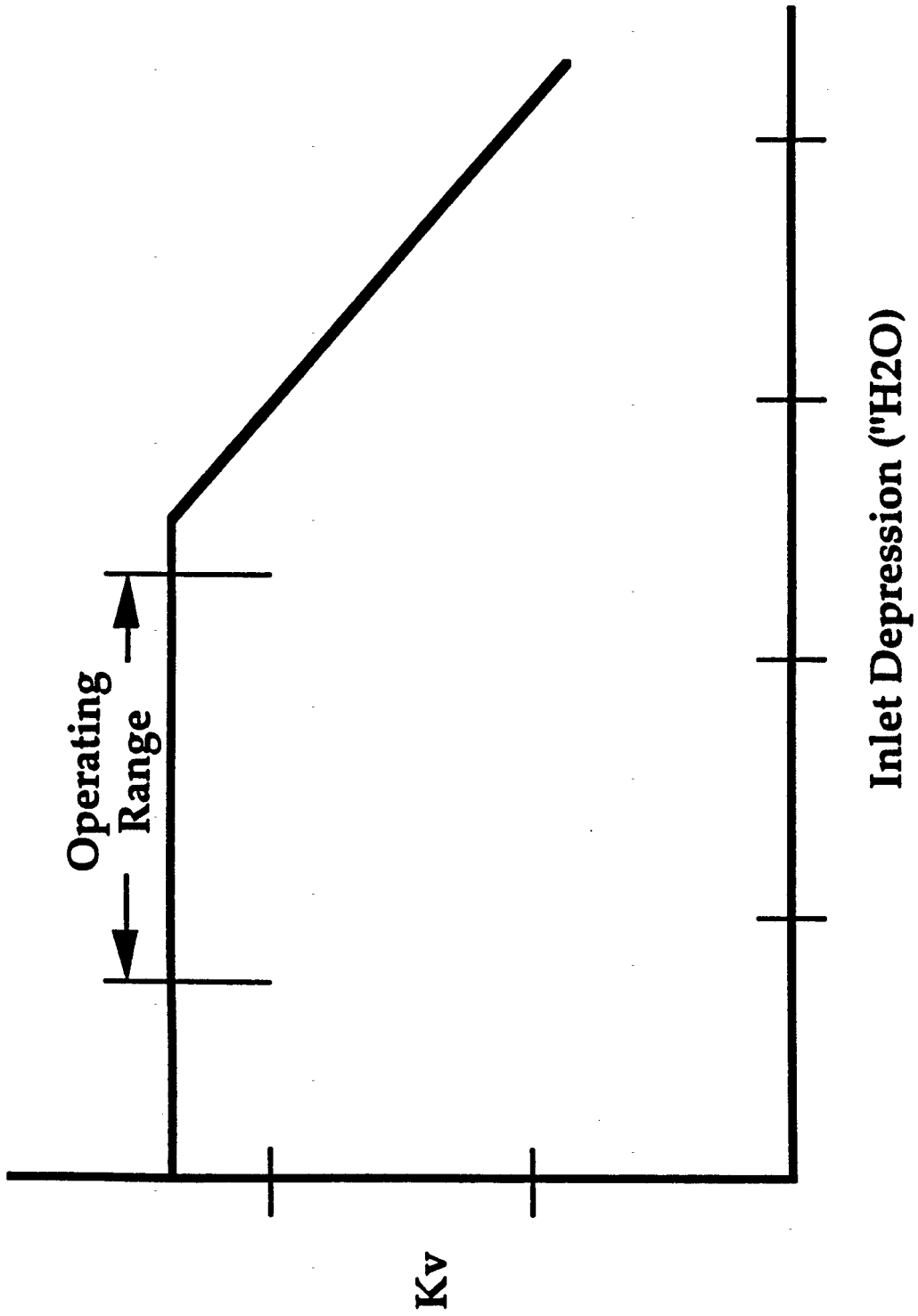

Figure 7.—Sonic Flow Choking

BILLING CODE 6560–50–P

Subpart F—Manufacturer Production Line Testing Program

§ 91.501 Applicability.

(a) The requirements of this subpart F are applicable to all marine spark-ignition engines subject to the provisions of subpart A of this part 91.

(b) The Administrator may waive the provisions of this subpart for a manufacturer or a specific engine family, as specified in paragraphs (b)(1), (2) and (3) of this section.

(1) The provisions of this subpart are waived for existing technology OB/PWC through model year 2003.

(2) Upon request by a manufacturer, the Administrator may waive the provisions of this subpart for existing technology OB/PWC for a specific engine family through model year 2005 if the Administrator determines that the engine family will be phased out of production for sale in the U.S. by the end of model year 2005. As a condition to receiving such a waiver for either model year 2004, 2005 or both, the manufacturer must discontinue production of engines for sale in the U.S. according to a schedule determined by the Administrator upon granting this waiver. Failure to do so by the manufacturer will void *ab initio* the applicable certificate of conformity.

(3) A manufacturer request under paragraph (b)(2) of this section must be in writing and apply to a specific engine family. The request must identify the engine family designation, a written rationale supporting the FEL choice, the type of information used as a basis for the FEL (e.g., previous emission tests, development tests), the specific source of the information including when the information was generated, the requested schedule for phasing the engine family out of production, and any other information the Administrator may require.

§ 91.502 Definitions.

The definitions in subpart A of this part apply to this subpart. The following definitions also apply to this subpart.

Configuration means any subclassification of an engine family which can be described on the basis of gross power, emission control system, governed speed, injector size, engine calibration, and other parameters as designated by the Administrator.

Test sample means the collection of engines selected from the population of an engine family for emission testing.

§ 91.503 Production Line Testing by the Manufacturer.

(a) Manufacturers of marine SI engines shall test production line engines from each engine family according to the provisions of this subpart.

(b) Production line engines must be tested using the test procedure specified in subpart E of this part that was used in certification unless an alternate procedure is approved by the Administrator. Any adjustable engine parameter must be set to values or positions that are within the range recommended to the ultimate purchaser, unless otherwise specified by the Administrator. The Administrator may specify values within or without the range recommended to the ultimate purchaser.

§ 91.504 Maintenance of records; submittal of information.

(a) The manufacturer of any new marine SI engine subject to any of the provisions of this subpart must establish, maintain, and retain the following adequately organized and indexed records:

(1) *General records.* A description of all equipment used to test engines in accordance with § 91.503. Subpart D of this part sets forth relevant equipment requirements in §§ 91.306, 91.308, 91.309, and 91.313.

(2) *Individual records.* These records pertain to each production line test conducted pursuant to this subpart and include:

(i) The date, time, and location of each test;

(ii) The number of hours of service accumulated on the test engine when the test began and ended;

(iii) The names of all supervisory personnel involved in the conduct of the production line test;

(iv) A record and description of any adjustment, repair, preparation or modification performed prior to and/or subsequent to approval by the Administrator pursuant to § 91.507(b)(1), giving the date, associated time, justification, name(s) of the authorizing personnel, and names of all supervisory personnel responsible for the conduct of the repair;

(v) If applicable, the date the engine was shipped from the assembly plant, associated storage facility or port facility, and the date the engine was received at the testing facility;

(vi) A complete record of all emission tests performed pursuant to this subpart (except tests performed directly by EPA), including all individual worksheets and/or other documentation relating to each test, or exact copies thereof, in accordance with the record requirements specified in § 91.405.

(vii) A brief description of any significant events during testing not otherwise described under paragraph (a)(2) of this section, commencing with the test engine selection process and including such extraordinary events as engine damage during shipment.

(3) The manufacturer must establish, maintain and retain general records, pursuant to paragraph (a)(1) of this section, for each test cell that can be used to perform emission testing under this subpart.

(b) The manufacturer must retain all records required to be maintained under this subpart for a period of one year after completion of all testing required for the engine family in a model year. Records may be retained as hard copy (i.e., on paper) or reduced to microfilm, floppy disk, or some other method of data storage, depending upon the manufacturer's record retention procedure; provided, that in every case, all the information contained in the hard copy is retained.

(c) The manufacturer must, upon request by the Administrator, submit the following information with regard to engine production:

(1) Projected production or actual production for each engine configuration within each engine family for which certification has been requested and/or approved,

(2) Number of engines, by configuration and assembly plant, scheduled for production or actually produced.

(d) Nothing in this section limits the Administrator's discretion to require a manufacturer to establish, maintain, retain or submit to EPA information not specified by this section.

(e) All reports, submissions, notifications, and requests for approval made under this subpart must be addressed to: Manager, Engine Compliance Programs Group 6403J, U.S. Environmental Protection Agency, 401 M Street SW, Washington, DC 20460.

(f) The manufacturer must electronically submit the results of its production line testing using an EPA information format. The Administrator may exempt manufacturers from this requirement upon written request with supporting justification.

§ 91.505 Right of entry and access.

(a) To allow the Administrator to determine whether a manufacturer is complying with the provisions of this or other subparts of this part, one or more EPA enforcement officers may enter during operating hours and upon presentation of credentials any of the following places:

(1) Any facility, including ports of entry, where any engine to be introduced into commerce or any

emission-related component is manufactured, assembled, or stored;

(2) Any facility where any test conducted pursuant to this or any other subpart or any procedure or activity connected with such test is or was performed;

(3) Any facility where any test engine is present; and

(4) Any facility where any record required under § 91.504 or other document relating to this subpart or any other subpart of this part is located.

(b) Upon admission to any facility referred to in paragraph (a) of this section, EPA enforcement officers are authorized to perform the following inspection-related activities:

(1) To inspect and monitor any aspect of engine manufacture, assembly, storage, testing and other procedures, and to inspect and monitor the facilities in which these procedures are conducted;

(2) To inspect and monitor any aspect of engine test procedures or activities, including test engine selection, preparation and service accumulation, emission test cycles, and maintenance and verification of test equipment calibration;

(3) To inspect and make copies of any records or documents related to the assembly, storage, selection, and testing of an engine; and

(4) To inspect and photograph any part or aspect of any engine and any component used in the assembly thereof that is reasonably related to the purpose of the entry.

(c) EPA enforcement officers are authorized to obtain reasonable assistance without cost from those in charge of a facility to help the officers perform any function listed in this subpart and they are authorized to request the manufacturer to make arrangements with those in charge of a facility operated for the manufacturer's benefit to furnish reasonable assistance without cost to EPA.

(1) Reasonable assistance includes, but is not limited to, clerical, copying, interpretation and translation services; the making available on an EPA enforcement officer's request of personnel of the facility being inspected during their working hours to inform the EPA enforcement officer of how the facility operates and to answer the officer's questions; and the performance on request of emission tests on any engine which is being, has been, or will be used for production line or other testing.

(2) By written request, signed by the Assistant Administrator for Air and Radiation, and served on the manufacturer, a manufacturer may be compelled to cause the personal appearance of any employee at such a facility before an EPA enforcement officer. Any such employee who has been instructed by the manufacturer to appear will be entitled to be accompanied, represented, and advised by counsel.

(d) EPA enforcement officers are authorized to seek a warrant or court order authorizing the EPA enforcement officers to conduct the activities authorized in this section, as appropriate, to execute the functions specified in this section. EPA enforcement officers may proceed *ex parte* to obtain a warrant or court order whether or not the EPA enforcement officers first attempted to seek permission from the manufacturer or the party in charge of the facility(ies) in question to conduct the activities authorized in this section.

(e) A manufacturer must permit an EPA enforcement officer(s) who presents a warrant or court order to conduct the activities authorized in this section as described in the warrant or court order. The manufacturer must also cause those in charge of its facility or a facility operated for its benefit to permit entry and access as authorized in this section pursuant to a warrant or court order whether or not the manufacturer controls the facility. In the absence of a warrant or court order, an EPA enforcement officer(s) may conduct the activities authorized in this section only upon the consent of the manufacturer or the party in charge of the facility(ies) in question.

(f) It is not a violation of this part or the Clean Air Act for any person to refuse to permit an EPA enforcement officer(s) to conduct the activities authorized in this section if the officer(s) appears without a warrant or court order.

(g) A manufacturer is responsible for locating its foreign testing and manufacturing facilities in jurisdictions where local law does not prohibit an EPA enforcement officer(s) from conducting the entry and access activities specified in this section. EPA will not attempt to make any inspections which it has been informed local foreign law prohibits.

§ 91.506 Engine sample selection.

(a) At the start of each model year, the marine SI engine manufacturer will begin to randomly select engines from each engine family for production line testing at a rate of one percent. Each engine will be selected from the end of the assembly line.

(1) *For newly certified engine families:* After two engines are tested, the manufacturer will calculate the required sample size for the model year according to the Sample Size Equation in paragraph (b) of this section.

(2) *For carry-over engine families:* After one engine is tested, the manufacturer will combine the test with the last test result from the previous model year and then calculate the required sample size for the model year according to the Sample Size Equation in paragraph (b) of this section.

(b)(1) Manufacturers will calculate the required sample size for the model year for each engine family using the Sample Size Equation below. N is calculated from each test result. The number N indicates the number of tests required for the model year for an engine family. N, is recalculated after each test. Test results used to calculate the variables in the Sample Size Equation must be final deteriorated test results as specified in § 91.509(c).

$$N = \left[\frac{(t_{95} * \sigma)}{(x - FEL)}\right]^2 + 1$$

where:

N=required sample size for the model year.

t_{95}=95% confidence coefficient. It is dependent on the actual number of tests completed, n, as specified in the table in paragraph (b)(2) of this section. It defines one-tail, 95% confidence intervals.

σ=actual test sample standard deviation calculated from the following equation:

$$\sigma = \sqrt{\frac{\Sigma(X_i - x)^2}{n - 1}}$$

x_i=emission test result for an individual engine

x=mean of emission test results of the actual sample

FEL=Family Emission Limit

n=The actual number of tests completed in an engine family

(2) Actual Number of Tests (n) & 1-tail Confidence Coefficients (t_{95})

n	t_{95}	n	t_{95}	n	t_{95}
2	6.31	12	1.80	22	1.72
3	2.92	13	1.78	23	1.72
4	2.35	14	1.77	24	1.71
5	2.13	15	1.76	25	1.71
6	2.02	16	1.75	26	1.71
7	1.94	17	1.75	27	1.71
8	1.90	18	1.74	28	1.70
9	1.86	19	1.73	29	1.70
10	1.83	20	1.73	30	1.70
11	1.81	21	1.72	∞	1.645

(3) A manufacturer must distribute the testing of the remaining number of

engines needed to meet the required sample size N, evenly throughout the remainder of the model year.

(4) After each new test, the required sample size, N, is recalculated using updated sample means, sample standard deviations and the appropriate 95% confidence coefficient.

(5) A manufacturer must continue testing and updating each engine family's sample size calculations according to paragraphs (b)(1) through (b)(4) of this section until a decision is made to stop testing as described in paragraph (b)(6) of this section or a noncompliance decision is made pursuant to § 91.510(b).

(6) If, at any time throughout the model year, the calculated required sample size, N, for an engine family is less than or equal to the actual sample size, n, and the sample mean, x, for $HC+NO_X$ is less than or equal to the FEL, the manufacturer may stop testing that engine family.

(7) If, at any time throughout the model year, the sample mean, x, for $HC+NO_X$ is greater than the FEL, the manufacturer must continue testing that engine family at the appropriate maximum sampling rate.

(8) The maximum required sample size for an engine family (regardless of the required sample size, N, as calculated in paragraph (b)(1) of this section) is the lesser of thirty tests per model year or one percent of projected annual production for that engine family for that model year.

(9) Manufacturers may elect to test additional randomly chosen engines. All additional randomly chosen engines tested in accordance with the testing procedures specified in § 91.507 must be included in the Sample Size and Cumulative Sum equation calculations as defined in paragraph (b)(1) of this section and § 91.508(a), respectively.

(c) The manufacturer must produce and assemble the test engines using its normal production and assembly process for engines to be distributed into commerce.

(d) No quality control, testing, or assembly procedures will be used on any test engine or any portion thereof, including parts and subassemblies, that have not been or will not be used during the production and assembly of all other engines of that family, unless the Administrator approves the modification in production or assembly procedures.

§ 91.507 Test procedures.

(a)(1) For marine SI engines subject to the provisions of this subpart, the prescribed test procedures are specified in subpart E of this part.

(2) The Administrator may, on the basis of a written application by a manufacturer, prescribe test procedures other than those specified in paragraph (a)(1) of this section for any marine engine he or she determines is not susceptible to satisfactory testing using procedures specified in paragraph (a)(1) of this section.

(b)(1) The manufacturer may not adjust, repair, prepare, or modify any test engine and may not perform any emission test on any test engine unless this adjustment, repair, preparation, modification and/or test is documented in the manufacturer's engine assembly and inspection procedures and is actually performed by the manufacturer or unless this adjustment, repair, preparation, modification and/or test is required or permitted under this subpart or is approved in advance by the Administrator.

(2) The Administrator may adjust or require to be adjusted any engine parameter which the Administrator has determined to be subject to adjustment for certification, production line testing and Selective Enforcement Audit testing, to any setting within the physically adjustable range of that parameter, as determined by the Administrator, prior to the performance of any test. However, if the idle speed parameter is one which the Administrator has determined to be subject to adjustment, the Administrator may not adjust it or require that it be adjusted to any setting which causes a lower engine idle speed than would have been possible within the physically adjustable range of the idle speed parameter if the manufacturer had accumulated 12 hours of service on the engine under paragraph (c) of this section, all other parameters being identically adjusted for the purpose of the comparison. The manufacturer may be requested to supply information necessary to establish an alternate minimum idle speed. The Administrator, in making or specifying these adjustments, may consider the effect of the deviation from the manufacturer's recommended setting on emission performance characteristics as well as the likelihood that similar settings will occur on in-use engines. In determining likelihood, the Administrator may consider factors such as, but not limited to, the effect of the adjustment on engine performance characteristics and information from similar in-use engines.

(c) Service Accumulation. (1) Prior to performing exhaust emission production line testing, the manufacturer may accumulate on each test engine a number of hours of service equal to the greater of 12 hours or the number of hours the manufacturer accumulated during certification on the emission data engine for each engine family.

(2) Service accumulation must be performed in a manner using good engineering judgment to obtain emission results representative of production line engines.

(d) The manufacturer may not perform any maintenance on test engines after selection for testing.

(e) If an engine is shipped to a remote facility for production line testing, and an adjustment or repair is necessary because of shipment, the engine manufacturer must perform the necessary adjustment or repair only after the initial test of the engine, except in cases where the Administrator has determined that the test would be impossible or unsafe to perform or would permanently damage the engine. Engine manufacturers must report to the Administrator, in the quarterly report required by § 91.509(e), all adjustments or repairs performed on test engines prior to each test.

(f) If an engine cannot complete the service accumulation or an emission test because of a malfunction, the manufacturer may request that the Administrator authorize either the repair of that engine or its deletion from the test sequence.

(g) Testing. A manufacturer must test engines with the test procedure specified in subpart E of this part to demonstrate compliance with the applicable FEL. If alternate procedures were used in certification, then those alternate procedures must be used in production line testing.

(h) Retesting. (1) If an engine manufacturer reasonably determines that an emission test of an engine is invalid, the engine may be retested. Emission results from all tests must be reported to EPA. The engine manufacturer must also include a detailed explanation of the reasons for invalidating any test in the quarterly report required in § 91.509(e). In the event a retest is performed, a request may be made to the Administrator, within ten days of the end of the production quarter, for permission to substitute the after-repair test results for the original test results. The Administrator will either affirm or deny the request by the engine manufacturer within ten working days from receipt of the request.

§ 91.508 Cumulative Sum (CumSum) Procedure

(a) Manufacturers must construct the following CumSum Equation for

$HC+NO_X$ for each engine family. Test results used to calculate the variables in the CumSum Equation must be final deteriorated test results as defined in § 91.509(c).

$C_i = \max[0\ 0R\ (C_{i-1} + X_i - (FEL + F))]$

Where:

C_i = The current CumSum statistic

C_{i-1} = The previous CumSum statistic. Prior to any testing, the CumSum statistic = 0 (i.e. $C_0 = 0$)

X_i = The current emission test result for an individual engine

FEL = Family Emission Limit

$F = 0.25 \times \sigma$

After each test, C_i is compared to the action limit, H, the quantity which the CumSum statistic must exceed, in two consecutive tests, before the engine family may be determined to be in noncompliance for purposes of § 91.510.

H = The Action Limit. It is $5.0 \times \sigma$, and is a function of the standard deviation, σ.

σ = is the sample standard deviation and is recalculated after each test.

(b) After each engine is tested, the CumSum statistic shall be promptly updated according to the CumSum Equation in paragraph (a) of this section.

(c)(1) If, at any time during the model year, a manufacturer amends the application for certification for an engine family as specified in paragraph (a) of § 91.122 by performing an engine family modification (i.e. a change such as a running change involving a physical modification to an engine, a change in specification or setting, the addition of a new configuration, or the use of a different deterioration factor) with no changes to the FEL, all previous sample size and CumSum statistic calculations for the model year will remain unchanged.

(2) If, at any time during the model year, a manufacturer amends the application for certification for an engine family as specified in paragraph (a) of § 91.122 by modifying its FEL as a result of an engine family modification, the manufacturer must continue its calculations by inserting the new FEL into the sample size equation as specified in § 91.506(b)(1) and into the CumSum equation in paragraph (a) of this section. All previous calculations remain unchanged. If the sample size calculation indicates that additional tests are required, then those tests must be performed. The CumSum statistic recalculation must not indicate that the family has exceeded the action limit for two consecutive tests. The manufacturer's final credit report as required by § 91.210 must break out the credits that result from each FEL and corresponding CumSum analysis for each FEL set.

(3) If, at any time during the model year, a manufacturer amends the application for certification for an engine family as specified in paragraph (a) of § 91.122 by modifying its FEL without performing an engine modification, all previous sample size and CumSum statistic calculations for the model year must be recalculated using the new FEL. If the sample size calculation indicates that additional tests are required, then those tests must be performed. The CumSum statistic recalculation must not indicate that the family has exceeded the action limit for two consecutive tests.

(4) If, at any time after the end of the model year but prior to the manufacturer's final credit report submittal as specified in § 91.210, a manufacturer changes an FEL for an entire family, or for an affected part of the year's production, as specified in paragraph (a) of § 91.122, in cases where there were one or more mid-year engine family modifications, all previous sample size and CumSum statistic calculations for the model year, or part of the model year affected by an engine family change, must be recalculated using the new FEL. The sample size equation must not indicate a larger number of tests than were appropriately performed using the previous FEL and the CumSum statistic recalculation must not exceed the action limit in two consecutive tests. The manufacturer's final credit report as required by § 91.210 must break out the credits that result from each FEL and corresponding CumSum analysis for each FEL set.

§ 91.509 Calculation and reporting of test results.

(a) Initial test results are calculated following the applicable test procedure specified in paragraph (a) of § 91.507. The manufacturer rounds these results, in accordance with ASTM E29–93a, to the number of decimal places contained in the applicable emission standard expressed to one additional significant figure. (ASTM E29–93a has been incorporated by reference. See § 91.6.)

(b) Final test results are calculated by summing the initial test results derived in paragraph (a) of this section for each test engine, dividing by the number of tests conducted on the engine, and rounding in accordance with ASTM E29–93a to the same number of decimal places contained in the applicable standard expressed to one additional significant figure.

(c) The final deteriorated test results for each test engine are calculated by applying the appropriate deterioration factors, derived in the certification process for the engine family, to the final test results, and rounding in accordance with ASTM E29–93a to the same number of decimal places contained in the applicable standard expressed to one additional significant figure.

(d) If, at any time during the model year, the CumSum statistic exceeds the applicable action limit, H, in two consecutive tests, the engine family may be determined to be in noncompliance and the manufacturer must notify EPA within two working days of such exceedance by the CumSum statistic.

(e) Within 30 calendar days of the end of each quarter, each engine manufacturer must submit to the Administrator a report which includes the following information:

(1) The location and description of the manufacturer's or other's exhaust emission test facilities which were utilized to conduct testing reported pursuant to this section;

(2) Total production and sample sizes, N and n, for each engine family;

(3) The FEL against which each engine family was tested;

(4) A description of the process to obtain engines on a random basis;

(5) A description of the test engines;

(6) For each test conducted,

(i) A description of the test engine, including:

(A) Configuration and engine family identification,

(B) Year, make, and build date,

(C) Engine identification number, and

(D) Number of hours of service accumulated on engine prior to testing;

(ii) Location where service accumulation was conducted and description of accumulation procedure and schedule;

(iii) Test number, date, test procedure used, initial test results before and after rounding, and final test results for all exhaust emission tests, whether valid or invalid, and the reason for invalidation, if applicable;

(iv) A complete description of any adjustment, modification, repair, preparation, maintenance, and/or testing which was performed on the test engine, was not reported pursuant to any other paragraph of this subpart, and will not be performed on all other production engines;

(v) A CumSum analysis, as required in § 91.508, of the production line test results for each engine family;

(vi) Any other information the Administrator may request relevant to the determination whether the new engines being manufactured by the manufacturer do in fact conform with the regulations with respect to which the certificate of conformity was issued;

(7) For each failed engine as defined in § 91.510(a), a description of the remedy and test results for all retests as required by § 91.511(g);

(8) The date of the end of the engine manufacturer's model year production for each engine family; and

(9) The following signed statement and endorsement by an authorized representative of the manufacturer:

This report is submitted pursuant to sections 213 and 208 of the Clean Air Act. This production line testing program was conducted in complete conformance with all applicable regulations under 40 CFR part 91 *et seq.* No emission-related changes to production processes or quality control procedures for the engine family tested have been made during this production line testing program that affect engines from the production line. All data and information reported herein is, to the best of (Company Name) knowledge, true and accurate. I am aware of the penalties associated with violations of the Clean Air Act and the regulations thereunder. (Authorized Company Representative.)

§ 91.510 Compliance with criteria for production line testing.

(a) A failed engine is one whose final deteriorated test results pursuant to § 91.509(c), for HC + NO_X exceeds the applicable Family Emission Limit (FEL).

(b) An engine family may be determined to be in noncompliance, if at any time throughout the model year, the CumSum statistic, C_i, for HC+NO_X, is greater than the action limit, H, for two consecutive tests.

§ 91.511 Suspension and revocation of certificates of conformity.

(a) The certificate of conformity is automatically suspended with respect to any engine failing pursuant to paragraph (a) of § 91.510 effective from the time that testing of that engine is completed.

(b) The Administrator may suspend the certificate of conformity for an engine family which is determined to be in noncompliance pursuant to § 90.510(b). This suspension will not occur before fifteen days after the engine family is determined to be in noncompliance.

(c) If the results of testing pursuant to these regulations indicate that engines of a particular family produced at one plant of a manufacturer do not conform to the regulations with respect to which the certificate of conformity was issued, the Administrator may suspend the certificate of conformity with respect to that family for engines manufactured by the manufacturer at all other plants.

(d) Notwithstanding the fact that engines described in the application for certification may be covered by a certificate of conformity, the Administrator may suspend such certificate immediately in whole or in part if the Administrator finds any one of the following infractions to be substantial:

(1) The manufacturer refuses to comply with any of the requirements of this subpart.

(2) The manufacturer submits false or incomplete information in any report or information provided to the Administrator under this subpart.

(3) The manufacturer renders inaccurate any test data submitted under this subpart.

(4) An EPA enforcement officer is denied the opportunity to conduct activities authorized in this subpart and a warrant or court order is presented to the manufacturer or the party in charge of the facility in question.

(5) An EPA enforcement officer is unable to conduct activities authorized in § 91.505 because a manufacturer has located its facility in a foreign jurisdiction where local law prohibits those activities.

(e) The Administrator shall notify the manufacturer in writing of any suspension or revocation of a certificate of conformity in whole or in part. A suspension or revocation is effective upon receipt of the notification or fifteen days from the time an engine family is determined to be in noncompliance pursuant to § 91.510(b), whichever is later, except that the certificate is immediately suspended with respect to any failed engines as provided for in paragraph (a) of this section.

(f) The Administrator may revoke a certificate of conformity for an engine family after the certificate has been suspended pursuant to paragraph (b) or (c) of this section if the proposed remedy for the nonconformity, as reported by the manufacturer to the Administrator, is one requiring a design change or changes to the engine and/or emission control system as described in the application for certification of the affected engine family.

(g) Once a certificate has been suspended for a failed engine, as provided for in paragraph (a) of this section, the manufacturer must take the following actions before the certificate is reinstated for that failed engine:

(1) Remedy the nonconformity;

(2) Demonstrate that the engine conforms to the Family Emission Limit by retesting the engine in accordance with these regulations; and

(3) Submit a written report to the Administrator, after successful completion of testing on the failed engine, which contains a description of the remedy and test results for each engine in addition to other information that may be required by this part.

(h) Once a certificate for a failed engine family has been suspended pursuant to paragraph (b), (c) or (d) of this section, the manufacturer must take the following actions before the Administrator will consider reinstating the certificate:

(1) Submit a written report to the Administrator which identifies the reason for the noncompliance of the engines, describes the proposed remedy, including a description of any proposed quality control and/or quality assurance measures to be taken by the manufacturer to prevent future occurrences of the problem, and states the date on which the remedies will be implemented.

(2) Demonstrate that the engine family for which the certificate of conformity has been suspended does in fact comply with the regulations of this part by testing as many engines as needed so that the CumSum statistic, as calculated in § 91.508(a), falls below the action limit. Such testing must comply with the provisions of this part. If the manufacturer elects to continue testing individual engines after suspension of a certificate, the certificate is reinstated for any engine actually determined to be in conformance with the Family Emission Limits through testing in accordance with the applicable test procedures, provided that the Administrator has not revoked the certificate pursuant to paragraph (f) of this section.

(i) Once the certificate has been revoked for an engine family, if the manufacturer desires to continue introduction into commerce of a modified version of that family, the following actions must be taken before the Administrator may issue a certificate for that modified family:

(1) If the Administrator determines that the proposed change(s) in engine design may have an effect on emission performance deterioration, the Administrator shall notify the manufacturer, within five working days after receipt of the report in paragraph (h)(1) of this section, whether subsequent testing under this subpart will be sufficient to evaluate the proposed change or changes or whether additional testing will be required; and

(2) After implementing the change or changes intended to remedy the nonconformity, the manufacturer must demonstrate that the modified engine family does in fact conform with the regulations of this part by testing as many engines as needed from the modified engine family so that the CumSum statistic, as calculated in

§ 91.508(a) using the newly assigned FEL if applicable, falls below the action limit. When both of these requirements are met, the Administrator shall reissue the certificate or issue a new certificate, as the case may be, to include that family. As long as the CumSum statistic remains above the action limit, the revocation remains in effect.

(j) At any time subsequent to a suspension of a certificate of conformity for a test engine pursuant to paragraph (a) of this section, but not later than 15 days (or such other period as may be allowed by the Administrator) after notification of the Administrator's decision to suspend or revoke a certificate of conformity in whole or in part pursuant to paragraphs (b), (c), or (f) of this section, a manufacturer may request a hearing as to whether the tests have been properly conducted or any sampling methods have been properly applied.

(k) Any suspension of a certificate of conformity under paragraph (d) of this section:

(1) Shall be made only after the manufacturer concerned has been offered an opportunity for a hearing conducted in accordance with §§ 91.512, 91.513, and 91.514 and

(2) Need not apply to engines no longer in the possession of the manufacturer.

(l) After the Administrator suspends or revokes a certificate of conformity pursuant to this section and prior to the commencement of a hearing under § 91.512, if the manufacturer demonstrates to the Administrator's satisfaction that the decision to suspend or revoke the certificate was based on erroneous information, the Administrator shall reinstate the certificate.

(m) To permit a manufacturer to avoid storing non-test engines while conducting subsequent testing of the noncomplying family, a manufacturer may request that the Administrator conditionally reinstate the certificate for that family. The Administrator may reinstate the certificate subject to the following condition: the manufacturer must commit to recall all engines of that family produced from the time the certificate is conditionally reinstated if the CumSum statistic does not fall below the action limit and must commit to remedy any nonconformity at no expense to the owner.

§ 91.512 Request for public hearing.

(a) If the manufacturer disagrees with the Administrator's decision to suspend or revoke a certificate or disputes the basis for an automatic suspension pursuant to § 91.511(a), the manufacturer may request a public hearing.

(b) The manufacturer's request shall be filed with the Administrator not later than 15 days after the Administrator's notification of his or her decision to suspend or revoke, unless otherwise specified by the Administrator. The manufacturer shall simultaneously serve two copies of this request upon the Manager of the Engine Compliance Programs Group and file two copies with the Hearing Clerk for the Agency. Failure of the manufacturer to request a hearing within the time provided constitutes a waiver of the right to a hearing. Subsequent to the expiration of the period for requesting a hearing as of right, the Administrator may, in his or her discretion and for good cause shown, grant the manufacturer a hearing to contest the suspension or revocation.

(c) A manufacturer shall include in the request for a public hearing:

(1) A statement as to which engine configuration(s) within a family is to be the subject of the hearing;

(2) A concise statement of the issues to be raised by the manufacturer at the hearing, except that in the case of the hearing requested under § 91.511(j), the hearing is restricted to the following issues:

(i) Whether tests have been properly conducted (specifically, whether the tests were conducted in accordance with applicable regulations under this part and whether test equipment was properly calibrated and functioning);

(ii) Whether sampling plans and statistical analyses have been properly applied (specifically, whether sampling procedures and statistical analyses specified in this subpart were followed and whether there exists a basis for distinguishing engines produced at plants other than the one from which engines were selected for testing which would invalidate the Administrator's decision under § 91.511(c));

(3) A statement specifying reasons why the manufacturer believes it will prevail on the merits of each of the issues raised; and

(4) A summary of the evidence which supports the manufacturer's position on each of the issues raised.

(d) A copy of all requests for public hearings will be kept on file in the Office of the Hearing Clerk and will be made available to the public during Agency business hours.

§ 91.513 Administrative procedures for public hearing.

(a) The Presiding Officer shall be an Administrative Law Judge appointed pursuant to 5 U.S.C. 3105 (see also 5 CFR part 930 as amended).

(b) The Judicial Officer shall be an officer or employee of the Agency appointed as a Judicial Officer by the Administrator, pursuant to this section, who shall meet the qualifications and perform functions as follows:

(1) *Qualifications.* A Judicial Officer may be a permanent or temporary employee of the Agency who performs other duties for the Agency. The Judicial Officer shall not be employed by the Office of Enforcement and Compliance Assurance or have any connection with the preparation or presentation of evidence for a hearing held pursuant to this subpart. The Judicial Officer shall be a graduate of an accredited law school and a member in good standing of a recognized Bar Association of any state or the District of Columbia.

(2) *Functions.* The Administrator may consult with the Judicial Officer or delegate all or part of the Administrator's authority to act in a given case under this section to a Judicial Officer, provided that this delegation does not preclude the Judicial Officer from referring any motion or case to the Administrator when the Judicial Officer determines such referral to be appropriate.

(c) For the purposes of this section, one or more Judicial Officers may be designated by the Administrator. As work requires, a Judicial Officer may be designated to act for the purposes of a particular case.

(d) Summary decision. (1) In the case of a hearing requested under § 91.511(j), when it clearly appears from the data and other information contained in the request for a hearing that no genuine and substantial question of fact or law exists with respect to the issues specified in § 91.512(c)(2), the Administrator may enter an order denying the request for a hearing and reaffirming the original decision to suspend or revoke a certificate of conformity.

(2) In the case of a hearing requested under § 91.512 to challenge a suspension of a certificate of conformity for the reason(s) specified in § 91.511(d), when it clearly appears from the data and other information contained in the request for the hearing that no genuine and substantial question of fact or law exists with respect to the issue of whether the refusal to comply with this subpart was caused by conditions and circumstances outside the control of the manufacturer, the Administrator may enter an order denying the request for a hearing and suspending the certificate of conformity.

(3) Any order issued under paragraph (d)(1) or (d)(2) of this section has the force and effect of a final decision of the

Administrator, as issued pursuant to § 91.515.

(4) If the Administrator determines that a genuine and substantial question of fact or law does exist with respect to any of the issues referred to in paragraphs (d)(1) and (d)(2) of this section, the Administrator shall grant the request for a hearing and publish a notice of public hearing in the Federal Register or by such other means as the Administrator finds appropriate to provide notice to the public.

(e) Filing and service. (1) An original and two copies of all documents or papers required or permitted to be filed pursuant to this section and § 91.512(c) must be filed with the Hearing Clerk of the Agency. Filing is considered timely if mailed, as determined by the postmark, to the Hearing Clerk within the time allowed by this section and § 91.512(b). If filing is to be accomplished by mailing, the documents must be sent to the address set forth in the notice of public hearing referred to in paragraph (d)(4) of this section.

(2) To the maximum extent possible, testimony will be presented in written form. Copies of written testimony will be served upon all parties as soon as practicable prior to the start of the hearing. A certificate of service will be provided on or accompany each document or paper filed with the Hearing Clerk. Documents to be served upon the Manager of the Engine Compliance Programs Group must be sent by registered mail to: Manager, Engine Compliance Programs Group 6403–J, U.S. Environmental Protection Agency, 401 M Street SW., Washington, DC 20460. Service by registered mail is complete upon mailing.

(f) Computation of Time. (1) In computing any period of time prescribed or allowed by this section, except as otherwise provided, the day of the act or event from which the designated period of time begins to run is not included. Saturdays, Sundays, and federal legal holidays are included in computing the period allowed for the filing of any document or paper, except that when the period expires on a Saturday, Sunday, or federal legal holiday, the period is extended to include the next following business day.

(2) A prescribed period of time within which a party is required or permitted to do an act is computed from the time of service, except that when service is accomplished by mail, three days will be added to the prescribed period.

(g) Consolidation. The Administrator or the Presiding Officer in his or her discretion may consolidate two or more proceedings to be held under this section for the purpose of resolving one or more issues whenever it appears that consolidation will expedite or simplify consideration of these issues. Consolidation does not affect the right of any party to raise issues that could have been raised if consolidation had not occurred.

(h) Hearing Date. To the extent possible hearings under § 91.512 will be scheduled to commence within 14 days of receipt of the request for a hearing.

§ 91.514 Hearing procedures.

The procedures provided in § 86.1014–84(i) to (s) apply for hearings requested pursuant to § 91.512 regarding suspension, revocation, or voiding of a certificate of conformity.

§ 91.515 Appeal of hearing decision.

The procedures provided in § 86.1014–84(t) to (aa) apply for appeals filed with respect to hearings held pursuant to § 91.514.

§ 91.516 Treatment of confidential information.

Except for information required by § 91.509(e)(2) and § 91.509 (e)(6)(vi), information submitted to EPA pursuant to § 91.509(e) shall be made available to the public upon request by EPA notwithstanding any claim of confidentiality made by the submitter. The provisions for treatment of confidential information described in § 91.7 apply to the information required by § 91.509(e)(2) and all other information submitted pursuant to this subpart.

Subpart G—Selective Enforcement Auditing Regulations

§ 91.601 Applicability.

The requirements of subpart G are applicable to all marine SI engines subject to the provisions of subpart A of part 91.

§ 91.602 Definitions.

The definitions in subpart A and subpart F of this part apply to this subpart. The following definitions also apply to this subpart.

Acceptable quality level (AQL) means the maximum percentage of failing engines that can be considered a satisfactory process average for sampling inspections.

Inspection criteria means the pass and fail numbers associated with a particular sampling plan.

§ 91.603 Applicability of part 91, subpart F.

(a) For purposes of selective enforcement audits conducted under this subpart, marine SI engines subject to provisions of subpart B of this part are subject to regulations specified in subpart F of this part, except:

(1) Section 91.501 does not apply.

(2) Section 91.503 does not apply. See § 91.605.

(3) Section 91.506 does not apply. See § 91.606.

(4) Section 91.507 does not apply. See § 91.607.

(5) Section 91.508 does not apply.

(6) Paragraphs (d) and (e)(6)(v) and references to ''sample sizes, N and n'' of § 91.509 do not apply.

(7) The introductory text in § 91.509 does not apply. The following text applies:

''Within 5 working days after completion of testing of all engines pursuant to a test order.''

(8) The introductory text of § 91.509(e)(9) does not apply. The following text applies:

The following signed statement and endorsement by an authorized representative of the manufacturer:

This report is submitted pursuant to Sections 213 and 208 of the Clean Air Act. This Selective Enforcement Audit was conducted in complete conformance with all applicable regulations under 40 CFR Part 91 *et seq* and the conditions of the test order. No emission-related changes to production processes or quality control procedures for the engine family tested have been made between receipt of the test order and conclusion of the audit. All data and information reported herein is, to the best of (Company Name) knowledge, true and accurate. I am aware of the penalties associated with violations of the Clean Air Act and the regulations thereunder. (Authorized Company Representative.)

(9) Section 91.510 does not apply. See § 91.608.

§ 91.604 Test orders.

(a) A test order addressed to the manufacturer is required for any testing under this subpart.

(b) The test order is signed by the Assistant Administrator for Air and Radiation or his or her designee. The test order must be delivered in person by an EPA enforcement officer or EPA authorized representative to a company representative or sent by registered mail, return receipt requested, to the manufacturer's representative who signed the application for certification submitted by the manufacturer, pursuant to the requirements of the applicable section of subpart B of this part. Upon receipt of a test order, the manufacturer must comply with all of the provisions of this subpart and instructions in the test order.

(c) *Information included in test order.* (1) The test order will specify the engine family to be selected for testing, the manufacturer's engine assembly plant or

associated storage facility or port facility (for imported engines) from which the engines must be selected, the time and location at which engines must be selected, and the procedure by which engines of the specified family must be selected. The test order may specify the configuration to be audited and/or the number of engines to be selected per day. Engine manufacturers are required to select a minimum of four engines per day unless an alternate selection procedure is approved pursuant to § 91.606(a), or unless total production of the specified configuration is less than four engines per day. If total production of the specified configuration is less than four engines per day, the manufacturer selects the actual number of engines produced per day.

(2) The test order may include alternate families to be selected for testing at the Administrator's discretion in the event that engines of the specified family are not available for testing because those engines are not being manufactured during the specified time or are not being stored at the specified assembly plant, associated storage facilities, or port of entry.

(3) If the specified family is not being manufactured at a rate of at least two engines per day in the case of manufacturers specified in 40 CFR 89.607(g)(1), or one engine per day in the case of manufacturers specified in 40 CFR 89.607(g)(2), over the expected duration of the audit, the Assistant Administrator or her or his designated representative may select engines of the alternate family for testing.

(4) In addition, the test order may include other directions or information essential to the administration of the required testing.

(d) A manufacturer may submit a list of engine families and the corresponding assembly plants, associated storage facilities, or (in the case of imported engines) port facilities from which the manufacturer prefers to have engines selected for testing in response to a test order. In order that a manufacturer's preferred location be considered for inclusion in a test order for a particular engine family, the list must be submitted prior to issuance of the test order. Notwithstanding the fact that a manufacturer has submitted the list, the Administrator may order selection at other than a preferred location.

(e) Upon receipt of a test order, a manufacturer must proceed in accordance with the provisions of this subpart.

§ 91.605 Testing by the Administrator.

(a) The Administrator may require by test order under § 91.604 that engines of a specified family be selected in a manner consistent with the requirements of § 91.606 and submitted to the Administrator at the place designated for the purpose of conducting emission tests. These tests will be conducted in accordance with § 91.607 to determine whether engines manufactured by the manufacturer conform with the regulations with respect to which the certificate of conformity was issued.

(b) *Designating official data.* (1) Whenever the Administrator conducts a test on a test engine or the Administrator and manufacturer each conduct a test on the same test engine, the results of the Administrator's test comprise the official data for that engine.

(2) Whenever the manufacturer conducts all tests on a test engine, the manufacturer's test data is accepted as the official data, provided that if the Administrator makes a determination based on testing conducted under paragraph (a) of this section that there is a substantial lack of agreement between the manufacturer's test results and the Administrator's test results, no manufacturer's test data from the manufacturer's test facility will be accepted for purposes of this subpart.

(c) If testing conducted under § 91.604 is unacceptable under paragraph (b)(2) of this section, the Administrator must:

(1) Notify the manufacturer in writing of the Administrator's determination that the test facility is inappropriate for conducting the tests required by this subpart and the reasons therefor; and

(2) Reinstate any manufacturer's data upon a showing by the manufacturer that the data acquired under § 91.604 was erroneous and the manufacturer's data was correct.

(d) The manufacturer may request in writing that the Administrator reconsider the determination in paragraph (b)(2) of this section based on data or information which indicates that changes have been made to the test facility and these changes have resolved the reasons for disqualification.

§ 91.606 Sample selection.

(a) Engines comprising a test sample will be selected at the location and in the manner specified in the test order. If a manufacturer determines that the test engines cannot be selected in the manner specified in the test order, an alternative selection procedure may be employed, provided the manufacturer requests approval of the alternative procedure prior to the start of test sample selection, and the Administrator approves the procedure.

(b) The manufacturer must produce and assemble the test engines of the family selected for testing using its normal production and assembly process for engines to be distributed into commerce. If, between the time the manufacturer is notified of a test order and the time the manufacturer finishes selecting test engines, the manufacturer implements any change(s) in its production or assembly processes, including quality control, which may reasonably be expected to affect the emissions of the engines selected, then the manufacturer must, during the audit, inform the Administrator of such changes. If the test engines are selected at a location where they do not have their operational and emission control systems installed, the test order will specify the manner and location for selection of components to complete assembly of the engines. The manufacturer must assemble these components onto the test engines using normal assembly and quality control procedures as documented by the manufacturer.

(c) No quality control, testing, or assembly procedures will be used on the test engine or any portion thereof, including parts and subassemblies, that have not been or will not be used during the production and assembly of all other engines of that family, unless the Administrator approves the modification in production or assembly procedures pursuant to paragraph (b) of this section.

(d) The test order may specify that an EPA enforcement officer(s) or authorized representative(s), rather than the manufacturer, select the test engines according to the method specified in the test order.

(e) The order in which test engines are selected determines the order in which test results are to be used in applying the sampling plan in accordance with § 91.608.

(f) The manufacturer must keep on hand all untested engines, if any, comprising the test sample until a pass or fail decision is reached in accordance with § 91.608(e). The manufacturer may ship any tested engine which has not failed the requirements as set forth in § 91.608(b). However, once the manufacturer ships any test engine, it relinquishes the prerogative to conduct retests as provided in § 91.607(i).

§ 91.607 Test procedures.

(a)(1) For marine SI engines subject to the provisions of this subpart, the prescribed test procedures are the test

procedures as specified in subpart E of this part.

(2) The Administrator may, on the basis of a written application by a manufacturer, prescribe test procedures other than those specified in paragraph (a)(1) of this section for any marine engine he or she determines is not susceptible to satisfactory testing using the procedures specified in paragraph (a)(1) of this section.

(b)(1) The manufacturer may not adjust, repair, prepare, or modify the engines selected for testing and may not perform any emission tests on engines selected for testing pursuant to the test order unless this adjustment, repair, preparation, modification, and/or tests are documented in the manufacturer's engine assembly and inspection procedures and are actually performed or unless these adjustments and/or tests are required or permitted under this subpart or are approved in advance by the Administrator.

(2) The Administrator may adjust or cause to be adjusted any engine parameter which the Administrator has determined to be subject to adjustment for certification and Selective Enforcement Audit testing in accordance with § 91.112, to any setting within the physically adjustable range of that parameter, as determined by the Administrator in accordance with § 91.112, prior to the performance of any tests. However, if the idle speed parameter is one which the Administrator has determined to be subject to adjustment, the Administrator may not adjust it to any setting which causes a lower engine idle speed than would have been possible within the physically adjustable range of the idle speed parameter if the manufacturer had accumulated 12 hours of service on the engine under paragraph (c) of this section, all other parameters being identically adjusted for the purpose of the comparison. The manufacturer may be requested to supply information needed to establish an alternate minimum idle speed. The Administrator, in making or specifying these adjustments, may consider the effect of the deviation from the manufacturer's recommended setting on emission performance characteristics as well as the likelihood that similar settings will occur on in-use engines. In determining likelihood, the Administrator may consider factors such as, but not limited to, the effect of the adjustment on engine performance characteristics and information from similar in-use engines.

(c) *Service Accumulation.* Prior to performing exhaust emission testing on an SEA test engine, the manufacturer may accumulate on each engine a number of hours of service equal to the greater of 12 hours or the number of hours the manufacturer accumulated during certification on the emission data engine corresponding to the family specified in the test order.

(1) Service accumulation must be performed in a manner using good engineering judgment to obtain emission results representative of normal production engines. This service accumulation must be consistent with the new engine break-in instructions contained in the applicable owner's manual.

(2) The manufacturer must accumulate service at a minimum rate of 6 hours per engine during each 24-hour period, unless otherwise approved by the Administrator.

(i) The first 24-hour period for service begins as soon as authorized checks, inspections, and preparations are completed on each engine.

(ii) The minimum service accumulation rate does not apply on weekends or holidays.

(iii) If the manufacturer's service or target is less than the minimum rate specified (6 hours per day), then the minimum daily accumulation rate is equal to the manufacturer's service target.

(3) Service accumulation must be completed on a sufficient number of test engines during consecutive 24-hour periods to assure that the number of engines tested per day fulfills the requirements of paragraphs (g)(1) and (g)(2) of this section.

(d) The manufacturer may not perform any maintenance on test engines after selection for testing, nor may the Administrator allow deletion of any engine from the test sequence, unless requested by the manufacturer and approved by the Administrator before any engine maintenance or deletion.

(e) The manufacturer must expeditiously ship test engines from the point of selection to the test facility. If the test facility is not located at or in close proximity to the point of selection, the manufacturer must assure that test engines arrive at the test facility within 24 hours of selection. The Administrator may approve more time for shipment based upon a request by the manufacturer accompanied by a satisfactory justification.

(f) If an engine cannot complete the service accumulation or an emission test because of a malfunction, the manufacturer may request that the Administrator authorize either the repair of that engine or its deletion from the test sequence.

(g) Whenever a manufacturer conducts testing pursuant to a test order issued under this subpart, the manufacturer must notify the Administrator within one working day of receipt of the test order as to which test facility will be used to comply with the test order. If no test cells are available at a desired facility, the manufacturer must provide alternate testing capability satisfactory to the Administrator.

(1) A manufacturer with projected nonroad engine sales for the United States market for the applicable year of 7,500 or greater must complete emission testing at a minimum rate of two engines per 24-hour period, including each voided test and each smoke test.

(2) A manufacturer with projected nonroad engine sales for the United States market for the applicable year of less than 7,500 must complete emission testing at a minimum rate of one engine per 24-hour period, including each voided test and each smoke test.

(3) The Administrator may approve a lower daily rate of emission testing based upon a request by a manufacturer accompanied by a satisfactory justification.

(h) The manufacturer must perform test engine selection, shipping, preparation, service accumulation, and testing in such a manner as to assure that the audit is performed in an expeditious manner.

(i) Retesting. (1) The manufacturer may retest any engines tested during a Selective Enforcement Audit once a fail decision for the audit has been reached in accordance with § 91.608(e).

(2) The Administrator may approve retesting at other times based upon a request by the manufacturer accompanied by a satisfactory justification.

(3) The manufacturer may retest each engine a total of three times. The manufacturer must test each engine or vehicle the same number of times. The manufacturer may accumulate additional service before conducting a retest, subject to the provisions of paragraph (c) of this section.

(j) A manufacturer must test engines with the test procedure specified in subpart E of this part to demonstrate compliance with the exhaust emission standard (or applicable FEL) for $HC+NO_X$. If alternate procedures were used in certification pursuant to § 91.119, then those alternate procedures must be used.

§ 91.608 Compliance with acceptable quality level and passing and failing criteria for selective enforcement audits.

(a) The prescribed acceptable quality level is 40 percent.

(b) A failed engine is one whose final test results pursuant to § 91.509(b), for $HC+NO_X$, exceed the applicable family emission level.

(c) The manufacturer must test engines comprising the test sample until a pass decision is reached for $HC+NO_X$ or a fail decision is reached for $HC+NO_X$. A pass decision is reached when the cumulative number of failed engines, as defined in paragraph (b) of this section, for $HC+NO_X$ is less than or equal to the pass decision number, as defined in paragraph (d) of this section, appropriate to the cumulative number of engines tested. A fail decision is reached when the cumulative number of failed engines for $HC+NO_X$ is greater than or equal to the fail decision number, as defined in paragraph (d) of this section, appropriate to the cumulative number of engines tested.

(d) The pass and fail decision numbers associated with the cumulative number of engines tested are determined by using the tables in Appendix A to this subpart, ''Sampling Plans for Selective Enforcement Auditing of Marine Engines,'' appropriate to the projected sales as made by the manufacturer in its report to EPA under § 91.504(c)(1). In the tables in Appendix A to this subpart, sampling plan ''stage'' refers to the cumulative number of engines tested. Once a pass or fail decision has been made for $HC+NO_X$, the number of engines with final test results exceeding the emission standard for $HC+NO_X$ shall not be considered any further for the purposes of the audit.

(e) Passing or failing of an SEA occurs when the decision is made on the last engine required to make a decision under paragraph (c) of this section.

(f) The Administrator may terminate testing earlier than required in paragraph (c) of this section.

Appendix A to Subpart G of Part 91—Sampling Plans for Selective Enforcement Auditing of Marine Engines

TABLE 1.—SAMPLING PLAN CODE LETTER

Annual engine family sales	Code letter
20–50	AA.[1]
120–99	A.
100–299	B.
300–299	C.

TABLE 1.—SAMPLING PLAN CODE LETTER—Continued

Annual engine family sales	Code letter
500 or greater	D.

[1] A manufacturer may optionally use either the sampling plan for code letter ''AA'' or sampling plan for code letter ''A'' for Selective Enforcement Audits of engine families with annual sales between 20 and 50 engines. Additionally, the manufacturer may switch between these plans during the audit.

TABLE 2.—SAMPLING PLAN FOR CODE LETTER ''AA''

[Sample inspection criteria]

Stage	Pass No.	Fail No.	Stage	Pass No.	Fail No.
1	([1])	([2])	11	4	8
2	([1])	([2])	12	4	9
3	0	([2])	13	5	9
4	0	([2])	14	5	10
5	1	5	15	6	10
6	1	6	16	6	10
7	2	6	17	7	10
8	2	7	18	8	10
9	3	7	19	8	10
10	3	8	20	9	10

[1] Test sample passing not permitted at this stage.
[2] Test sample failure not permitted at this stage.

TABLE 3.—SAMPLING PLAN FOR CODE LETTER ''A''

[Sample inspection criteria]

Stage	Pass No.	Fail No.	Stage	Pass No.	Fail No.
1	([1])	([2])	16	6	11
2	([1])	([2])	17	7	12
3	([1])	([2])	18	7	12
4	0	([2])	19	8	13
5	0	([2])	20	8	13
6	1	6	21	9	14
7	1	7	22	10	14
8	2	7	23	10	15
9	2	8	24	11	15
10	3	8	25	11	16
11	3	8	26	12	16
12	4	9	27	12	17
13	5	10	28	13	17
14	5	10	29	14	17
15	6	11	30	16	17

[1] Test sample passing not permitted at this stage.
[2] Test sample failure not permitted at this stage.

TABLE 4.—SAMPLING PLAN FOR CODE LETTER ''B''

[Sample inspection criteria]

Stage	Pass No.	Fail No.
1	([1])	([2])
2	([1])	([2])
3	([1])	([2])

TABLE 4.—SAMPLING PLAN FOR CODE LETTER ''B''—Continued

[Sample inspection criteria]

Stage	Pass No.	Fail No.
4	([1])	([2])
5	0	([2])
6	1	6
7	1	7
8	2	7
9	2	8
10	3	8
11	3	9
12	4	9
13	4	10
14	5	10
15	5	11
16	6	12
17	6	12
18	7	13
19	8	13
20	8	14
21	9	14
22	9	15
23	10	15
24	10	16
25	11	16
26	11	17
27	12	17
28	12	18
29	13	18
30	13	19
31	14	19
32	14	20
33	15	20
34	16	21
35	16	21
36	17	22
37	17	22
38	18	22
39	18	22
40	21	22

[1] Test sample passing not permitted at this stage.
[2] Test sample failure not permitted at this stage.

TABLE 5.—SAMPLING PLAN FOR CODE LETTER ''C''

[Sample inspection criteria]

Stage	Pass No.	Fail No.
1	([1])	([2])
2	([1])	([2])
3	([1])	([2])
4	([1])	([2])
5	0	([2])
6	0	6
7	1	7
8	2	7
9	2	8
10	3	9
11	3	9
12	4	10
13	4	10
14	5	11
15	5	11
16	6	12
17	6	12
18	7	13
19	7	13
20	8	14

TABLE 5.—SAMPLING PLAN FOR CODE LETTER ''C''—Continued

[Sample inspection criteria]

Stage	Pass No.	Fail No.
21	8	14
22	9	15
23	10	15
24	10	16
25	11	16
26	11	17
27	12	17
28	12	18
29	13	18
30	13	19
31	14	19
32	14	20
33	15	20
34	15	21
35	16	21
36	16	22
37	17	22
38	18	23
39	18	23
40	19	24
41	19	24
42	20	25
43	20	25
44	21	26
45	21	27
46	22	27
47	22	27
48	23	27
49	23	27
50	26	27

[1] Test sample passing not permitted at this stage.

[2] Test sample failure not permitted at this stage.

TABLE 6.—SAMPLING PLAN FOR CODE LETTER ''D''

[Sample inspection criteria]

Stage	Pass No.	Fail No.
1	([1])	([2])
2	([1])	([2])
3	([1])	([2])
4	([1])	([2])
5	0	([2])
6	0	6
7	1	7
8	2	8
9	2	8
10	3	9
11	3	9
12	4	10
13	4	10
14	5	11
15	5	11
16	6	12
17	6	12
18	7	13
19	7	13
20	8	14
21	8	14
22	9	15
23	9	15
24	10	16
25	11	16
26	11	17
27	12	17

TABLE 6.—SAMPLING PLAN FOR CODE LETTER ''D''—Continued

[Sample inspection criteria]

Stage	Pass No.	Fail No.
28	12	18
29	13	19
30	13	19
31	14	20
32	14	20
33	15	21
34	15	21
35	16	22
36	16	22
37	17	23
38	17	23
39	18	24
40	18	24
41	19	25
42	19	26
43	20	26
44	21	27
45	21	27
46	22	28
47	22	28
48	23	29
49	23	29
50	24	30
51	24	30
52	25	31
53	25	31
54	26	32
55	26	32
56	27	33
57	27	33
58	28	33
59	28	33
60	32	33

[1] Test sample passing not permitted at this stage.

[2] Test sample failure not permitted at this stage.

Subpart H—Importation of Nonconforming Marine Engines

§ 91.701 Applicability.

(a) Except where otherwise indicated, this subpart is applicable to marine SI engines for which the Administrator has promulgated regulations under this part prescribing emission standards, including engines incorporated into marine vessels or equipment, that are offered for importation or imported into the United States, but which engines, at the time of importation or being offered for importation are not covered by certificates of conformity issued under section 213 and section 206(a) of the Clean Air Act as amended (that is, which are nonconforming marine engines as defined in § 91.702), and this part. Compliance with regulations under this subpart does not relieve any person or entity from compliance with other applicable provisions of the Clean Air Act.

(b) Regulations prescribing further procedures for the importation of marine SI engines and marine vessels or equipment into the customs territory of the United States, as defined in 19 U.S.C. 1202, are set forth in U.S. Customs Service regulations.

§ 91.702 Definitions.

The definitions in subpart A of this part apply to this subpart. The following definitions also apply to this subpart.

Certificate of conformity. The document issued by the Administrator under section 213 and section 206(a) of the Act.

Nonconforming marine engine. A marine SI engine which is not covered by a certificate of conformity prior to importation or being offered for importation (or for which such coverage has not been adequately demonstrated to EPA). Also, a marine SI engine which was originally covered by a certificate of conformity, but subsequently altered or modified such that it is no longer in a certified configuration.

Original engine manufacturer (OEM). The entity which originally manufactured the marine engine.

United States. United States includes the customs territory of the United States as defined in 19 U.S.C. 1202, and the Virgin Islands, Guam, American Samoa, and the Commonwealth of the Northern Mariana Islands.

§ 91.703 Admission.

(a) A nonconforming marine SI engine offered for importation may only be imported into the United States under § 91.704, provided that an exemption or exclusion is granted by the Administrator. Final admission shall not be granted unless the marine SI engine is exempted or excluded under § 91.704.

(b) In order to obtain admission the importer must submit to the Administrator a written request for approval containing the following:

(1) Identification of the importer of the marine SI engine and the importer's address, telephone number, and taxpayer identification number;

(2) Identification of the marine SI engine owner, the owner's address, telephone number, and taxpayer identification number;

(3) Identification of the marine SI engine including make, model, identification number, and original production year;

(4) Information indicating under what provision of these regulations the marine SI engine is to be imported;

(5) Identification of the place(s) where the subject marine SI engine is to be stored;

(6) Authorization for EPA enforcement officers to conduct inspections or testing otherwise

permitted by the Act or regulations thereunder; and

(7) Such other information as is deemed necessary by the Administrator.

§ 91.704 Exemptions and exclusions.

(a) Individuals and businesses are eligible to import nonconforming marine SI engines into the United States only under the provisions of this section.

(b) Notwithstanding other requirements of this subpart, a nonconforming marine SI engine entitled to one of the temporary exemptions of this paragraph may be conditionally admitted into the United States if prior written approval for the conditional admission is obtained from the Administrator. Conditional admission must be under bond. The Administrator may request that the U.S. Customs Service require a specific bond amount to ensure compliance with the requirements of the Act and this subpart. A written request for approval from the Administrator must contain the identification required in § 91.703(b) and information that demonstrates that the importer is entitled to the exemption. Noncompliance with provisions of this section may result in the forfeiture of the total amount of the bond or exportation of the marine engine. The following temporary exemptions are permitted by this paragraph:

(1) *Exemption for repairs or alterations.* Upon written approval by EPA, a person may conditionally import under bond a nonconforming marine SI engine solely for purpose of repair(s) or alteration(s). The marine SI engines may not be operated in the United States other than for the sole purpose of repair or alteration. It may not be sold or leased in the United States and must be exported upon completion of the repair(s) or alteration(s).

(2) *Testing exemption.* A nonconforming test marine SI engine may be conditionally imported under bond by a person subject to the requirements of § 91.1005. A test marine SI engine may be operated in the United States provided that the operation is an integral part of the test. This exemption is limited to a period not exceeding one year from the date of importation unless a request is made by the appropriate importer, and subsequently granted by EPA, concerning the marine engine in accordance with § 91.1005(f) for a subsequent one-year period.

(3) *Display exemptions.* (i) A nonconforming marine engine intended solely for display may be conditionally imported under bond subject to the requirements of § 91.1007.

(ii) A display marine engine may be imported by any person for purposes related to a business or the public interest. Such purposes do not include collections normally inaccessible or unavailable to the public on a daily basis, display of a marine engine at a dealership, private use, or other purpose that the Administrator determines is not appropriate for display exemptions. A display marine engine may not be sold or leased in the United States and may not be operated in the United States except for the operation incident and necessary to the display purpose.

(iii) A temporary display exemption is granted for 12 months or for the duration of the display purpose, whichever is shorter. Extensions of up to 12 months each are available upon approval by the Administrator. In no circumstances, however, may the total period of exemption exceed 36 months.

(c) Notwithstanding any other requirement of this subpart, a marine SI engine may be finally admitted into the United States under this paragraph if prior written approval for such final admission is obtained from the Administrator. A request for approval is to contain the identification information required in § 91.703(b) (except for § 91.703(b)(5)) and information that demonstrates that the importer is entitled to the exemption. The following exemptions are permitted by this paragraph:

(1) *National security exemption.* A nonconforming marine engine may be imported under the national security exemption found at § 91.1008.

(2) *Exemption for marine engines identical to United States certified versions.* (i) Any person (including businesses) is eligible for importing a nonconforming marine SI engine into the United States under the provisions of this paragraph. An exemption will be granted if the applicant demonstrates to the satisfaction of the Administrator that the marine engine:

(A) Is owned by the importer;

(B) Is not offered for importation for the purpose of resale; and

(C) Is proven to be identical, in all material respects, to a marine SI engine of the same or later model year certified by the Original Engine Manufacturer for sale in the United States or is proven to have been modified to be identical, in all material respects, to a marine engine of the same or later model year certified by the OEM for sale in the United States according to complete written instructions provided by the OEM's United States representative, or his/her designee.

(ii) Proof of conformity.

(A) Documentation submitted pursuant to this section for the purpose of proving conformity of individual marine engines is to contain sufficiently organized data or evidence demonstrating that the marine engine identified pursuant to § 91.703(b) is identical, in all material respects, to a marine engine identified in an OEM's application for certification.

(B) If the documentation does not contain all the information required by this part, or is not sufficiently organized, EPA will notify the importer of any areas of inadequacy and that the documentation will not receive further consideration until the required information or organization is provided.

(C) If EPA determines that the documentation does not clearly or sufficiently demonstrate that a marine engine is eligible for importation under this paragraph, EPA will notify the importer in writing.

(D) If EPA determines that the documentation clearly and sufficiently demonstrates that a marine engine is eligible for importation under this paragraph, EPA will grant approval for final admission in writing.

(d) Foreign diplomatic and military personnel may conditionally import a nonconforming marine engine without bond. At the time of conditional admission, the importer must submit to the Administrator the written report required in § 91.703(b) (except for information required by § 91.703(b)(5)) and a statement from the U.S. Department of State confirming qualification for this exemption. Foreign military personnel may, in lieu of a statement from the U.S. Department of State, submit to the Administrator a copy of their orders for duty in the United States. The marine SI engine may not be sold or leased in the United States and must be exported if the individual's diplomatic status or the foreign military orders for duty in the U.S. are no longer applicable, as determined by the Department of State, unless subsequently brought into conformity with U.S. emission requirements in accordance with § 91.704(c)(2).

(e) Competition exclusion. A nonconforming marine engine may be conditionally imported by any person provided the importer demonstrates to the Administrator that the marine engine is used to propel a marine vessel used solely for competition and obtains prior written approval from the Administrator. A nonconforming engine imported pursuant to this paragraph may not be operated in the United States except for that operation incident and necessary for the competition

purpose, unless subsequently brought into conformity with United States emission requirements in accordance with § 91.704(c)(2).

(f) An application for exemption and exclusion provided for in paragraphs (b), (c), and (e) of this section shall be mailed to: U.S. Environmental Protection Agency, Office of Mobile Sources, Engine Programs & Compliance Division (6403–J), 401 M Street, SW., Washington, DC 20460, Attention: Imports.

§ 91.705 Prohibited acts; penalties.

(a) The importation of a marine SI engine, including a marine engine incorporated into marine vessels or equipment, which is not covered by a certificate of conformity other than in accordance with this subpart and the entry regulations of the U.S. Customs Service is prohibited. Failure to comply with this section is a violation of § 91.1103(a)(1) and section 213(d) of the Act.

(b) Unless otherwise permitted by this subpart, during a period of conditional admission, the importer of a marine engine may not:

(1) Register, license, or operate the marine engine in the United States;

(2) Sell or lease or offer the marine engine for sale or lease;

(c) A marine SI engine conditionally admitted pursuant to § 91.704 (b), (d) or (e) and not granted final admission by the end of the period of conditional admission, or within such additional time as the Administrator and the U.S. Customs Service may allow, is deemed to be unlawfully imported into the United States in violation of § 91.1103(a)(1), section 213(d) and section 203 of the Act, unless the marine engine has been delivered to the U.S. Customs Service for export or other disposition under applicable Customs laws and regulations. A marine SI engine not so delivered is subject to seizure by the U.S. Customs Service.

(d) An importer who violates § 91.1103(a)(1), section 213(d) and section 203 of the Act is subject to a civil penalty under § 91.1106 and section 205 of the Act of not more than $25,000 for each marine engine subject to the violation. In addition to the penalty provided in the Act, where applicable, a person or entity who imports an engine under the exemption provisions of § 91.704(b) and, who fails to deliver the marine engine to the U.S. Customs Service by the end of the period of conditional admission is liable for liquidated damages in the amount of the bond required by applicable Customs laws and regulations.

§ 91.706 Treatment of confidential information.

The provisions for treatment of confidential information as described in § 91.7 apply.

Subpart I—In-Use Testing and Recall Regulations

§ 91.801 Applicability.

The requirements of subpart I are applicable to all marine SI engines subject to the provisions of subpart A of part 91.

(a) Marine engines subject to provisions of subpart B of this part are subject to recall regulations specified in 40 CFR part 85, subpart S, except for the items set forth in this subsection.

(b) Reference to section 214 of the Clean Air Act in 40 CFR 85.1801(a) does not apply. Reference to section 216 of the Clean Air Act does apply.

(c) Reference to section 202 of the Act in 40 CFR 85.1802(a) does not apply. Reference to section 213 of the Act does apply.

(d) Reference to ''family particulate emission limits as defined in Part 86 promulgated under section 202 of the Act'' in 40 CFR 85.1803(a) and 85.1805(a)(1) does not apply. Family emission limits as defined in 40 CFR part 89 promulgated under section 213 of the Act does apply.

(e) Add the following paragraph to 40 CFR 85.1805 (a)(9): A telephone number provided by the manufacturer, which may be used to report difficulty in obtaining recall repairs.

(f) The requirements of the Manufacturer In-use testing program set forth in §§ 91.803 through 91.805 are waived for existing technology OB/PWC as defined in § 91.3 through model year 2003.

(1) The Administrator has the discretion to waive the requirements of the Manufacturer In-use testing program set forth in sections 91.803 through 91.805 for existing technology OB/PWC for a specific engine family up to model year 2005 if, upon the request of the manufacturer, the Administrator determines that the engine family will be phased out of U.S. production by model year 2005. As a condition to receiving such a waiver for either model year 2004 or 2005 or both, the manufacturer must discontinue U.S. production according to the schedule upon which the Administrator based the waiver. Failure to do so by the manufacturer will void *ab initio* the certificate of conformity.

(2) A manufacturer request under paragraph (f)(1) of this section must be in writing and must apply to a specific engine family. The request must identify the engine family designation, the schedule for phasing the engine family out of U.S. production, and any other information the Administrator may require.

§ 91.802 Definitions.

(a) For the purposes of this subpart, except as otherwise provided, the definitions in subpart A of this part apply to this subpart.

(b) The definitions of 40 CFR Part 85, subpart S, § 85.1801 also apply to this Part.

§ 91.803 Manufacturer In-use testing program.

(a) EPA shall annually identify engine families and those configurations within families which the manufacturer must then subject to in-use testing as described below. For each model year, EPA may identify a number of engine families that is no greater than twenty-five percent of the number of engine families to which this subpart is applicable produced in that model year.

(b) For each engine family identified by EPA, engine manufacturers shall perform emission testing of an appropriate sample of in-use engines from each engine family. Manufacturers shall submit data from this in-use testing to EPA.

(c) *Number of engines to be tested.* An engine manufacturer shall test in-use engines from each engine family identified by EPA. Engines to be tested shall have accumulated between half and three-quarters of the family's useful life. The number of engines to be tested by a manufacturer will be determined by the following method:

(1) A minimum of four (4) engines per family provided that no engine fails any standard. For each failing engine, two more engines shall be tested until the total number of engines equals ten (10).

(2) For engine families of less than 500 engines for the identified model year or for engine manufacturers who make less than or equal to 2,000 for that model year, a minimum of two (2) engines per family provided that no engine fails any standard. For each failing engine, two more engines shall be tested until the total number of engines equals ten (10).

(3) If an engine family was certified using carry over emission data and has been previously tested under paragraph (c) (1) or (2) of this section (and EPA has not ordered a recall for that family), then only one engine for that family must be tested. If that one engine fails any pollutant, testing must be conducted as outlined at paragraph (c) (1) or (2) of this section, whichever is appropriate.

(d) At the discretion of the Administrator, an engine manufacturer may test more engines than the minima described in paragraph (c) of this section or may concede failure before testing a total of ten (10) engines.

(e) The Administrator will consider failure rates, average emission levels and the existence of any defects among other factors in determining whether to pursue remedial action under this subpart. The Administrator may order a recall pursuant to §§ 91.807–91.814 before testing reaches the tenth engine.

(f) The Administrator may approve an alternative to manufacturer in-use testing, where:

(1) engine family production is less than or equal to 200 per year; or

(2) engines cannot be obtained for testing because they are used substantially in craft which are not conducive to engine removal such as large vessels where the engine can not be removed without dismantling either the engine or the vessel; or

(3) other compelling circumstances associated with the structure of the industry and uniqueness of marine engine applications. Such alternatives shall be designed to determine whether the engine family is in compliance in-use.

(g) *Collection of in-use engines.* The engine manufacturer shall procure in-use engines which have been operated for between half and three-quarters of the engine's useful life. The engine manufacturer may test engines from more than one model year in a given year. The manufacturer shall begin testing within twelve calendar months after receiving notice that EPA has identified a particular engine family for testing and shall complete testing of such engine family within twelve calendar months from the start of such testing. Test engines may be procured from sources associated with the engine manufacturer (i.e., manufacturer established fleet engines, etc.) or from sources not associated with the manufacturer (i.e., consumer-owned engines, independently-owned fleet engines, etc.).

§ 91.804 Maintenance, procurement and testing of in-use engines.

(a) A test engine must have a maintenance and use history representative of actual in-use conditions.

(1) To comply with this requirement a manufacturer must obtain information from the end users regarding the accumulated usage, maintenance, operating conditions, and storage of the test engines.

(2) Documents used in the procurement process must be maintained as required in § 91.121.

(b) The manufacturer may perform minimal set-to-spec maintenance on components of a test engine that are not subject to parameter adjustment. Maintenance may include only that which is listed in the owner's instructions for engines with the amount of service and age of the acquired test engine. Documentation of all maintenance and adjustments shall be maintained and retained as required by § 91.121.

(c) At least one valid emission test, according to the test procedure outlined in subpart E of this part, is required for each in-use engine.

(d) The Administrator may waive portions or requirements of the test procedure, if any, that are not necessary to determine in-use compliance.

(e) If a selected in-use engine fails to comply with any applicable emission standards, the manufacturer shall determine the reason for noncompliance. The manufacturer must report all such reasons of noncompliance within fifteen days of completion of testing.

§ 91.805 In-use test program reporting requirements.

(a) The manufacturer shall electronically submit to the Administrator within three (3) months of completion of testing all emission testing results generated from the in-use testing program. The following information must be reported for each test engine:

(1) Engine family,

(2) Model,

(3) Engine serial number,

(4) Date of manufacture,

(5) Estimated hours of use,

(6) Date and time of each test attempt,

(7) Results (if any) of each test attempt,

(8) Results of all emission testing,

(9) Summary of all maintenance and/or adjustments performed,

(10) Summary of all modifications and/or repairs,

(11) Determinations of noncompliance.

(b) The manufacturer must electronically submit the results of its in-use testing with a pre-approved information heading. The Administrator may exempt manufacturers from this requirement upon written request with supporting justification.

(c) All testing reports and requests for approvals made under this subpart shall be addressed to: Manager, Engine Compliance Programs Group 6403–J, U.S. Environmental Protection Agency, 401 M Street SW., Washington, DC 20460.

(d) The Administrator may approve and/or require modifications to a manufacturer's in-use testing programs.

§ 91.806 Voluntary emissions recall.

(a) Prior to an EPA ordered recall, the manufacturer may perform a voluntary emissions recall pursuant to regulations at § 91.904 of this part. Such manufacturer is subject to the reporting requirements at § 91.905 of this part.

(b) Once EPA determines that a substantial number of engines fail to conform with the requirements of section 213 of the Act or this part, the manufacturer will not have the option of a voluntary emissions recall.

Subpart J—Emission-related Defect Reporting Requirements, Voluntary Emission Recall Program

§ 91.901 Applicability.

The requirements of this subpart J are applicable to all marine engines subject to the provisions of subpart A of this part 91. The requirement to report emission-related defects affecting a given class or category of engines remains applicable for five years from the end of the model year in which such engines were manufactured.

§ 91.902 Definitions.

The definitions in subpart A of this part apply to this subpart.

§ 91.903 Applicability to Part 85, subpart T.

(a) Marine SI engines subject to provisions of subpart A of this part are subject to emission defect reporting requirements specified in 40 CFR Part 85, subpart T, except for the items set forth in this section.

(b) 40 CFR 85.1901 does not apply. See § 91.901.

(c) Reference to the Clean Air Act, 42 U.S.C. 1857 in 40 CFR 85.1902(a) does not apply. Reference to the Clean Air Act, 42 U.S.C. 7401 does apply.

(d) Reference to the ''approved Application for Certification required by 40 CFR 86.077–22 and like provisions of Part 85 and Part 86 of Title 40 of the Code of Federal Regulations'' does not apply. Reference to the approved application for certification required by 91.108 and like provisions of Part 91 does apply.

(e) Reference to section 202(d) of the Act in § 85.1902(c) does not apply. Reference to section 202(d) and section 213 of the Act does apply.

(f) Reference to section 214 of the Act in § 85.1902(e) and (f) does not apply. Reference to section 216 of the Act does apply.

§ 91.904 Voluntary emission recall.

(a) A manufacturer, prior to initiating a voluntary emission recall program, must submit to the EPA the following information for a 15 day review and comment period:

(1) A description of each class or category of engines recalled, including the number of engines to be recalled, the model year, and such other information as may be required to identify the engines recalled;

(2) A description of the specific modifications, alterations, repairs, corrections, adjustments, or other changes to be made to correct the engines affected by the emission-related defect;

(3) A description of the method by which the manufacturer will notify engine owners including copies of any letters of notification to be sent to engine owners;

(4) A description of the proper maintenance or use, if any, upon which the manufacturer conditions eligibility for repair under the recall plan, and a description of the proof to be required of an engine owner to demonstrate compliance with any such conditions;

(5) A description of the procedure to be followed by engine owners to obtain correction of the nonconformity. This may include designation of the date on or after which the owner can have the nonconformity remedied, the time reasonably necessary to perform the labor to remedy the defect, and the designation of facilities at which the defect can be remedied;

(6) A description of the class of persons other than dealers and authorized warranty agents of the manufacturer who will remedy the defect; and

(7) A description of the system by which the manufacturer will assure that an adequate supply of parts is available to perform the repair under the plan.

(b) The manufacturer must submit at least one report on the progress of the recall campaign. This report is submitted one year from the date notification begins and includes the following information:

(1) The methods used to notify both engine owners, dealers and other individuals involved in the recall campaign;

(2) The number of engines known or estimated to be affected by the emission-related defect and an explanation of the means by which this number was determined;

(3) The number of engines actually receiving repair under the plan;

(4) The number of engine owners, dealers, and other individuals involved in the recall campaign that have been notified and the number of engines that have actually received repair; and

(5) The number of engines determined to be ineligible for remedial action due to a failure to properly maintain or use such engines.

§ 91.905 Reports, voluntary recall plan filing, record retention.

(a) The defect report, voluntary recall plan, and the voluntary recall progress report shall be sent to: Manager, Engine Compliance Programs Group 6403–J, Environmental Protection Agency, 401 M St. SW, Washington, DC 20460.

(b) The information gathered by the manufacturer to compile the reports must be retained for not less than five years from the date of the manufacture of the engines and must be made available to duly authorized officials of the EPA upon request.

§ 91.906 Responsibility under other legal provisions preserved.

The filing of any report under the provisions of this subpart will not affect a manufacturer's responsibility to file reports or applications, obtain approval, or give notice under any provision of law.

§ 91.907 Disclaimer of production warranty applicability.

(a) The act of filing an Emission Defect Information Report is inconclusive as to the existence of a defect subject to the warranty provided by section 207(a) of the Act.

(b) A manufacturer may include on each page of its Emission Defect Information Report a disclaimer stating that the filing of a Defect Information Report pursuant to these regulations is not conclusive as to the applicability of the warranty provided by subpart M of this part.

Subpart K—Exclusion and Exemption of Marine SI Engines

§ 91.1001 Applicability.

The requirements of this subpart K are applicable to all marine spark-ignition propulsion engines subject to the provisions of subpart A of this part 91.

§ 91.1002 Definitions.

The definitions in subpart A of this part apply to this subpart. The following definitions also apply to this subpart:

Exemption means exemption from the prohibitions of § 91.1103.

Export exemption means an exemption granted under § 91.1104(b) for the purpose of exporting new marine SI engines.

National security exemption means an exemption which may be granted under § 91.1104(b) for the purpose of national security.

Manufacturer-owned marine engine means an uncertified marine SI engine owned and controlled by a marine SI engine manufacturer and used in a manner not involving lease or sale by itself or in a marine vessel or piece of equipment employed from year to year in the ordinary course of business for product development, production method assessment, or market promotion purposes.

Testing exemption means an exemption which may be granted under § 91.1104(b) for the purpose of research, investigations, studies, demonstrations or training, but not including national security.

§ 91.1003 Exclusions based on section 216(10) of the Act.

(a) For the purpose of determining the applicability of section 216(10) of the Act, any marine SI engine as that term is defined in subpart A of this part, is deemed a nonroad engine.

(b) EPA will maintain a list of models of marine SI engines, and the marine vessels which use such engines, that have been determined to be excluded because they are used solely for competition. This list will be available to the public and may be obtained by writing to the following address: Group Manager, Engine Compliance Programs Group, Engine Programs and Compliance Division (6403J), Environmental Protection Agency, 401 M Street SW, Washington, DC 20460.

(c) Upon written request with supporting documentation, EPA will make written determinations as to whether certain engines are or are not marine SI engines. Engines that are determined not to be marine SI engines are excluded from regulations under this part but may be subject to regulations under another part.

§ 91.1004 Who may request an exemption.

(a) Any person may request a testing exemption under § 91.1005.

(b) Any marine SI engine manufacturer may request a national security exemption under § 91.1008.

(c) For marine SI engine manufacturers, marine SI engines for export purposes are exempt without application, subject to the provisions of § 91.1009.

(d) For eligible manufacturers, as determined by § 91.1006, manufacturer-owned marine SI engines are exempt without application, subject to the provisions of § 91.1006.

(e) For any person, display marine SI engines are exempt without application, subject to the provisions of § 91.1007.

§ 91.1005 Testing exemption.

(a) Any person requesting a testing exemption must demonstrate the following:

(1) That the proposed test program has a purpose which constitutes an appropriate basis for an exemption in accordance with § 91.1104(b);

(2) That the proposed test program necessitates the granting of an exemption;

(3) That the proposed test program is reasonable in scope; and

(4) That the proposed test program exhibits a degree of control consonant with the purpose of the program and the EPA's monitoring requirements.

(5) Paragraphs (b), (c), (d), and (e) of this section describe what constitutes a sufficient demonstration for each of the four identified elements.

(b) With respect to the purpose of the proposed test program, an appropriate purpose would be research, investigations, studies, demonstrations, or training, but not national security. A concise statement of purpose is a required item of information.

(c) With respect to the necessity that an exemption be granted, necessity arises from an inability to achieve the stated purpose in a practicable manner without performing or causing to be performed one or more of the prohibited acts under § 91.1103. In appropriate circumstances, time constraints may be a sufficient basis for necessity, but the cost of certification alone, in the absence of extraordinary circumstances, is not a basis for necessity.

(d) With respect to reasonableness, a test program must exhibit a duration of reasonable length and affect a reasonable number of engines. In this regard, required items of information include:

(1) An estimate of the program's duration.

(2) The maximum number of marine engines involved.

(e) With respect to control, the test program must incorporate procedures consistent with the purpose of the test and be capable of affording EPA monitoring capability. As a minimum, required items of information include:

(1) The technical nature of the test;

(2) The site of the test;

(3) The duration and accumulated engine operation associated with the test;

(4) The ownership arrangement with regard to the engines involved in the test;

(5) The intended final disposition of the engines;

(6) The manner in which the engine identification numbers will be identified, recorded, and made available; and

(7) The means or procedure whereby test results will be recorded.

(f) A manufacturer of new marine SI engines may request a testing exemption to cover marine SI engines intended for use in test programs planned or anticipated over the course of a subsequent one-year period. Unless otherwise required by the Manager, Engine Compliance Programs Group, a manufacturer requesting such an exemption need only furnish the information required by paragraphs (a)(1) and (d)(2) of this section along with a description of the recordkeeping and control procedures that will be employed to assure that the engines are used for purposes consistent with section 91.1104(b).

§ 91.1006 Manufacturer-owned exemption and precertification exemption.

(a) Except as provided in paragraph (b) of this section, any manufacturer-owned marine SI engine, as defined by § 91.1002, is exempt from compliance with § 91.1103, without application, if the manufacturer complies with the following terms and conditions:

(1) The manufacturer must establish, maintain, and retain the following adequately organized and indexed information on each exempted engine:

(i) engine identification number,

(ii) use of the engine on exempt status and

(iii) final disposition of any engine removed from exempt status.

(2) The manufacturer must provide right of entry and access to these records to EPA authorized representatives as outlined in § 91.505.

(3) Unless the requirement is waived or an alternative procedure is approved by the Director, Engine Programs & Compliance Division, the manufacturer must permanently affix a label to each marine engine on exempt status. This label should:

(i) Be affixed in a readily visible portion of the engine,

(ii) Be attached in such a manner that it cannot be removed without destruction or defacement,

(iii) State in the English language/and in block letters and numerals of a color that contrasts with the background of the label, the following information:

(A) The label heading ''Emission Control Information;''

(B) Full corporate name and trademark of manufacturer;

(C) Engine displacement, engine family identification, and model year of engine; or person or office to be contacted for further information about the engine;

(D) The statement ''This marine SI engine is exempt from the prohibitions of 40 CFR 91.1103.''

(4) No provision of paragraph (a)(3) of this section prevents a manufacturer from including any other information it desires on the label.

§ 91.1007 Display exemption.

An uncertified marine SI engine is a display engine when it is to be used solely for display purposes, will only be operated incident and necessary to the display purpose, and will not be sold unless an applicable certificate of conformity has been received or the engine has been finally admitted pursuant to subpart H of this part. A display engine is exempt without application.

§ 91.1008 National security exemption.

(a)(1) Any marine SI engine, otherwise subject to this part, which is used in a vessel that exhibits substantial features ordinarily associated with military combat such as armor and/or permanently affixed weaponry and which will be owned and/or used by an agency of the federal government with responsibility for national defense, will be exempt from these regulations for purposes of national security. No request for exemption is necessary.

(2) Manufacturers may request a national security exemption for any marine SI engine, otherwise subject to this part, which does not meet the conditions described in paragraph (a)(1) of this section. A manufacturer requesting a national security exemption must state the purpose for which the exemption is required and the request must be endorsed by an agency of the federal government charged with responsibility for national defense.

(b) EPA will maintain a list of models of marine SI engines (and the vessels which use them) that have been granted a national security exemption under paragraph (a)(2) of this section. This list will be available to the public and may be obtained by writing to the following address: Manager, Engine Compliance Programs Group 6403–J, Environmental Protection Agency, 401 M Street SW, Washington, DC 20460.

§ 91.1009 Export exemptions.

(a) A new marine SI engine intended solely for export, and so labeled or tagged on the outside of the container and on the engine itself, is subject to the provisions of § 91.1103, unless the importing country has emission standards for new marine engines which differ from EPA standards.

(b) For the purpose of paragraph (a) of this section, a country having no standards, whatsoever, is deemed to be

a country having emission standards which differ from EPA standards.

(c) EPA will maintain a list of foreign countries that have in force marine SI emission standards identical to U.S. EPA standards and have so notified EPA. This list may be obtained by writing to the following address: Manager, Engine Compliance Programs Group 6403–J, Environmental Protection Agency, 401 M Street, SW., Washington, DC. 20460. New marine SI engines exported to such countries must comply with EPA certification regulations.

(d) It is a condition of any exemption for the purpose of export under § 91.1004(b) that such exemption be void *ab initio* with respect to a new marine SI engine intended solely for export if such marine SI engine is sold, or offered for sale, to an ultimate purchaser in the United States for purposes other than export.

§ 91.1010 Granting of exemptions.

(a) If upon completion of the review of an exemption request made pursuant to § 91.1005 or § 91.1008, EPA determines it is appropriate to grant such an exemption, a memorandum of exemption will be prepared and submitted to the person requesting the exemption. The memorandum shall set forth the basis for the exemption, its scope, and such terms and conditions as are deemed necessary. Such terms and conditions shall generally include, but are not limited to, agreements by the applicant to conduct the exempt activity in the manner described to EPA, create and maintain adequate records accessible to EPA at reasonable times, employ labels for the exempt engines setting forth the nature of the exemption, take appropriate measures to assure that the terms of the exemption are met, and advise EPA of the termination of the activity and the ultimate disposition of the engines.

(b) Any exemption granted pursuant to paragraph (a) of this section is deemed to cover any subject engine only to the extent that the specified terms and conditions are complied with. A breach of any term or condition causes the exemption to be void *ab initio* with respect to any engine. Consequently, the causing or the performing of an act prohibited under § 91.1103(a) (1) or (3), other than in strict conformity with all terms and conditions of this exemption renders the person to whom the exemption is granted, and any other person to whom the provisions of § 91.1103 are applicable, liable under sections 204 and 205 of the Act.

§ 91.1011 Submission of exemption requests.

Requests for exemption or further information concerning exemptions and/or the exemption request review procedure should be addressed to: Manager, Engine Compliance Programs Group 6403J, Environmental Protection Agency, 401 M Street, SW., Washington, DC 20460.

§ 91.1012 Treatment of confidential information.

The provisions for treatment of confidential information described in § 91.7 apply to this subpart.

Subpart L—Prohibited Acts and General Enforcement Provisions

§ 91.1101 Applicability.

The requirements of subpart L are applicable to all marine engines and vessels subject to the provisions of subpart A of this part 91.

§ 91.1102 Definitions.

The definitions in subpart A of this part apply to this subpart. All terms not defined herein or in subpart A have the meaning given them in the Act.

§ 91.1103 Prohibited acts.

(a) The following acts and the causing thereof are prohibited:

(1)(i) In the case of a manufacturer of new marine SI engines or vessels for distribution in commerce, the sale, the offering for sale, or the introduction, or delivery for introduction, into commerce, of any new marine SI engine manufactured after the applicable effective date under this part unless such engine is covered by a certificate of conformity issued (and in effect) under regulations found in this part.

(ii) In the case of any person, except as provided by regulation of the Administrator, the importation into the United States of any new marine SI engine manufactured after the applicable effective date under this part unless such engine is covered by a certificate of conformity issued (and in effect) under regulations found in this part.

(2)(i) For a person to fail or refuse to permit access to or copying of records or to fail to make reports or provide information required under § 91.1104.

(ii) For a person to fail or refuse to permit entry, testing or inspection authorized under § 91.118, 91.505 or 91.1104.

(iii) For a person to fail or refuse to perform tests, or to have tests performed as required under § 91.118 or § 91.1104.

(iv) For a person to fail to establish or maintain records as required under § 91.1104.

(3)(i) For a person to remove or render inoperative a device or element of design installed on or in a marine engine in compliance with regulations under this part prior to its sale and delivery to the ultimate purchaser, or for a person knowingly to remove or render inoperative such a device or element of design after the sale and delivery to the ultimate purchaser; or

(ii) For a person to manufacture, sell or offer to sell, or install, a part or component intended for use with, or as part of, a marine SI engine, where a principal effect of the part or component is to bypass, defeat, or render inoperative a device or element of design installed on or in a marine SI engine in compliance with regulations issued under this part, and where the person knows or should know that the part or component is being offered for sale or installed for this use or put to such use.

(4) For a manufacturer of a new marine SI engine subject to standards prescribed under this part:

(i) To sell, offer for sale, or introduce or deliver into commerce, a marine SI engine unless the manufacturer has complied with the requirements of § 91.1203.

(ii) To sell, offer for sale, or introduce or deliver into commerce, a marine SI engine unless a label or tag is affixed to the engine in accordance with regulations under this part.

(iii) To provide directly or indirectly in any communication to the ultimate purchaser or a subsequent purchaser that the coverage of a warranty under the Act is conditioned upon use of a part, component, or system manufactured by the manufacturer or a person acting for the manufacturer or under its control, or conditioned upon service performed by such persons, except as provided in subpart M of this part.

(iv) To fail or refuse to comply with the terms and conditions of the warranty under subpart M of this part.

(5) For a manufacturer of new marine vessels or equipment to distribute in commerce, sell, offer for sale, or introduce into commerce, marine vessels or equipment which contain an engine not covered by a certificate of conformity.

(b) For the purposes of enforcement of this part, the following apply:

(1) Nothing in paragraph (a) of this section is to be construed to require the use of manufacturer parts in maintaining or repairing a marine SI engine.

(2) Actions for the purpose of repair or replacement of a device or element of design or any other item are not

considered prohibited acts under § 91.1103(a) if the actions are a necessary and temporary procedure, the device or element is replaced upon completion of the procedure, and the action results in the proper functioning of the device or element of design.

(3) Actions for the purpose of a conversion of a marine SI engine for use of a clean alternative fuel (as defined in Title II of the Act) are not considered prohibited acts under § 91.1103(a) if:

(i) The engine complies with the applicable standard when operating on the alternative fuel, and the device or element is replaced upon completion of the conversion procedure, and

(ii) In the case of engines converted to dual fuel or flexible use, the action results in proper functioning of the device or element when the marine SI engine operates on conventional fuel.

§ 91.1104 General enforcement provisions.

(a) *Information collection provisions.* (1) Every manufacturer of new marine SI engines and other persons subject to the requirements of this part must establish and maintain records, perform tests where such testing is not otherwise reasonably available under this part, make reports and provide information the Administrator may reasonably require to determine whether the manufacturer or other person has acted or is acting in compliance with this part or to otherwise carry out the provisions of this part, and must, upon request of an officer or employee duly designated by the Administrator, permit the officer or employee at reasonable times to have access to and copy such records.

(2) For purposes of enforcement of this part, an officer or employee duly designated by the Administrator, upon presenting appropriate credentials, is authorized:

(i) To enter, at reasonable times, any establishment of the manufacturer, or of any person whom the manufacturer engaged to perform any activity required under paragraph (a)(1) of this section, for the purposes of inspecting or observing any activity conducted pursuant to paragraph (a)(1) of this section, and

(ii) To inspect records, files, papers, processes, controls, and facilities used in performing an activity required by paragraph (a)(1) of this section, by the manufacturer or by a person whom the manufacturer engaged to perform the activity.

(b) *Exemption provision.* The Administrator may exempt a new marine engine from compliance with § 91.1103 upon such terms and conditions as the Administrator may find necessary for the purpose of export, research, investigations, studies, demonstrations, or training, or for reasons of national security.

(c) *Importation provision.* (1) A new marine SI engine, or vessel offered for importation or imported by a person in violation of § 91.1103 shall be refused admission into the United States, but the Secretary of the Treasury and the Administrator may, by joint regulation, provide for deferring a final determination as to admission and authorizing the delivery of such a marine SI engine offered for import to the owner or consignee thereof upon such terms and conditions (including the furnishing of a bond) as may appear to them appropriate to insure that the marine SI engine will be brought into conformity with the standards, requirements, and limitations applicable to it under this part.

(2) If a marine SI engine is finally refused admission under this paragraph, the Secretary of the Treasury shall cause disposition thereof in accordance with the customs laws unless it is exported, under regulations prescribed by the Secretary, within 90 days of the date of notice of the refusal or additional time as may be permitted pursuant to the regulations.

(3) Disposition in accordance with the customs laws may not be made in such manner as may result, directly or indirectly, in the sale, to the ultimate consumer, of a new marine SI engine that fails to comply with applicable standards of the Administrator under this part.

(d) *Export provision.* A new marine SI engine intended solely for export, and so labeled or tagged on the outside of the container and on the engine itself, shall be subject to the provisions of § 91.1103, except that if the country that is to receive the engine has emission standards that differ from the standards prescribed under subpart B of this part, then the engine must comply with the standards of the country that is to receive the engine.

§ 91.1105 Injunction proceedings for prohibited acts.

(a) The district courts of the United States have jurisdiction to restrain violations of § 91.1103.

(b) Actions to restrain such violations must be brought by and in the name of the United States. In an action, subpoenas for witnesses who are required to attend a district court in any district may run into any other district.

§ 91.1106 Penalties.

(a) *Violations.* A violation of the requirements of this subpart is a violation of the applicable provisions of the Act, including sections 203 and 213(d), and is subject to the penalty provisions thereunder.

(1) A person who violates § 91.1103 (a)(1), (a)(4), or (a)(5), or a manufacturer or dealer who violates § 91.1103(a)(3)(i), is subject to a civil penalty of not more than $25,000 for each violation.

(2) A person other than a manufacturer or dealer who violates § 91.1103(a)(3)(i) or any person who violates § 91.1103(a)(3)(ii) is subject to a civil penalty of not more than $2,500 for each violation.

(3) A violation with respect to § 91.1103 (a)(1), (a)(3)(i), (a)(4), or (a)(5) constitutes a separate offense with respect to each marine SI engine.

(4) A violation with respect to § 91.1103(a)(3)(ii) constitutes a separate offense with respect to each part or component. Each day of a violation with respect to § 91.1103(a)(6) constitutes a separate offense.

(5) A person who violates § 91.1103 (a)(2) or (a)(6) is subject to a civil penalty of not more than $25,000 per day of violation.

(b) *Civil actions.* The Administrator may commence a civil action to assess and recover any civil penalty under paragraph (a) of this section.

(1) An action under this paragraph may be brought in the district court of the United States for the district in which the violation is alleged to have occurred or in which the defendant resides or has the Administrator's principal place of business, and the court shall have jurisdiction to assess a civil penalty.

(2) In determining the amount of a civil penalty to be assessed under this paragraph, the court is to take into account the gravity of the violation, the economic benefit or savings (if any) resulting from the violation, the size of the violator's business, the violator's history of compliance with Title II of the Act, action taken to remedy the violation, the effect of the penalty on the violator's ability to continue in business, and such other matters as justice may require.

(3) In any such action, subpoenas for witnesses who are required to attend a district court in any district may run into any other district.

(c) *Administrative assessment of certain penalties.*—(1) *Administrative penalty authority.* In lieu of commencing a civil action under paragraph (b) of this section, the Administrator shall assess any civil penalty prescribed in paragraph (a) of this section, except that the maximum amount of penalty sought against each violator in a penalty assessment proceeding can not exceed $200,000,

unless the Administrator and the Attorney General jointly determine that a matter involving a larger penalty amount is appropriate for administrative penalty assessment. Any such determination by the Administrator and the Attorney General is not subject to judicial review. Assessment of a civil penalty is made by an order made on the record after opportunity for a hearing held in accordance with the procedures found at part 22 of this chapter. The Administrator may compromise, or remit, with or without conditions, any administrative penalty which may be imposed under this section.

(2) *Determining amount.* In determining the amount of any civil penalty assessed under this subsection, the Administrator is to take into account the gravity of the violation, the economic benefit or savings (if any) resulting from the violation, the size of the violator's business, the violator's history of compliance with Title II of the Act, action taken to remedy the violation, the effect of the penalty on the violator's ability to continue in business, and such other matters as justice may require.

(3) Effect of administrator's action. (i) Action by the Administrator under this paragraph does not affect or limit the Administrator's authority to enforce any provisions of this part; except that any violation with respect to which the Administrator has commenced and is diligently prosecuting an action under this part, or for which the Administrator has issued a final order not subject to further judicial review and for which the violator has paid a penalty assessment under this part may not be the subject of a civil penalty action under paragraph (b) of this section.

(ii) No action by the Administrator under this part affects a person's obligation to comply with a section of this part.

(4) *Finality of order.* An order issued under this subsection is to become final 30 days after its issuance unless a petition for judicial review is filed under paragraph (c)(5) of this section.

(5) *Judicial review.* (i) A person against whom a civil penalty is assessed in accordance with this subsection may seek review of the assessment in the United States District Court for the District of Columbia or for the district in which the violation is alleged to have occurred, in which such person resides, or where the person's principle place of business is located, within the 30-day period beginning on the date a civil penalty order is issued. The person must simultaneously send a copy of the filing by certified mail to the Administrator and the Attorney General.

(ii) The Administrator must file in the court within 30 days a certified copy, or certified index, as appropriate, of the record on which the order was issued. The court is not to set aside or remand any order issued in accordance with the requirements of this paragraph unless substantial evidence does not exist in the record, taken as a whole, to support the finding of a violation or unless the Administrator's assessment of the penalty constitutes an abuse of discretion, and the court is not to impose additional civil penalties unless the Administrator's assessment of the penalty constitutes an abuse of discretion. In any proceedings, the United States may seek to recover civil penalties assessed under this section.

(6) *Collection.* (i) If any person fails to pay an assessment of a civil penalty imposed by the Administrator as provided in this part after the order making the assessment has become final or after a court in an action brought under paragraph (c)(5) of this section has entered a final judgment in favor of the Administrator, the Administrator is to request that the Attorney General bring a civil action in an appropriate district court to recover the amount assessed (plus interest at rates established pursuant to section 6621(a)(2) of the Internal Revenue Code of 1986 from the date of the final order or the date of final judgment, as the case may be). In such an action, the validity, amount, and appropriateness of the penalty is not subject to review.

(ii) A person who fails to pay on a timely basis the amount of an assessment of a civil penalty as described in paragraph (c)(6)(i) of this section is required to pay, in addition to that amount and interest, the United States' enforcement expenses, including attorney's fees and costs for collection proceedings, and a quarterly nonpayment penalty for each quarter during which the failure to pay persists. The nonpayment penalty is an amount equal to 10 percent of the aggregate amount of that person's penalties and nonpayment penalties which are unpaid as of the beginning of such quarter.

§ 91.1107 Warranty provisions.

(a) The manufacturer of each marine SI engine must warrant to the ultimate purchaser and each subsequent purchaser that the engine is designed, built, and equipped so as to conform at the time of sale with applicable regulations under section 213 of the Act, and is free from defects in materials and workmanship which cause such engine to fail to conform with applicable regulations for its warranty period (as determined under § 91.1203).

(b) In the case of an engine part, the manufacturer or rebuilder of the part may certify according to § 85.2112 of this chapter that use of the part will not result in a failure of the engine to comply with emission standards promulgated in this part.

(c) For the purposes of this section, the owner of any engine warranted under this part is responsible for the proper maintenance of the engine. Proper maintenance includes replacement and service, at the owner's expense at a service establishment or facility of the owner's choosing, such items as spark plugs, points, condensers, and any other part, item, or device related to emission control (but not designed for emission control) under the terms of the last sentence of section 207(a)(3) of the Act, unless such part, item, or device is covered by any warranty not mandated by this Act.

§ 91.1108 In-use compliance provisions.

(a) Effective with respect to marine engine and vessels manufactured during model years 1997 and after:

(1) If the Administrator determines that a substantial number of any class or category of engines, although properly maintained and used, do not conform to the regulations prescribed under section 213 of the Act when in actual use throughout their useful life (as defined under § 91.105(a)), the Administrator shall immediately notify the manufacturer of such nonconformity and require the manufacturer to submit a plan for remedying the nonconformity of the engines with respect to which such notification is given.

(i) The manufacturer's plan shall provide that the nonconformity of any such engines which are properly used and maintained will be remedied at the expense of the manufacturer.

(ii) If the manufacturer disagrees with such determination of nonconformity and so advises the Administrator, the Administrator shall afford the manufacturer and other interested persons an opportunity to present their views and evidence in support thereof at a public hearing. Unless, as a result of such hearing, the Administrator withdraws such determination of nonconformity, the Administrator shall, within 60 days after the completion of such hearing, order the manufacturer to provide prompt notification of such nonconformity in accordance with paragraph (a)(2) of this section. The manufacturer shall comply in all respects with the requirements of subpart I of this part.

(2) Any notification required to be given by the manufacturer under paragraph (a)(1) of this section with respect to any class or category of engines shall be given to dealers, ultimate purchasers, and subsequent purchasers (if known) in such manner and containing such information as required in subparts I and J of this part.

(3)(i) The manufacturer shall furnish with each new engine written instructions for the proper maintenance and use of the engine by the ultimate purchaser as required under § 91.1204. The manufacturer shall provide in boldface type on the first page of the written maintenance instructions notice that maintenance, replacement, or repair of the emission control devices and systems may be performed by any engine repair establishment or individual using any engine part which has been certified as provided in § 91.1107(b).

(ii) The instruction under paragraph (a)(3)(i) of this section must not include any condition on the ultimate purchaser's using, in connection with such engine, any component or service (other than a component or service provided without charge under the terms of the purchase agreement) which is identified by brand, trade, or corporate name. Subject instructions also must not directly or indirectly distinguish between service performed by the franchised dealers of such manufacturer, or any other service establishments with which such manufacturer has a commercial relationship, and service performed by independent engine repair facilities with which such manufacturer has no commercial relationship.

(iii) The prohibition of paragraph (a)(3)(ii) of this section may be waived by the Administrator if:

(A) The manufacturer satisfies the Administrator that the engine will function properly only if the component or service so identified is used in connection with such engine, and

(B) The Administrator finds that such a waiver is in the public interest.

(iv) In addition, the manufacturer shall indicate by means of a label or tag permanently affixed to the engine that the engine is covered by a certificate of conformity issued for the purpose of assuring achievement of emission standards prescribed under section 213 of the Act. This label or tag shall also contain information relating to control of emissions as prescribed under § 91.113.

(b) The manufacturer bears all cost obligation a dealer incurs as a result of a requirement imposed by paragraph (a) of this section. The transfer of any such cost obligation from a manufacturer to a dealer through franchise or other agreement is prohibited.

(c) If a manufacturer includes in an advertisement a statement respecting the cost or value of emission control devices or systems, the manufacturer shall set forth in the statement the cost or value attributed to these devices or systems by the Secretary of Labor (through the Bureau of Labor Statistics). The Secretary of Labor, and his or her representatives, has the same access for this purpose to the books, documents, papers, and records of a manufacturer as the Comptroller General has to those of a recipient of assistance for purposes of section 311 of the Act.

(d) Any inspection of a engine for purposes of paragraph (a)(1) of this section, after its sale to the ultimate purchaser, is to be made only if the owner of such vehicle or engine voluntarily permits such inspection to be made, except as may be provided by any state or local inspection program.

Subpart M—Emission Warranty and Maintenance Instructions

§ 91.1201 Applicability.

The requirements of this subpart M are applicable to all engines subject to the provisions of subpart A of this part 91.

§ 91.1202 Definitions.

The definitions of subpart A of this part apply to this subpart.

§ 91.1203 Emission warranty, warranty period.

(a) Warranties imposed by this subpart shall be phased in according to the following schedule.

(1) For model years 1998–2000, and for MY 1997 engine families certified pursuant to § 91.205, all emission related components shall be warranted for a period of one year of engine use.

(2) For model years 2001–2003:

(i) Emission related components shall be warranted for a period of one year of engine use.

(ii) Specified major emission control components shall be warranted for a period of three years or 200 hours of engine use, whichever occurs first.

(3) For model years 2004 and beyond:

(i) Emission-related components shall be warranted for a period of two years or 200 hours of engine use, whichever occurs first.

(ii) Specified major emission control components shall be warranted for a period of three years or 200 hours of engine use, whichever occurs first.

(b) The manufacturer of each new marine SI engine must warrant to the ultimate purchaser and each subsequent purchaser, that the engine is designed, built, and equipped so as to conform at the time of sale with applicable regulations under section 213 of the Act, and the engine is free from defects in materials and workmanship which cause such engine to fail to conform with applicable regulations for its warranty period.

(c) In the case of a marine SI engine part, the manufacturer or rebuilder of the part may certify according to § 85.2112 ot this chapter that use of the part will not result in a failure of the engine to comply with emission standards promulgated in this part.

(d) For the purposes of this section, the owner of any marine SI engine warranted under this part is responsible for the proper maintenance of the engine as stated in the manufacturer's written instructions. Proper maintenance generally includes replacement and service, at the owner's expense at a service establishment or facility of the owner's choosing, such items as spark plugs, points, condensers, and any other part, item, or device related to emission control (but not designed for emission control) under the terms of the last sentence of section 207(a)(3) of the Act, unless such part, item, or device is covered by any warranty not mandated by this Act.

§ 91.1204 Furnishing of maintenance and use instructions to ultimate purchaser.

(a) The manufacturer must furnish or cause to be furnished to the ultimate purchaser of each new marine SI engine written instructions for the maintenance and use needed to assure proper functioning of the emission control system.

(b) The manufacturer must provide in boldface type on the first page of the written maintenance instructions notice that maintenance, replacement, or repair of the emission control devices and systems may be performed by any marine SI engine repair establishment or individual.

(c) The instructions under paragraph (a) of this section will not include any condition on the ultimate purchaser's using, in connection with such engine, any component or service (other than a component or service provided without charge under the terms of the purchase agreement) which is identified by brand, trade, or corporate name. Such instructions also will not directly or indirectly distinguish between service performed by the franchised dealers of such manufacturer or any other service establishments with which such manufacturer has a commercial relationship and service performed by independent marine engine repair

facilities which such manufacturer has no commercial relationship.

(d) The prohibition of paragraph (c) of this section may be waived by the Administrator if:

(1) The manufacturer satisfies the Administrator that the engine will function properly only if the component or service so identified is used in connection with such engine, and

(2) The Administrator finds that such a waiver is in the public interest.

Subpart N—In-Use Credit Program for New Marine Engines

§ 91.1301 Applicability.

Marine SI engines subject to the provisions of subpart A of this part 91 are eligible to participate in the in-use credit program described in this subpart.

§ 91.1302 Definitions.

The definitions in subpart A of this part apply to this subpart. The following definitions shall also apply to this subpart:

Averaging means the exchange of marine engine in-use emission credits among engine families within a given manufacturer's product line.

Banking means the retention of marine engine in-use emission credits by the manufacturer generating the emission credits for use in future model year averaging or trading as permitted by these regulations.

Carry-over engine family means an engine family which undergoes certification using carryover test data from previous model years. See § 91.118(c).

Emission credits or in-use credits represent the amount of emission reduction or exceedance, for each regulated pollutant, by a marine engine family below or above, respectively, the applicable certification family emission limit (FEL) to which the engine family is certified. Emission reductions below the FEL are considered ''positive credits,'' while emission exceedances above the FEL are considered ''negative or required credits.''

Banked credits refer to positive emission credits based on actual applicable production/sales volume as contained in the end of model year in-use testing reports submitted to EPA. Some or all of these banked credits may be revoked if EPA review of the end of model year in-use testing reports or any subsequent audit action(s) uncovers problems or errors.

Trading means the exchange of marine SI engine in-use emission credits between manufacturers and/or brokers.

Compliance level for an engine family is determined by averaging the in-use test results from each engine.

§ 91.1303 General provisions.

(a) The in-use credit program for eligible marine engines is described in this subpart. Participation in this program is voluntary.

(b) A marine SI engine family is eligible to participate in the in-use credit program if it is subject to regulation under subpart B of this part with certain exceptions specified in paragraph (c) of this section.

(c) Marine SI engines may not participate in the in-use averaging, banking, and trading program if they are delivered to a ''point of first retail sale'' outside of the U.S., as defined in § 91.202.

(d) Credits generated and used in the marine engine certification averaging, banking, and trading program pursuant to the provisions of subpart C of this part are not interchangeable with credits generated and used in the marine engine in-use credit program.

(e) An engine family with a compliance level, as determined by in-use testing pursuant to subpart I of this part and paragraph (h) of this section, below the applicable FEL to which the engine family is certified may generate emission credits for averaging, banking, or trading in the in-use credit program.

(f) Positive credits generated in a given model year may be used in that model year and/or in any subsequent model year.

(g) A manufacturer of an engine family with a compliance level exceeding the applicable FEL to which the engine family is certified, may, prior to the date of the report required under paragraph (j) of this section use previously banked credits, purchase credits from another manufacturer, or perform additional testing pursuant to paragraph (i) of this section to address (as calculated elsewhere in this subpart) the associated credit deficit (negative credits or a need for credits).

(h) A manufacturer may carry-over an in-use credit deficit up to and including model year 2003. Beginning with model year 2004, all manufacturers must have a zero or positive credit balance.

(i) A manufacturer must notify EPA of plans to test additional engine families beyond the maximum 25% required in subpart I of this part for the in-use testing program. Such notice must be submitted 30 days prior to initiation of service accumulation. EPA may approve, with adequate justification, the use of an existing fleet for additional testing. If the additional testing discovers an engine family to be in noncompliance with the applicable FEL, the testing must be treated as if it were a failure of the normal in-use testing requirement of an engine family.

(j) Manufacturers must demonstrate a zero or positive credit balance under the in-use credit program for a particular model year within 90 days of the end of the in-use testing of that model year's engine families, or at the same time as the final certification AB&T report (required under § 91.210), whichever is later.

§ 91.1304 Averaging.

(a) A manufacturer may use averaging across engine families to demonstrate a zero or positive credit balance for a model year. Positive credits to be used in averaging may be obtained from credits generated by another engine family of the same model year, credits banked in previous model years, or credits obtained through trading.

(b) Beginning in model year 2004, credits used to demonstrate a zero or positive credit balance must be used at a rate of 1.1 to 1.

§ 91.1305 Banking.

(a) A manufacturer of a marine SI engine family with an in-use compliance level below the applicable FEL to which the engine family is certified for a given model year may bank positive in-use credits for that model year for use in in-use averaging and trading.

(b) A manufacturer may consider credits banked 30 days after the submission of the report required by § 91.1309(a). During the 30 day period EPA will work with the manufacturer to correct any error in calculating banked credits, if necessary.

§ 91.1306 Trading.

(a) A marine engine manufacturer may exchange positive in-use emission credits with other marine engine manufacturers through trading.

(b) In-use credits for trading can be obtained from credits banked for model years prior to the model year of the engine family requiring in-use credits.

(c) Traded in-use credits can be used for averaging, banking, or further trading transactions.

(d) Unless otherwise approved by EPA, a manufacturer that generates positive in-use credits must wait 30 days after it has both completed in-use testing for the model year for which the credits were generated and submitted the report required by § 91.1309(a) before it may transfer credits to another manufacturer or broker.

(e) In the event of a negative credit balance resulting from a transaction,

both the buyer and the seller are liable, except in cases involving fraud. Engine families participating in a negative trade may be subject to recall under subpart I of this part.

§ 91.1307 Credit calculation.

For each participating engine family, emission credits (positive or negative) are to be calculated according to the following equation and rounded, in accordance with ASTM E29–93a, to the nearest gram. ASTM E29–93a has been incorporated by reference. See § 91.6. Consistent units are to be used throughout the equation. The following equation is used to determine the credit status for an engine family whether generating positive or negative in-use emission credits:

$$\sum_{t=1}^{\text{max useful life}} \frac{S(t) \times \text{sales} \times (\text{FEL} - \text{CL}) \times \text{Power} \times \text{AF} \times 0.207 \times \mu_{\text{use}}}{1.03^{t}}$$

Where:

S(t)=cumulative fraction survived at time t;

μ_{life}=average useful life in years, specific to the power rating and the application as given below.

Engine type	(μ_{life})
Outboard	$41.27 \times \left(\frac{\text{Power}}{0.746}\right)^{-0.204}$
Personal Watercraft	10

Power=the average power of an engine family in kW (sales weighted). The power of each configuration is the rated output in kilowatts as determined by SAE J1228. This procedure has been incorporated by reference. See § 91.6.

t=time in model years

max useful life=maximum useful life specific to the power rating and the application; max useful life = $2\mu_{life}$

sales = the number of eligible sales tracked to the point of first retail sale in the U.S. for the given engine family during the model year.

FEL=the family emission limit for the engine family in grams per kilowatt hour.

CL=compliance level of the in-use testing in g/kW–hr.

μ_{use}=mean use in hours per year. For outboard engines, μ_{use}=34.8 hrs /yr. For personal watercraft, μ_{use}=77.3 hrs/yr;

AF=adjustment factor for the number of tests conducted

No. eng. tested	2*, 4	6	8	10
Adjustment factor	.5	.75	.9	1

* Small volume manufacturer

§ 91.1308 Maintenance of records.

(a) Any manufacturer that is participating in the in-use credit program set forth in this subpart shall establish, maintain, and retain the records required by § 91.209 with respect to its participation in the in-use credit program.

(b) EPA may void *ab initio* a certificate of conformity for an engine family for which the manufacturer fails to retain the records required under this section or to provide such information to the Administrator upon request.

§ 91.1309 Reporting requirements.

(a) Any manufacturer who participates in the in-use credit program is required to submit an end of the model year in-use testing report either within 90 days of the end of the model year in-use testing of a given model year's engine families, or at the same time as the final certification AB&T report (required under § 91.210), whichever is later. The end of the model year in-use testing report must contain the required information and show the calculated credits from all the in-use testing conducted by the manufacturer for a given model year.

(b) Reports shall be submitted to: Manager, Engine Compliance Programs Group 6403–J, U.S. Environmental Protection Agency, 401 M Street, SW., Washington, DC 20460.

(c) A manufacturer that fails to submit a timely report as required in paragraph (a) of this section will be considered to not have participated in the in-use credit program.

(d) If EPA or the manufacturer determines that a reporting error occurred on an end of model year report previously submitted to EPA under this subpart, or an engine family in-use testing report submitted to EPA under subpart I, the manufacturer's credits and credit calculations will be recalculated. Erroneous positive credits will be void. Erroneous negative credits may be adjusted by EPA. An update of previously submitted ''point of first retail sale'' information is not considered an error and no increase in the number of credits will be allowed unless an actual error occurred in the calculation of credits due to an error in the ''point of first retail sale'' information from the time of the original end of model year report.

§ 91.1310 Notice of opportunity for hearing.

Any voiding of an engine family's certificate of conformity under § 91.1308(b) of this subpart will occur only after the manufacturer concerned has been offered an opportunity for a hearing conducted in accordance with § § 91.512, 91.513, 91.514 and 91.515.

[FR Doc. 96–23063 Filed 10–3–96; 8:45 am]

BILLING CODE 6560–50–P

federal register

Thursday
October 4, 1996

Part III

Department of Education

Sexual Harassment Guidance: Harassment of Students by School Employees; Notice

DEPARTMENT OF EDUCATION

Office for Civil Rights Sexual Harassment Guidance: Harassment of Students by School Employees

ACTION: Request for comments.

SUMMARY: The Assistant Secretary for Civil Rights issues a draft document entitled ''Sexual Harassment Guidance: Harassment of Students by School Employees'' (Guidance).

The Guidance provides educational institutions with information regarding the standards used by the Office for Civil Rights (OCR) to investigate and resolve cases involving claims that sexual harassment of students by employees has created a hostile environment in violation of Title IX of the Education Amendments of 1972. Title IX prohibits gender discrimination in education programs that receive Federal financial assistance.

The Assistant Secretary solicits from all interested parties written comments on the clarity and completeness of the Guidance, which is appended to this notice as Appendix One.

DATES: Comments on the Guidance must be received on or before November 18, 1996.

ADDRESSES: All comments concerning the Guidance should be addressed to Howard I. Kallem, U.S. Department of Education, 600 Independence Avenue, S.W., Room 5414 Switzer Building, Washington, D.C. 20202–1174. Telephone: (202) 205–9641.

FOR FURTHER INFORMATION CONTACT: Howard I. Kallem. Telephone (202) 205–9641. Individuals who use a telecommunications device for the deaf (TDD) may call the TDD number at (202) 205–9683 or 1–800–421–3481. Internet: Howard __Kallem@ed.gov

SUPPLEMENTARY INFORMATION: The purpose of the Guidance is to inform educational institutions that receive Federal financial assistance regarding the standards that OCR follows, and that the institutions should follow, when investigating allegations that Title IX has been violated because of sexual harassment of students by employees. Consistent with the Supreme Court's decision in *Franklin* v. *Gwinnett County Public Schools,* 503 U.S. 60 (1992) (holding that a student may sue a school district for damages based on sexual harassment by a teacher), OCR has applied Title IX to prohibit sexual harassment of students by school employees. The standards in the Guidance reflect OCR's longstanding nationwide practice and reflect well established legal principles developed under Title VII of the Civil Rights Act of 1964, which prohibits gender discrimination in employment. The Department is accepting public comment on whether the Guidance in Appendix One is clear and complete.

On August 16, 1996, the Assistant Secretary published a notice in the Federal Register (61 FR 42728) announcing the availability, upon request, of a document entitled ''Sexual Harassment Guidance: Peer Sexual Harassment'' and invited comments on the document. A copy of the Peer Harassment Guidance is appended to this notice as Appendix Two for the convenience of the readers of the Guidance issued today.

Once the comments are assessed, OCR plans to publish a single document in the Federal Register combining the guidance found in Appendix One and Appendix Two.

Invitation to Comment

Interested persons are invited to submit comments and recommendations on the clarity and completeness of the Guidance in Appendix One.

All comments submitted in response to this notice will be available for public inspection, during and after the comment period, in Room 5414, 330 C Street, S.W., Washington, D.C., between the hours of 8:30 a.m. and 4:00 p.m., Monday through Friday of each week except Federal holidays.

Dated: September 27, 1996.

Norma V. Cantú,

Assistant Secretary for Civil Rights.

Appendix One—Sexual Harassment Guidance: Harassment of Students by School Employees

This guidance discusses the analysis that the Office for Civil Rights (OCR) follows, and that school districts, colleges, and other recipients of Federal funding (referred to in this guidance as ''schools'') should use, when investigating allegations of sexual harassment of students in a school's educational program by a school's employees.[1] This guidance is based on legal principles detailed in the endnotes accompanying the document.

This guidance supplements and should be read in conjunction with OCR's policy guidance: ''Sexual Harassment Guidance: Peer Harassment,'' issued for comment on August 16, 1996 (Peer Harassment Guidance). Many of the issues discussed in the Peer Harassment Guidance are applicable to investigations of alleged harassment of students by a school's employees. Additional issues related to sexual harassment by employees are discussed below.

Introduction

Under Title IX of the Education Amendments of 1972 (Title IX) and its implementing regulations, no individual may be discriminated against on the basis of sex in any education program or activity receiving Federal financial assistance.[2] Sexual harassment of students by a school employee is a form of prohibited sex discrimination in the following circumstances:[3]

Quid Pro Quo Harassment—A school employee explicitly or implicitly conditions a student's participation in an education program or school activity or bases an educational decision on the student's submission to unwelcome sexual advances, requests for sexual favors, or other verbal or physical conduct of a sexual nature.[4] *Quid pro quo* harassment is equally unlawful whether the student resists and suffers the threatened harm or submits and thus avoids the threatened harm.

Hostile Environment Harassment—Sexually harassing conduct by an employee (that can include unwelcome sexual advances, requests for sexual favors, and other verbal or physical conduct of a sexual nature[5]) is sufficiently severe, persistent, or pervasive to limit a student's ability to participate in or benefit from an education program or activity, or to create a hostile or abusive educational environment.[6]

As discussed in the Peer Harassment Guidance, Title IX's prohibition of sexual harassment does not extend to nonsexual touching or other nonsexual conduct. For example, a high school athletic coach hugging a student who made a goal or a kindergarten teacher's consoling hug for a child with a skinned knee will not be considered sexual harassment.[7] However, gender-based harassment—that is, acts of verbal or physical aggression, intimidation, or hostility based on sex but not involving sexual activity or language—is a form of discrimination prohibited by Title IX. Such incidents, combined with incidents of sexual harassment, could create a hostile environment, even if each by itself would not be sufficient.[8]

As noted previously, many of the principles set out in the Peer Harassment Guidance apply to sexual harassment of students by school employees. Those principles are not repeated in this document. In particular, the principles in that Guidance relating to the applicability of Title IX, notice and grievance procedures, and the recipient's response to and prevention of sexual harassment all apply to sexual harassment of students by school employees.

Liability of a School for Sexual Harassment by its Employees

A school's liability for sexual harassment by its employees is

determined by application of agency principles,[9] i.e., by principles governing the delegation of authority to or authorization of another person to act on one's behalf. Accordingly, a school will always be liable for even one instance of *quid pro quo* harassment by a school employee in a position of authority, such as a teacher or administrator, whether or not it knew, should have known, or approved of the harassment at issue.[10] Under agency principles if a teacher or other employee uses the authority he or she is given (e.g., to assign grades) to force a student to submit to sexual demands, the employee ''stands in the shoes'' of the school and the school will be responsible for the use of its authority by the employee/agent.[11]

A school will also be liable for hostile environment sexual harassment by its employees, i.e., for harassment that is sufficiently severe, persistent, or pervasive to limit a student's ability to participate in or benefit from the education program, or to create a hostile or abusive environment if the employee—(1) Acted with apparent authority (i.e., because of the school's conduct, the employee reasonably appears to be acting on behalf of the school, whether or not the employee acted with authority); [12] or (2) was aided in carrying out the sexual harassment of students by his or her position of authority with the institution.[13] For example, a school will be liable if a teacher abuses his or her delegated authority over a student to create a hostile environment, such as if the teacher explicitly or implicitly threatens to fail a student unless the student responds to his or her sexual advances, even though the teacher fails to carry out the threat.[14]

As this example illustrates, in many cases the line between *quid pro quo* and hostile environment discrimination will be blurred, and the employee's conduct may constitute both types of harassment. However, what is important is that the school is liable for that conduct under application of agency principles, regardless of whether it is labeled as *quid pro quo* or hostile environment harassment.

Whether other employees, such as a janitor or cafeteria worker, are in positions of authority—or whether it would be reasonable for the student to believe they are, even if not (i.e., apparent authority)—will depend on factors such as the authority actually given to the employee [15] (e.g., in some elementary schools, a cafeteria worker may have authority to impose discipline) and the age of the student (the younger the student, the more likely it is that he or she will consider any adult employee to be in a position of authority).

Even in situations not involving (i) *quid pro quo* harassment, (ii) creation of a hostile environment through an employee's apparent authority, or (iii) creation of a hostile environment in which the employee is aided in carrying out the sexual harassment by his or her position of authority, a school will be liable for sexual harassment of its students by its employees if the school has notice of the harassment (i.e., knew or should have known of the harassment) but failed to take immediate and appropriate steps to remedy it.[16] Determining when a school has notice of sexual harassment is discussed in the Peer Harassment Guidance.[17]

Finally, schools are required by the Title IX regulations to adopt and publish grievance procedures providing for prompt and equitable resolution of sex discrimination complaints, including complaints of sexual harassment, and to disseminate a policy against sex discrimination.[18] If a school fails to do so, it will be liable under Title IX for the lack of grievance procedures, regardless of whether sexual harassment occurred. In addition, if OCR determines that harassment occurred, the school may be in violation of Title IX as to the harassment, under the agency principles previously discussed, because a school's failure to implement effective policies and procedures against discrimination may create apparent authority for school employees to harass students.[19]

In all cases of alleged harassment by employees investigated by OCR, OCR will determine whether a school has taken immediate and appropriate steps reasonably calculated to end any harassment that has occurred, remedy its effects, and prevent harassment from occurring again. If the school has done so, OCR will consider the case against that school resolved and will take no further action. This is true in cases in which the school was in violation of Title IX,[20] as well as those in which there has been no violation of Federal law.[21]

Welcomeness

In order to be actionable as harassment, sexual conduct must be unwelcome. Issues regarding credibility determinations and whether conduct is in fact unwelcome, notwithstanding a student's acquiescence or failure to complain, are discussed in the Peer Harassment Guidance. Schools should be particularly concerned about this issue when the harasser is in a position of authority. For instance, because students may be encouraged to believe that a teacher has absolute authority over the operation of his or her classroom, a student may not object to a teacher's sexually harassing comments during class; [22] however, this does not necessarily mean that the conduct was welcome. Instead, the student may believe that any objections would be ineffective in stopping the harassment or may fear that by making objections he or she will be singled out for harassing comments or other retaliation.

In addition, OCR must consider particular issues of welcomeness if the alleged harassment relates to alleged ''consensual'' sexual relationships between adult employees of elementary and secondary schools and students in those schools. If elementary students are involved, welcomeness will not be an issue: OCR will never view sexual conduct between an adult school employee and an elementary school student as consensual. In cases involving secondary students, there will be a strong presumption that sexual conduct between an adult school employee and a student is not consensual. However, if that presumption is challenged for older secondary students, and for post-secondary students, OCR will consider a number of factors in determining whether sexual advances or other sexual conduct could be considered welcome:

—The nature of the conduct and the relationship of the school employee to the student, including the degree of influence (which could, at least in part, be affected by the student's age), authority, or control the employee has over the student.

—Whether the student was legally or practically unable to consent to the sexual conduct in question with an adult school employee. A student's age or disability would affect his or her ability to do so.[23]

Severe, Persistent, or Pervasive

Even a single instance of *quid pro quo* harassment is a violation of Title IX. In determining whether an employee's sexual harassment of a student created a hostile environment, i.e., whether it was sufficiently severe, persistent, or pervasive to limit a student's ability to participate in or benefit from the education program, or to create a hostile or abusive educational environment, OCR considers the factors discussed in the Peer Harassment Guidance.[24] An additional factor to consider if a student is harassed by a school employee is the identity and relationship of the individuals involved. For example, due to the power that a professor or teacher has over a student, sexually based conduct by that person toward a student

may be more likely to create a hostile environment than similar conduct by another student.[25]

Prompt and Equitable Grievance Procedures

Title IX's requirement that schools adopt and publish grievance procedures providing for prompt and equitable resolution of complaints of discrimination on the basis of sex is also applicable to complaints of harassment of students by a school's employees.[26] Thus, a school's grievance procedures must also apply to those complaints.

In addition, because it is possible that an employee designated to handle Title IX complaints may him or herself engage in harassment, it may be necessary for the school to designate more than one employee as responsible for handling these complaints in order to ensure that students have an effective means of reporting harassment.[27]

As in the case of students accused of harassment, a school's employees may have certain due process rights.[28] Procedures that ensure the Title IX rights of the complainant, while at the same time according due process rights to the parties involved, will lead to sound and supportable decisions. The rights established under Title IX must be interpreted consistently with any applicable federally guaranteed rights involved in a complaint. Schools should ensure that steps to accord due process rights do not obstruct or delay the protections provided by Title IX to the complainant.

Notice of Outcome and FERPA

As discussed in the Peer Harassment Guidance, the Title IX grievance process should provide for notice of the outcome and disposition of a complaint if doing so is consistent with a school's obligations under the Family Educational Rights and Privacy Act (FERPA) and its regulations.[29] FERPA generally prohibits a school from releasing personally identifiable information from a student's education record without the consent of the student (or his or her parents, if the student is a minor).[30] Thus, if the alleged harasser is a teacher, administrator, or other non-student employee, FERPA would not limit the school's ability to inform the complainant of any disciplinary action taken.

First Amendment

Just as with peer harassment, in cases of alleged harassment by employees, the protections of the First Amendment must be considered if issues of speech or expression are involved.[31] Title IX is intended to protect students from sex discrimination, not to regulate the content of speech. This is a particularly important consideration in classroom and related activities by teachers. Thus, in regulating the conduct of its faculty to prevent or respond to sexual harassment, a school must formulate, interpret, and apply its rules so as to protect free speech rights.[32]

Footnotes

1. The term ''employee'' refers to employees and agents of a school. This includes persons with whom the school contracts to provide services for the school. *See Brown* v. *Hot, Sexy, and Safer Productions, Inc.,* 68 F.3d 525 (1st Cir. 1995) (Title IX sexual harassment claim brought for school's role in permitting contract consultant hired by it to create allegedly hostile environment). In addition, while the standards contained in the Department's Peer Harassment Guidance are generally applicable to claims of student-on-student harassment, schools will be liable for the sexual harassment of one student by another student under the standards contained in this Guidance if a student engages in sexual harassment as an agent or employee of a school.

For instance, a school would be liable under the standards applicable to *quid pro quo* harassment if a student teaching assistant, who has been given authority to assign grades, requires a student in his or her class to submit to sexual advances in order to obtain a certain grade in the class. Finally, this Guidance does not address employee-on-employee sexual harassment, even though that conduct is prohibited by Title IX. If employees bring sexual harassment claims under Title IX, case law applicable to sexual harassment in the work place under Title VII of the Civil Rights Act of 1964, and Equal Employment Opportunity (EEOC) guidelines will apply. See 28 CFR 42.604 (Procedures for Complaints of Employment Discrimination Filed Against Recipients of Federal Financial Assistance).

2. 20 U.S.C. § 1681, *et seq.,* as amended; 34 CFR 106.31(b).

3. For over a decade, the Department has applied Title IX to prohibit sexual harassment. As in the Peer Harassment Guidance, the Department also applies many of the principles developed in the case law governing sexual harassment in the workplace, under Title VII, as appropriate to the educational context. Similarly, many of the principles applicable to racial harassment under Title VI of the Civil Rights Act of 1964 also apply to sexual harassment under Title IX. *See* Department's Notice of Investigative Guidance for Racial Harassment, 59 FR 11448 (1994).

4. *Alexander* v. *Yale University,* 459 F. Supp 1, 4 (D.Conn 1977), *aff'd,* 631 F.2d 178 (2nd Cir. 1980) (a claim that academic advancement was conditioned upon submission to sexual demands constitutes a claim of sex discrimination in education); *Kadiki* v. *Virginia Commonwealth University,* 892 F. Supp 746, 752 (E.D. Va. 1995) (reexamination in a course conditioned on college student's agreeing to be spanked should she not attain a certain grade may constitute *quid pro quo* harassment); *see also Karibian* v. *Columbia University,* 14 F.3d 773, 777–79 (2nd Cir. 1994) (Title VII case).

5. *See* Peer Harassment Guidance at n. 5 (describing conduct found to be of a sexual nature).

6. *Doe* v. *Petaluma City School Dist.,* 830 F. Supp. 1560, 1571–73 (N.D. Cal. 1993), *motion for reconsideration granted* (July 22, 1996) (reaffirming Title IX liability for peer harassment); *Moire* v. *Temple University School of Medicine,* 613 F. Supp. 1360, 1366 (E.D. Pa. 1985), *aff'd mem.,* 800 F.2d 1136 (3d Cir. 1986); *see also Meritor Savings Bank, FSB* v. *Vinson,* 477 U.S. 57, 67 (1986) (Title VII case).

7. *See also Shoreline School Dist.,* OCR Case No. 10–92–1002 (a teacher's patting student on arm, shoulder and back, and restraining the student when he was out of control, not conduct of a sexual nature); *Dartmouth Public Schools,* OCR Case No. 01–90–1058 (same as to contact between high school coach and students); *San Francisco State University,* OCR Case No. 09–94–2038 (same as to faculty advisor placing her arm around graduate student's shoulder in posing for a picture); *Analy Union High School Dist.,* OCR Case No. 09–92–1249 (same as to drama instructor who put his arms around both male and female students who confided in him).

8. *See* Peer Harassment Guidance at notes 9, 41, and 42 and accompanying text.

9. The Supreme Court has ruled that agency principles apply in determining an employer's liability under Title VII for the harassment of its employees by supervisors. *See Vinson,* 477 U.S. at 72. These principles would govern in Title IX cases involving employees who are harassed by their supervisors. *See* 28 CFR 42.604 (regulations providing for handling employment discrimination complaints by Federal agencies; requiring agencies to apply Title VII law where applicable). These same principles should govern the liability of educational institutions under Title IX for the harassment of students by teachers and other school employees in positions of authority. *See Franklin* v. *Gwinnett County Public Schools,* 503 U.S. 60, 75 (1992).

10. The Supreme Court in *Vinson* did not alter the standard developed in the lower Federal courts whereby an institution is absolutely liable for *quid pro quo* sexual harassment whether or not it knew, should have known, or approved of the harassment at issue. 477 U.S. at 70–71; *see also Lipsett* v. *University of Puerto Rico,* 864 F.2d 881, 901 (1st Cir. 1988); EEOC Notice N–915–050, March 1990, Policy Guidance on Current Issues of Sexual Harassment, at p. 21. This standard applies in the school context as well. *Kadiki,* 892 F. Supp. at 752 (for purposes of *quid pro quo* harassment of a student, professor is in similar position as work place supervisor).

11. *Kadiki,* 892 F. Supp. at 754–755; *cf. Martin* v. *Cavalier Hotel Corp.,* 48 F.3d 1343, 1351 n. 3 (4th Cir. 1995) (Title VII case); *Karibian,* 14 F.3d at 777–78; *Henson* v. *City of Dundee,* 682 F.2d 897, 910 (11th Cir. 1982) (Title VII case).

12. Restatement (Second) Agency § 219(2)(d); *Martin* v. *Cavalier Hotel Corp.*, 48 F.3d at 1352 (finding an employer liable under Title VII for its General Manager's sexual harassment of an employee where the Manager used his apparent authority to commit the harassment; the Manager was delegated the full authority to hire, fire, promote, and discipline employees and used the authority to accomplish the harassment; and company policy required employees to report harassment to the Manager with no other grievance process made available to them).

13. *See* Restatement (Second) of Agency § 219(2)(d); EEOC Policy Guidance on Current Issues of Sexual Harassment at p. 28; Karibian, 14 F.3d at 780; *Hirschfeld* v. *New Mexico Corrections Dept.*, 916 F.2d 572, 579 (10th Cir. 1990) (Title VII case); *Martin* v. *Cavalier Hotel Corp.*, 48 F.3d at 1352.

14. *Karibian*, 14 F.3d at 780 (employer would be liable for hostile environment harassment where allegations were that a supervisor coerced employee into a sexual relationship by, among other things, telling her she "'owed him' for all he was doing for her as her supervisor"); *Sparks* v. *Pilot Freight Carriers, Inc.*, 830 F.2d 1554, 1558–60) (11th Cir. 1987) (Title VII case holding employer liable for sexually hostile environment created by supervisor who repeatedly reminded the harassed employee that he could fire her if she did not comply with his sexual advances).

15. *Cf. Karibian*, 14 F.3d at 780.

16. *Id.*

17. *See* Peer Harassment Guidance at pp. 6–7.

18. 34 CFR 106.8(b).

19. EEOC Policy Guidance at p. 25 ("* * * in the absence of a strong, widely disseminated, and consistently enforced employer policy against sexual harassment, and an effective complaint procedure, employees could reasonably believe that a harassing supervisor's actions will be ignored, tolerated, or even condoned by upper management.").

20. If OCR finds a violation of Title IX, it will seek to obtain an agreement with the school to voluntarily correct the violation. The agreement will set out the specific steps the school will take and provide for monitoring by OCR to ensure that the school complies with the agreement.

21. However, schools should note that the Supreme Court has held that, should a student file a private lawsuit under Title IX, monetary damages are available as a remedy if there has been a violation of Title IX. *Franklin*, 503 U.S. at 76. Of course, a school's immediate and appropriate remedial actions are relevant in determining the extent and nature of the damages suffered by a plaintiff.

22. *See Leija* v. *Cantutillo Independent School Dist.*, 887 F. Supp. 947, 954 (N.D. Tex. 1993) ("young children, taught to respect their teachers and follow their teacher's request, often do not know what to do when abuse occurs").

23. Of course, nothing in Title IX would prohibit a school from implementing policies prohibiting sexual conduct or sexual relationships between students and adult employees.

24. These factors include the type, frequency, and duration of the conduct; the number of individuals involved; the age and sex of the individuals involved; the size of the school, the location of the incidents, and the context in which they occurred; any other incidents at the school; and any incidents of gender-based, but non-sexual harassment. Note that, as with peer harassment, a single instance of severe harassment may be sufficient to create a hostile environment. Peer Harassment Guidance at p. 5 and n.35; Racial Harassment Investigative Guidance at 11449; *Brock* v. *United States*, 64 F. 3d 1421, 1423 (9th Cir. 1995) (Title VII case); *Simon* v. *Morehouse Sch. of Medicine*, 908 F. Supp. 959, 969–970 (N.D. Ga. 1995) (Title VII case); *Al-Dabbagh* v. *Greenpeace, Inc.*, 873 F. Supp. 1105, 1111–12 (N.D. Ill. 1994) (Title VII case); *Watts* v. *N.Y.C. Police Dept.*, 724 F. Supp. 99 (S.D.N.Y. 1989) (Title VII case).

25. *Patricia H.*, 830 F. Supp. at 1297 ("grave disparity in age and power" between teacher and student contributed to the creation of a hostile environment); *Summerfield Schools*, OCR Case No. 15–92–1929 ("impact of the * * * remarks was heightened by the fact that the coach is an adult in a position of authority"); *cf. Doe* v. *Taylor I.S.D.*, 15 F.3d 443 (5th Cir. 1994), *cert. denied*,—U.S.—, 115 S.Ct. 70 (1994) (Sec. 1983 case; in finding that a sexual relationship between a high school teacher and a student was unlawful, court considered the influence that the teacher had over the student by virtue of his position of authority).

26. At the elementary and secondary level, this responsibility generally lies with the school district. At the post-secondary level, there may be a procedure for a particular campus or college or for an entire university system. Moreover, while a school is required to have a grievance procedure under which complaints of sex discrimination (including sexual harassment) can be filed, the same procedure may also be used to address other forms of discrimination.

27. *See Meritor*, 477 U.S. at 72–73.

28. These rights may be derived from the United States Constitution, State law, collective bargaining agreements, or institutional regulations and policies, such as faculty handbooks.

29. *See* 20 U.S.C. § 1232g; 34 CFR Part 99.

30. *Id.*

31. The First Amendment applies to entities and individuals that are State actors. The receipt of Federal funds by private schools does not directly subject those schools to the U.S. Constitution. *See Rendell-Baker* v. *Kohn*, 457 U.S. 830, 840 (1982). However, all actions taken by OCR must comport with First Amendment principles, even in cases involving private schools that are not directly subject to the First Amendment.

32. For an example of the application of First Amendment principles to alleged sexual harassment by a school employee, *see Silva* v. *University of New Hampshire*, 883 F. Supp. 293 (D.N.H. 1994) (finding that a university professor was wrongly disciplined when he was fired for using classroom examples that seemed sexual in nature to some students, based on an impermissibly subjective sexual harassment policy). *See also George Mason University*, OCR Case No. 03–94–2086 (law professor's use of a racially derogatory word, as part of an instructional hypothetical regarding verbal torts, did not constitute racial harassment); *Portland School Dist. 1J*, OCR Case No. 10–94–1117 (reading teacher's choice to substitute a less offensive term for a racial slur when reading an historical novel aloud in class constituted an academic decision on presentation of curriculum, not racial harassment).

Appendix Two—Sexual Harassment Guidance: Peer Harassment

This guidance discusses the analysis that the Office for Civil Rights (OCR) follows, and that recipients of Federal funding should use, when investigating allegations that sexual harassment of a student or students by another student or group of students (peer harassment) has created a hostile environment at an educational institutions that receive Federal financial assistance.[1] This guidance is based on existing legal principles, which are detailed in the endnotes accompanying the document.

Introduction

Under Title IX of the Education Amendments of 1972 (Title IX) and its implementing regulations, no individual may be discriminated against on the basis of sex in education programs receiving Federal financial assistance.[2] Peer sexual harassment is a form of prohibited sex discrimination where the harassing conduct creates a hostile environment.[3] *Thus, unwelcome sexual advances, requests for sexual favors, and other verbal or physical conduct of a sexual nature*[4] *constitutes sexual harassment when the conduct is sufficiently severe, persistent, or pervasive to limit a student's ability to participate in or benefit from the education program, or to create a hostile or abusive educational environment.*[5]

OCR finds a school to be in violation of Title IX for peer hostile environment sexual harassment where a school knows of but fails to remedy the harassment in its education programs or activities.[6] Title IX does not make a school responsible for the actions of the harassing students, but rather for its own discrimination in permitting the harassment to continue once the school has notice of it. A school will have notice of a hostile environment when it knew or should have known of the harassment.[7] Moreover, schools are required by the Title IX regulations to have grievance procedures through which students can complain of alleged sex discrimination by other students, including sexual harassment.[8]

It is important to recognize that Title IX's prohibition of sexual harassment does not extend to nonsexual touching

or other nonsexual conduct.[9] For example, one student's demonstration of a sports maneuver requiring contact with another student will not be considered sexual harassment.[10]

Finally, where the alleged harassment involves issues of speech or expression, a school's obligations may be affected by application of First Amendment principles.

These issues are discussed in more detail below.

Applicability of Title IX

Title IX applies to all public and private educational institutions that receive Federal funds, including elementary and secondary schools, school districts, proprietary schools, colleges and universities. This guidance uses the term ''schools'' to refer to all such institutions. The ''education program'' of a school includes all of the school's operations.[11] This means that Title IX protects students in connection with all of the academic, educational, extra-curricular, athletic, and other programs of the school, whether they take place in the facilities of the school, on a school bus, at a class or training program sponsored by the school at another location, or elsewhere.

Title IX protects any ''person'' from sex discrimination; accordingly both male and female students are protected from sexual harassment by their peers.[12] Moreover, Title IX prohibits sexual harassment regardless of the sex of the harasser, e.g., even where the harasser and the person being harassed are members of the same sex.[13] One example would be a campaign of sexually explicit graffiti directed at a particular girl by other girls.[14] Title IX does not, however, apply to discrimination on the basis of sexual orientation,[15] although such conduct may be prohibited by State or local laws.

Liability of a School for Peer Sexual Harassment

A school will be liable for the conduct of its students that creates a sexually hostile environment where (i) a hostile environment exists, (ii) the school knows (''has notice'') of the harassment, and (iii) the school fails to take immediate and appropriate steps to remedy it. Under such circumstances, a school's failure to respond to the existence of a hostile environment within its own programs or activities permits an atmosphere of sexual discrimination to permeate the educational program and results in discrimination prohibited by Title IX.[16]

For the same reason, a school will be liable for sexual harassing conduct of third parties, who are not themselves students at the school (e.g., members of a visiting athletic club), where the conduct creates a sexually hostile environment in the school's programs or activities, if the school has notice of the harassment but fails to take appropriate steps to remedy it.[17] In determining whether the school took appropriate measures to remedy the sexual harassment in these cases, OCR will consider the level of control that the school has over the alleged harasser.[18]

Welcomeness

In order to be actionable as harassment, sexual conduct must be unwelcome. Conduct is unwelcome when the student being harassed did not ''solicit or incite it'' and ''regarded the conduct as undesirable or offensive.'' [19] Mere acquiescence in the conduct or the failure to complain does not always mean that the conduct was welcome.[20] For example, a student may decide not to resist sexual advances of another student or may not file a complaint out of fear. In addition, a student may not object to a pattern of sexually demeaning comments directed at him or her by a group of students out of a concern that objections might cause the harassers to make more comments. The fact that a student may have accepted the conduct does not mean that he or she welcomed it.[21] Also, the fact that a student willingly participated in conduct on one occasion does not prevent him or her from indicating that the same conduct has become unwelcome on a subsequent occasion. On the other hand, where a student actively participates in sexual banter and discussions and gives no indication that he or she doesn't like it, then the evidence generally will not support a conclusion that the conduct was unwelcome.[22]

When younger children are involved, it may be necessary to determine the degree to which they are able to recognize that certain sexual conduct is conduct to which they can or should reasonably object and the degree to which they can articulate an objection. Accordingly, OCR will consider the age of the student, the nature of the conduct involved, and other relevant factors in determining whether a student had the capacity of welcoming sexual conduct.

If there is a dispute about whether the harassment occurred or whether it was welcome—in a case where it is appropriate to consider whether the conduct could be welcome—determinations should be made based on the totality of the circumstances. While this is not an exhaustive list, the following types of information may be helpful in resolving the dispute:

—Statements by any witnesses to the alleged incident.

—Evidence about the relative credibility of the allegedly harassed student and the alleged harasser. For example, the level of detail and consistency of each person's account should be compared in an attempt to determine who is telling the truth. Another way to assess credibility is to see if corroborative evidence is lacking where it should logically exist. However, the absence of witnesses may indicate only the unwillingness of others to step forward, perhaps due to fear of the harasser or a desire not to get involved.

—Evidence that the alleged harasser had been found to have harassed others may support the credibility of the student claiming harassment; conversely, the student's claim will be weakened if he or she had been found to have made false allegations against other individuals.

—Evidence of the allegedly harassed student's reaction or behavior immediately after the alleged harassment. For example, were there witnesses who saw the student immediately after the alleged incident who say that the student appeared to be upset?

—Evidence about whether the student claiming harassment filed a complaint or took other action to protest the conduct soon after the alleged incident occurred. However, failure to immediately complain may merely reflect a fear of retaliation or a fear that the complainant may not be believed rather than that the alleged harassment did not occur.

—Other contemporaneous evidence. For example, did the student claiming harassment write about the conduct, and his or her reaction to it, soon after it occurred (e.g., in a diary or letter)? Did the student tell others (friends, parents) about the conduct (and his or her reaction to it) soon after it occurred?

Severe, Persistent, or Pervasive

Peer sexual harassment is created when conduct of a sexual nature is sufficiently severe, persistent, or pervasive to limit a student's ability to participate in or benefit from the education program, or to create a hostile or abusive educational environment. In deciding whether conduct is sufficiently severe, persistent or pervasive, the conduct should be considered from both a subjective [23] and objective [24] perspective. In making this determination, all relevant circumstances should be considered: [25]

The degree to which the conduct affected one or more students' education. For a hostile environment to exist, the conduct must have limited the ability of a student to participate in or benefit from his or her education, or altered the conditions of the student's educational environment.[26]

—Many hostile environment cases involve tangible or obvious injuries.[27] For example

a student's grades may go down or the student may be forced to withdraw from school.[28] A student may also suffer physical injuries and mental or emotional distress.[29]

—However, a hostile environment may exist even where there is no tangible injury to the student.[30] For example, a student may have been able to keep up his or her grades and continue to attend school even though it was more difficult for him or her to do so.[31] A student may be able to remain on a sports team, despite feeling humiliated or angered by harassment that creates a hostile environment.[32] Harassing conduct in these examples alters the student's educational environment on the basis of sex.

—A hostile environment can occur even where the harassment is not targeted specifically at the individual complainant.[33] For example, where a student or group of students regularly directs sexual comments towards a particular student, a hostile environment may be created not only for the targeted student, but for others who witness the conduct.

The type, frequency and duration of the conduct. In most cases, a hostile environment will exist where there is a pattern or practice of harassment, or where the harassment is sustained and nontrivial.[34] For instance, where a young woman is taunted by one or more young men about her breasts and/or genital area, OCR may find that a hostile environment has been created, particularly where the conduct has gone on for some time, takes place throughout the school, or where the taunts are made by a number of students. The more severe the conduct, the less the need to show a repetitive series of incidents; this is particularly true when the harassment is physical. For instance, where the conduct is more severe, e.g., attempts to grab a female student's breasts, genital area, or buttocks, it need not be as persistent or pervasive in order to create a hostile environment. Indeed, a single or isolated incident of sexual harassment may, if sufficiently severe, create a hostile environment.[35] On the other hand, conduct that is not severe, persistent or pervasive will not create a hostile environment; e.g., a comment by one student to another student that she has a nice figure. Indeed, depending on the circumstances this may not even be conduct of a sexual nature.[36] Similarly, because students date one another, a request for a date or a gift of flowers, even if unwelcome, would not create a hostile environment, However, where it is clear that the conduct is unwelcome, repeated requests for dates or attempts to make contact could create a hostile environment.

The number of individuals involved. For example, sexual harassment may be committed by an individual or a group. In some cases, verbal comments or other conduct from one person might not be sufficient to create a hostile environment, but could be if done by a group. Similarly, while harassment can be directed towards an individual or a group,[37] the effect of the conduct towards a group may vary, depending on the type of conduct and the context. For certain types of conduct, there may be ''safety in numbers.'' For example, following an individual student and making sexual taunts to him or her may be very intimidating to that student but, in certain circumstances, less so to a group of students. On the other hand, persistent unwelcome sexual conduct still may create a hostile environment when directed towards a group.

The age and sex of the alleged harasser and the subject(s) of the harassment. For example, in the case of younger students, sexually harassing conduct may be more intimidating when coming from an older student.[38]

The size of the school, location of the incidents, and context in which they occurred. Depending on the circumstances of a particular case, fewer incidents may have a greater effect at a small college than at a large university campus. Harassing conduct occurring on a school bus may be more intimidating than similar conduct on a school playground because the restricted area makes it impossible for the students to avoid their harassers.[39] Harassing conduct in a personal or secluded area such as a dormitory room or residence hall can also have a greater effect (e.g., be seen as more threatening) than would similar conduct in a more public area. On the other hand, harassing conduct in a public place may be more humiliating. Each incident must be judged individually.

Other incidents at the school. A series of instances at the school, not involving the same students, could—taken together—create a hostile environment, even if each by itself would not be sufficient.[40]

Incidents of gender-based, but non-sexual harassment. Acts of verbal or physical aggression, intimidation, or hostility based on sex, but not involving sexual activity or language, is a form of discrimination and is unlawful if it is ''sufficiently patterned or pervasive'' and directed at individuals because of their sex.[41] Such incidents, combined with incidents of sexual harassment, could create a hostile environment, even if each by itself would not be sufficient.[42]

Notice and Grievance Procedures

A school will be in violation of Title IX for peer sexual harassment occurring in its programs or activities if the school ''has notice'' of a sexually hostile environment and fails to take immediate and appropriate corrective action. A school will have notice when it actually ''knew, or in the exercise of reasonable care, should have known'' about the harassment. In addition, so long as an agent or responsible employee of the recipient received notice, that notice will be imputed to the recipient.

A recipient can receive notice in many different ways. Because schools are required to have Title IX grievance procedures, a student may have filed a grievance or complained to a teacher about fellow students sexually harassing him or her. A student, parent, or other individual may have contacted other appropriate personnel, such as a principal, campus security, bus driver, teacher, an affirmative action officer, or staff in the office of student affairs. An agent or responsible employee of the institution may have witnessed the harassment. The recipient may receive notice in an indirect manner, from sources such as a member of the school staff, a member of the educational or local community, or the media. The recipient also may have received notice from flyers about the incident(s) posted around the school.[43]

Constructive notice exists when the school ''should have'' known about the harassment—when the school would have found out about the harassment through a ''reasonably diligent inquiry.''[44] For example, where a school knows of some incidents of harassment, there may be situations where it will be charged with notice of others—where the known incidents should have triggered an investigation that would have led to a discovery of the additional incidents. In other cases, the pervasiveness of the harassment may be enough to conclude that the school should have known of the hostile environment—where the harassment is widespread, openly practiced, or well-known to students and staff (such as sexual harassment occurring in hallways, graffiti in public areas, or harassment occurring during recess under a teacher's supervision).[45]

Schools are required by the Title IX regulations to adopt and publish grievance procedures providing for prompt and equitable resolution of sex discrimination complaints, including complaints of sexual harassment, and to disseminate a policy against sex discrimination.[46] These procedures provide a school with a mechanism for

discovering sexual harassment as early as possible and for effectively correcting problems, as required by Title IX. By having accessible, effective, and fairly applied grievance procedures (*see* discussion below), a school is telling its students that it does not tolerate sexual harassment and that students can report it without fear of adverse consequences.

Accordingly, where a school has failed to provide this mechanism for notice of and resolving complaints, it will be liable under Title IX for the lack of grievance procedures, regardless of whether sexual harassment occurred.[47] Moreover, in the absence of effective grievance procedures, if OCR determines that the alleged harassment was sufficiently severe, persistent or pervasive to create a hostile environment, a school will be in violation of Title IX as to the existence of a hostile environment, even if the school was not aware of the harassment and thus failed to remedy it.[48]

In addition, where a school otherwise has actual or constructive notice of a hostile environment (as discussed above), and fails to remedy the harassment, then OCR will find a violation even if the student fails to use the school's existing grievance procedures.

Title IX does not require a school to adopt a policy specifically prohibiting sexual harassment or to provide separate grievance procedures for sexual harassment complaints. However, as discussed in more detail below, Title IX grievance procedures must provide an effective means for responding to alleged sex discrimination at the school. Thus, where, because of the lack of a policy or procedures specifically addressing sexual harassment, students are unaware of what constitutes sexual harassment, or that such conduct is prohibited sex discrimination, OCR will not consider the school's general policy and procedures relating to sex discrimination complaints to be effective.[49]

Recipient's Response

What constitutes a reasonable response to information about possible sexual harassment will differ. Where a student, parent, or other individual has filed a complaint or otherwise reported incidents of harassment, the school must investigate and determine appropriate steps to resolve the situation.[50] Where information about possible harassment is less direct, the school's response to the information may vary depending upon factors such as: the source and nature of the information; the seriousness of the alleged harassment; whether any individuals can be identified who were subjected to the harassment, and their age; whether those individuals want to pursue the matter; whether there have been other complaints or reports of harassment by the alleged harasser; the specificity of the information; and the objectivity and credibility of the source of the report. It may be appropriate for a school to take interim measures. For instance, where a student alleges that she has been sexually assaulted by another student, it may be appropriate for the school to immediately separate the two students pending the results of the school's investigation.

Where a school determines that sexual harassment has occurred, it should take reasonable, timely and effective corrective action, including steps tailored to the specific situation.[51] As discussed above, where the harasser is not a student of the recipient, OCR will consider the level of control the school has over the harasser in determining what response would be appropriate.

First, appropriate steps should be taken to end the harassment. For example, a school may need to counsel, warn or even take disciplinary action against the harasser, based on the severity of the harassment and/or any record of prior incidents.[52] In some cases, it may be appropriate to separate the harassed student and the harasser, e.g., by changing housing arrangements[53] or directing the student harasser to have no further contact with the harassed student. It may also be appropriate to direct the harasser to apologize to the harassed student. Counseling for the harasser may be appropriate, as to what constitutes harassment and the effects it can have.

In addition, corrective action should address the effects on those who have been subject to harassment. For example, if a student was forced to withdraw from a class because of harassment from fellow students, he or she should be given the opportunity to take the class again. In some instances, a school may be required to provide or reimburse the student for professional counseling or other services necessary to address the effects of the harassment on the person subjected to it.[54]

Finally, a school should take steps to prevent any further harassment.[55] At a minimum, this includes making sure that the harassed students and their parents know how to report any further problems and making follow-up inquiries to see if there have been any further incidents or any retaliation. In addition, depending on how widespread the harassment was and whether there had been any prior incidents, the school may need to provide training for the larger educational community to prevent any future incidents and ensure that students, parents, and teachers can recognize any that do occur and know how to respond.[56] A school must always ensure that there is no retaliation against a student for raising a sexual harassment complaint.

Where a student reporting harassment asks that his or her name not be disclosed, or even that nothing be done about the alleged harassment, the school should try to determine whether the student is afraid of reprisals from the alleged harasser, and inform the student that Title IX prohibits this sort of retaliation and that the school will take strong responsive steps if it occurs. The school must then takes steps to ensure that no retaliation occurs.

Should the student continue to ask for confidentiality, the school should take all possible steps to investigate and respond to the complaint consistent with that request. While confidentiality may limit the school's ability to fully respond to the complaint—for example, the school may not be able to find out the alleged harasser's version of events without at least indirectly revealing the complainant's name—the school may still be able to take steps to address the harassment. For example, the school may be able to counsel the student or provide general training about sexual harassment to the school or portion of the school where the problem was raised. In addition, by investigating the complaint to the extent possible—including by reporting it to the Title IX coordinator or other responsible school employee designated pursuant to Title IX—the school may learn about or be able to confirm a pattern of harassment based on claims by different students that they were harassed by the same individual.

Prevention

Adopting and publicizing a policy specifically prohibiting sexual harassment and having separate grievance procedures available for violations of that policy can help ensure that all students and employees understand the nature of sexual harassment and that the school will not tolerate it. Indeed, they might even bring conduct of a sexual nature to the school's attention so that the school can address it *before* it becomes sufficiently severe, persistent or pervasive to create a hostile environment. Further, a school can provide training to administrators, teachers, and staff, and age-appropriate classroom information to students, to ensure that they understand what types

of conduct can cause sexual harassment and that they know how to respond.

Prompt and Equitable Grievance Procedures

Schools are required to adopt and publish grievance procedures providing for prompt and equitable resolution of complaints of discrimination on the basis of sex.[57] In the context of peer harassment, OCR has examined a number of elements in determining whether a school's grievance procedures are prompt and equitable, including whether the procedures provide for:

(1) Notice of the procedure to students, parents, and employees;

(2) Application of the procedure to complaints alleging harassment by students;

(3) Adequate and reliable investigation of complaints by an impartial investigator, including the opportunity to present witnesses and other evidence;

(4) Designated time frames for the major stages of the complaint process;

(5) Notice to the parties of the disposition of the complaint;

(6) Steps to prevent recurrence of any harassment and to correct its effects on the complainant and others.

In addition, many schools also provide an opportunity to appeal the findings and/or remedy. Procedures adopted by schools will vary considerably in specificity and components, reflecting different audiences, sizes, administrative structures, state or local legal requirements, and past experience. In addition, whether procedures are timely will vary depending on the complexity and severity of the harassment.

A grievance procedure applicable to peer sexual harassment complaints cannot be prompt or equitable unless students know it exists, how it works, and how to file a complaint. Thus, the procedures should be written in language appropriate to the age of the school's students, easily understood and widely disseminated. Distributing the procedures to administrators, or putting them in the school's administrative or policy manual, may not be an effective way of providing notice, as these publications are usually not widely circulated to and understood by all members of the school community. Many schools ensure adequate notice to students by: having copies of the procedures available at various locations throughout the school or campus; publishing the procedures as a separate document; including a summary of the process in *all* major publications issued by the school (handbooks or catalogs for students, parents, faculty, staff); and identifying individuals who can explain how the procedure works.

A college or school district must designate at least one employee to coordinate its efforts to comply with and carry out its Title IX responsibilities.[58] The school must notify all of its students and employees of the name, office address and telephone number of the employee(s) designated.[59] While a school may choose to have a number of employees responsible for Title IX matters, it is advisable to give one official responsibility for overall coordination and oversight of all sexual harassment complaints to ensure consistent practices and standards in the handling of all complaints. Coordination in terms of recordkeeping is also essential to ensure that the school can and will identify and resolve recurring problems and the problem of repeat offenders.[60] Finally, the school must make sure that all designated employees have adequate training as to what conduct constitutes sexual harassment, and are able to explain how the grievance procedure operates.[61]

Grievance procedures may include informal mechanisms for resolving sexual harassment complaints, to be used where the parties agree to do so.[62] OCR has frequently advised schools, however, that it is not appropriate for a student who is complaining of harassment to be required to work out the problem directly with the student alleged to be harassing him or her, and certainly not without appropriate involvement by the school (e.g., participation by a counselor, trained mediator, or, where appropriate, a teacher or administrator). In addition, the complainant must be notified of the right to end the informal process at any time and begin the formal stage of the complaint resolution process. Title IX also permits the use of a student disciplinary procedure not designed specifically for Title IX grievances to resolve sex discrimination complaints, as long as the procedure meets the requirement of affording a complainant a ''prompt and equitable'' resolution of the complaint. In some instances, a complaint may allege harassing conduct that constitutes both sex discrimination and possible criminal conduct. Police investigations or reports may be useful in terms of fact-gathering. However, because they use different standards they may not be dispositive under Title IX, and do not relieve the school of its duty to respond promptly.[63] Similarly, schools are cautioned about using the results of insurance company investigations of sexual harassment allegations. The purpose of an insurance investigation is to determine liability under the insurance policy, and the applicable standards (the insurance contract and applicable state or Federal insurance law) may well be different from those under Title IX. In addition, a school is not relieved of its responsibility to respond to a sexual harassment complaint filed under its grievance procedure by the fact that a complaint has been filed with OCR.[64]

Finally, the United States Constitution guarantees due process to public school students accused of infractions such as sexual harassment. Similarly, state laws may provide additional rights to students, even at private schools. Schools should be aware of these rights and their legal responsibilities to those students accused of harassment. Indeed, procedures that ensure the Title IX rights of the complainant while at the same time according due process to the individual accused of harassment will lead to sound and supportable decisions. The rights established under Title IX must be interpreted consistently with any federally guaranteed rights involved in a complaint. Recipients should ensure that steps to accord due process rights to the accused do not obstruct or delay the protections provided by Title IX to the complainant.

Notice of Outcome and FERPA

The Title IX grievance process should provide for notice of the outcome and disposition of a complaint[65] where doing so is consistent with a school's obligations under the Family Educational Rights and Privacy Act (FERPA) and its regulations.[66] The parties to a complaint need information such as whether or not sexual harassment was found to have occurred and, if so, the steps that the school has taken or will take to correct the discrimination in order to know if the complaint has been resolved equitably.

When determining what information will be provided to and about students, however, a school must consider the requirements of FERPA. FERPA generally prohibits a school from releasing personally identifiable information from a student's education record without the consent of the student (or his or her parents, if the student is a minor).[67] Thus, FERPA's requirements may prevent a school from informing a complainant of any sanction or discipline imposed on a student found guilty of harassment, where that information is contained in the student's education record.[68]

FERPA provides that the complainant may learn of actions taken against

another student in certain limited circumstances. Under FERPA, a student has the right to inspect and review any personally identifiable information contained in the education record of another student if that information is directly related to the first student.[69] For example, in the case of a disciplinary record or order requiring the student harasser not to have contact with the complainant, the complainant would be entitled to review that portion of the record that contains this information; thus, it would not be a violation of FERPA for the school to tell the complainant of the order. Also, where the harassment involves a crime of violence or a sexual assault, postsecondary schools are permitted and may even be required to disclose the results to the complainant.[70]

FERPA is enforced by the Department through its Family Policy Compliance Office, U.S. Department of Education, Washington, D.C. 20202.

First Amendment

In cases of alleged harassment, the protections of the First Amendment must be considered where issues of speech or expression are involved. Free speech rights apply in the classroom (e.g., classroom lectures and discussions)[71] and in all other education programs and activities of public schools (e.g., public meetings and speakers on campus; campus debates, school plays and other cultural events[72]; and student newspapers, journals and other publications[73]).

Title IX is intended to protect students from sex discrimination, not to regulate the content of speech. OCR recognizes that the offensiveness of particular expression as perceived by some students, standing alone, is not a legally sufficient basis to establish a sexually hostile environment under Title IX.[74] In order to establish a violation of Title IX, the harassment must be sufficiently severe, persistent, or pervasive to limit a student's ability to participate in or benefit from the education program, or to create a hostile or abusive educational environment.[75]

Moreover, in regulating the conduct of its students to prevent or redress discrimination prohibited by Title IX (e.g., in responding to peer harassment that is sufficiently severe as to create a hostile environment), a school must formulate, interpret and apply its rules so as to protect free speech rights. For instance, while the First Amendment may prohibit a school from restricting the right of students to express opinions about one sex that may be viewed as derogatory, the school can take steps to denounce such opinions and ensure that competing views are heard. It can also take other measures to prevent and eliminate a sexually hostile environment, such as instituting restrictions related to disorderly or disruptive conduct. Moreover, the age of the students involved and the location or forum may affect how the school can respond consistent with the First Amendment.[76]

Footnotes

1. This guidance is limited to peer sexual harassment that creates a hostile environment. Where a student engages in sexual harassment as an agent or employee of an educational institution, for instance where a student teaching assistant requires a student in his or her class to submit to his or her sexual advances in order to obtain a certain grade in the course, this conduct also would violate Title IX; however, these types of situations are not addressed in this guidance.

2. 20 U.S.C. § 1681 *et seq.* See also 34 C.F.R. § 106.31(b). In analyzing sexual harassment claims, the Department also applies, as appropriate to the educational context, many of the legal principles applicable to sexual harassment in the work place, developed under Title VII of the Civil Rights Act of 1964, 42 U.S.C. § 2000e–2(a). *See Franklin* v. *Gwinnett County Public Schools,* 503 U.S. 60, 75 (1992) (applying Title VII principles in determining that a student was entitled to protection from sexual harassment by a teacher in school under Title IX); *Murray* v. *New York University College of Dentistry,* 57 F.3d 243, 249 (2d Cir. 1995) (same); *Doe* v. *Petaluma City School Dist.,* 830 F. Supp. 1560, 1571–72 (N.D. Cal. 1993) (same), *rev'd in part on other grounds,* 54 F.3d 1447 (9th Cir. 1995).

In addition, many of the principles applicable to racial harassment under Title VI of the Civil Rights Act, 42 U.S.C. § 2000d *et seq.,* and Title VII also apply to sexual harassment under Title IX. Indeed, Title IX was modeled on Title VI, *Cannon* v. *University of Chicago,* 441 U.S. 677, 694 (1979). For information on racial harassment, see the Department's Notice of Investigative Guidance for Racial Harassment, 59 Fed. Reg. 11,448 (1994).

3. Consistent with Supreme Court decisions, *see Franklin,* 503 U.S. at 75 (expressly ruling that the sexual harassment of a student by a teacher violates Title IX), the Department has interpreted Title IX as prohibiting sexual harassment for over a decade. Moreover, it has been OCR's longstanding practice to apply Title IX to peer harassment. *See also Bosley* v. *Kearney R–1 School Dist.,* 904 F. Supp. 1006, 1023 (W.D. Mo. 1995); *Doe* v. *Petaluma,* 830 F. Supp at 1575–76, *motion for reconsideration granted* (July 22, 1996) (reaffirming Title IX liability for peer harassment where the school knows of the hostile environment but fails to take remedial action; applying Title VII standard, i.e., no additional, separate intent requirement); *Burrow* v. *Postville Community School District,* No. C94–1031, 1996 U.S. Dist LEXIS 9147 at *34 (N.D. Iowa June 17, 1996) (student may bring Title IX cause of action against a school for its knowing failure to take appropriate remedial action in response to the hostile environment created by students at the school); *Oona R.-S.* v. *Santa Rosa City Schools,* 890 F. Supp. 1452 (N.D. Cal. 1995); *Davis* v. *Monroe County Bd. of Education,* 74 F.3d 1186, 1193 (11th Cir. 1996) (as Title VII is violated where a sexually hostile working environment is created by co-workers and tolerated by the employer, Title IX is violated where a sexually hostile educational environment is created by a fellow student or students and the supervising authorities knowingly failed to act to eliminate the harassment), *vacated, reh'g granted; cf. Murray* v. *New York University,* 57 F.3d at 249 (while court finds no notice to school, assumes a Title IX cause of action for sexual harassment of a medical student by a patient visiting school clinic).

One Federal court decision, *Rowinsky* v. *Bryan Independent School District,* 80 F.3d 1006 (5th Cir. 1996), *petition for cert. filed* (July 1, 1996), has held to the contrary. In that case, over a strongly worded dissent, the court rejected the authority of other Federal courts and OCR's longstanding construction of Title IX, and held that a school district is not liable under Title IX for peer harassment unless ''the school district itself directly discriminated based on sex,'' i.e., the school responded differently to sexual harassment claims of girls versus boys.

The *Rowinsky* decision misunderstands a school's liability under Title IX. Title IX does not make a school responsible for the actions of the harassing student, but rather for its own discrimination in failing to act and permitting the harassment to continue once a school official knows that it is happening. When a student is sexually harassed by a fellow student, and a school official knows about it but does not stop it, the school is permitting an atmosphere of sexual discrimination to permeate the educational program. The school is liable for its own action, or lack of action, in response to this discrimination. Title VII cases making employers responsible for remedying hostile environment harassment of one worker by a coworker apply this same standard. *See, e.g., Ellison* v. *Brady,* 924 F.2d at 881–82; *Hall* v. *Gus Construction Co.,* 842 F.2d 1010 (8th Cir. 1988); *Hunter* v. *Allis-Chalmers Corp.,* 797 F.2d 1417 (7th Cir. 1986); *Snell* v. *Suffolk,* 782 F.2d 1094 (2nd Cir. 1986); *Robinson* v. *Jacksonville Shipyards,* 760 F. Supp. 1486 (M.D. Fla. 1991).

The petition for certiorari in the *Rowinsky* case (July 1, 1996) will likely be ruled on this fall.

See e.g., Franklin, 503 U.S. at 63 (conduct of a sexual nature found to support a sexual harassment claim under Title IX included kissing, sexual intercourse); *Meritor Savings Bank FSB* v. *Vinson,* 477 U.S. 57, 60–61 (1986) (demands for sexual favors, sexual advances, fondling, indecent exposure, sexual intercourse, rape sufficient to raise hostile environment claim under Title VII); *Harris* v. *Forklift Systems, Inc.,* 510 U.S. ____, 114 S.Ct. 367 (1993) (sexually derogatory comments and innuendo may support a sexual harassment claim under Title VII); *Ellison* v. *Brady,* 924 F.2d 872, 873–74, 880 (9th Cir. 1991) (allegations sufficient to state

a sexual harassment claim under Title VII included repeated requests for dates, letters making explicit references to sex and describing the harasser's feelings for plaintiff); *Lipsett* v. *University of Puerto Rico,* 864 F. 2d 881, 903–4 (1st Cir. 1988) (sexually derogatory comments, posting of sexually explicit drawing of plaintiff, sexual advances may support sexual harassment claim); *Kadiki* v. *Virginia Commonwealth University,* 892 F. Supp. 746, 751 (E.D. Va. 1995) (professor's spanking of a university student may constitute sexual conduct under Title IX); *Doe* v. *Petaluma,* 830 F. Supp. at 1564–65 (sexually derogatory taunts and innuendo can be the basis of a harassment claim); *Denver School Dist.* #1, OCR Case No. 08–92–1007 (same as to allegations of vulgar language and obscenities, pictures of nude women on office walls and desks, unwelcome touching, sexually offensive jokes, bribery to perform sexual acts, indecent exposure); *Nashoba Regional High School,* OCR Case No. 01–92–1377 (same as to year-long campaign of derogatory, sexually explicit graffiti and remarks directed at one student).

Davis v. *Monroe County,* 74 F.3d at 1194, *vacated, reh'g granted; Doe* v. *Petaluma City School Dist.,* 830 F. Supp. at 1571–73; *Moire* v. *Temple University School of Medicine,* 613 F. Supp. 1360, 1366 (E.D. Pa. 1985), aff'd mem., 800 F.2d 1136 (3d Cir. 1986); *see also Vinson,* 477 U.S. at 67; *Lipsett,* 864 F.2d at 901.

Davis v. *Monroe County,* 74 F.3d at 1193–94, *vacated, reh'g granted;* Racial Harassment Guidance, 59 Fed. Reg. at 11,449–50.

As explained in *Rosa H.* v. *San Elizario Ind. School Dist.,* 887 F. Supp. 140, 143 (W.D. Tex. 1995):

[T]he school district is in the best position to be on the lookout for discriminatory conduct * * * A ''knew or should have known'' requirement mandates that the school district monitor its employees and students and prevents a situation where the district, through its employees or policies, turns a blind eye toward discriminatory conduct.

8. 34 CFR § 106.8(b).

9. However, gender-based peer harassment—that is acts of verbal or physical aggression, intimidation, or hostility based on sex but not involving sexual activity or language—is a form of discrimination (just as in the case of harassment based on race or national origin). *Hicks* v. *Gates Rubber Co.,* 833 F.2d 1406, 1416 (10th Cir. 1987) (Title VII case); *McKinney* v. *Dole,* 765 F.2d 1129, 1138 (D.C. Cir. 1985) (Title VII case; assault could be sex-based harassment if shown to be unequal treatment that would not have taken place but for the employee's sex).

10. *Cf. Dartmouth Public Schools,* OCR Case No. 01–90–1058 (contact between high school coach and students not conduct of a sexual nature); *Analy Union High School Dist.,* OCR Case No. 09–92–1249 (same as to drama instructor who put his arms around both male and female students who confided in him); *San Francisco State University,* OCR Case No. 09–94–2038 (same as to faculty advisor placing her arm around graduate student's shoulder in posing for a picture).

11. 20 U.S.C. § 1687 (codification of the Title IX part of the Civil Rights Restoration Act of 1987); *Leija* v. *Cantutillo Ind. School Dist.,* 887 F. Supp. 947, 957 (W.D. Tex. 1995).

12. *Cf. John Does 1* v. *Covington County School Bd.,* 884 F. Supp. 462, 464–65 (M.D. Ala. 1995) (male students alleging that teacher sexually harassed and abused them stated cause of action under Title IX).

13. Title IX and the regulations implementing it prohibit discrimination ''on the basis of sex;'' they do not restrict sexual harassment to those circumstances in which the harasser only harasses members of the opposite sex. *See* 34 C.F.R. § 106.31. In order for hostile environment harassment to be actionable under Title IX, it must create a hostile or abusive environment. This can occur when a student harasses a member of the same sex. *See Doe* v. *Petaluma,* 830 F. Supp. at 1564–65, 1575 (female junior high school student alleging sexual harassment by other students, including both boys and girls, sufficient to raise claim under Title IX). *Cf John Does 1,* 884 F. Supp. at 465 (same as to male students' allegations of sexual harassment and abuse by male teacher). It can also occur in certain situations when the harassment is directed at students of both sexes. *Chiapuzo* v. *BLT Operating Co.,* 826 F. Supp. 1334 (D. Wyo. 1993) (court found that such harassment could violate Title VII).

In many circumstances, harassing conduct will be on the basis of sex because the student would not have been subjected to it at all had he or she been a member of the opposite sex; e.g., where a female student is repeatedly propositioned by a male student (or, for that matter, where a male student is repeatedly propositioned by a male student). In other circumstances, harassing conduct will be on the basis of sex where the student would not have been affected by it in the same way or to the same extent had he or she been a member of the opposite sex; e.g., pornography and sexually explicit jokes in a mostly male shop class are likely to affect the few girls in the class more than it will most of the boys.

In yet other circumstances, the conduct will be on the basis of sex in that the student's sex was a factor in and/or affected the nature of the harasser's conduct. Thus, in *Chiapuzo,* a supervisor made demeaning remarks to both partners of a married couple working for him, e.g., as to sexual acts he wanted to engage in with the wife and how he would be a better lover than the husband. In both cases, according to the court, the remarks were gender-driven in that they were made with an intent to demean each member of the couple because of his or her respective sex. *See also Steiner* v. *Showboat Operating Co.,* 25 F.3d 1458, 1463–64 (9th Cir. 1994) (Title VII case).

14. *Nashoba Regional High School,* OCR Case No. 01–92–1397. In *Conejo Valley School Dist.,* OCR Case No. 09–93–1305 (5/27/94), female students allegedly taunted another female student about engaging in sexual activity; OCR found that the alleged comments were sexually explicit and, if true, would be sufficiently severe, persistent and pervasive to create a hostile environment.

15. *Williamson* v. *A.G. Edwards & Sons, Inc.,* 876 F.2d 69 (8th Cir. 1989), (Title VII case) *cert. denied* 493 U.S. 1089 (1994); *DeSantis* v. *Pacific Tel. & Tel. Co., Inc.,* 608 F.2d 327 (9th Cir. 1979) (same); *Blum* v. *Gulf Oil Corp.,* 597 F.2d 936 (5th Cir. 1979) (same).

16. *See* note 3.

17. As with peer harassment by its own students, a school's liability for the harassment of its students by others is based on its obligation to provide an environment free of discrimination. Racial Harassment Investigative Guidance, 59 Fed. Reg. at 11,450 (referring to harassment by neighborhood teenagers, guest speaker, and parents); *Murray,* 57 F.3d at 250 (student participating in university dental clinic providing services to the public alleged harassment by a patient; while court ruled in defendant's favor because of lack of notice, it considered such a claim actionable under Title IX).

18. For example, where athletes from a visiting team harass the home school's students, the home school may not be able to discipline the students. However, it could encourage the athletes' school to take appropriate action to prevent further incidents; if necessary, the home school may choose not to invite the athletes' school back. *Cf. Danna* v. *New York Telephone Co,* 752 F. Supp. 594, 611 (S.D.N.Y. 1990) (telephone company in violation of Title VII for not taking sufficient action to protect its own employee from sexually explicit graffiti at airport where she was assigned to work, e.g., contacting airport management to see what remedial measures could be taken).

19. *Henson* v. *City of Dundee,* 682 F.2d 897, 903 (11th Cir. 1982) (Title VII case).

20. [T]he fact that sex-related conduct was ''voluntary,'' in the sense that the complainant was not forced to participate against her will, is not a defense to a sexual harassment suit brought under Title VII * * *. The correct inquiry is whether [the subject of the harassment] by her conduct indicated that the alleged sexual advances were unwelcome, not whether her actual participation in sexual intercourse was voluntary.
Vinson, 477 U.S. at 68.

21. *Lipsett,* 864 F.2d at 898 (while, in some instances, a person may have the responsibility for telling the harasser directly that the conduct is unwelcome, in other cases a ''consistent failure to respond to suggestive comments or gestures may be sufficient * * *.''); *Danna,* 752 F. Supp. at 612 (despite female employee's own foul language and participation in graffiti writing, her complaints to management indicated that the harassment was not welcome); *see also Carr* v. *Allison Gas Turbine Div., GMC,* 32 F.3d 1007, 1011 (7th Cir. 1994) (Title VII case; cursing and dirty jokes by female employee did not show that she welcomed the sexual harassment, given her frequent complaints about it: ''Even if . . . [the employee's] testimony that she talked and acted as she did [only] in an effort to be 'one of the boys' is . . . discounted, her words and conduct cannot be compared to those of the men and used to justify their conduct. . . . The asymmetry of positions must be considered. She was one woman; they were many men. Her use of [vulgar] terms . . . could not be deeply threatening.'').

22. *Reed* v. *Shepard,* 939 F.2d 484, 486–87, 491–92 (7th Cir. 1991) (no harassment

found under Title VII where female employees not only tolerated, but also participated and instigated the suggestive joking activities about which she was now complaining); *Weinsheimer* v. *Rockwell Int'l Corp.,* 754 F. Supp. 1559, 1563–64 (D. Fl. 1990) (same, where general shop banter was full of vulgarity and sexual innuendo by men and women alike, and plaintiff contributed her share to this atmosphere).

23. *Davis* v. *Monroe County,* 74 F.3d at 1126 (when interpreting the requirement in *Harris* that the harassment must unreasonably interfere with the plaintiff's performance, 114 S.Ct. at 371, the court stated: ''* * * if the plaintiff does not subjectively perceive the environment to be abusive, then the conduct has not actually altered the conditions of her learning environment, and there is no Title IX violation''), *vacated, reh'g granted.*

24. The Supreme Court used a ''reasonable person'' standard in *Harris,* 114 S.Ct. at 370–71 to determine whether sexual conduct constituted harassment. This standard has been applied under Title VII to take into account the sex of the subject of the harassment, *see, e.g., Ellison* v. *Brady,* 924 F.2d at 878–79 (applying a ''reasonable women'' standard to sexual harassment), and has been adapted to sexual harassment in education, *Davis* v. *Monroe County,* 74 F.3d at 1126 (relying on *Harris* to adopt an objective, reasonable person standard), *vacated, reh'g granted; Patricia H.* v. *Berkeley Unified School Dist.,* 830 F. Supp. 1288, 1296 (N.D. Cal. 1993) (adopting a ''reasonable victim'' standard and referring to OCR's use of it); Racial Harassment Guidance, 59 Fed. Reg. at 11,452 (the standard must take into account the characteristics and circumstances of victims on a case-by-case basis, particularly the victim's race and age).

25. *Harris,* 114 S.Ct. at 371; Racial Harassment Guidance, 59 Fed. Reg. at 11449 and 11452.

26. *Davis* v. *Monroe County,* 74 F.3d at 1126 (no Title IX violation unless the conduct has ''actually altered the conditions of [the student's] learning environment''), *vacated, reh'g granted; Lipsett,* 864 F.2d at 898 (''altered'' the educational environment); *Patricia H.,* 830 F. Supp. at 1297 (sexual harassment could be found where conduct interfered with student's ability to learn); *see also Andrews,* 895 F.2d at 1482 (Title VII case).

27. *Harris,* 114 S.Ct. at 371.

28. *See e.g., Doe* v. *Petaluma,* 830 F. Supp at 1566 (student so upset about harassment by other students that she was forced to transfer several times, including finally to a private school); *Modesto City Schools,* OCR Case No. 09–93–1391 (evidence showed that one girl's grades dropped while the harassment was occurring); *Weaverville Elementary School,* OCR Case No. 09–91–1116 (students left school due to the harassment). *Compare with College of Alameda,* OCR Case No. 09–90–2104 (student not in instructor's class and *no* evidence of any effect on student's educational benefits or services, so no hostile environment).

29. *Doe* v. *Petaluma,* 830 F. Supp. at 1566.

30. *See Harris,* 114 S.Ct. at 371, where the Court held that tangible harm is not required. In determining whether harm is sufficient, several factors are to be considered, including frequency, severity, whether the conduct was threatening or humiliating versus a mere offensive utterance, and whether it unreasonably interfered with work performance. No single factor is required; similarly, psychological harm, while relevant, is not required.

31. *See Modesto City Schools,* OCR Case No. 09–93–1391 (evidence showed that several girls were afraid to go to school because of the harassment).

32. *Summerfield Schools,* OCR Case No. 15–92–1029.

33. *See Waltman* v. *Int'l Paper Co.,* 875 F.2d 468, 477 (5th Cir. 1989) (Title VII case); *see also Hall* v. *Gus Construction Co.,* 842 F.2d at 1015 (evidence of sexual harassment directed at others is relevant to show hostile environment under Title VII); Racial Harassment Investigative Guidance, 59 Fed. Reg. at 11,453.

34. *See, e.g., Andrews,* 895 F.2d at 1484 (''Harassment is pervasive when 'incidents of harassment occur either in concert or with regularity'.''); *Moylan* v. *Maries County,* 792 F.2d 746, 749 (8th Cir. 1986) (Title VII case); *Downes* v. *Federal Aviation Administration,* 775 F.2d 288, 293 (D.C. Cir. 1985) (same); *cf. Scott* v. *Sears, Roebuck and Co.,* 798 F.2d 210, 214 (7th Cir. 1986) (Title VII case; conduct was not pervasive or debilitating).

35. The U.S. Equal Employment Opportunity Commission (EEOC) has stated: ''The Commission will presume that the unwelcome, intentional touching of [an employee's] intimate body areas is sufficiently offensive to alter the conditions of her working environment and constitute a violation of Title VII. More so than in the case of verbal advances or remarks, a single unwelcome physical advance can seriously poison the victim's working environment.'' EEOC Policy Guidance on Current Issues of Sexual Harassment, p. 17. *See also Barrett* v. *Omaha National Bank,* 584 F. Supp. 22, 30 (D. Neb. 1983), *aff'd,* 726 F.2d 424 (8th Cir. 1984) (hostile environment created under Title VII by isolated events, i.e., occurring while traveling to and during a two day conference, including the coworker's talking to plaintiff about sexual activities and touching her in offensive manner while they were inside a vehicle from which she could not escape).

36. *See also Ursuline College,* OCR Case No. 05–91–2068 (A single incident of comments on a male student's muscles arguably not sexual; however, assuming they were, not severe enough to create a hostile environment).

37. *See, e.g., McKinney,* 765 F.2d at 1138–40; *Robinson* v. *Jacksonville Shipyard,* 760 F. Supp. at 1522.

38. *Cf. Patricia H.,* 830 F. Supp. at 1297.

39. *See also Barrett* v. *Omaha National Bank,* 584 F. Supp. at 24 (harassment occurring in a car from which the plaintiff could not escape was deemed particularly severe).

40. *Midwest City-Del City Public Schools,* OCR Case No. 06–92–1012 (finding of racially hostile environment based in part on several racial incidents at school shortly before incidents in complaint, a number of which involved the same student involved in the complaint). *See also Hall* v. *Gus Construction Co.* 842 F.2d at 1015 (incidents of sexual harassment directed at other employees); *Hicks* v. *Gates Rubber,* 833 F.2d at 1415–16 (same).

41. *See Vinson,* 477 U.S. at 65–66; *Harris,* 114 S. Ct. at 370–371; *see also Hicks* v. *Gates Rubber Co.,* 833 F.2d 1406, 1416 (10th Cir. 1987) (Title VII case).

42. *See Harris,* 114 S. Ct. at 370–71; *Andrews* v. *City of Philadelphia,* 895 F.2d 1469, 1485–86 (3rd Cir. 1990) (Title VII case; court directed trial court to consider sexual conduct as well as theft of female employees' files and work, destruction of property, and anonymous phone calls in determining if there had been sex discrimination); *see also Hall* v. *Gus Construction Co.,* 842 F.2d 1094, 1014 (8th Cir. 1988) (Title VII case); *Hicks,* 833 F.2d at 1415; *Eden Prairie Schools, Dist.* #272, OCR Case No. 05–92–1174 (the boys made lewd comments about male anatomy *and* tormented the girls by pretending to stab them with rubber knives; while the stabbing was not sexual conduct, it was directed at them because of their sex, i.e., because they were girls). In addition, incidents of racial or national origin harassment directed at a particular individual may also be aggregated with incidents of sexual or gender harassment directed at that individual in determining the existence of a hostile environment. *Hicks* v. *Gates Rubber Co.,* 833 F.2d at 1416; *Jefferies* v. *Harris Community Action Ass'n,* 615 F.2d 1025, 1032 (5th Cir. 1980) (Title VII case).

43 Racial Harassment Guidance, 59 Fed. Reg. at 11450 (discussing how a school may receive notice).

44. *See Yates* v. *Avco Corp.,* 819 F.2d 630, 634–36 (6th Cir. 1987) (Title VII case); *Katz* v. *Dole,* 709 F.2d 251, 256 (4th Cir. 1983) (same); *See also* Racial Harassment Investigative Guidance, 59 Fed. Reg. at 11,450.

45. *Cf. Katz* v. *Dole,* 709 F.2d at 256 (the employer ''should have been aware of the * * * problem both because of its pervasive character and because of Katz' specific complaints * * *''); *Smolsky* v. *Consolidated Rail Corp.,* 780 F. Supp. 283, 293 (E.D. Pa. 1991), *reconsideration denied,* 785 F. Supp. 71 (E.D. Pa. 1992) (''where the harassment is apparent to all others in the work place, supervisors and coworkers, this may be sufficient to put the employer on notice of the sexual harassment'' under Title VII); *Jensen* v. *Eveleth Taconite Co.,* 824 F. Supp. 847, 887 (D. Minn. 1993) (Title Vii case; ''[s]exual harassment * * * was so pervasive that an inference of knowledge arises * * *. The acts of sexual harassment detailed herein were too common and continuous to have escaped Eveleth Mines had its management been reasonably alert.''); *Cummings* v. *Walsh Construction Co.,* 561 F. Supp. 872, 878 (S.D. Ga. 1983) (''* * * allegations not only of the [employee] registering her complaints with her foreman * * * but also that sexual harassment was so widespread that defendant had constructive notice of it'' under Title VII); *but see Murray,* 57 F.3d at 250–51 (that other students knew of the conduct was not enough to charge the school with notice, particularly where these

students may not have been aware that the conduct was offensive or abusive).

46. *See* 34 C.F.R. § 106.8(b). Moreover, schools have an obligation to ensure that the educational environment is free of harassment, and cannot fulfill this obligation without determining whether sexual harassment complaints have merit.

47. *Fenton Community High School Dist.* #100, OCR Case No. 05–92–1104.

48. *See* Racial Harassment Investigative Guidance, 59 Fed. Reg. at 11,450.

49. *See Vinson,* 477 U.S. at 72–73.

50. Schools have an obligation to ensure that the educational environment is free of harassment, and cannot fulfill this obligation without determining where sexual harassment complaints have merit. Moreover, failure to respond to a complaint does not meet the ''prompt and equitable'' requirements for grievance procedures under Title IX.

51. *Cf. Bundy* v. *Jackson,* 641 F.2d 934, 947 (D.C. Cir. 1981) (employers should take corrective and preventive measures under Title VII); *accord, Jones* v. *Flagship Int'l,* 793 F.2d 714, 719–720 (5th Cir. 1986) (employer should take prompt remedial action under Title VII). Racial Harassment Investigative Guidance, 59 Fed. Reg. at 11,450.

52. *Waltman* v. *Int'l Paper Co.,* 875 F.2d at 479 (appropriateness of employer's remedial action under Title VII will depend on the severity and persistence of the harassment and the effectiveness of any initial remedial steps); *Dornhecker* v. *Malibu Grand Prix Corp.,* 828 F.2d 307, 309–10 (5th Cir. 1987) (Title VII case; employer arranged for victim to no longer work with alleged harasser).

53. Offering assistance in changing living arrangements is one of the actions required of colleges and universities by the Campus Security Act in cases of rape and sexual assault. *See* 20 U.S.C. 1092(f).

54. *Leija,* 878 F. Supp. at 957 (medical and mental health treatment and any special education needed as a result of the harassment); *University of California at Santa Cruz,* OCR Case No. 09–93–2141 (extensive individual and group counseling); *Eden Prairie Schools, Dist.* #272, OCR Case No. 05–92–1174 (counseling).

55. Even if the harassment stops without the school's involvement, the school may still need to take steps to prevent or deter any future harassment—to inform the school community that harassment will not be tolerated. *Fuller* v. *City of Oakland,* 47 F.3d 1522, 1528–29 (9th Cir. 1995).

56. *Tacoma School Dist. No. 10,* OCR Case No. 10–94–1079 (due to the large number of students harassed by an employee, the extended period of time over which the harassment occurred, and the failure of several of the students to report the harassment, school committed as part of corrective action plan to providing training for students); *Los Medanos College,* OCR Case No. 09–84–2092 (as part of corrective action plan, school committed to providing sexual harassment seminar for campus employees); *Sacramento City Unified School Dist.,* OCR Case No. 09–83–1063 (same as to workshops for management and administrative personnel, in-service training for non-management personnel).

57. 34 C.F.R § 106.8(b). This requirement has been part of the Title IX regulations, since their inception in 1975. Thus, schools have been required to have these procedures in place since that time. At the elementary and secondary level, this responsibility generally lies with the school district. At the postsecondary level, there may be a procedure for a particular campus or college, or for an entire university system.

58. 34 C.F.R. § 106.8(a).

59. *Id.*

60. *University of California, Santa Cruz,* OCR Case No. 09–93–2141; *Sonoma State University,* OCR Case No. 09–93–2131. This is true for formal as well as informal complaints. *See University of Maine at Machias,* OCR Case No. 01–94–6001 (school's new procedures not found in violation of Title IX in part because they require written records for informal as well as formal resolutions). These records need not be kept in a student's individual file.

61. For example, in *Cape Cod Community College,* OCR Case No. 01–93–2047, the College was found to have violated Title IX in part because the person identified by the school as the Title IX coordinator was unfamiliar with Title IX, had no training, and did not even realize he was the coordinator.

62. Indeed, in *University of Maine at Machias,* OCR Case No. 01–94–6001, OCR found the school's procedures to be inadequate because only formal complaints were investigated. While a school isn't required to have an established procedure for resolving informal complaints, they nevertheless must be addressed in some way. However, where there are indications that the same individual may be harassing others, then it may not be appropriate to resolve an informal complaint without taking steps to address the entire situation.

63. *Academy School Dist. No. 20,* OCR Case No. 08–93–1023 (school's response determined to be insufficient where it stopped its investigation after complaint filed with police); *Mills Public School Dist.,* OCR Case No. 01–93–1123 (not sufficient for school to wait until end of police investigation).

64. *Cf. EEOC* v. *Board of Governors of State Colleges and Universities,* 957 F.2d 424 (7th Cir.) (Title VII case), *cert. denied,* 113 S.Ct. 299 (1992); *Johnson* v. *Palma,* 931 F.2d 203 (2nd Cir. 1991) (same).

65. *University of California, Santa Cruz,* OCR Case No. 09–93–2141; *Cerro Cosa Community College,* OCR Case No. 09–92–2120.

66. *See* 20 U.S.C. § 1232g; 34 C.F.R. Part 99.

67. *Id.*

68. Under FERPA, education records are defined as records, documents, or other materials maintained by a school that contain information directly related to a student. 20 U.S.C. § 1232(g)(4).

69. 20 U.S.C. § 1232g(a)(1)(A); 34 C.F.R. § 99.12(a).

70. Colleges and other postsecondary schools are required to disclose the outcome in cases involving sexual assault, 20 U.S.C. § 1092(f). In addition, information about ''crimes of violence'' can be disclosed to the complainant consistent with FERPA, 20 U.S.C. § 1232(g)(b)(6).

71. *See, e.g., George Mason University,* OCR Case No. 03–94–2086 (law professor's use of a racially derogatory word, as part of an instructional hypothetical regarding verbal torts, did not constitute racial harassment); *Portland School Dist. 1J,* OCR Case No. 10–94–1117 (reading teacher's choice to substitute a less offensive term for a racial slur when reading a historical novel aloud in class constituted an academic decision on presentation of curriculum, not racial harassment).

72. *See Iota Xi Chapter of Sigma Chi Fraternity* v. *George Mason University,* 993 F.2d 386 (4th Cir. 1993) (fraternity skit in which white male student dressed as an offensive caricature of a black female constituted student expression).

73. *See Florida Agricultural and Mechanical University,* OCR Case No. 04–92–2054 (no discrimination where campus newspaper, which welcomed individual opinions of all sorts, printed article expressing one student's viewpoint on white students on campus).

74. *See, e.g., University of Illinois,* OCR Case No. 05–94–2104 (fact that university's use of Native American symbols was offensive to some Native American students and employees was not dispositive, in and of itself, in assessing a racially hostile environment claim under Title VI).

75. *Cf. Vinson,* 477 U.S. at 67 (the ''mere utterance of an ethnic or racial epithet which engenders offensive feelings in an employee'' would not affect the conditions of employment to a sufficient degree to violate Title VII), quoting *Henson,* 682 F.2d at 904.

76. *Compare Bethel School Dist. No. 403* v. *Fraser,* 478 U.S. 675, 685 (1986) (Court upheld discipline of high school student for making lewd speech to student assembly, noting that ''[t]he undoubted freedom to advocate unpopular and controversial issues in schools and classrooms must be balanced against the society's countervailing interest in teaching students the boundaries of socially appropriate behavior.''), *with Iota XI* 993 F.2d 386 (holding that, notwithstanding a university's mission to create a culturally diverse learning environment and its substantial interest in maintaining a campus free of discrimination, it could not punish students who engaged in an offensive skit with racist and sexist overtones).

[FR Doc. 96–25283 Filed 10–3–96; 8:45 am]

BILLING CODE 4000–01–P

federal register

Friday
October 4, 1996

Part IV

Department of Housing and Urban Development

24 CFR Part 585

Opportunities for Youth; Youthbuild Program Streamlining; Amendment of Interim Rule; Final Rule

DEPARTMENT OF HOUSING AND URBAN DEVELOPMENT

24 CFR Part 585

[Docket No. FR–4038–N–02]

RIN 2506–AB79

Office of the Assistant Secretary for Community Planning and Development; Opportunities for Youth: Youthbuild Program Streamlining; Amendment of Interim Rule

AGENCY: Office of the Assistant Secretary for Community Planning and Development, HUD.

ACTION: Final rule.

SUMMARY: This final rule amends the interim rule which amended the regulations for the Youthbuild Program to define administrative costs for which Youthbuild funds may be expended. This final rule also makes streamlining amendments to part 585.

EFFECTIVE DATE: November 4, 1996.

FOR FURTHER INFORMATION CONTACT: The Office of Economic Development, Department of Housing and Urban Development, Room 7136, 451 Seventh Street, SW, Washington, DC 20410. Telephone (202) 708–2035; TTY (202) 708–1455. (These telephone numbers are not toll-free.)

SUPPLEMENTARY INFORMATION:

Background

Section 164 of the Housing and Community Development Act of 1992 (Pub.L. 102–550) amended title IV of the National Affordable Housing Act (42 U.S.C. 1437aaa) to add a new subtitle D which established the Youthbuild program. On February 21, 1995, the Department published a final rule at 60 FR 9734, which is codified at 24 CFR Part 585.

Amendment of Interim Rule

On May 17, 1996, the Department published an interim rule which further addressed the use of Youthbuild funds for administrative costs, including overhead and salaries and wages associated with an implementation grant. The public comment period on the interim rule expired on July 1, 1996. Fourteen commenters responded: Ten recipients of Youthbuild funds, one potential grant operator, one certified public accounting firm, and two national organizations. Overall, the commenters believe that the rule diminishes the quality of the program and is contrary to the goal of increasing the number of young adults in Youthbuild programs. The commenters believe that it is contradictory to the guiding principles in HUD's Community Planning and Development programs and hampers the comprehensive approach to the program. The commenters also assert that Youthbuild has worked up until now because HUD has recognized the need to stimulate community investment and support for Youthbuild's success and that the interim rule starts the unraveling of this philosophy by weakening the infrastructure that guides the Youthbuild program. The Department welcomes the comments of the grantees and participants in the Youthbuild Program, and therefore in recognition of the overwhelming criticism of the May 17, 1996 interim rule, the Department criticism of the May 17, 1996 interim rule, the Department further amends § 585.305(m) by removing paragraphs (m)(1) and (m)(2) which were added by the interim rule.

Streamlining of Part 585

President Clinton's memorandum of March 4, 1995, titled ''Regulatory Reinvention Initiative'' directed heads of Federal departments and agencies to review all existing regulations to eliminate those that are outdated and modify others to increase flexibility and reduce burden. As a part of HUD's overall effort to reduce regulatory burden and streamline the content of title 24 of the Code of Federal Regulations, this rule removes those provisions which are unnecessary to be codified and can be made available through other non-rulemaking means.

The Youthbuild program is authorized under subtitle D of title IV of the National Affordable Housing Act (42 U.S.C. 12899) (''NAHA''), as added by section 164 of the Housing and Community Development Act of 1992 (Pub. L. 102–550). Several provisions of the Youthbuild regulations repeat statutory language from the legislation. It is unnecessary to maintain statutory requirements in the Code of Federal Regulations (CFR), since these requirements are otherwise fully accessible and binding. Furthermore, if regulations contain statutory language, HUD must amend the regulations whenever Congress amends the statute. This final rule removes repetitious statutory language and replaces it with a citation to the specific statutory section for easy reference. The following streamlining amendments are made, therefore, by this rule:

1. Section 585.2 *Program Purpose* is amended to state that the purpose is set out in section 451 of NAHA.

2. Section 585.4 *Definitions* is amended to remove the definitions for ''adjusted income,'' ''community based organization,'' ''homeless individual,'' ''housing development agency,'' ''Indian tribe,'' ''individual who has dropped out of high school,'' ''institution of higher education,'' ''limited-English proficiency,'' ''low-income family,'' ''offender,'' ''State,'' and ''very low-income family.'' An introductory statement is added to § 585.4 stating that the definitions for these terms can be found in section 457 of NAHA.

3. Section 585.309 *Project-related restrictions applicable to Youthbuild residential rental housing* is amended to revise paragraph (e) to state that the monthly rental limitation and the profit limitations on partners can be found in sec. 455(c)(1) and (2) of NAHA, respectively. The same amendment is made to § 585.310 *Project-related restrictions applicable to Youthbuild transitional housing for the homeless.*

4. Section 585.312 *Wages, labor standards, and nondiscrimination* is revised to state that the applicable provisions are set out in sec. 456(e) of NAHA.

Justification for Final Rule on Streamlining Provisions

HUD generally publishes a rule for public comment before issuing a rule for effect, in accordance with its own regulations on rulemaking in 24 CFR part 10. However, part 10 provides for exceptions to the general rule if the agency finds good cause to omit advance notice and public participation. The good cause requirement is satisfied when prior public procedure is ''impracticable, unnecessary, or contrary to the public interest'' (24 CFR 10.1). HUD finds that good cause exists to publish this rule for effect without first soliciting public comment on the streamlining provisions. The streamlining provisions merely remove unnecessary regulatory provisions and do not establish or affect substantive policy. Therefore, prior public comment is unnecessary.

Findings and Certifications

(a) *Environmental Impact.* A Finding of No Significant Impact with respect to the environment for this rule has been made in accordance with HUD regulations at 24 CFR part 50, which implement section 102(2)(C) of the National Environmental Policy Act of 1969. The Finding of No Significant Impact is available for public inspection between 7:30 a.m. and 5:30 p.m. weekdays in the Office of the Rules Docket Clerk, Office of the General Counsel, Department of Housing and Urban Development, Room 10276, 451

Seventh Street, SW., Washington, DC 20410.

(b) *Regulatory Flexibility Act.* The Secretary, in accordance with the Regulatory Flexibility Act (5 U.S.C. 605(b)), has reviewed this rule before publication and by approving it certifies that this rule will not have a significant economic impact on a substantial number of small entities because the rule merely withdraws an interim rule and makes nonsubstantive streamlining amendments to part 585.

(c) *Executive Order 12612, Federalism.* The General Counsel, as the Designated Official under section 6(a) of Executive Order 12612, *Federalism,* has determined that this rule does not have ''federalism implications'' because it does not have substantial direct effects on the States (including their political subdivisions), or on the distribution of power and responsibilities among the various levels of government.

(d) *Executive Order 12606, The Family.* The General Counsel, as the Designated Official under Executive Order 12606, *The Family,* has determined that this rule will not have a potential significant impact on family formation, maintenance, and general well-being. This rule merely withdraws an interim rule and makes nonsubstantive streamlining amendments to part 585.

(e) *Unfunded Mandates Reform Act.* Title II of the Unfunded Mandates Reform Act of 1995, Pub. L. 104–4, established requirements for Federal agencies to assess the effects of their regulatory actions on State, local, and tribal governments and the private sector. This rule does not impose any Federal mandates on any State, local, or tribal governments or the private sector within the meaning of the Unfunded Mandates Reform Act of 1995.

(f) *Catalog of Federal Domestic Assistance.* The Catalog of Federal Domestic Assistance Program number assigned to this program is 14.243.

(g) *List of Subjects in 24 CFR Part 585.* Grant programs—housing and community development, Homeless, Low- and very low-income families, Reporting and record keeping requirements.

Accordingly, for the reasons set forth in the preamble, part 585 of title 24 of the Code of Federal Regulations is amended as follows:

PART 585—YOUTHBUILD PROGRAM

1. The authority citation for part 585 continues to read as follows:

Authority: 42 U.S.C. 3535(d) and 12899.

2. Section 585.2 is revised to read as follows:

§ 585.2 Program Purpose.

The purposes of the Youthbuild program are set out in section 451 of the National Affordable Housing Act (42 U.S.C. 12899) (''NAHA'').

3. Section 585.4 is amended to remove the definitions for ''adjusted income,'' ''community based organization,'' ''homeless individual,'' ''housing development agency,'' ''Indian tribe,'' ''individual who has dropped out of high school,'' ''institution of higher education,'' ''limited-English proficiency,'' ''low-income family,'' ''offender,'' ''State,'' and ''very low-income family'' and to add introductory text to read as follows:

§ 585.4 Definitions.

The terms ''adjusted income,'' ''community based organization,'' ''homeless individual,'' ''housing development agency,'' ''Indian tribe,'' ''individual who has dropped out of high school,'' ''institution of higher education,'' ''limited-English proficiency,'' ''low-income family,'' ''offender,'' ''State,'' and ''very low-income family'' are defined in section 457 of NAHA.

* * * * *

§ 585.305 [Amended]

4. In § 585.305, paragraph (m) is amended to remove paragraphs (m)(1) and (m)(2).

5. Section 585.309 is amended to revise paragraph (e) to read as follows:

§ 585.309 Project-related restrictions applicable to Youthbuild residential rental housing.

* * * * *

(e) *Limitations on profit.* Youthbuild residential rental housing projects meeting the requirements of this section shall be restricted from producing profit in excess of the limitations set out in sections 455(c)(1) and (2) of NAHA.

* * * * *

6. Section 585.310 is amended to revise paragraph (a) to read as follows:

§ 585.310 Project-related restrictions applicable to Youthbuild transitional housing for the homeless.

* * * * *

(a) *Limitations on profit.* Youthbuild residential rental housing projects meeting the requirements of this section shall be restricted from producing profit in excess of the limitations set out in sections 455(c)(1) and (2) of NAHA.

* * * * *

7. Section 585.312 is revised to read as follows:

§ 585.312 Wages, labor standards, and nondiscrimination.

Applicable provisions are stated in section 456(e) of NAHA.

Dated: September 24, 1996.

Andrew M. Cuomo,

Assistant Secretary for Community Planning and Development.

[FR Doc. 96–25298 Filed 10–3–96; 8:45 am]

BILLING CODE 4210–29–P

federal register

Friday
October 4, 1996

Part V

Department of Agriculture

Animal and Plant Health Inspection Service

7 CFR Part 301

Karnal Bunt Disease; Domestic Plant-related Quarantine; Final Rule

DEPARTMENT OF AGRICULTURE

Animal and Plant Health Inspection Service

7 CFR Part 301

[Docket No. 96–016–14]

Karnal Bunt

AGENCY: Animal and Plant Health Inspection Service, USDA.

ACTION: Final rule.

SUMMARY: We are establishing criteria for levels of risk for areas with regard to Karnal bunt and for the movement of regulated articles based on those risk levels, and are establishing criteria for the planting of seed from Karnal bunt host crops. These actions are warranted because they relieve unnecessary restrictions on areas regulated because of Karnal bunt, while guarding against the artificial spread of that disease. We are also making final, with some changes, the Karnal Bunt regulations established in a series of interim rules, and are removing some areas from the list of areas regulated because of Karnal bunt.

EFFECTIVE DATE: November 4, 1996.

FOR FURTHER INFORMATION CONTACT: Mr. Mike Stefan, Operations Officer, Domestic and Emergency Operations, PPQ, APHIS, 4700 River Road Unit 134, Riverdale, MD 20737–1236, (301) 734–8247.

SUPPLEMENTARY INFORMATION:

Background

Karnal bunt is a fungal disease of wheat (*Triticum aestivum*), durum wheat (*Triticum durum*), and triticale (*Triticum aestivum* X *Secale cereale*), a hybrid of wheat and rye. The establishment of Karnal bunt in the United States would have significant consequences with regard to the export of wheat to international markets. Karnal bunt is caused by the smut fungus *Tilletia indica (*Mitra) Mundkur and is spread by spores. The regulations regarding Karnal bunt are set forth in 7 CFR 301.89–1 through 301.89–14.

On March 8, 1996, Karnal bunt was detected in Arizona during a seed certification inspection done by the Arizona Department of Agriculture. On March 20, 1996, the Secretary of Agriculture signed a ''Declaration of Extraordinary Emergency'' authorizing the Secretary to take emergency action under 7 U.S.C. 150dd with regard to Karnal bunt within the States of Arizona, New Mexico, and Texas. In an interim rule effective on March 25, 1996, and published in the Federal Register on March 28, 1996 (61 FR 13649–13655, Docket No. 96–016–3), the Animal and Plant Health Inspection Service (APHIS) established the Karnal bunt regulations (7 CFR 301.89–1 through 301.89–11), and quarantined all of Arizona and portions of New Mexico and Texas because of Karnal bunt. The regulations define regulated articles and restrict the movement of these regulated articles from the quarantined areas.

After the establishment of the regulations, Karnal bunt was detected in seed lots that were either planted or stored in California. On April 12, 1996, the Secretary of Agriculture signed a ''Declaration of Extraordinary Emergency'' authorizing the Secretary to take emergency action under 7 U.S.C. 150dd with regard to Karnal bunt within California. In an interim rule effective on April 19, 1996, and published in the Federal Register on April 25, 1996, APHIS also quarantined portions of California because of Karnal bunt (61 FR 18233–18235, Docket No. 96–016–5). In an interim rule effective on June 27, 1996, and published in the Federal Register on July 5, 1996, we removed certain areas in Arizona, New Mexico, and Texas from the list of areas quarantined because of Karnal bunt (61 FR 35107–35109, Docket No. 96–016–6). That list was amended in a technical amendment effective on July 9, 1996, and published in the Federal Register on July 15, 1996 (61 FR 36812–36813, Docket No. 96–016–8). In an interim rule effective June 27, 1996, and published in the Federal Register on July 5, 1996, we amended the regulations to provide compensation for certain growers and handlers, owners of grain storage facilities, and flour millers in order to mitigate losses and expenses incurred because of actions taken by the Secretary to prevent the spread of Karnal bunt (61 FR 35102–35107, Docket No. 96–016–7).

In a proposed rule published in the Federal Register on August 2, 1996 (61 FR 40354–40361, Docket No. 96–016–10), we proposed to establish criteria for levels of risk for areas with regard to Karnal bunt and the movement of regulated articles based on those risk levels, and to establish criteria for seed planting.

Comments from the public regarding the interim rules and the proposed rule were required to be received by APHIS by September 3, 1996. During the comment period, public forums were conducted in Washington, D.C.; Kansas City, MO; Phoenix, AZ; Imperial, CA; and Las Cruces, NM, to accept public comment on the regulations.

We received a total of 178 comments on the interim rules and the proposed rule by September 3, 1996. The commenters included members of Congress, State departments of agriculture, agricultural associations and councils, local governments, the wheat industry, academia, and other members of the public. The information we received from commenters was a valuable resource in formulating this final rule. We consider refinement and improvement of the Karnal bunt program an ongoing process, and welcome data that will enable us to protect wheat-growing areas of the United States, while causing the least possible disruption to affected areas.

We discuss below each of the issues raised by the commenters. We first discuss those comments addressing the Karnal bunt regulations that were established by the series of interim rules. These regulations were established on an emergency basis and are currently in effect. We then discuss those comments that address our August 2, 1996, proposal to amend the Karnal bunt regulations. Based on the comments received, we have made a number of changes to the existing Karnal bunt regulations, as well as to the regulatory revisions we proposed. In most cases, changes that were prompted by a specific comment recommendation are identified with our discussion of that comment. Additionally, as part of our discussion of our proposed rule in this document, we set forth a summary of the broad changes we are making to the way we will classify regulated areas, and the practical implications of falling into a particular classification category.

It is important to note that this final rule does not change or make final the interim rule made effective June 27, 1996, and published in the Federal Register on July 5, 1996, in which we amended the regulations to provide compensation for certain growers and handlers, owners of grain storage facilities, and flour millers in order to mitigate losses and expenses incurred because of Karnal bunt. We are still considering issues related to compensation.

Comments Addressing the Interim Rules

Several commenters supported the provisions of the interim rules. A number of these, however, recommended certain additions to the regulations. Each of these recommendations is discussed below.

Control and Eradication of Karnal Bunt

A number of commenters stated that, although it is possible to control the spread of Karnal bunt, it is impossible to eradicate it from the United States,

that no bunt or smut disease of grain crops has been eradicated, that Karnal bunt has likely existed in the United States for a number of years now, and that a program of management should be substituted for the current eradication program. Several commenters stated that focusing on the artificial spread of Karnal bunt ignores the natural spread of the disease, particularly from Mexico into the United States.

As a regulatory agency, we consider eradication a reasonable first objective in dealing with a new quarantine pest. This position has been supported by various industry groups, State departments of agriculture, and officials involved in international trade. The Karnal bunt regulations are intended to prevent the artificial spread of the disease by minimizing the risk of spread of the causal agent to other wheat production areas.

Tolerance Levels for Karnal Bunt

A number of commenters stated that the tolerance level for spores in grain should be a biological zero, not an absolute zero, and that scientists need to determine the number of spores and the conditions necessary to perpetuate the disease. Several commenters stated that the emphasis of the quarantine should be on the risk of spreading Karnal bunt and not on control of the spore, that non-bunted wheat should be certified ''free from'' Karnal bunt if no bunted kernels or only low levels of spores are present, and that ''free from'' status should be accorded to areas where no evidence exists that fields are likely to manifest the disease. One commenter recommended that all fields in which bunted kernels are not found should be released from quarantine. Another commenter stated that *infestation* should be defined in § 301.89–1 as the presence of bunted kernels caused by Karnal bunt, and not include any stage of development of the fungus *Tilletia indica* (Mitra) Mundkur. One commenter stated that APHIS should remove the Karnal bunt quarantine, establish a commercial tolerance for Karnal bunt, and allow the market to provide incentive to the industry to minimize disease spread through price adjustments. Another commenter stated that APHIS should assume that any test that discovers fewer than ten spores is a coincidental contamination.

We are making no changes based on these comments. APHIS does not use a zero tolerance approach to survey and railcar testing. Our test procedures, which were developed in concert with State and industry representatives, provide a reasonable assurance that detecting a spore count of 1 or more in a 50-gram sample will identify levels of Karnal bunt that present a risk of spreading the disease. Because it is the objective of the regulatory measures to prevent the further spread of the pathogen, it is APHIS' policy to accept the limited risk posed by spore counts that might be lower than this level. Although tolerance levels have been established as a quality factor for various fungal toxins that are widespread in the United States, these toxins are of concern only when they reach levels at which they might adversely affect the health of humans or animals. Therefore, their presence below a certain level, while detectable, is not of concern. This is not the case for Karnal bunt, where detectable levels present a risk of spreading the disease.

Characterization of Karnal Bunt

A number of commenters disagreed with our description of Karnal bunt as a ''serious fungal disease.'' One commenter stated that Karnal bunt, at its previous worst known rates of infection of grain in the world, is not strong enough to do any damage to the resultant flour taste, smell, or color. A number of commenters stated that several other grain-related diseases have a greater economic impact than Karnal bunt, and that these diseases are allowed tolerances and are handled by grading techniques within the grain industry. The commenters recommended that such an approach be allowed for Karnal bunt. One commenter stated that the Biological Assessment group in APHIS, Plant Protection and Quarantine, has concluded that *Tilletia indica* represents a high ''Pest Risk Potential'' in the United States, as estimated by internationally recognized pest risk analysis procedures. The commenter stated that other evaluators, using the same standard as that used by APHIS, have judged the pest risk potential of *Tilletia indica* to be low. According to international guidelines, Pest Risk Assessment consists of evaluating the likelihood of a pest's introduction and the consequences of such an introduction. We rate the consequences by calculating the Pest Risk Potential according to five elements that rate a pest's climatic range, host range, dispersal potential, and economic and environmental impacts. As part of a 1995 Karnal bunt Pest Risk Assessment, APHIS concluded that, for the United States, the Pest Risk Potential of the Karnal bunt fungus was high. This rating was objectively based on the determinations that: (1) The Karnal bunt fungus is able to survive in four or more hardiness zones; (2) the Karnal bunt fungus attacks multiple species within a single plant family; (3) the Karnal bunt fungus produces many spores that may be distributed over long distances; (4) the Karnal bunt fungus has the potential to cause yield loss, lower commodity values and result in loss of markets; and (5) the presence of the fungus might trigger control programs with environmental impacts.

We acknowledge that the use of the word ''serious'' in describing Karnal bunt can be open to several interpretations. We believe that the greatest impact of the establishment of Karnal bunt is on the export of U.S. wheat to foreign markets, a $5 billion industry annually. Karnal bunt is a pest of quarantine significance throughout the world and jeopardizes the continued trade of U.S. wheat. However, because we agree that our use of the word ''serious'' has caused some confusion, we do not refer to Karnal bunt as a serious disease in this final rule.

One commenter questioned why the description of Karnal bunt in the definitions in § 301.89–1 did not describe the disease as one ''which is new to or not widely prevalent or distributed within and throughout the United States.'' The commenter said such a description of Karnal bunt appears in the definition of *Karnal bunt* in § 319.59, as established on October 13, 1983. The commenter stated that the modifying phrase implies that the Department acknowledged that Karnal bunt existed in the United States as early as 1983. We do not agree with the commenter's conclusion. It is true that Karnal bunt is described in § 319.59–1 as a disease that is ''new to or not widely prevalent or distributed in and throughout the United States.'' However, that reference to Karnal bunt is included in the ''Foreign Quarantine Notice'' section of title 7 of the Code of Federal Regulations. The wording there is consistent with the statutory language in the United States Code (7 U.S.C. 160) which states that ''in order to prevent the *introduction* into the United States of any tree, plant, or fruit disease or of any injurious insect, new to or not theretofore widely distributed throughout the United States,'' the Secretary of Agriculture may establish *importation* regulations to prevent such introduction. The modifying phrase ''new to and not heretofore widely prevalent or distributed within and throughout the United States'' is used in other importation regulations in 7 CFR part 319, and it does not imply that the disease in question already exists in the United States.

Regulated Articles

Several commenters recommended that the list of regulated articles in § 301.89–2 be expanded. The items recommended for inclusion, the commenters' rationale for the additions, and our responses are as follows:

Rye: One commenter stated that the 1991 APHIS Pest Risk Analysis on Karnal bunt includes rye (*Secale cereale*) as a host of the disease. We are making no changes based on this comment. The 1991 Pest Risk Analysis included rye and several species of grasses that are reported to demonstrate a degree of susceptibility to infection when inoculated (or forced) in the laboratory. Karnal bunt has not been reported on these species under natural conditions.

Seeds and grain of crops other than wheat, durum wheat, and triticale that pass through contaminated facilities or that move out of a regulated area: One commenter stated that seed crops are of particular concern because they may be planted in fields that are subsequently planted with a host crop. Several other commenters stated that stringent restrictions should be placed on the movement of all seed out of quarantined areas. We are making no changes based on these comments. We consider the possible contamination of seed other than wheat, durum wheat, and triticale to pose a negligible risk. The amount of inoculum on non-host seed and the opportunity to infest a host would be small. For non-host seed moving out of a regulated area, the inoculum moving with the seed would originate from a field where a non-host crop was planted and that was destined to be planted with a non-host crop.

Seed crops other than host crops harvested from fields infested with teliospores: One commenter stated that seed crops, especially those seed crops where soil contaminates the harvested seed, could become contaminated with teliospores. The commenter additionally stated that crops such as dry edible beans and soybeans are particularly prone to soil contact and contamination. We are making no changes based on this comment, for the same reasons cited immediately above.

Seed crops other than host crops planted near an infected crop: One commenter recommended that a buffer be required to minimize the risk of contamination from airborne teliospores, especially if any infested fields will be harvested, which creates dusty conditions. Again, we consider the risk of the movement of the Karnal bunt causal agent with seed other than wheat, durum wheat, and triticale to be negligible.

Apiary equipment placed in fields contaminated with teliospores: Several commenters stated that such equipment can carry contaminated soil, and that, additionally, there may be a risk of the bees' disseminating teliospores. We are making no changes based on this comment. We not do not consider the movement of apiaries to present a significant risk of spreading Karnal bunt. Hives are usually not set in the fields.

Animals fed crops susceptible to Karnal bunt: Several commenters noted that animals that have fed on susceptible crops may not have passed all of the feed through their systems when moved, or may transport soil from infected areas. We are making no changes based on this comment. We consider the risk of possible contamination due to animal movement to be negligible. The amount of inoculum moving with the animal would be small, and would have little opportunity to infect a suitable host. In most cases, the animals would be moved to a stockyard, and it is not likely that the manure from the animals at the stockyard would be collected and distributed on a field to be planted with wheat. However, soil from areas where field crops are produced and manure from animals that have fed on untreated or raw wheat, durum wheat, and triticale are regulated articles.

Nursery stock accompanied by soil from contaminated fields: One commenter stated that nursery stock accompanied by soil from contaminated fields should be regulated. We do not consider it necessary to make any changes based on this comment. Soil from areas where field crops are produced is already regulated and, under the Karnal bunt program, is not allowed to be moved.

Any machinery, farm equipment, or means of conveyance that could move soil from areas where field crops are produced: One commenter cited spray and fertilizer equipment used in contaminated fields as potentially contaminated equipment. In establishing the list of regulated articles, it was our intent that any farm equipment that could move soil within or from the regulated area should be regulated. We are therefore revising the list of regulated articles at § 301.89–2(j) of the regulations to refer to used farm tools and equipment.

One commenter stated that the listing in § 301.89–2 of ''soil from areas where field crops are produced'' as a regulated article should be interpreted strictly to include soil that adheres to propagative plant parts, including seeds. We agree with the commenter, and consider the regulations as written adequate to effect such enforcement.

One commenter stated that ''soil'' should not be interpreted to include such materials as dust or road film. We believe the definition of *soil* as set forth in § 301.89–1 of this final rule addresses the commenter's concerns and clarifies our intent. *Soil* is defined in the final rule as ''the loose surface material of the earth in which plants grow, in most cases consisting of disintegrated rock with an admixture of organic material.'' Under this definition, we do not consider dust or road film to be ''soil.''

One commenter recommended that the list of regulated articles in § 301.89–2 be modified as follows: The current listing of ''manure from animals that have fed on wheat, durum wheat, or triticale'' should be changed to ''manure from animals which have been fed untreated or raw wheat, durum wheat, triticale, or byproducts thereof which have tested positive for Karnal bunt;'' ''soil from areas where field crops are produced'' should be changed to ''soil from crop production fields proven to contain Karnal bunt;'' and ''any other product, article, or means of conveyance when an inspector determines that it presents a risk of spreading Karnal bunt due to its proximity to an infestation of Karnal bunt * * *.'' should be changed to ''any contaminated product, article, or means of conveyance when an inspector determines that Karnal bunt contamination exists and the conveyance presents a risk of spreading Karnal bunt* * *.'' We are making no changes based on this comment. We consider a risk to exist in the movement of each of the categories of the regulated articles the commenter suggested relaxing, and that appropriate safeguards are needed based on the level of risk. We do recognize that there is little risk from ''manure from animals that have been fed treated millfeed,'' and are adding this exemption to the regulations.

The list of regulated articles in § 301.89–2 includes soil from areas where field crops are produced. One commenter stated that this listing would unfairly apply to soil from areas where suspect wheat seed was planted, but then was destroyed and not grown to harvest. The commenter stated that the risk from such soil is very significantly less than for soil where the wheat crop was allowed to mature. In this final rule, we continue to consider as a regulated article the soil described by the commenter. We consider it necessary to regulate any article that presents a risk of spreading the causal agent of Karnal

bunt. However, we base the extent of regulation on the level of risk. This rule categorizes areas based on risk and imposes appropriate regulatory actions for each. These risk categories are discussed in this **SUPPLEMENTARY INFORMATION** under the heading ''Regulated Areas.''

One commenter stated that quarantines imposed because of Karnal bunt should affect no crops other than wheat. In conducting the Karnal bunt program, we have focused our regulatory efforts on wheat production activities. However, in some cases, as with the movement of root crops with soil, we consider there to be sufficient risk to warrant regulatory activity.

One commenter stated a connection should be made in the regulations between all regulated articles and Karnal bunt host crops. We do not agree that the rationale for regulating an article should rest solely on whether it had direct contact with Karnal bunt host crops. A number of the articles we are regulating pose a risk of spreading Karnal bunt because of the danger that soil on the article from the regulated area might transmit the Karnal bunt causal agent.

One commenter recommended, without explanation, that several articles be removed from our list of regulated articles. We are not certain of the commenter's rationale for recommending the removal of the articles in question, and continue to consider it necessary to regulate those articles listed in § 301.89–2.

Actions of Individual States

One commenter stated that the regulations should specifically provide that infested articles moving under limited permit may do so only after concurrence by the destination State and other States through which the regulated article would traverse. We are making no changes based on this comment. As part of the Karnal bunt program, we are not allowing grain that tests positive for Karnal bunt to move out of the quarantined area. Other contaminated articles must be cleaned and sanitized before such movement. We are notifying destination States of grain that has tested negative and is moving under limited permit to approved mills. We do not believe there is sufficient risk involved with the controlled movement of these articles to warrant additional restrictions on their movement.

Several commenters recommended that the Department prohibit individual States from imposing restrictions on Arizona agricultural products that, in effect, preempt APHIS standards. State regulations cannot preempt APHIS' regulations. While, as a practical matter, the Department cannot prohibit States from imposing restrictions on agricultural products, affected persons could assert Federal preemption as a legal basis for seeking relief from any State regulation that is inconsistent with APHIS' regulations.

Restrictions on Movement

One commenter stated that the provisions in § 301.89–5 regarding the issuance of a certificate or limited permit should specifically state that any Karnal bunt potential host crop grown on land with a history of infestation with Karnal bunt teliospores is not eligible for certification. We are making no changes based on this comment. In § 301.89–4 of this final rule, we prohibit the planting of host crops in fields that tested positive and in fields planted in 1995 with seed known to be contaminated with Karnal bunt.

Several commenters recommended that no commercial seed be allowed to leave a quarantined area under any conditions. We are making no changes based on this comment. The regulations already prohibit the movement of commercial wheat, durum wheat, and triticale seed from the quarantined area. We consider risk from the possible contamination of seed other than from host crops to be negligible. With regard to commercial seed, the regulations in § 301.89–6 of this final rule set forth the criteria under which a regulated article may move from a regulated area, accompanied either by a certificate or a limited permit. Commercial seed does not meet the criteria for movement outside the regulated area either with a certificate or a limited permit, in that the commercial seed would, among other things, need to: (1) Be tested free of Karnal bunt; (2) have been grown, produced, manufactured, stored, or handled in a manner that would prevent infestation or destroy all live stages of Karnal bunt; or (3) have been treated in accordance with approved methods. Current testing and treatment procedures do not exist for large quantities of commercial seed intended for planting outside the regulated area that would ensure such seed could be certified free of Karnal bunt. To be eligible for a limited permit, the risk of the seed spreading Karnal bunt would have to be eliminated by the destruction of the pathogen of Karnal bunt, or be mitigated by specified handling, utilization, or processing. Commercial seed to be used for planting would not meet these criteria.

One commenter recommended that the regulations require that any wheat that is to be used for seed be harvested with a fumigated combine and be transported in vehicles that have been fumigated, and that the grain be thoroughly tested for spores prior to being certified for planting. We are making no changes based on this comment. We have developed sanitization and testing protocols for seed moving within the area. Additionally, this final rule requires that all wheat seed to be planted within the regulated area be sampled and tested for Karnal bunt, and, for seed originating in a regulated area, treated prior to planting.

A number of commenters opposed what they called a ''strict'' quarantine regarding Karnal bunt in the southwest United States due to its potential impact on the movement of germplasm, winter nurseries, and ''off-season'' increases for spring and winter cereals used in many northern States. We understand the importance of the southwest United States in wheat breeder research. However, we consider the movement of seed for planting a high risk activity and currently do not allow its movement outside the regulated area, except for limited quantities of research seed. We are allowing germplasm and research seed to move under conditions involving testing, treatment (described below), and subsequent monitoring. We will continue to work with researchers and industry to develop protocols and treatments that will allow movement of seed to resume.

In this final rule, we are setting forth an approved treatment for seed used as germplasm or for research purposes. To be eligible for movement, the seed must be treated with a 1.5 percent aqueous solution of sodium hypochlorite (=30 percent household bleach) containing 2 ml. of Tween 20™ per liter agitated for 10 minutes at room temperature followed by a 15-minute rinse with clean, running water and then by drying, and either: (1) With 6.8 fl. oz. of Carboxin thiram (10 percent+10 percent, 0.91+0.91 lb. ai./gal.) flowable liquid and 3 fluid ounces of pentachloronitrobenzene (2.23 lb. ai./gal.) per 100 pounds of seed; or (2) with 4.0 fluid ounces of Carboxin thiram (1.67 + 1.67 lb. ai./gal.) flowable liquid and 3 fluid ounces of pentachloronitrobenzene (2.23 lb. ai./gal.) per 100 pounds of seed.

Several commenters urged the Department to develop specific protocols to outline procedures for shipment of seed within and outside of quarantined areas, seed treatment requirements, certification requirements, and the movement of germ plasm. One commenter stated that

this protocol should address germ plasm, foundation, registered, certified, and uncertified seed. We have developed protocols for testing, treatment, and movement of commercial seed within the regulated area and limited quantities of research seed out of the regulated area. (For more information regarding these protocols, please contact the individual listed in this final rule under **FOR FURTHER INFORMATION CONTACT.**) Currently, however, movement of commercial seed to destinations outside the regulated area is considered a high risk and adequate treatment and safeguard conditions have not been developed.

One commenter recommended that the regulations allow seed infected with Karnal bunt that is not to be used for propagation to be used for feed, milling, or other non-propagative purposes. We agree with the commenter that the seed described can be safely used under certain conditions. We are continuing to cooperate with the industry, States, and export partners to develop additional options for grain testing positive.

One commenter stated that because movement of grain to mills and/or export destinations is always to expedite the end use of the grain, such transport of byproducts and grain with low spore numbers should not be an issue. Another commenter stated that as long as wheat and wheat byproducts infected with Karnal bunt are segregated from other wheat, and the identity of the wheat and wheat byproducts is preserved through the marketing chain, such wheat and byproducts should be allowed to move to end users willing to comply with specified sanitary precautions. During the 1996 harvest, we were able to provide a means to move wheat from regulated areas with appropriate safeguards and to minimize the risk to other wheat producing areas. Based on survey information from the 1996 harvest, we are removing requirements for the treatment of millfeed and the sanitization of equipment for some parts of the regulated areas.

One commenter stated that APHIS should in some way encourage grain ports to handle wheat grown in quarantined areas. Another commenter requested that a procedure be developed to allow wheat from Arizona to move to international ports. Currently, APHIS, the State of Texas, and the wheat industry are cooperating to move grain from quarantined areas to ports for export.

Treatments

Several commenters said that no treatment for Karnal bunt should be listed in the regulations until efficacy data has been compiled on ''real-life'' applications. One commenter expressed concern that the regulations include a treatment for millfeed when, according to the commenter, efficacy data for heat treatment for millfeed does not exist. We agree with the commenters that approval of treatments should be based on empirical data. The treatment options set forth in our regulations are based on the latest scientific literature and efficacy data available.

One commenter recommended that the sodium hypochlorite treatment provided for in the regulations specify that the treatment solution must remain in contact for 15 minutes with the surface to be decontaminated. We are making no changes based on this comment. The treatment set forth in the regulations requires that the equipment or site not be washed down until 15 minutes have passed.

Several commenters stated that treatment of equipment with sodium hypochlorite should not be included as an approved treatment, due to the likelihood of corrosion of the equipment being disinfected. Because this treatment may be corrosive to the equipment being disinfected, we advise in the treatment instructions to wash the equipment thoroughly after application in order to minimize corrosion. We are testing alternative, less potentially corrosive, treatments for their effectiveness on the pathogen. However, we have not found any less corrosive, effective treatment to date.

The regulations regarding the treatment with sodium hypochlorite call for ''a solution of sodium hypochlorite mixed with water applied at the rate of 1 gallon of commercial chlorine bleach (5.2 percent sodium hypochlorite) mixed with 2.5 gallons of water.'' One commenter stated that it is possible that not all commercial chlorine bleaches are 5.2 percent sodium hypochlorite and that, therefore, only the final necessary treatment solution strength should be set forth. We agree with the commenter that it is the final percentage of sodium hypochlorite, after being mixed with water, that is important. We are therefore specifying in this final rule that the treatment in question requires wetting all surfaces to the point of runoff with a solution of 1.5 percent sodium hypochlorite. Because we believe that most users will disinfect with household bleach with 5.2 percent sodium hypochlorite, we are retaining in the treatment description, as an example, the suggested mix of ''1 gallon of household chlorine bleach (5.2 percent sodium hypochlorite) mixed with 2.5 gallons of water.''

One commenter recommended that a critical temperature be specified for treatment with sodium hypochlorite or steam, and that it be required that the surfaces treated be thoroughly wetted. The commenter also stated that the fumigation treatment in § 301.89–11(a)(4) be revised by adding tarpaulin fumigation for small acreages. With regard to both the sodium hypochlorite and steam treatments, the regulations require the surfaces treated to be wetted thoroughly to the point of runoff. With regard to the sodium hypochlorite treatment, the temperature is not critical. However, we agree that a critical temperature at the point of contact should be specified for treatment with steam. Therefore, we are requiring in § 301.89–13 of this final rule that, for steam treatment, a critical temperature of 170 °F be reached at the point of contact. With regard to tarpaulin fumigation, we are making no changes based on the comment. We are still developing a soil treatment with methyl bromide for the regulated area.

One commenter recommended as a treatment for used bags, sacks, and containers soaking for 15 minutes in 30 percent chlorine bleach (5.2 percent hypochlorite). We have been unable to find any literature on this treatment and are not endorsing it at this time. However, we do consider effective, and are setting forth in § 301.89–14 as an approved treatment for bags, sacks, and containers used for infected grain or seed fumigation with methyl bromide at the dosage of 15 pounds/1000 cubic feet for 96 hours.

One commenter stated that only storage bins that have held bunted kernels and only combines and other equipment and means of conveyance found to be infested with bunted kernels should have to be sanitized. We disagree with the commenter, due to the risk of the spread of Karnal bunt by spores.

One commenter stated that efficacy data for treatment methods applicable to custom harvest equipment has not been provided and, therefore, that custom combines used in fields infected with Karnal bunt should be prohibited from moving out of the quarantined area. Several other commenters also recommended such a prohibition, due to what the commenters described as the impossibility of ensuring that all spores on custom combines have been destroyed by the currently approved treatment. Several commenters recommended that the Department purchase a number of combines to be used, then left, in the regulated area. We are making no changes based on these comments. We have specified procedures for cleaning and sanitizing

equipment such as combines and consider the treatment, when properly monitored, to be effective.

Several commenters stated that, although the regulations allow for several methods of disinfecting equipment with regard to Karnal bunt, fumigation with methyl bromide is the only completely effective way to sanitize a combine. We are making no changes based on these comments. We have specified procedures for cleaning and sanitizing combines, and believe that the treatment with sodium hypochlorite, when properly monitored, to be effective.

Several commenters stated in general that available methods for ''sanitizing'' equipment for Karnal bunt are costly and not totally effective. One commenter described the hot detergent solution treatment as ''essentially worthless.'' The commenter also stated that the need to moisten areas treated with methyl bromide in some cases makes such treatment impractical, such as in the treatment of grain elevators and grain augers. We are making no changes based on these comments. We set forth treatment options based on the best information available from scientists familiar with Karnal bunt control. Procedures were developed to facilitate the application of treatments. However, we agree that not all treatments are equally effective in all situations. Therefore, we are adding language to § 301.89–13 of this final rule to provide that the treatment option chosen must be the one specified by an inspector if that treatment is deemed most effective in a given situation.

One commenter stated that treatment dosage of methyl bromide specified in the regulations is greater than that allowed by the Environmental Protection Agency. The commenter urged APHIS to request the necessary waivers to allow the use of methyl bromide as a fumigant for the duration of the quarantine. We have obtained the appropriate exemptions and permits for all the chemicals and treatments used in the Karnal bunt program.

Section 301.89–11(b) of the Karnal bunt regulations set forth as an approved treatment for straw/stalks/seed heads for decorative purposes fumigation with methyl bromide at the dosage of 15 pounds/1,000 cubic feet for 96 hours. One commenter stated that APHIS' import regulations for wheat diseases in 7 CFR 319.59 exempts from regulation ''straw without heads that has been processed or manufactured.'' The commenter stated that, for consistency and because no pest risk has been identified with this material, the Karnal bunt regulations should be revised to include this exemption. We consider the commenter's point a valid one. Section 319.59 exempts from regulation straw, with or without heads, that has been processed or manufactured for use indoors, such as for decorative purposes, or for use as toys. In § 301.89–14 of this final rule, we provide that straw need not be treated for movement outside the regulated area if it has been processed or manufactured prior to movement, and is intended for use indoors. Another commenter recommended that the dosage of methyl bromide be 5 pounds/1,000 cubic feet, rather than 15 pounds. We have no data indicating that 5 pounds is an effective dosage and are making no changes based on this comment.

One commenter recommended that equipment moved from a regulated area be allowed to do so only under limited permit, rather than under a certificate. Another commenter stated that, because of the difficulty in assuring effective decontamination of conveyances carrying infected articles, movement of such conveyances from quarantined areas should be prohibited. We are making no changes based on this comment. We have developed specific procedures for cleaning and sanitizing equipment and conveyances, and believe that, when properly monitored, the treatments are effective.

Several commenters recommended that all requirements for the sanitization of farm equipment, conveyances, and grain elevators be removed from the regulations. Another commenter recommended that equipment coming from quarantined fields be required to be cleaned but not sanitized. One commenter recommended that only those articles that have come in contact with wheat or soil that has tested positive for Karnal bunt be required to be sanitized. One commenter stated that it was unrealistic and unachievable to restrict the movement of any equipment or materials that come into contact with the soil on contaminated fields. One commenter questioned the requirement to wash soil from equipment in light of what he perceived as the greater risk presented by windborne teliospores. Several commenters stated that, due to what the commenters considered the impossibility of the eradication of Karnal bunt, equipment moving within a quarantined area from a contaminated field should be required to be cleaned free of soil, but not be required to be sanitized. We acknowledge that the possibility of the windborne spread of teliospores within the regulated area can counteract the beneficial effects of sanitizing equipment. Because of the potential windborne spread of Karnal bunt, and also because of the possibility that equipment and means of conveyance may have been moved from infected fields prior to the initial detection of Karnal bunt, we are removing cleaning and sanitization requirements for movement within the regulated area, except for movement from fields that test positive for Karnal bunt during the 1996–97 crop season. Equipment moving outside the regulated area must still be cleaned and sanitized prior to movement. Additionally, we are still requiring the cleaning and sanitization of contaminated elevators, so that grain testing negative that is moving into the elevator remains uncontaminated.

Several commenters recommended that custom harvesting equipment be prohibited from movement from a quarantined area, or, at the least, that an effective monitoring program be implemented to assure that only properly certified equipment leaves the quarantined area. We agree with the commenter that the movement of custom harvesting equipment must be closely monitored, and we have developed a system to monitor the sanitization and movement of equipment from the regulated area.

In § 301.89–11 of the regulations (§ 301.89–13 of the August 2, 1996, proposed rule), paragraph (a)(2) lists as an approved treatment ''applying steam to all surfaces to the point of runoff.'' One commenter stated that the effectiveness of this treatment would be doubtful, because the regulations set forth no requirement for the ''removal of material'' or for a minimum surface temperature. We disagree that the regulations do not require cleaning. Section 301.89–11 of the regulations (301.89–13 of this final rule) requires cleaning by removing all soil and plant debris, followed by disinfection with one of the required treatments.

In § 301.89–11 of the regulations (§ 301.89–13 of the proposed rule), paragraph (a)(3) lists as an approved treatment ''cleaning with a solution of hot water and detergent, under high pressure (at least 30 pounds per square inch), at a minimum temperature of 180 °F.'' One commenter stated that 30 pounds per square inch is not considered high pressure and that 300 pounds per square inch would be more appropriate. The commenter also expressed reservations about the effectiveness of the treatment without the use of a fungicide. We consider the treatment to be effective when used and monitored appropriately. However, in order to avoid confusion as to the meaning of ''high pressure,'' we are specifying only that the cleaning

solution must be applied with pressure of at least 30 pounds per square inch.

One commenter recommended that requirements for the sanitization of equipment be made gradually less stringent over the 5-year period following the establishment of a quarantine. In our August 2, 1996, proposed rule, we proposed to make less stringent the cleaning and sanitization requirements within regulated areas, and to require cleaning and sanitization of equipment only when moving from a regulated area. In this final rule, we are requiring cleaning and sanitization of equipment only when moving from a regulated area, and in those cases where equipment is moved from a field that tests positive for Karnal bunt during the 1996–1997 crop season. As we obtain more data, we will consider other modifications to the sanitization requirements.

Recommended Regulatory Actions

One commenter stated that allowing a Karnal bunt host crop to be mature and harvested from a field known to be infested with Karnal bunt teliospores or from a field planted with seed infected with Karnal bunt allows for the possibility of teliospores being produced in the resulting crop that would re-infest the soil in the field and potentially be blown to other fields. This commenter and several other commenters recommended that crops from infested fields be destroyed. We are making no changes based on these comments. Due to currently available survey techniques, we cannot determine whether a field is infested until the crop is sampled and tested at harvest. In this final rule, we are prohibiting the planting for the 1996–97 crop season of host crops in fields that are known to be infested.

One commenter stated that once wheat shown to be infected is destroyed in the field, the field should be burned and plowed to destroy the spores. Then, the field should immediately undergo a soil test for the presence of live spores. If no live spores are found, the field should be considered clean and no further action should be necessary. We are making no changes based on this comment. There are scientific reports indicating that teliospores are carried on wind currents caused by burning, and that the eradicative measure may actually promote the spread of Karnal bunt. Also, we do not have an effective methodology for testing soil at this time.

One commenter stated that the regulations should not allow the burning of sacks, bags, and containers used for infected grain or seed as a treatment option, due to the possibility of teliospores being spread by the burning. As discussed above, we agree that burning is not an appropriate treatment measure, and such an option is not set forth in the regulations.

Several commenters stated that the ideal eradication scenario would be to prohibit host crop production in the regulated area for a minimum of 5 years. We are making no changes based on this comment. Although we agree that the prohibition suggested by the commenter would be an effective eradication technique, we believe there are other effective measures that are less disruptive to farmers and the wheat industry within the regulated area.

One commenter requested that, in order to restore the integrity of grain produced in Arizona, APHIS assure the domestic industry and international markets that the 1996 Arizona wheat crop would be thoroughly tested prior to shipment. Several commenters recommended that no preharvest testing be done, except for the most suspicious fields. We consider adequate testing integral to the Karnal bunt program. In 1996, all grain in the Karnal bunt program areas was tested twice prior to movement. In 1997, under § 301.89–6 of this final rule, all grain in regulated areas must again test negative twice before being moved from a regulated area, and one of these tests must occur at the means of conveyance or storage facility immediately prior to movement. We consider it necessary to test all grain moving from a regulated area, because some fields that will be planted with wheat in the 1996–97 crop season were not tested in 1996.

One commenter recommended that, due to the possibility of spillage, open trucks or trailers transporting infected grain, even those covered with a tarpaulin, be prohibited from leaving a quarantined area. We are making no changes based on this comment. As noted, only grain that has tested negative for Karnal bunt twice is eligible for movement out of the regulated area. Additionally, the provisions of § 301.89–6 this final rule regarding movement from the regulated area provide that an article to be moved under limited permit must be moved to a specified destination for specified handling, utilization, or processing. In the case of grain from where infested fields may occur, this means movement only to approved mills under specific sanitation and safeguard conditions.

One commenter objected to the provision in § 301.89–5(c) that states that an inspector shall issue blank certificates and limited permits to a person operating under a compliance agreement. The commenter requested that such documents be issued only by Federal or approved State plant regulatory officials. We are making no changes based on this comment. APHIS and State cooperators do not have the resources to be present when each shipment or regulated article is moved. However, the compliance of persons operating under compliance agreement is monitored through inspections of facilities and equipment, observation of procedures, and review and accounting of documents.

Calculation of Spore Prevalence

One commenter stated that APHIS is incorrect in concluding that the detection of one spore in a railcar sample represents the presence of close to 2 million spores in the railcar. The commenter stated that subsequent tests of the railcar sometimes detect no further spores. Our wheat testing program is basic to determining the actions appropriate to controlling the spread of the Karnal bunt pathogen. We view the detection of Karnal bunt teliospores in a sample from a qualitative, not a quantitative, standpoint. We recognize that spores may not be evenly distributed in a railcar. Nonetheless, we consider the detection of teliospores as an adequate method to determine whether there is a risk of spread of Karnal bunt.

Management of Karnal Bunt

Several commenters recommended that an eradication program be replaced with a management program to potentially include the following: (1) Planting clean, fungicide-treated seed; (2) requiring crop rotations that include non-host crops; (3) using a later planting date to force crop heading in central Arizona into a drier period of the winter; (4) applying foliar fungicides on seed fields if conditions indicate a risk of Karnal bunt infection; (5) implementing post-harvest testing of seed to detect field infections of Karnal bunt; and (6) using varieties of grains resistant to Karnal bunt. At this time, we will continue to contain and control this disease to attain our goals of (1) protecting other wheat producing areas of the United States, (2) protecting and maintaining export markets, and (3) providing as many options as possible to wheat producers within the impacted areas. However, we consider the recommendations of the commenter good management techniques. We are requiring in this final rule the use of fungicide-treated seed for planting if the seed originated in a regulated area and post-harvest testing. We are also examining the feasibility of foliar

fungicides and are exploring the use of more resistant varieties of wheat.

One commenter stated that if widely scattered areas in the United States are found to have incidental Karnal bunt spores, such areas may need to be put under ''observation,'' ''investigation,'' or ''restriction,'' but that ''quarantine'' may be counterproductive. APHIS is currently conducting activities to control and contain the disease within the regulated area. In addition, we are conducting a national survey to determine if the disease exists in other portions of the United States. If we find Karnal bunt in additional areas, we will review the available data and take the most appropriate actions consistent with our goals to protect other wheat growing areas, protect export markets, and provide as many options as possible to growers and industry impacted by our actions.

Non-Host Crops

One commenter stated that the small amount of soil present on lettuce, cabbage, and onions poses a minimal threat of spreading spores to other fields. Several commenters opposed the quarantining of crops other than wheat, rye, and triticale. Several commenters stated that the production of non-host crops such as root crops, onions, and ornamentals should not be regulated merely because of the possibility of the movement of soil or soil residues. The commenter stated that the production of these crops poses a negligible risk of spreading Karnal bunt. Another commenter recommended that standards for ''free from soil'' be developed for the unrestricted movement of low risk crops from quarantine areas. We are making no changes based on these comments. We consider the risk of the spread of Karnal bunt through soil to be sufficient to require cleaning of non-host crops prior to movement outside the regulated area, or, alternatively, to require movement under limited permit to facilities that will remove the soil from the crops. Because cleaning root crops and other commodities is a normal practice prior to sale, we do not believe that handling and disposal of the soil in an appropriate manner will cause undue burden.

One commenter expressed concern that the sanitization treatments provided will in most cases damage the fruit or vegetable crop beyond marketability. We are making no changes based on this comment. Under the regulations, fruits and vegetables need only to be free of soil. Typically, fruits and vegetables are cleaned at harvest or at a packing facility. There should be no additional damage as a result of the requirement to remove soil from root crops and other vegetables and fruit.

One commenter stated that the regulations should state that soil associated with certain commodities (i.e., nursery stock, turf, etc.) from a positive field in which a host crop has been grown, may not be moved from that field unless it has been treated, tested, and found to be negative. However, the commenter recommended that other types of soil, such as soil attached to fruits or vegetables growing on top of the ground and soil adhering to equipment, boxes, bags, etc, as a result of their being set on the ground should not be regulated. We are making no changes based on this comment. We consider the risk associated with soil from a quarantined area merits regulation and appropriate mitigative measures.

One commenter stated that in the case of New Mexico, where the commenter said growers plowed down all known wheat acreage planted with contaminated seed, and no Karnal bunt was detected on mature wheat, establishing requirements to prevent the movement of soil and plant debris on equipment and vegetable crops is excessive. We are making no changes based on this comment. We consider a risk to exist with the movement of soil on equipment and vegetable crops out of the regulated area.

Calculation of Risk

One commenter stated that the Department should conduct a risk analysis on each regulated article to determine if the risk is ''significant,'' and regulate only those articles posing a significant risk. Several commenters said the Department's analysis of the risk of a Karnal bunt outbreak from untreated millfeed showed the risk to be negligible. One commenter said that the Department had stated that the chance of Karnal bunt spreading from a quarantined area through Karnal-bunt-negative millfeed was approximately 1 in 5,556 years, that the Department considers this a ''moderate'' rather than a ''significant'' risk, and, therefore, that millfeed should not be a regulated article. We are making no changes based on this comment. APHIS' estimate that one outbreak might occur every 5,556 years was specific to the situation where grain is shipped from anywhere in the quarantine area to a mill outside the quarantine area and the millfeed is not treated. This scenario was one of 17 scenarios presented by APHIS in formal risk assessments on Karnal bunt. According to APHIS' current guidelines, this constitutes a ''medium likelihood of spread'' (as opposed to a moderate risk). The estimate of 5,556 years—and estimates for the likelihood of an event in general—do not constitute a measure of ''risk''; 5,556 years was APHIS' estimate for the likelihood that Karnal bunt would spread under these conditions. By definition, estimates of the risk incorporate both the likelihood of an event (in this case, spread of Karnal bunt) and the severity of the consequences should Karnal bunt spread (e.g., economic and environmental impacts). When a decision is made about what is an acceptable level of risk, both the likelihood of an event (e.g., spread of Karnal bunt once every 5,556 years as a result of this particular type of shipment) and the severity of the consequences (e.g., loss of export markets for United States wheat) must be considered. The risk of each type of proposed action must then be considered along with (e.g., added to) the risk posed by other proposed or planned actions. The risk posed by these shipments was determined to present a level of risk that was unacceptable.

One commenter stated that the potential establishment of Karnal bunt in an area outside the infested area from wheat grain intended for milling for human consumption or processing for animal consumption was judged by APHIS and the University of California to be remote—i.e., in the order of magnitude of 1 in 1 million to 1 in 5 million. We believe it is misleading to simplify the results of the analyses cited. The estimate made by the University of California (UC) was compared with the analogous estimate made by APHIS (i.e., Scenario No. 2C, Table 4a, USDA, May 28, 1996). The methodology used by UC and APHIS were similar in some respects but significantly different in other respects. Most notably, APHIS performed a probabilistic risk assessment with a probabilistic result (i.e., the estimate provided by the assessment was a probabilistic range of values for the likelihood of spread). Because the UC assessment was not a probabilistic assessment, only a single number was reported (i.e., the spread of Karnal bunt once every 1.05 million years) and the scientific uncertainty about the biology and movement of Karnal bunt was not considered. APHIS' assessment accounted for the uncertainty regarding the biology of Karnal bunt. The estimate used by APHIS to make decisions regarding regulation for this type of shipment was, and continues to be, once

every 2,119 years (the 95th percentile of the estimated likelihood of spread). Because the UC and APHIS methodologies were different, the results could not be compared directly. However, UC and APHIS essentially reached the same conclusion using different means, and APHIS has not changed its estimate for the likelihood of spread.

One commenter recommended that APHIS conduct an evaluation of the risk posed by Karnal bunt to the U.S. wheat industry and its international markets. APHIS completed a risk analysis in 1991 that addresses the consequences of the establishment of Karnal bunt. Information regarding the analysis can be obtained from the person listed in this final rule under **FOR FURTHER INFORMATION CONTACT**.

Definitions

One commenter stated that the definition of *soil* in § 301.89–1 should be consistent with the definition established in the 1994 ''North American Plant Protection Organization Position Paper on Soil Movement.'' In that paper, *soil* is defined to mean ''the loose surface material of the earth in which plants grow, in most cases consisting of disintegrated rock with an admixture of organic material.'' We agree with the commenter and have revised the definition of soil in this final rule.

One commenter stated that § 301.89–1, ''Definitions,'' defines the terms *farm tools, mechanized cultivating and mechanized harvesting equipment, movement, soil,* and *soil moving equipment* in their generic sense, i.e., without reference to the connection they might have to host crops. The commenter stated that by using such definitions, the terms become all inclusive, even though, according to the commenter, equipment such as harvesting equipment specific to commodities other than wheat pose little risk of bearing spores of Karnal bunt. The commenter recommended that the definitions be revised to make such a connection to host crops, or, alternatively, that the term ''used'' that modifies certain regulated equipment in § 301.89–2 be tied to the risk associated with host crops for Karnal bunt. We are making no changes based on this comment. We consider there to be a risk that the pathogen will be moved with soil adhering to farm equipment and tools. We consider cleaning and sanitization of these articles to be necessary prior to movement from the regulated area, and prior to movement from fields that test positive for Karnal bunt during the 1996–97 crop season.

Scientific Resources

Several commenters stated that, in establishing the Karnal bunt regulations, APHIS did not sufficiently enlist the expertise of specialized scientific personnel. One commenter recommended that a representative scientific panel be appointed to advise the Department on modification of the quarantined areas. We disagree with the commenters' contention. In developing program procedures, the Department has solicited input from all interested parties. In addition, APHIS has requested that informally structured groups such as the Karnal bunt Science Panel meet to review and clarify technical issues. Also, APHIS is exploring the possibility of establishing a formal Karnal bunt advisory committee.

Regulated Areas

Section 301.89–3(c) provides that the Administrator may include noninfected acreage within a regulated area due to its proximity to an infestation or inseparability from the infected locality for regulatory purposes. One commenter stated in general that this provision gives the Administrator unnecessarily broad powers, and in particular that the maximum regulated area in New Mexico should be those fields previously planted with contaminated wheat seed. We disagree. Due to the movement of equipment, the potential natural movement of the causal agent by wind, and incomplete information on seed distribution for planting, we consider the regulation of larger areas appropriate until additional survey information is available.

Several commenters stated that areas such as Yuma County, AZ, should not be quarantined. One of these commenters stated that natural conditions in that area do not favor the establishment of Karnal bunt. Several commenters stated that, as of the date the comments were written, extensive testing in Yuma County had shown no Karnal bunt infestation. Several commenters questioned why Arizona was the only State to be quarantined in its entirety for Karnal bunt. One commenter requested that the quarantine of Hudspeth County in Texas be reduced to ''more accurately reflect the affected areas.'' APHIS has revised the quarantine boundaries in Arizona, California, New Mexico, and Texas, including Hudspeth County, to include only those areas that contain wheat fields that are associated with contaminated wheat seed or that have tested positive. The Yuma area will remain within the regulated area because it contains fields that tested positive during the preharvest survey.

Several commenters stated that the same quarantine restrictions have not been applied to areas with similar Karnal bunt conditions in different States, requested that the specific scientific standards for quarantine be publicly stated and applied equally, and that an explanation be provided of why certain areas where Karnal bunt has been determined to exist or that are suspect for the existence of Karnal bunt have not been quarantined. At any indication of Karnal bunt, APHIS and State cooperators respond immediately to identify potential infestations. APHIS has traced contaminated seed to several locations outside the regulated areas. In some cases, the seed had not been planted but was still in storage. In those cases, the seed was destroyed and the facilities were cleaned and sanitized. Contaminated seed was traced to several small research plots, where the fields were plowed down and fumigated. In some instances, despite extensive testing and traceback efforts, we have not been able to confirm that contaminated seed was either distributed or planted in the area in question. We are continuing additional monitoring activities in those areas. We consider such measures sufficient to ensure that Karnal bunt is eliminated from the site without the unnecessary imposition of a geographical quarantine.

Several commenters recommended a reduction or modification of the quarantined area in California. According to the commenters, as of the date the comment was written, no samples of grain produced in the Imperial Valley of Imperial County, CA, had been proven to have Karnal bunt. The commenters recommended that the Imperial Valley be removed from the list of quarantined areas (with the possible exception of those fields known to be planted with infected seed). One commenter recommended that the current quarantine in Imperial County be replaced with a program of wheat seed inspections, fungicidal treatment of wheat seed, testing of outgoing shipments of wheat, and preharvest sampling. One commenter recommended that those townships in Imperial County where Karnal bunt has been found to be present be monitored during the coming year. The commenter stated that a formal quarantine was unnecessary because Karnal bunt can be dealt with in crop production and in marketing in the same fashion as with other smut and bunt diseases that occur in California. We disagree with the commenters that the Imperial Valley should be released from regulation. This

area received seed that was contaminated with Karnal bunt. In addition, composite samples taken from grain originating in the Imperial Valley have tested positive. However, we acknowledge that no individual field in the Imperial Valley has tested positive and are, therefore, categorizing the Imperial Valley as a surveillance area in this final rule. (Surveillance areas are discussed in more detail in this **SUPPLEMENTARY INFORMATION** under the heading ''Regulated Areas.'')

One commenter recommended that APHIS quarantine wheat lots, rather than quarantine States or counties according to geographical boundaries. We are making no changes based on this comment. However, in APHIS' current program, eligibility for movement is determined by test results of grain from either individual fields or means of conveyance.

One commenter recommended that the Department take responsibility for the movement of regulated articles out of the regulated area, and that States be responsible for movement within regulated areas. We are making no changes based on this comment. APHIS and State cooperators work together to provide an integrated program, because movement outside the regulated area is dependent on program activities conducted within the regulated area.

One commenter recommended that growing areas be removed from regulation if they show less than 1 percent positive results in the pre-harvest survey. The commenter also recommended that regulated areas be delineated using geographic boundaries, i.e., highways, roads, and rivers, rather than county boundaries. We do not agree that regulation of an area should be dependent on whether Karnal bunt is detected in some specified percentage of fields tested. However, in this final rule, based on 1996 survey data, we have modified the regulations by categorizing areas based on the presence or not of fields that tested positive for the pathogen. The areas are regulated based on their relative risks. Areas with positive fields are of greater risk because the pathogen has been shown to exist and may be spread locally by wind or the movement of equipment. This would occur independently of whatever percentage of the fields are positive. We are using boundaries other than county lines to describe the regulated areas.

Several commenters stated that, in those areas where only several fields have been found to be infected with Karnal bunt, only those fields testing positive should be quarantined, not the entire area. Another commenter recommended that, using traceback survey and pre-harvest sampling results, only those areas where an infestation has been found should be subject to quarantine. One commenter stated that negative preharvest testing of seed produced in a quarantined area should be grounds for allowing that seed to move from the quarantined area. One commenter recommended that quarantined areas be limited to those wheat-growing areas where Karnal bunt is suspected and projected by APHIS. We agree with the commenters that, based on survey data, certain areas present a greater risk than others, and, in this final rule, we have created criteria for two categories of areas within the regulated area: (1) Restricted areas which include fields testing positive, and (2) surveillance areas where no fields testing positive are located. We discuss these areas in greater detail in this Supplementary Information under the heading ''Regulated Areas.'' Grain moving from restricted areas will continue to move under limited permit with safeguard conditions. Grain from surveillance areas may move under certificate without restriction.

Services of Inspectors

Section 301.89–8 of the regulations sets out the procedures for requesting the services of an inspector by persons requiring certification or other services. Paragraph (a) of that section requires that 48 hours notice be given to the inspector before the services are needed. One commenter suggested that, instead of the mandated 48 hours notice, provisions for assembly and inspection of regulated articles be set through compliance agreements. We do not believe that specifics concerning requirements for APHIS lead-time notification are appropriate for a compliance agreement. However, we recognize the need for a quicker response time during harvest, and, therefore, are revising the regulations by reducing from 48 hours to 24 hours the time required for notification prior to the provision of APHIS services.

Section 301.89–10 provides that the services of an inspector during normal business hours will be furnished by APHIS without cost, but that the user will be responsible for all costs and charges arising from services provided outside of normal business hours. One commenter stated that, during harvest season, ''normal business hours'' are virtually around the clock, and that the Department should be responsible for all costs and charges arising from inspection and other services provided at any time. During the 1996 harvest, APHIS did not charge for services conducted outside ''normal'' business hours. We expect to continue this policy for most activities in the 1997 crop season.

Import Requirements

Several commenters stated that the restrictions regarding produce from Mexico because of Karnal bunt are less stringent than those established by the domestic quarantine regulations, and inquired whether the two sets of restrictions would be made consistent. We disagree with the commenters' statement. Wheat products and soil from Mexico are restricted entry into the United States to prevent the introduction of insect pests and plant diseases such as Karnal bunt.

Analysis of Economic Impact

Several commenters stated that the Department has not published an assessment of the economic impact of the Karnal bunt quarantine. Another commenter stated that the long-term economic costs of maintaining the current Karnal bunt quarantine would outweigh the amount of foreign export business that might be temporarily lost if the Karnal bunt regulations were removed. We are currently in the process of assessing the economic impact of the Karnal bunt quarantine, and will publish this assessment in the Federal Register upon its completion.

Comment Period

One commenter stated that the 60-day comment period provided for our interim rule establishing the Karnal bunt regulations allowed insufficient time for interested parties to compile sufficient information to comment. Although the comment period for the interim rule establishing the regulations was initially to end on May 28, 1996, that period was extended until September 3, 1996. We consider this sufficient time for interested parties to have commented on the interim rule.

Comments on Proposed Rule, Docket No. 96–016–10

Several commenters supported our August 2, 1996, proposal.

One commenter requested that APHIS explain the sound science upon which it based each provision of the proposed rule. We acknowledge the need to base regulatory actions on the latest scientific data available. The provisions of the Karnal bunt regulations are based on a combination of scientific data and recommendations of the Karnal bunt Science Panel, APHIS' experience as a regulatory agency, and standard regulatory procedures and systems that have proven effective in previous

programs. Sound science, coupled with environmental considerations, forms the basis for a risk-based, flexible regulatory system to accomplish APHIS' goals to (1) protect other wheat-producing areas of the United States, (2) protect and maintain export markets, and (3) provide as many options as possible for wheat producers within the impacted area.

One commenter disagreed with the statement in our proposed rule that the purpose of the proposal was to relieve unnecessary restriction on areas regulated because of Karnal bunt, while guarding against the artificial spread of the disease. The commenter stated that the proposal actually expands the restriction on movement. For example, stated the commenter, where the regulations required the removal of soil from equipment that entered a field that is positive for Karnal bunt or that had been planted with contaminated seed, the proposed rule expands the cleaning requirement to any field known to be planted in the past 5 years with seed contaminated with Karnal bunt, and fields adjacent to fields in which preharvest samples tested positive. We agree with the commenter that, in many cases, such cleaning is unnecessary within the regulated area. In this final rule, we have modified the cleaning and sanitization requirements to require these measures only when equipment or conveyances are moved out of the regulated area, or are moved from fields that tested positive for Karnal bunt during the 1996–97 crop season.

Several commenters stated that APHIS should publish in the regulations the terms of compliance agreements under which regulated articles may be moved out of regulated areas. In general, the terms of compliance agreements follow the provisions and treatments set forth in the regulations. Additional information is often provided to the regulated establishment concerning recordkeeping, handling of limited permits and certificates, local contacts, and any special instructions specific to the operations of the establishment. When the interim rule establishing the Karnal bunt regulations was promulgated, its provisions were general and flexible. This was because we were regulating a new outbreak of a disease with which we had minimal past experience. In this final rule, we are publishing a table of conditions under which areas of differing risk levels will be regulated, to inform growers and other members of the industry of how they will be impacted. Compliance agreements will be based on these regulatory conditions.

One commenter stated that, where possible, the use of compliance agreements for such actions as the movement of grain, disposition of millfeed, and movement of equipment should be avoided. The commenter said that being required to sign a compliance agreement in order to handle a product discourages potential buyers from handling the product in question. We consider the use of compliance agreements to be beneficial to both APHIS and the person operating under the compliance agreement. The use of compliance agreements allows APHIS to better use its resources, and allows the person to handle and move regulated articles without the constant presence of an inspector. We believe that the necessity for on-site monitoring during operations and at movement would be more discouraging to buyers and handlers.

Risk Categories for Areas and Fields

In § 301.89–3(f) of our proposed rule, we proposed criteria by which fields in regulated areas would be classified into various risk class levels. We proposed that the Administrator would classify fields in regulated areas according to the following categories, and would notify the owner or person in possession of the field of the field's classification:

1. Fields in which preharvest samples tested positive for Karnal bunt;
2. Fields known to be planted in the past 5 years with seed contaminated with Karnal bunt;
3. Fields adjacent to fields in which preharvest samples tested positive;
4. Fields associated only through ownership, management, the movement of equipment, or proximity within a distinct definable area with fields in which preharvest samples tested positive; and
5. Fields within a regulated area that are not fields described in ''2'' and ''4,'' and that are part of a distinct definable area that includes no fields in which preharvest samples tested positive.

A number of commenters commented on these proposed categories. Some of the commenters addressed the proposed categories in general; other commenters addressed individual categories. After reviewing the recommendations made by the commenters, we believe that we should revise our categorization of risk areas to simplify them and to make it easier for the owner of specific fields to know the status of those fields. For purposes of clarity, in the following paragraphs we will first explain what this revised system of categorization will consist of, then we will discuss comments on the system of categorization that we set forth in our proposed rule. We believe conducting the discussion of the comments in this way will allow us to respond to the comments in the context of the regulatory scheme that we are adopting in this final rule.

Regulated Areas

In § 301.89–3 of this final rule, we set forth the criteria for designating an area as a regulated area. These criteria are the same as that set forth in the proposal. Under these criteria, the Administrator will regulate each State or portion of a State that is infected. In § 301.89–1 of both the proposal and this final rule, *infestation (infected)* is defined as the ''presence of Karnal bunt, or any stage of development of the fungus *Tilletia indica* (Mitra) Mundkur, or the existence of circumstances that make it reasonable to believe that Karnal bunt is present.'' In § 301.89–2 of this final rule, we set forth a list of regulated areas.

Restricted Areas and Surveillance Areas

In this final rule, we then divide each regulated area into two sub-categories. In each regulated area, all or a portion of that regulated area will be designated as either a ''restricted area'' or a ''surveillance area.'' In § 301.89–1 of this final rule, we define a *restricted area* as a ''distinct definable commercial wheat production area that includes at least one field that tested positive for Karnal bunt.'' A *distinct definable area* is defined as ''a commercial wheat production area of contiguous fields that is separated from other wheat production areas by desert, mountains, or other nonagricultural terrain as determined by an inspector, or, in the case of restricted areas, as determined by an inspector based on survey results, including the number of positive fields and the relative spore count of the fields within the area.'' In § 301.89–1, we define *surveillance area* as a ''distinct definable commercial wheat production area in which no fields have tested positive for Karnal bunt, but in which movement of contaminated seed has occurred.'' In § 301.89–2 of this final rule, we set forth a list of each restricted area and each surveillance area.

There are several practical differences between being designated a restricted area and being designated a surveillance area. First, grain from a restricted area that tests negative for Karnal bunt may move under limited permit from the regulated area to designated facilities under safeguard and sanitation conditions; grain from a surveillance area that tests negative for Karnal bunt may move under certificate to any destination without restriction.

Additionally, under § 301.89–13(c) of this final rule, millfeed from grain produced in a restricted area is required to be treated, whereas millfeed from grain produced in a surveillance area is not required to be treated. However, as explained below, only certain types of fields will be permitted to be planted with host crops; therefore only those fields will be capable of producing grain to be sent for milling.

In this final rule, each restricted area and each surveillance area is further divided into individual fields within those areas, as described in the following paragraph. Each field in a restricted area will fall into one of three categories. Each field in a surveillance area will fall into one of two categories.

In a restricted area, each field will be designated either as (1) a field in which preharvest samples tested positive; (2) a field planted with known contaminated seed in 1995; or (3) any other field within the restricted area. In a surveillance area, each field will be designated either as (1) a field planted with known contaminated seed in 1995; or (2) any other field in the surveillance area.

There is a practical effect to being designated a certain risk level of field. In a restricted area, in fields in which preharvest samples tested positive, no Karnal bunt host crops may be planted in the 1996–97 crop season. This same prohibition applies to fields in both restricted areas and surveillance areas which were planted with known contaminated seed in 1995. Also, as noted above, millfeed from grain from a field in the ''any other field'' category in a restricted area must be treated; millfeed from a surveillance area need not be treated.

In order to help clarify our system of categorization, we have set forth each category we are establishing in this final rule, and the practical ramifications of being classified in that category, in a table in this final rule, as follows:

CONDITIONS FOR WHEAT PRODUCTION AND UTILIZATION IN A REGULATED AREA

	Definition	Host planting	Seed	Decontamination	Millfeed	Survey	Disposition of grain
Restricted area Category:							
1	Fields in which preharvest samples tested positive.	No host planting in 1996–97 crop season.	Not applicable.	Equipment movement outside regulated area: cleaned and sanitized. Movement within: no restrictions.	Not applicable	Not applicable.	Not applicable.
2	Fields planted with known contaminated seed in 1995.	No host planting in 1996–97 crop season.	Not applicable.	Equipment movement outside regulated area: cleaned and sanitized. Movement within: no restrictions.	Not applicable	Not applicable.	Not applicable.
3	All other fields within restricted area.	No restrictions.	Tested and, if from regulated area, treated prior to planting.	Equipment movement outside regulated area: cleaned and sanitized. Movement within: no restrictions.	Required, unless destination State controls disposition/movement.	Double-tested: Sampled in field at harvest; composite sample prior to movement.	Movement of grain testing positive restricted; grain testing negative may move under limited permit to designated facilities under safeguard and sanitation conditions.
Surveillance area							
4	Fields planted with known contaminated seed in 1995.	No host planting in 1996–97 crop season.	Not applicable.	Equipment movement outside regulated area: cleaned and sanitized. Movement within: no restrictions.	Not applicable	Not applicable.	Not applicable.
5	All other fields located in definable area where no fields in risk level 1 are located.	No restrictions.	Tested and, if from regulated area, treated prior to planting.	Equipment movement outside regulated area: cleaned and sanitized. Movement within: no restrictions.	Not required ...	Double-tested: Sampled in field at harvest; composite sample prior to movement.	Movement of grain testing positive restricted; grain testing negative may move under certificate. Safeguard and sanitation of railcars not required.

Comments On Proposed Risk Categories

We will now discuss the comments that addressed the risk categories we set forth in our proposal. We will first discuss those comments that addressed our proposed system of categorization in general. We will then discuss those comments that addressed specific categories set forth in our proposal.

Comments on Proposed Categorization in General

The definitions in proposed § 301.89–1 include a definition of *distinct definable area.* This definition reads ''a commercial wheat production area of contiguous fields that is separated from other wheat production areas by desert, mountains, or other nonagricultural terrain as determined by an inspector.'' One commenter stated that this definition does not accurately describe wheat production in the proposed regulated area of New Mexico, where less than 4 percent of the agricultural acreage is planted in wheat, and the fields are small and randomly dispersed. We believe we can identify distinct definable areas in New Mexico when appropriate. Under the criteria for classification set forth in this final rule, all regulated portions of New Mexico will at this time be classified as surveillance areas.

One commenter stated that although the proposed rule stated that regulated areas would be classified according to specific risk categories, such classifications were not included in the proposed regulations. Another commenter requested that APHIS publish a map showing the location of fields in Arizona and the level of risk classification for those fields. Another commenter stated that the regulations should explain how risk levels are determined. As noted above, in this final rule, we have simplified the proposed rule by categorizing areas into two types—restricted and surveillance, and we describe the criteria for and the boundaries of each type of area. We have identified the location of fields that have tested positive and will notify growers in those areas. We are preparing maps and will distribute them when they are completed.

One commenter stated that the criteria for the different risk levels is broad and arbitrary, and that, consequently, lenders will not be able to assess the risk a field presents. One commenter stated that the proposed rule did not make clear what practical impact classification of fields into different risk categories would have. As noted, in this final rule, we have simplified the provisions that were proposed by setting forth criteria for two categories of fields—restricted and surveillance. We are also providing a table in the regulations that outlines the effects of being classified as a particular area.

One commenter inquired whether a process would be established by which a field classification could be appealed. The commenter also inquired whether the risk classification of a field would be subject to change after initial classification. No appeal process has been established. After initial classification, changes would occur only when positive survey results indicate that it is appropriate.

Several commenters expressed concern that the ''regulated'' areas in the proposed rule were identical to the ''quarantined'' areas in the current regulations, and recommended that the regulated areas be reduced. In this final rule, we are making certain changes to the existing quarantined areas. Additionally, there are significant differences between restricted areas as defined in this final rule, and surveillance areas.

One commenter questioned whether the Department has the resources to regulate the different field classifications, rather than simply on an ''area'' level. We are confident we have sufficient resources to enforce the regulations. Operationally, we consider the regulatory scheme in this final rule to be simpler than that in our proposed rule.

One commenter inquired whether currently quarantined areas that do not fit into one of the classifications described above would be considered not to be quarantined. As noted above, in this final rule, we are removing from regulation additional wheat growing areas that have no association with contaminated seed, We believe the remaining areas can be categorized.

Several commenters recommended that only four categories of fields be established, as follows:

1. Fields in which 1996 preharvest samples tested positive;

2. Fields known positively to have been planted with contaminated seed since 1995;

3. Fields in which 1996 preharvest samples tested negative; and

4. Fields outside the 1996 regulated area. We are not adopting the commenter's recommended scheme, which we consider to require regulations essentially the same as those in effect during the 1996 harvest. We believe that, based on survey data, we can relax restrictions in the coming crop year in some areas, while we gather more data on the extent of the infestation.

As part of this scheme of four categories, the commenters recommended the following:

Host Planting: Prohibited for 1 year in categories ''1'' and ''2;'' unrestricted in categories ''3'' and ''4.''

Seed: No seed should be present in categories ''1'' and ''2;'' test and treat in category ''3;'' recommend treatment in category ''4.''

Disposition of Grain: No grain should be present in categories ''1'' and ''2;'' unrestricted disposition from categories ''3'' and ''4.''

Decontamination: Decontaminate equipment with soil in categories ''1'' and ''2;'' decontaminate only equipment that came into contact with contaminated wheat in categories ''3'' and ''4''

Millfeed Treatment: No requirements.

With regard to the restrictions and requirements recommended by the commenters, we believe that due to the potential natural and artificial movement of the Karnal bunt pathogen, areas that include fields that test positive are a high risk, and that different levels of regulatory activity within areas, not only fields, is appropriate.

One commenter recommended that the current quarantine be replaced with a program of ''monitored grain exchange,'' to contain three key elements:

1. Require that all seed, feed, and grain be twice tested negative before leaving areas where there is a risk of contamination, and require source labeling for all grain shipped from these areas.

2. Within the current quarantined area, classify zones according to three levels of risk, as follows:

a. *Zone 1:* Bunted kernels have been confirmed. No grain may leave area, except for use as feed. All grain exceeding a specified tolerance is removed from distribution.

b. *Zone 2:* No contamination has been found, but a risk of contamination exists. Allow grain to move to designated end-use sites, such as research facilities, certain seed replication sites, and flour mills.

c. *Zone 3:* No contamination has been found. Allow unlimited grain movement once samples have been twice tested negative.

3. Establish a multi-level tolerance based on end use. As noted above, we have modified the regulatory scheme we proposed. We have included several elements similar to those suggested by the commenter, including the testing twice of all grain, restricted movement of grain from areas that tested positive or presented a risk

of contamination, and unrestricted movement from areas of minimal risk.

The provisions in § 301.89–4 of the current regulations set forth conditions for the movement of regulated articles from quarantined areas. These provisions are similar to those set forth in § 301.89–5 of the proposed rule, ''Movement of regulated articles from or within regulated areas.''

Comments on Specific Categories

We now discuss comments that addressed specific categories of fields as set forth in our proposal.

1. Fields in Which Preharvest Samples Tested Positive for Karnal Bunt

One commenter specifically supported this risk classification. Another commenter recommended that future plantings in this category be limited for 5 years to crops that are not hosts of Karnal bunt. Another commenter recommended that the regulations require that wheat be planted no more often than every third year in a field testing positive for Karnal bunt. During the 1996–97 crop season, we are prohibiting the planting of host crops in fields that tested positive in the 1996 harvest testing. We will reassess this prohibition on an annual basis after considering new survey and scientific information.

Several commenters stated that the proposed requirements for the treatment of millfeed from wheat from fields of this category are unnecessary, because fields that tested positive in 1996 would have no wheat grown on them in 1997. To eliminate any confusion, we have reworded the regulations to clarify that this applies only to fields that test positive in the future. However, we expect to find additional fields that test positive. Millfeed produced from grain originating from such positive fields will require appropriate treatment and handling.

One commenter stated that if a new field tested positive for Karnal bunt in 1997, the grain would be heat treated, sent to a feedlot within the quarantined area, or handled in some other fashion that would not spread the disease, and there would be no millfeed. We are cooperating with the industry and States to develop additional options for positive grain, such as milling or export.

One commenter inquired how APHIS would classify a field that tested positive during preharvest testing, then was harvested and tested negative at harvest. In such a situation, the field would be classified as positive for Karnal bunt.

Several commenters objected to the proposed requirement that vegetable crops that are not moved to an approved processing facility must be cleaned of all soil and plant debris prior to movement from fields in this category, and also from fields in categories ''2'' and ''3,'' as described below. The commenters stated that fresh fruits and vegetables are in a ''consumer market'' upon harvest and packaging, and therefore present no risk of spreading Karnal bunt. Most fruit and vegetables are cleaned prior to being sold. We are concerned with the handling of the soil resulting from this cleaning when the fruits and vegetables are moved outside the regulated area.

2. Fields Known to be Planted in the Past 5 Years With Seed Contaminated With Karnal Bunt

One commenter stated that the 5-year period may be too long, based on a report from India that, according to the commenter, indicated that Karnal bunt spores can survive in the soil for only 27–45 months. One commenter objected to having to disinfect equipment because seed known to be contaminated was planted in 1994, if all lots of seed in 1995 tested negative. Several commenters recommended that this category include only fields known to be planted with contaminated seed within the last year. We agree that the issue of spore viability requires further review, and are conducting such review. Due to the need for such review, and the absence of historical records regarding many fields, in this final rule, we have changed the description of fields of this type to include only fields planted with contaminated seed in 1995. In addition, in the final rule, we are not requiring cleaning and sanitization of equipment moving within the regulated area, except from fields testing positive for Karnal bunt during the 1996–97 crop season.

One commenter recommended that future plantings in this category of field be limited for 5 years to crops that are not hosts of Karnal bunt. During the 1996–97 crop season, we are prohibiting the planting of host crops in fields that were planted with contaminated seed in 1995. We will reassess this prohibition on an annual basis after considering new survey and scientific information.

One commenter questioned the need to clean and disinfect equipment moving out of the regulated area from fields of this category, stating that wind erosion can relocate more spores in 12 hours than equipment could carry in years. In order to protect other wheat growing areas of the United States, we consider it necessary to require cleaning and sanitization of equipment and conveyances moving out of a regulated area. However, as discussed earlier in this document, we acknowledge the role of wind in the local movement of the pathogen and have removed the requirement for cleaning and sanitization for movement within the regulated area, except from fields testing positive for Karnal bunt during the 1996–97 crop season.

Several commenters recommended that future planting restrictions for fields of this category be applied only if there is direct evidence that the seed planted was from a contaminated source and the specific location of the site where it was planted can be identified. We agree with the commenters' recommendation and, as noted above, have redefined this category as fields planted in 1995 with known contaminated seed. This categorization will be applied only if there is direct evidence that the seed planted was from a contaminated source and if the specific location of the site where it was planted can be identified.

Several commenters recommended that no planting restrictions be applied to fields in this category, and one commenter described this category as unrealistic. The commenter stated that unless the seeds are checked by DNA analysis and tested for germination, there is no certainty that the spores are Karnal bunt. The commenter also stated that the presence of a relatively small number of spores in soil may not mean there is significant risk when moving wheat from the area. We are making no changes based on these comments. The lots in question that were planted in 1995 were determined to be contaminated by the presence of bunted kernels, by standard microscopic diagnostic techniques involving morphometric characteristics, and/or by DNA analysis. We consider it necessary to prohibit planting of host crops in fields where contaminated seed was planted. Planting of host crops would allow multiplication and probable spread of the disease.

Several commenters stated that the requirement to clean soil and plant debris from vegetables from this category of fields is excessive and should be removed. We are making no changes based on these comments. We consider it necessary to require that vegetable crops moving outside the regulated area be cleaned of all soil and plant debris prior to movement, or be moved under limited permit to processing facilities for cleaning.

One commenter stated that if there is a prohibition against planting in a field in which a preharvest sample has tested positive or a field that has been planted within the last 5 years with

contaminated seed, it should also apply to such fields outside the regulated area. If it does not, said the commenter, the scientific basis for such a decision should be published. We consider our response to the comment discussed earlier regarding varying restrictions on different areas to be applicable here. As noted, APHIS has traced contaminated seed to several locations outside the regulated areas. In some cases, the seed had not been planted but was still in storage. In those cases, the seed was destroyed and the facilities were cleaned and sanitized. Contaminated seed was traced to several small research plots, where the fields were plowed down and fumigated. In some instances, despite extensive testing and traceback efforts, we have not been able to confirm that contaminated seed was either distributed or planted in the area in question. We are continuing additional monitoring activities in those areas. We consider such measures sufficient to ensure that Karnal bunt is eliminated from the site without the unnecessary imposition of a geographic quarantine.

3. Fields Adjacent to Fields in Which Preharvest Samples Tested Positive

Several commenters recommended that this category be deleted, stating that no scientific justification exists for presuming that Karnal bunt can be easily spread from field to field due only to physical proximity. Alternatively, the commenters recommended that ''adjacent'' be defined, and not mean fields separated by main roads, main canals, agricultural drains, and other large landmarks. Several commenters opposed restrictions on movement from this category of fields, as well as requirements for cleaning and disinfection and the treatment of millfeed. The proposed category of fields referred to by the commenters is not set forth in this final rule. All fields in an area that includes a field that tests positive are now classified as being part of a restricted area. There is a higher risk in these areas that the pathogen is present due to windborne spread and movement of equipment and means of conveyance prior to regulation.

4. Fields Associated Only Through Ownership, Management, the Movement of Equipment, or Proximity Within a Distinct Definable Area With Fields in Which Preharvest Samples Tested Positive

Several commenters recommended that this category be deleted, because, according to the commenters, there is no evidence that Karnal bunt has been spread among fields associated as described. The commenters opposed the proposed requirement for the treating of millfeed from fields of this category. One commenter stated that APHIS should either state the scientific basis for regulating these fields, or consider these fields outside the regulated area. Although this category of fields is not specifically set forth in this final rule, we consider our response to the previous comment applicable here.

One commenter recommended that this category should also include fields that are possibly associated with contaminated seed, but for which direct evidence is not available. The commenter cited the situation where a specific field in which contaminated wheat was planted cannot be identified because the grower did not keep records. In such a case, said the commenter, all fields planted to the same variety as the contaminated seed are suspect. The commenter stated that, because of the elevated risk of fields in this category, farm equipment, farm tools, and soil moving equipment should be required to be cleaned and disinfected prior to movement from fields in this category to locations outside the regulated area. In this final rule, we have modified our decontamination requirements to require cleaning and sanitization of farm equipment, tools, and soil-moving equipment prior to movement out of the regulated area, and prior to movement from fields testing positive for Karnal bunt during the 1996–97 growing seasons.

One commenter stated that the cleaning and disinfection requirements for fields in categories ''1,'' ''2,'' and ''3'' should also apply to regulated articles from fields in categories ''4'' and ''5.'' The commenter stated that 1996 pre-harvest testing did not detect the presence of Karnal bunt in all infected or contaminated fields, that there were reported cases where positive post-harvest testing followed negative pre-harvest testing, and that, because all fields with a history of wheat production in years prior to the 1995–96 crop were not planted to wheat in 1995–96, there are no pre-harvest test results from these fields to provide evidence of area freedom from Karnal bunt. We agree with the commenter. This final rule requires that equipment and means of conveyance moved out of any regulated area be cleaned and sanitized. As noted above, however, we are not requiring cleaning for movement within the regulated area, except from fields testing positive for Karnal bunt during the 1996–97 crop season.

5. Fields Within a Regulated Area That are Not Fields Described in ''2'' and ''4,'' and That are Part of a Distinct Definable Area That Includes No Fields in Which Preharvest Samples Tested Positive

One commenter supported the proposed provision that millfeed from wheat from fields of this category need not be treated to be moved from a regulated area. Several commenters recommended that fields meeting this classification be removed from the regulated area. We are making no changes based on these comments. We consider it necessary to regulate these fields and areas because of the movement of contaminated equipment and seed, composite samples that tested positive in the areas, and the fact that many fields that were planted to wheat in years prior have not been sampled.

Seed For Planting

One commenter stated that the requirements regarding planting seed in § 301.89–4 as proposed should make clear that seed to be planted must first be sampled and tested negative for Karnal bunt, then be treated with a fungicide. The regulations as proposed set forth the fungicide requirement first, then the sampling and testing requirement. We agree that the recommended change would clarify our intent and have made the change in this final rule.

One commenter stated that it would be helpful to the wheat industry if APHIS specified which fungicides are acceptable. We agree with the commenter, and have added to § 301.89–13 of this final rule the provision that the treatment for seed must consist of either: (1) 6.8 fl. oz. of Carboxin thiram (10 percent + 10 percent, 0.91 + 0.91 lb. ai./gal.) flowable liquid and 3 fluid ounces of pentachloronitrobenzene (2.23 lb. ai./gal.) per 100 pounds of seed; or (2) 4.0 fluid ounces of carboxin-thiram (1.67 + 1.67 lb. ai./gal.) flowable liquid and 3 fluid ounces of pentachloronitrobenzene (2.23 lb. ai./gal.) per 100 pounds of seed.

One commenter asked APHIS to specify whom the Agency would allow to conduct the required sampling and testing. APHIS and State representatives conduct the sampling and testing.

One commenter stated that the requirement in § 301.89–4 for sampling and negative testing of seed to be planted should apply only to wheat seed originating within a regulated area. We disagree. We consider it necessary to ensure that all seed planted in the regulated area is free of Karnal bunt, and to be able to identify any sources of

contamination outside the regulated area.

One commenter recommended that no seed be planted within a quarantined area unless it has been certified as having undergone the necessary phytosanitary requirements, and has been treated with antifungicides. We are making no changes based on this comment. In this final rule, we require that all seed to be planted within a regulated area be tested for the causal agent of Karnal bunt and be treated with a fungicide.

Millfeed

Section 301.89–13 of the proposed rule set forth requirements for approved treatments for regulated articles, including millfeed. Several commenters stated that requirements for treatment of millfeed should apply only to millfeed from wheat grown in fields that have tested positive for Karnal bunt. APHIS is requiring millfeed to be treated if from grain originating in restricted areas. There is a risk of movement of the pathogen with wind or equipment and means of conveyance from fields that test positive. Many fields that will be planted in wheat in the 1996–97 crop season have not been tested.

One commenter requested that the requirement that millfeed from quarantined areas be treated be reviewed, especially if it can be shown that its final destination and disposition does not present a significant risk for re-infection or disease spread to new areas. One commenter stated that APHIS should continue its policy of allowing States to govern millfeed movement, and should continue its policy of not inspecting or quarantining flour mills. We agree that final destination and disposition of millfeed is important in determining risk. During the 1996 harvest, we allowed the destination State to determine appropriate treatment and handling based on the intended use within their State. Interstate movement was still monitored and treated when appropriate. This final rule requires special treatment and handling of millfeed only when the grain originates from distinct definable areas that have fields that test positive. We are not conducting detection surveys in flour mills.

Several commenters recommended that millfeed that results from the milling of wheat from clean areas within the quarantined area and/or wheat that has been tested and found free of teliospores should be allowed to move freely in commerce, and that treatment of the millfeed should be required only when teliospores have been detected. One commenter stated that it appeared that millfeed from grain from all areas of Arizona would have to be treated. In this final rule, we are not requiring millfeed to be treated if from grain originating in surveillance areas. The regulated areas in Arizona include several surveillance areas. As discussed above, we consider grain from restricted areas to pose a higher risk. APHIS will continue to allow destination States willing to accept responsibility to determine the appropriate treatment and handling based on the intended use within their States.

One commenter objected to the requirement that millfeed be heat treated at 170 °F for at least 1 minute, and recommended instead that the treatment require only instantaneous heating to 170 °F. The commenter stated that the 1-minute requirement would require substantial capital investment and would have a negative effect on mills, which the commenter stated rely on high throughput rates. We are making no changes based on this comment. The ''1-minute'' requirement ensures that all surface areas are exposed to a temperature that will devitalize any spores present.

One commenter stated that the requirement for heat treatment of millfeed should be maintained unless other effective mitigating measures can be identified. We agree and are retaining the heat treatment requirement in this final rule. However, as noted, under this final rule we are reducing the amount of millfeed that would have to be treated.

Several commenters recommended that APHIS review the millfeed treatment requirements, and consider all options that reduce the risk of further contamination, but that may be more easily incorporated in existing milling processes. APHIS has reduced the millfeed treatment requirement and has provided alternatives for disposition in States willing to accept the responsibility for monitoring. We are continually looking for other options that are effective and less intrusive, and are willing to explore any ideas that may be more easily incorporated into existing milling processes.

Additional Comments

One commenter requested that no areas in New Mexico be classified as regulated areas. The commenter recommended that no quarantines be placed on a field in that State unless preharvest sampling shows the existence of Karnal bunt. We disagree with the commenter's recommendation. We consider it necessary to continue to regulate these fields and areas because of the potential movement of contaminated equipment and seed prior to regulation, and the fact that many fields that were planted to wheat in years prior have not yet been sampled. However, under this final rule, all regulated areas in New Mexico will at this time be classified as surveillance areas, rather than as restricted areas.

Section 301.89–12(b) of our proposed rule provided that vegetable crops be cleaned of all soil and plant debris prior to movement outside the regulated area, or be moved under limited permit to processing facilities approved by the Administrator. One commenter expressed concern that this requirement might be applied to fields that have not been contaminated with Karnal bunt. We believe that requiring that vegetable crops moving outside the regulated area meet the conditions for freedom from soil described above is necessary to protect other wheat production areas.

Section 301.89–12(a) of the proposed rule sets forth cleaning and disinfection requirements for used mechanized cultivating equipment, used mechanized harvesting equipment, used farm tools, and used mechanized soil-moving equipment. One commenter recommended that the cleaning and disinfection requirements also apply to used seed conditioning equipment. We agree and are making the appropriate addition in this final rule.

A number of commenters submitted comments that expressed general concerns about the economic impact of the Karnal bunt program, without addressing specific issues. Others expressed general criticisms of the way the Karnal bunt regulations were being carried out, expressed concern regarding the effect of the Karnal bunt regulations on international trade, or expressed an opinion regarding APHIS' role in research regarding the disease. Although we are not specifically addressing these comments in this final rule, we have reviewed each one of them carefully, and share their concerns that the Karnal bunt program must remain a risk-based program to prevent the artificial spread of Karnal bunt.

Changes to Areas Regulated Because of Karnal Bunt

A number of commenters recommended that the areas quarantined because of Karnal bunt be reduced as evidence indicates which areas do not pose a risk of having the disease. We agree with the commenters. When the initial quarantined areas were established, they were deliberately broadly drawn due to the lack of data available at that time as to the extent of the infestation. Based on sampling and testing during the past months, we have been able to shrink the areas designated

as quarantined areas. In this final rule, we are further reducing areas regulated because of Karnal bunt.

We are amending § 301.89–3(e) of the regulations by removing the following portions of the States of Arizona, New Mexico and Texas from the list of quarantined areas: The entire county of Mohave, AZ, portions of Dona Ana and Sierra Counties, NM, and portions of El Paso and Hudspeth Counties, TX. These areas do not produce wheat, durum wheat, or triticale, or do produce wheat but we have been able to determine that they have no association with Karnal bunt contaminated seed, and, therefore, do not present a risk of being, or becoming, infested with Karnal bunt. In addition, we are making editorial changes to the description of the quarantined area in Luna County, NM, for clarity and consistency. The remainder of the counties listed in § 301.89–3(e) will remain under regulation because of potential infestation with Karnal bunt.

The area of Dona Ana County, NM, that will remain under regulation is that portion of the county bounded as follows: Beginning at the intersection of the Sierra/Dona Ana County line and Interstate 25; then south along Interstate 25 to the Texas State line; then west and south along the New Mexico/Texas State line to the United States/Mexico boundary; then west along the United States/Mexico boundary to the Luna/Dona Ana County line; then north and east along the Dona Ana County line to the point of beginning.

The areas of Sierra County, NM, that will remain under regulation are those portions of the county bounded as follows: (1) Beginning at intersection of the Luna/Sierra County line and State Route 27; then north along State Route 27 to State Route 152; then east along State Route 152 to Interstate 25; then south along Interstate 25 to the Dona Ana County line; then west and south to the Luna County line; then west along the Luna/Sierra County line to the point of beginning; and (2) Beginning at the intersection of the Socorro/Sierra County line and State Route 142; then southeast along State Route 142 to State Route 52; then south along State Route 52 to Interstate 25; then north along Interstate 25 to the Socorro/Sierra County line; then west along the Socorro/Sierra County line to the point of beginning.

The area of El Paso County, TX, that will remain under regulation is that portion of the county bounded as follows: Beginning at a point on the Rio Grande River due east from the intersection of County Route 659 and County Route 375; then due east along an imaginary line to County Route 659; then north along County Route 659 to Interstate 10; then southeast along Interstate 10 to the El Paso/Hudspeth County line; then southwest along the El Paso/Hudspeth County line to the Rio Grande River; then north along the Rio Grande River to the point of beginning.

The area of Hudspeth County, TX, that will remain under regulation is that portion of the county bounded as follows: Beginning at the intersection of the El Paso/Hudspeth County line and Interstate 10; then southeast along Interstate 10 to County Route 34; then south along County Route 34 to County Route 192; then due south along an imaginary line to the Rio Grande River; then northwest along the Rio Grande River to the El Paso/Hudspeth County line; then north along the El Paso/Hudspeth County line to the point of beginning.

This action relieves unnecessary regulatory restrictions on the public while continuing to prevent the artificial spread of Karnal bunt into noninfested areas of the United States. Additionally, in this final rule as discussed above in this **SUPPLEMENTARY INFORMATION**, the areas designated as regulated areas in § 301.89–3 of this final rule are divided into ''restricted areas'' and ''surveillance areas,'' as set forth in § 301.89–3.

Executive Order 12866 and Regulatory Flexibility Act

This rule has been reviewed under Executive Order 12866. This rule has been determined to be economically significant for purposes of Executive Order 12866 and, therefore, has been reviewed by the Office of Management and Budget.

This action makes final with certain changes a series of interim rules establishing and amending regulations regarding a program to control and eradicate Karnal bunt in the United States, and a proposed rule establishing criteria for levels of risk for areas with regard to Karnal bunt, and criteria for seed planting and movement of regulated articles based on those risk levels. It does not make final an interim rule establishing compensation for certain growers and handlers, owners of grain storage facilities, and flour millers in order to mitigate losses and expenses incurred because of Karnal bunt. We are still considering issues related to compensation. This rule is being published on an emergency basis in order to give affected growers the opportunity to make planting decisions for the 1996–97 crop season on a timely basis. This emergency situation makes timely compliance with section 6, subsections (3)(B)(ii) and (3)(C), of Executive Order 12866 impracticable. We will complete the required cost-benefit analysis as soon as possible and make this information available to the public. Further, this emergency situation makes compliance with section 603 and timely compliance with section 604 of the Regulatory Flexibility Act (5 U.S.C. 603 and 604) impracticable. This rule may have a significant economic impact on a substantial number of small entities. If we determine this is so, then we will discuss the issues raised by section 604 of the Regulatory Flexibility Act in our Final Regulatory Flexibility Analysis, which we will publish in a future Federal Register.

Small Business Regulatory Enforcement Fairness Act of 1996 (Pub. L. 104–121, 5 U.S.C. §§ 801–808)

This rule has been designated by the Administrator, Office of Information and Regulatory Affairs, Office of Management and Budget, as a major rule under the Small Business Regulatory Enforcement Fairness Act of 1996 (Act). The Administrator of the Animal and Plant Health Inspection Service has determined, however, that there is good cause for making this rule effective less than 60 days after submission of the rule to each House of Congress and to the Comptroller General because a delay in the implementation of this rule would be contrary to the public interest. It is necessary to make this rule effective 30 days after publication in the Federal Register in order that affected growers and other regulated parties can make critical planning decisions for the 1996–1997 crop year. Obviously, it is also essential to remove, as soon as possible, many other restrictions affecting growers and other regulated parties that are deemed unnecessary in this final rule. Section 808 of the Act provides that rules which would be exempted from the notice and comment provisions of the Administrative Procedure Act may be excepted from section 801(a)(1)(A), and the delay in the effective date for major rules under section 801(a)(3). Such rules may be made effective as the agency promulgating the rule determines.

A 60-day or longer delay of the effective date for this final rule would clearly be contrary to the public interest, since it would result in unnecessary burdens on affected growers and other regulated parties who would otherwise be released from regulation or be subjected to lesser regulatory requirements than under the current rules. This is a critical time for growers in the regulated areas. These growers

must make their planting decisions promptly for the 1996–1997 crop season.

Executive Order 12372

This program/activity is listed in the Catalog of Federal Domestic Assistance under No. 10.025 and is subject to Executive Order 12372, which requires intergovernmental consultation with State and local officials. (See 7 CFR part 3015, subpart V.)

Executive Order 12988

This rule has been reviewed under Executive Order 12988, Civil Justice Reform. This rule: (1) Preempts all State and local laws and regulations that are inconsistent with this rule will be preempted; (2) has no retroactive effect; and (3) does not require administrative proceedings before parties may file suit in court challenging this rule.

National Environmental Policy Act

An environmental assessment and finding of no significant impact have been prepared for this rule. The assessment provides a basis for the conclusion that the anti-fungicide and other sanitization treatments required under the Karnal bunt regulations do not present a risk of introducing or disseminating plant pests and will not have a significant impact on the quality of the human environment. Based on the finding of no significant impact, the Administrator of the Animal and Plant Health Inspection Service has determined that an environmental impact statement need not be prepared.

The environmental assessment and finding of no significant impact were prepared in accordance with: (1) The National Environmental Policy Act of 1969 (NEPA) (42 U.S.C. 4321 *et seq.*), (2) Regulations of the Council on Environmental Quality for implementing the procedural provisions of NEPA (40 CFR parts 1500–1508), (3) USDA regulations implementing NEPA (7 CFR part 1b), and (4) APHIS' NEPA Implementing Procedures (7 CFR part 372).

Copies of the environmental assessment and finding of no significant impact are available for public inspection at USDA, room 1141, South Building, 14th Street and Independence Avenue SW., Washington, DC, between 8 a.m. and 4:30 p.m., Monday through Friday, except holidays. Persons wishing to inspect copies are requested to call ahead on (202) 690–2817 to facilitate entry into the reading room. In addition, copies may be obtained by writing to the individual listed under **FOR FURTHER INFORMATION CONTACT.**

Paperwork Reduction Act

This rule contains no new information collection or recordkeeping requirements under the Paperwork Reduction Act of 1995 (44 U.S.C. 3501 *et seq.*).

Unfunded Mandates Reform Act of 1995

Title II of the Unfunded Mandates Reform Act of 1995 (UMRA), Pub. L. 104–4, establishes requirements for Federal agencies to assess the effects of their regulatory actions on State, local, and tribal governments and the private sector. Under section 202 of the UMRA, APHIS generally must prepare a written statement, including a cost-benefit analysis, for proposed and final rules with ''Federal mandates'' that may result in expenditures to State, local, or tribal governments, in the aggregate, or to the private sector, of $100 million or more in any one year. When such a statement is needed for a rule, section 205 of the UMRA generally requires APHIS to identify and consider a reasonable number of regulatory alternatives and adopt the least costly, more cost-effective or least burdensome alternative that achieves the objectives of the rule.

This rule contains no Federal mandates (under the regulatory provisions of Title II of the UMRA) that may result in expenditures to State, local, and tribal government, in the aggregate, or to the private sector, of $100 million or more in any one year. Thus, this rule is not subject to the requirements of sections 202 and 205 of the UMRA.

List of subjects in 7 CFR Part 301

Agricultural commodities, Plant diseases and pests, Quarantine, Reporting and recordkeeping requirements, Transportation.

PART 301—DOMESTIC QUARANTINE NOTICES

Accordingly, 7 CFR part 301 is amended as follows:

1. The authority citation for part 301 continues to read as follows:

Authority: 7 U.S.C. 150bb, 150dd, 150ee, 150ff, 161, 162, and 164–167; 7 CFR 2.22, 2.80, and 371.2(c).

2. In part 301, ''Subpart—Karnal Bunt,'' §§ 301.89–1 through 301.89–12, is amended by revising the table of contents and §§ 301.89–1 through 301.89–11, by redesignating § 301.89–12 as § 301.89–14, by and by adding new §§ 301.89–13 and adding an Appendix to read as follows:

Subpart—Karnal Bunt

Sec.
301.89–1 Definitions.
301.89–2 Regulated articles.
301.89–3 Regulated areas.
301.89–4 Planting.
301.89–5 Movement of regulated articles from regulated areas.
301.89–6 Issuance of a certificate or limited permit.
301.89–7 Compliance agreements.
301.89–8 Cancellation of a certificate, limited permit, or compliance agreement.
301.89–9 Assembly and inspection of regulated articles.
301.89–10 Attachment and disposition of certificates and limited permits.
301.89–11 Costs and charges.
301.89–12 Cleaning and disinfection.
301.89–13 Treatments.
301.89–14 Compensation.

Appendix to Subpart—Karnal Bunt

§ 301.89–1 Definitions.

Administrator. The Administrator, Animal and Plant Health Inspection Service, or any person authorized to act for the Administrator.

Animal and Plant Health Inspection Service (APHIS). The Animal and Plant Health Inspection Service of the U.S. Department of Agriculture.

Certificate. A document in which an inspector or a person operating under a compliance agreement affirms that a specified regulated article meets the requirements of this subpart and may be moved to any destination.

Compliance agreement. A written agreement between APHIS and a person engaged in growing, handling, or moving regulated articles, in which the person agrees to comply with the provisions of this subpart and any conditions imposed under this subpart.

Contaminated seed. Seed from sources in which the Karnal bunt pathogen (*Tilletia indica* (Mitra) Mundkur) has been determined to exist.

Conveyances. Containers used to move wheat, durum wheat, or triticale, or their products, including trucks, trailers, railroad cars, bins, and hoppers.

Distinct definable area. A commercial wheat production area of contiguous fields that is separated from other wheat production areas by desert, mountains, or other nonagricultural terrain as determined by an inspector, or, in the case of restricted areas, as determined by an inspector based on survey results, including the number of positive fields and the relative spore count of the fields within the area.

Farm tools. An instrument worked or used by hand, e.g., hoes, rakes, shovels, and axes.

Infestation (infected). The presence of Karnal bunt, or any stage of development of the fungus *Tilletia*

indica (Mitra) Mundkur, or the existence of circumstances that make it reasonable to believe that Karnal bunt is present.

Inspector. An APHIS employee or designated cooperator/collaborator authorized by the Administrator to enforce the provisions of this subpart.

Karnal bunt. A plant disease caused by the fungus *Tilletia indica* (Mitra) Mundkur.

Limited permit. A document in which an inspector affirms that a specified regulated article not eligible for a certificate is eligible for movement only to a specified destination and in accordance with conditions specified on the permit.

Mechanized cultivating equipment and mechanized harvesting equipment. Mechanized equipment used for soil tillage, including tillage attachments for farm tractors—e.g., tractors, disks, plows, harrows, planters, and subsoilers; mechanized equipment used for harvesting purposes—e.g., combines, cotton harvesters, and hay balers.

Milling products and byproducts. Products and byproducts resulting from processing wheat, durum wheat, or triticale, including animal feed, waste and debris.

Movement (moved). The act of shipping, transporting, delivering, or receiving for movement, or otherwise aiding, abetting, inducing or causing to be moved.

Person. Any association, company, corporation, firm, individual, joint stock company, partnership, society, or any other legal entity.

Premises. All structures, conveyances, or materials associated with a grain storage facility at a single location.

Soil. The loose surface material of the earth in which plants grow, in most cases consisting of disintegrated rock with an admixture of organic material.

Soil-moving equipment. Equipment used for moving or transporting soil, including, but not limited to, bulldozers, dump trucks, or road scrapers.

State. The District of Columbia, Puerto Rico, the Northern Mariana Islands, or any State, territory, or possession of the United States.

§ 301.89–2 Regulated articles.

The following are regulated articles:

(a) Conveyances, including trucks, railroad cars, and other containers used to move wheat, durum wheat, or triticale;

(b) Grain elevators/equipment/structures used for storing and handling wheat, durum wheat, and triticale;

(c) Milling products or byproducts, except flour;

(d) Plants, or plant parts, including grain, seed, or straw of all varieties of the following species:

Wheat: *Triticum aestivum;*
Durum wheat: *Triticum durum;* and
Triticale: *Triticum aestivum* X *Secale cereale;*

(e) *Tilletia indica* (Mitra) Mundkur;

(f) Root crops with soil;

(g) Soil from areas where field crops are produced;

(h) Manure from animals that have fed on untreated or raw wheat, durum wheat, or triticale;

(i) Used bags, sacks and containers;

(j) Used farm tools and equipment;

(k) Used mechanized cultivating equipment;

(l) Used mechanized harvesting equipment;

(m) Used seed conditioning equipment;

(n) Used mechanized soil-moving equipment; and

(o) Any other product, article or means of conveyance when:

(1) An inspector determines that it presents a risk of spreading Karnal bunt due to its proximity to an infestation of Karnal bunt; and

(2) The person in possession of the product, article, or means of conveyance has been notified that it is regulated under this subpart.

§ 301.89–3 Regulated areas.

(a) The Administrator will regulate each State or each portion of a State that is infected.

(b) Less than an entire State will be listed as a regulated area only if the Administrator:

(1)(i) Determines that the State has adopted and is enforcing restrictions on the intrastate movement of the regulated articles listed in § 301.89–2 that are equivalent to the movement restrictions imposed by this subpart; and

(ii) Determines that designating less than the entire State as a regulated area will prevent the spread of Karnal bunt; or

(2) Exercises his or her extraordinary emergency authority under 7 U.S.C. 150dd.

(c) The Administrator may include noninfected acreage within a regulated area due to its proximity to an infestation or inseparability from the infected locality for regulatory purposes, as determined by:

(1) Projections of the spread of Karnal bunt along the periphery of the infestation;

(2) The availability of natural habitats and host materials within the noninfected acreage that are suitable for establishment and survival of Karnal bunt; and

(3) The necessity of including uninfected acreage within the regulated area in order to establish readily identifiable boundaries.

(d) The Administrator or an inspector may temporarily designate any nonregulated area as a regulated area in accordance with the criteria specified in paragraphs (a), (b), and (c) of this section. The Administrator will give written notice of this designation to the owner or person in possession of the nonregulated area, or, in the case of publicly owned land, to the person responsible for the management of the nonregulated area. Thereafter, the movement of any regulated article from an area temporarily designated as a regulated area is subject to this subpart. As soon as practicable, this area either will be added to the list of designated regulated areas in paragraph (e) of this section, or the Administrator will terminate the designation. The owner or person in possession of, or, in the case of publicly owned land, the person responsible for the management of, an area for which the designation is terminated will be given written notice of the termination as soon as practicable.

(e) The Administrator will classify areas within the regulated boundaries as either restricted areas or surveillance areas. Fields within each restricted area and surveillance area will be classified according to the following categories:

(1) *Restricted areas:* A restricted area is a distinct definable commercial wheat production area that includes at least one field that tested positive for Karnal bunt. Fields within a restricted area fall into one of three categories:

(i) Fields in which preharvest samples tested positive for Karnal bunt;

(ii) Fields known to be planted in the 1995 with seed contaminated with Karnal bunt; or

(iii) All other fields within a distinct definable area with fields in which preharvest samples tested positive.

(2) *Surveillance areas:* A surveillance area is a distinct definable commercial wheat production area in which no fields have tested positive for Karnal bunt, but in which movement of contaminated seed has occurred. Fields within a surveillance area fall into one of three categories:

(i) Fields known to be planted in 1995 with seed contaminated with Karnal bunt; or

(ii) All other fields within a distinct definable area that includes no fields in which preharvest samples tested positive.

(3) Fields in a regulated area for which the Administrator has given no notification of classification to the

owner or the person in possession of the field shall be considered to be fields as described in paragraph (e)(2)(ii) of this section.

(f) The following areas are designated as regulated areas, and those areas are divided into restricted areas or surveillance areas as indicated below:

Arizona

Cochise County. The entire county.

(1) *Restricted areas.* None.

(2) *Surveillance areas.* The entire regulated area.

Graham County. The entire county.

(1) *Restricted areas.* Beginning at the intersection of Highway 70 and Black Rock Road; then due east 5 miles along an imaginary line to the northeast corner of Section 4 in T 5S R24E; then south 9 miles along an imaginary line to the southeast corner of Section 16 in T 6S R24E; then west 8 miles along an imaginary line to the southwest corner of Section 17 in T 6S R23E; then north 9 miles along an imaginary line to the northwest corner of Section 5 in T 5S R23E; then east along an imaginary line to the point of beginning.

(2) *Surveillance areas.* All other areas within the regulated area.

LaPaz County. The entire county.

(1) *Restricted areas.* Beginning at the intersection of Cibola Road and Baseline Road; then south 2.5 miles on Cibola Road; then west to Cibola Lake Road; then north along Cibola Lake Road to its intersection with Cibola Road; then south on Cibola Road to the point of beginning;

T 3N R11W; T 2N R11W, Sections 1–24;

T 7N R11W, Sections 1–3, Sections 10–15, Sections 22–27, and Sections 34–36; T 7N R10W; and

The Colorado River Indian Reservation.

(2) *Surveillance areas.* All other areas within the regulated area.

Maricopa County. The entire county.

(1) *Restricted areas.* Beginning at the intersection of the northeast corner of T 4S R1E and the Maricopa/Pinal County line; then west along an imaginary line to the northwest corner of T 4S R3W; then due north along an imaginary line to the northeast corner of Section 24 in T 2S R4W; then due west along an imaginary line to the northwest corner of Section 19 in T 2S R5W; then due north along an imaginary line to the northwest corner of Section 19 in T 4N R5W; then due east along an imaginary line following Beardsley Road to its intersection with 40th Street; then due south on 40th Street to its intersection with Broadway Road; then 12 miles from this intersection along an imaginary line to the intersection of the northeast corner of section 25 in T 1S R1E and the Maricopa/Pinal County line; then south along this county line to the point of beginning;

T 7N R10W; T 7N R9W; T 8N R9W; T 7N R8W; T 6N R8W;

T 3N R10W; T 2N R10W, Sections 1–24;

T 5S R10W, Sections 25–36; T 6S R10W, Sections 1–18; and

Beginning at the intersection of Baseline Road and the Maricopa/Pinal County line; then west along Baseline Road to its intersection with Bush Road; then north along Bush Road to its intersection with McDowell Road; then west along McDowell Road to its intersection with Pima Road; then south along Pima Road to its intersection with Price Road; then south along Price Road to its intersection with Baseline Road; then west along Baseline Road to its intersection with 40th Street; then south from this intersection along an imaginary line to its intersection with the Maricopa/Pinal County line; then south, west, and north along this county line to the point of beginning.

(2) *Surveillance areas.* All other areas within the regulated area.

Pima County. Beginning at the intersection of the Pima County line, the Pinal County line, and the Papago Indian Reservation boundary; then east along the Pima County line to its easternmost point; then south along the Pima County line to the Cochise and Santa Cruz County lines; then west along the Pima County line to the United States/Mexico boundary; then west along the United States/Mexico boundary to the Papago Indian Reservation boundary; then north along the Papago Indian Reservation boundary to the point of beginning.

(1) *Restricted areas.* None.

(2) *Surveillance areas.* All other areas in the regulated area.

Pinal County. The entire county.

(1) *Restricted areas.* T 4S R2E; T 4S R3E; T 4S R4E; T 5S R2E; T 5S R3E; T 5S R 4E; T 6S R2E; T 6S R3E; T 6S R 4E; T 4S R14E;

Beginning at the Toltec junction of the Southern Pacific Railroad adjacent to Highway 84; then north along Signal Peak Road to its intersection with Kleck Road; then west on Kleck Road, which becomes Korsten Road; then west on Korsten Road to its intersection with Treckell Road; then south on Treckell Road to its intersection with Shedd Road; then east on Shedd Road to the point of beginning;

Beginning at the intersection of Shay Road and Fast Track Road; then north 7 miles on Fast Track Road to its intersection with Arica Road; then west on Arica Road to its intersection with Tweedy Road; then south on Tweedy Road to its intersection with Shay Road; then east on Shay Road to the point of beginning;

(2) *Surveillance areas.* All other areas within the regulated area.

Yuma County. The entire county.

(1) *Restricted areas.* Beginning at the intersection of 14th Street and Avenue 2E; then west on 14th Street to its intersection with Somerton Avenue; then north on Somerton Avenue to the Arizona/California State line; then east along the State line to a point directly north of the intersection of Avenue 2E and County 8th Street; then south from this intersection along an imaginary line to the intersection of Avenue 2E and 8th Street; then south on Avenue 2E to the point of beginning;

Beginning at the intersection of I–8 and Foothill Boulevard; then south on Foothill Boulevard to its intersection with 12th Street; then west on 12th Street to its intersection with Araby Road; then north 6 miles on Araby Road to the southern edge of Section 16 of T 8S R 22W; then east to the California/Arizona State line; then north along the State line to Laguna Dam; then east along the southern shore of Mittry Lake and continue to the Yuma Proving Grounds boundary line; then south and then east along this boundary line to its intersection with Highway 95; then south along an imaginary line to the point of beginning; and

Beginning on 5th Street at the Kofa junction of the Southern Pacific Railroad; then northwest along 5th Street to the Yuma Proving Grounds boundary line; then west along this boundary line to the intersection of Highway 95; then south along the Gila Mountains Range until it intersects the Barry Goldwater Air Force Range; then east along the Barry Goldwater Air Force Range boundary to its intersection with the southwest corner of Section 6 in T 8S R 13W; then north from that point to the point of beginning.

(2) *Surveillance areas.* All other areas within the regulated area.

California

Imperial County. The entire county.

(1) *Restricted areas.* That portion of Imperial County known as the Bard-Winterhaven area bounded by a line drawn as follows: Beginning at the intersection of the west boundary line of Range 22 East and the California-Arizona State line; then, north along this boundary line to its intersection with the All American Canal; then northeasterly along this canal to its intersection with the south boundary line of Section 25, Township 15 South, Range 23 East; then east along this line to its intersection with the California-Arizona State line; the southerly and westerly along this State line to the point of beginning; and

That portion of Imperial County known as the Palo Verde Valley (in part) bounded by a line drawn as follows: Beginning at the intersection of the Riverside-Imperial County line and the California-Arizona State line; then, westerly and southerly along this State line to its intersection with the north boundary line of Township 10 South; then west along this boundary line to its intersection with the west boundary line of Range 21 East; then north along this boundary line to its intersection with the Riverside-Imperial County line; then easterly along this County line to the point of beginning.

(2) *Surveillance areas.* All other areas within the regulated area.

Riverside County. That portion of Riverside County in the Blythe and Ripley areas bounded by a line drawn as follows: Beginning at the intersection of State Highway 62 and the Riverside-San Bernardino County line, then east along the Riverside-San Bernardino County line to its intersection with the California-Arizona State line; then south along the California-Arizona State line to its intersection with the Riverside-Imperial County line; then west along the Riverside-Imperial County line to its intersection with Graham Pass Road; then northeast along Graham Pass Road to its intersection with Chuckwalla Valley Road; then west and northwest along Chuckwalla Valley Road to its intersection with Interstate Highway 10; then west along Interstate Highway 10 to its intersection with State

Highway 177; then northeast and north along State Highway 177 to its intersection with State Highway 62; then northeast along State Highway 62 to the point of beginning.

(1) *Restricted areas:* That portion of Riverside County known as the Palo Verde Valley (in part) bounded by a line drawn as follows: Beginning at the intersection of the north boundary line of Township 2 South and the California-Arizona State line; then southerly and southwesterly along this State line to its intersection with the Riverside-Imperial County line; then westerly along this county line to its intersection with the west boundary line of Range 21 East; then north along this boundary line to its intersection with the north boundary line of Township 2 South; then east along this boundary line to the point of beginning.

(2) *Surveillance areas:* All other areas within the regulated area.

New Mexico

Dona Ana County. Beginning at the intersection of the Sierra/Dona Ana County line and Interstate 25; then south along Interstate 25 to the Texas State line; then west and south along the New Mexico/Texas State line to the United States/Mexico boundary; then west along the United States/Mexico boundary to the Luna/Dona Ana County line; then north and east along the Dona Ana County line to the point of beginning.

(1) *Restricted areas:* None.

(2) *Surveillance areas:* The entire regulated area.

Hidalgo County. Beginning at the intersection of the Arizona/New Mexico State line and Interstate 10; then east along Interstate 10 to the Hidalgo/Grant County line; then south and east along the Hidalgo County line to the Luna County line; then south along the Hidalgo County line to its southernmost point; then west and north along the Hidalgo county line to point of beginning.

(1) *Restricted areas:* None.

(2) *Surveillance areas:* The entire regulated area.

Luna County. Beginning at the intersection of the Grant/Luna County line and Interstate 10; then east along Interstate 10 to U.S. Highway 180; then north along U.S. Highway 180 to State Route 26; then north along State Route 26 to State Route 27; then north along State Route 27 to the Luna/Sierra County line; then east along the Luna County line to the Dona Ana County line; then south along the Luna County line to the United States/Mexico boundary; then west along the United States/Mexico boundary to the Hidalgo County line; then north along the Luna County line to the point of beginning.

(1) *Restricted areas.* None.

(2) *Surveillance areas.* The entire regulated area.

Sierra County. Beginning at intersection of the Luna/Sierra County line and State Route 27; then north along State Route 27 to State Route 152; then east along State Route 152 to Interstate 25; then south along Interstate 25 to the Dona Ana County line; then west and south to the Luna County line; then west along the Luna/Sierra County line to the point of beginning; and

Beginning at the intersection of the Socorro/Sierra County line and State Route 142; then southeast along State Route 142 to State Route 52; then south along State Route 52 to Interstate 25; then north along Interstate 25 to the Socorro/Sierra County line; then west along the Socorro/Sierra County line to the point of beginning.

(1) *Restricted areas.* None.

(2) *Surveillance areas.* The entire regulated area.

Texas

El Paso County. Beginning at a point on the Rio Grande River due east from the intersection of County Route 659 and County Route 375; then due east along an imaginary line to County Route 659; then north along County Route 659 to Interstate 10; then southeast along Interstate 10 to the El Paso County line; then southwest along the El Paso County line to the Rio Grande River; then north along the Rio Grande River to the point of beginning.

(1) *Restricted areas.* None.

(2) *Surveillance areas.* The entire regulated area.

Hudspeth County. Beginning at the intersection of the El Paso/Hudspeth County line and Interstate 10; then southeast along Interstate 10 to County Route 34; then south along County Route 34 to County Route 192; then due south along an imaginary line to the Rio Grande River; then northwest along the Rio Grande River to the El Paso/Hudspeth County line; then north along the El Paso/Hudspeth County line to the point of beginning.

(1) *Restricted areas.* None.

(2) *Surveillance areas.* The entire regulated area.

§ 301.89–4 Planting.

(a) Wheat, durum wheat, and triticale may be planted in all fields within and outside a regulated area, except as follows:

(1) For the 1996–1997 crop season,[1] wheat, durum wheat, and triticale may not be planted in fields in which preharvest samples conducted by Federal or State official tested positive for Karnal bunt;

(2) For the 1996–1997 crop season,[1] wheat, durum wheat, and triticale may not be planted in fields known to have been planted in 1995 with seed contaminated with Karnal bunt.

(b) Prior to planting, wheat seed, durum wheat seed, and triticale seed to be planted within a regulated area must:

(1) First be sampled and test negative for Karnal bunt; then

(2) If originating within a regulated area, be treated with a fungicide in accordance with § 301.89–13.

§ 301.89–5 Movement of regulated articles from regulated areas.

(a) Any regulated article may be moved from a regulated area into or through an area that is not regulated only if moved under the following conditions:

(1) With a certificate or limited permit issued and attached in accordance with §§ 301.89–6 and 301.89–10;

(2) Without a certificate or limited permit, provided that each of the following conditions is met:

(i) The regulated article was moved into the regulated area from an area that is not regulated;

(ii) The point of origin is indicated on a waybill accompanying the regulated article;

(iii) The regulated article is moved through the regulated area without stopping, or has been stored, packed, or handled at locations approved by an inspector as not posing a risk of contamination with Karnal bunt, or has been treated in accordance with the methods and procedures prescribed in § 301.89–13 while in or moving through any regulated area; and

(iv) The article has not been combined or commingled with other articles so as to lose its individual identity;

(3) Without a certificate or limited permit, provided the regulated article is a soil sample being moved to a laboratory approved by the Administrator[2] to process, test, or analyze soil samples.

(b) When an inspector has probable cause to believe a person or means of conveyance is moving a regulated article, the inspector is authorized to stop the person or means of conveyance to determine whether a regulated article is present and to inspect the regulated article. Articles found to be infected by an inspector, and articles not in compliance with the regulations in this subpart, may be seized, quarantined, treated, subjected to other remedial measures, destroyed, or otherwise disposed of. Any treatments will be in accordance with the methods and procedures prescribed in § 301.89–13.

§ 301.89–6 Issuance of a certificate or limited permit.

(a) An inspector[3] or person operating under a compliance agreement will

[1] The 1996–1997 crop season is that season in which wheat is harvested in 1997.

[2] Criteria that laboratories must meet to become approved to process, test, or analyze soil, and the list of currently approved laboratories, may be obtained from the Animal and Plant Health Inspection Service, Plant Protection and Quarantine, Domestic and Emergency Operations, 4700 River Road Unit 134, Riverdale, Maryland 20737–1236.

[3] Inspectors are assigned to local offices of APHIS, which are listed in local telephone directories. Information concerning such local offices may also be obtained from the Animal and Plant Health Inspection Service, Plant Protection and Quarantine, Domestic and Emergency Operations, 4700 River Road Unit 134, Riverdale, Maryland 20737–1236, or from Karnal Bunt Project, 3658 E. Chipman Rd. Phoenix, Arizona 85040.

issue a certificate for the movement of a regulated article outside a regulated area if he or she determines that the regulated article:

(1) Is eligible for unrestricted movement under all other applicable Federal domestic plant quarantines and regulations;

(2) Is to be moved in compliance with any emergency conditions the Administrator may impose under 7 U.S.C. 150dd to prevent the artificial spread of Karnal bunt;[4] and

(3)(i) Is free of Karnal bunt infestation, based on laboratory results of testing, and history of previous infestation;

(ii) Has been grown, produced, manufactured, stored, or handled in a manner that would prevent infestation or destroy all life stages of Karnal bunt; or

(iii) Has been treated in accordance with methods and procedures prescribed in § 301.89–13.

(b) To be eligible for movement under a certificate, grain from a surveillance area must test negative for Karnal bunt twice, and one of these tests must occur at the means of conveyance or storage facility immediately prior to movement.

(c) An inspector or a person operating under a compliance agreement will issue a limited permit for the movement within or outside the regulated area of a regulated article not eligible for a certificate if the inspector determines that the regulated article:

(1) Is to be moved to a specified destination for specified handling, utilization, or processing (the destination and other conditions to be listed in the limited permit and/or compliance agreement), and this movement will not result in the artificial spread of Karnal bunt because Karnal bunt will be destroyed or the risk mitigated by the specified handling, utilization, or processing;

(2) Is to be moved in compliance with any additional emergency conditions the Administrator may impose under 7 U.S.C. 150dd to prevent the artificial spread of Karnal bunt; and

(3) Is eligible for movement under all other Federal domestic plant quarantines and regulations applicable to the regulated article.

(d) To be eligible for movement under a limited permit, grain from a restricted area must test negative for Karnal bunt twice, and one of these tests must occur at the means of conveyance or storage facility immediately prior to movement.

(e) An inspector shall issue blank certificates and limited permits to a person operating under a compliance agreement in accordance with § 301.89–7 or authorize reproduction of the certificates or limited permits on shipping containers, or both, as requested by the person operating under the compliance agreement. These certificates and limited permits may then be completed and used, as needed, for the movement of regulated articles that have met all of the requirements of paragraph (a) or (b), respectively, of this section.

§ 301.89–7 Compliance agreements.

Persons who grow, handle, or move regulated articles may enter into a compliance agreement[5] if such persons review with an inspector each provision of the compliance agreement, have facilities and equipment to carry out disinfestation procedures or application of chemical materials in accordance with § 301.89–13, and meet applicable State training and certification standards under the Federal Insecticide, Fungicide, and Rodenticide Act, as amended (7 U.S.C. 136b). Any person who enters into a compliance agreement with APHIS must agree to comply with the provisions of this subpart and any conditions imposed under this subpart.

§ 301.89–8 Cancellation of a certificate, limited permit, or compliance agreement.

Any certificate, limited permit, or compliance agreement may be canceled orally or in writing by an inspector whenever the inspector determines that the holder of the certificate or limited permit, or the person who has entered into the compliance agreement, has not complied with this subpart or any conditions imposed under this subpart. If the cancellation is oral, the cancellation will become effective immediately and the cancellation and the reasons for the cancellation will be confirmed in writing as soon as circumstances allow, but within 20 days after oral notification of the cancellation. Any person whose certificate, limited permit, or compliance agreement has been canceled may appeal the decision, in writing, within 10 days after receiving the written cancellation notice. The appeal must state all of the facts and reasons that the person wants the Administrator to consider in deciding the appeal. A hearing may be held to resolve any conflict as to any material fact. Rules of practice for the hearing will be adopted by the Administrator. As soon as practicable, the Administrator will grant or deny the appeal, in writing, stating the reasons for the decision.

§ 301.89–9 Assembly and inspection of regulated articles.

(a) Persons requiring certification or other services must request the services of an inspector[6] at least 24 hours before the services are needed.

(b) The regulated articles must be assembled at the place and in the manner the inspector designates as necessary to comply with this subpart.

§ 301.89–10 Attachment and disposition of certificates and limited permits.

(a) The consignor must ensure that the certificate or limited permit authorizing movement of a regulated article is, at all times during movement, attached to:

(1) The outside of the container encasing the regulated article;

(2) The article itself, if it is not in a container; or

(3) The consignee's copy of the accompanying waybill: Provided, that the descriptions of the regulated article on the certificate or limited permit, and on the waybill, are sufficient to identify the regulated article; and

(b) The carrier must furnish the certificate or limited permit authorizing movement of a regulated article to the consignee at the shipment's destination.

§ 301.89–11 Costs and charges.

The services of the inspector during normal business hours will be furnished without cost to persons requiring the services.

The user will be responsible for all costs and charges arising from inspection and other services provided outside of normal business hours.

§ 301.89–12 Cleaning and disinfection.

(a) Used mechanized cultivating equipment, used seed-conditioning equipment, used mechanized harvesting equipment, used farm tools, and used mechanized soil-moving equipment must be cleaned and disinfected in accordance with § 301–89–12 prior to movement from a regulated area and, within a regulated area, prior to movement from a field that tested positive for Karnal bunt during the 1996–97 crop season.

[4] Section 105 of the Federal Plant Pest Act (7 U.S.C. 105dd) authorizes the Secretary of Agriculture to impose emergency measures necessary to prevent the spread of plant pests new to, or not widely prevalent or distributed within and throughout, the United States.

[5] Compliance agreements may be initiated by contacting a local office of Plant Protection and Quarantine, which are listed in telephone directories. The addresses and telephone numbers of local offices of Plant Protection and Quarantine may also be obtained from the Animal and Plant Health Inspection Service, Plant Protection and Quarantine, 4700 River Road Unit 134, Riverdale, Maryland 20737–1236, or from the Karnal Bunt Project, 3658 E. Chipman Rd., Phoenix, Arizona 85040.

[6] See footnote 3.

(b) Prior to movement from a regulated area, vegetable crops must be cleaned of all soil and plant debris, or be moved under limited permit to processing facilities approved by the Administrator.

§ 301.89–13 Treatments.

(a) All conveyances, mechanized farm equipment, seed-conditioning equipment, soil-moving equipment, farm tools, grain elevators and structures used for storing and handling wheat, durum wheat, or triticale required to be cleaned and disinfected under this subpart must be cleaned by removing all soil and plant debris and disinfected by one of the methods specified in paragraph (a)(1) through (a)(4). The treatment used must be that specified by an inspector if that treatment is deemed most effective in a given situation:

(1) Wetting all surfaces to the point of runoff with a solution of 1.5 percent sodium hypochlorite—e.g., with a solution of sodium hypochlorite mixed with water applied at the rate of 1 gallon of household chlorine bleach (5.2 percent sodium hypochlorite) mixed with 2.5 gallons of water—and letting stand for 15 minutes. The equipment or site should be thoroughly washed down after 15 minutes to minimize corrosion; or

(2) Applying steam to all surfaces until the point of runoff, and so that a critical temperature of 170 °F is reached at the point of contact;

(3) Cleaning with a solution of hot water and detergent, applied under pressure of at least 30 pounds per square inch, at a minimum temperature of 180 °F; or

(4) Fumigating with methyl bromide at the dosage of 15 pounds/1000 cubic feet for 96 hours.

(b) Soil, and straw/stalks/seed heads for decorative purposes must be treated by fumigation with methyl bromide at the dosage of 15 pounds/1000 cubic feet for 96 hours, except that straw may move outside the regulated area without treatment if it has been processed or manufactured prior to movement, and is intended for use indoors.

(c) Millfeed must be treated with a moist heat treatment of 170° F for at least 1 minute if the millfeed resulted from the milling of grain from one of the following types of fields:

(1) Fields in which preharvest samples test positive for Karnal bunt during the 1996–1997 crop season; and

(2) Fields located in a restricted area.

(d) Seed for planting must be treated either:

(1) With 6.8 fl. oz. of Carboxin thiram (10 percent + 10 percent, 0.91 + 0.91 lb. ai./gal.) flowable liquid and 3 fluid ounces of pentachloronitrobenzene (2.23 lb. ai./gal.) per 100 pounds of seed; or

(2) With 4.0 fluid ounces of Carboxin thiram (1.67 + 1.67 lb. ai./gal.) flowable liquid and 3 fluid ounces of pentachloronitrobenzene (2.23 lb. ai./gal.) per 100 pounds of seed.

(e) Seed used for germplasm or for research purposes must be treated with a 1.5 percent aqueous solution of sodium hypochlorite (=30 percent household bleach) containing 2 ml. of Tween 20™ per liter agitated for 10 minutes at room temperature followed by a 15-minute rinse with clean, running water and then by drying, and either:

(1) With 6.8 fl. oz. of Carboxin thiram (10 percent + 10 percent, 0.91 + 0.91 lb. ai./gal.) flowable liquid and 3 fluid ounces of pentachloronitrobenzene (2.23 lb. ai./gal.) per 100 pounds of seed; or

(2) With 4.0 fluid ounces of Carboxin thiram (1.67 + 1.67 lb. ai./gal.) flowable liquid and 3 fluid ounces of pentachloronitrobenzene (2.23 lb. ai./gal.) per 100 pounds of seed.

(f) Bags, sacks, and containers used for seed infected with the pathogen of Karnal bunt must be fumigated with methyl bromide at the dosage of 15 pounds/1000 cubic feet for 96 hours.

* * * * *

Appendix to Subpart—Karnal Bunt

CONDITIONS FOR WHEAT PRODUCTION AND UTILIZATION IN A REGULATED AREA

	Definition	Host planting	Seed	Decontamination	Millfeed	Survey	Disposition of grain
Restricted area Category:							
1	Fields in which preharvest samples tested positive.	No host planting in 1996–97 crop season.	Not applicable.	Equipment movement outside regulated area: cleaned and sanitized. Movement within: no restrictions.	Not applicable.	Not applicable.	Not applicable
2	Fields planted with known contaminated seed in 1995.	No host planting in 1996–97 crop season.	Not applicable.	Equipment movement outside regulated area: cleaned and sanitized. Movement within: no restrictions.	Not applicable.	Not applicable.	Not applicable
3	All other fields within restricted area.	No restrictions.	Tested and, if from regulated area, treated prior to planting.	Equipment movement outside regulated area: cleaned and sanitized. Movement within: no restrictions, except from fields testing positive in the 1996–97 crop season.	Required unless destination State controls disposition/movement.	Double-tested: Sampled in field at harvest; composite sample prior to movement.	Movement of grain testing positive restricted; grain testing negative may move under limited permit to designated facilities under safeguard and sanitation conditions

CONDITIONS FOR WHEAT PRODUCTION AND UTILIZATION IN A REGULATED AREA

	Definition	Host planting	Seed	Decontamination	Millfeed	Survey	Disposition of grain
Surveillance area							
4	Fields planted with known contaminated seed in 1995.	No host planting in 1996–97 crop season.	Not applicable.	Equipment movement outside regulated area: cleaned and sanitized. Movement within: no restrictions.	Not applicable.	Not applicable.	Not applicable.
5	All other fields located in definable area where no fields in risk level 1 are located.	No restrictions.	Tested and, if from regulated area, treated prior to planting.	Equipment movement outside regulated area: cleaned and sanitized. Movement within: no restrictions, except from fields testing positive in the 1996–97 crop season.	Not required	Double-tested: Sampled in field at harvest; composite sample prior to movement.	Movement of grain testing positive restricted; grain testing negative may move under certificate. Safeguard and sanitation of railcars not required.

Definitions:

Distinct, definable area: A commercial wheat production area of contiguous fields that is separated from other wheat production areas by desert, mountains, or other nonagricultural terrain as determined by an inspector, or in the case of restricted areas, as determined by an inspector based on survey results, including the number of positive fields and the relative spore count of the fields within the area.

Regulated area: The area defined in part 301.89–3; includes each State or portion of a State that is infested or associated with Karnal bunt contaminated seed.

Restricted area: A distinct, definable, commercial wheat production area that includes at least one field that tested positive for Karnal bunt.

Surveillance area: A distinct, definable, commercial wheat production area in which no fields have tested positive for Karnal bunt, but movement of contaminated seed has occurred.

Done in Washington, DC, this 1st day of October 1996.

A. Strating,

Acting Administrator, Animal and Plant Health Inspection Service.

[FR Doc. 96–25549 Filed 10–1–96; 3:46 pm]

BILLING CODE 3410–34–P

federal register

Friday
October 4, 1996

Part VI

Department of Housing and Urban Development

Office of the Secretary

24 CFR Part 1, et al.

Consolidated HUD Hearing Procedures for Civil Rights Matters; Final Rule

DEPARTMENT OF HOUSING AND URBAN DEVELOPMENT

Office of the Secretary

24 CFR Parts 1, 2, 8, 103, 104, 146, and 180

[Docket No. FR–4077–F–01]

RIN 2501–AC27

Consolidated HUD Hearing Procedures for Civil Rights Matters

AGENCY: Office of the Secretary, HUD.

ACTION: Final rule.

SUMMARY: This final rule consolidates HUD's hearing procedures for nondiscrimination and equal opportunity matters in a new 24 CFR part 180. Currently, the hearing procedures established under the various civil rights statutory authorities are described in different parts of title 24. The consolidation of these procedures will eliminate redundancy from title 24, present uniformity, and assist in HUD's efforts to streamline the contents of its regulations. Additionally, this final rule makes appropriate adjustments in stated penalty amounts pursuant to the Debt Collection Improvement Act of 1996.

EFFECTIVE DATE: November 4, 1996.

FOR FURTHER INFORMATION CONTACT: Carole W. Wilson, Associate General Counsel for Litigation and Fair Housing Enforcement, or Harry L. Carey, Assistant General Counsel for Fair Housing Enforcement, Department of Housing and Urban Development, 451 Seventh Street, SW, Room 10270, Washington, DC 20410, telephone number (202) 708–0570 (this number is not toll-free). Hearing- or speech-impaired persons may access this number via TTY by calling the toll-free Federal Information Relay Service at 1–800–877–8339.

SUPPLEMENTARY INFORMATION:

I. Background

A. Consolidating HUD's Civil Rights Hearing Procedures

On March 4, 1995, President Clinton issued a memorandum to all Federal departments and agencies regarding regulatory reinvention. In response to this memorandum, HUD conducted a page-by-page review of its regulations to determine which could be eliminated, consolidated, or otherwise improved. As a result of this review, HUD has decided to streamline its regulations governing the hearing procedures for civil rights matters.

Currently, the procedures for administrative hearings under the various statutory civil rights authorities are described in different parts of title 24. For example, HUD's regulations governing administrative proceedings under the Fair Housing Act (42 U.S.C. 3601–3619) are found at 24 CFR part 104. The HUD regulations describing the hearing procedures under title VI of the Civil Rights Act of 1964 (42 U.S.C. 2000d–1) and the Age Discrimination Act of 1975 (42 U.S.C. 6103) are located at 24 CFR part 2. The procedures for hearings under section 504 of the Rehabilitation Act of 1973 (29 U.S.C. 794) are found at 24 CFR part 8.

Many of these regulations contain nearly identical provisions. In order to eliminate redundancy from title 24 of the Code of Federal Regulations, HUD is consolidating its civil rights hearing procedures in a new 24 CFR part 180. The establishment of a uniform set of hearing procedures will also assist in reducing confusion among HUD program participants, who in the past were faced with separate implementing HUD regulations for each civil rights statutory authority. This final rule also assists participants in HUD programs by making several clarifying, non-substantive, revisions to the existing civil rights hearing procedures. On April 23, 1996 (61 FR 18026), HUD published a rule for public comment proposing to consolidate many of its non-civil rights hearing procedures in 24 CFR part 26. The rule finalizing the April 23, 1996 proposed rule was published on September 24, 1996 (61 FR 50208), and takes effect on October 24, 1996.

New 24 CFR part 180 extends to all nondiscrimination hearings many procedures that previously were found only in the regulations governing hearings under the Fair Housing Act. In the seven years since HUD published 24 CFR part 104 (54 FR 3298, January 23, 1989), these procedures have assisted parties in obtaining equitable resolutions to complaints of unlawful discrimination. Because of this success, 24 CFR part 180 adopts many of these procedures for use in administrative hearings under other civil rights authorities. For instance, § 180.445 incorporates the settlement judge process that was developed by HUD's administrative law judges to resolve cases without the need for hearings. This rule also requires the parties to exchange exhibits and lists of witnesses prior to a hearing (See §§ 180.440 and 180.645).

B. Changes to Title 24

In addition to establishing new part 180, this final rule makes several necessary conforming amendments to HUD's regulations in title 24. For example, 24 CFR part 2 (Practice and Procedure for Hearings Under Title VI of the Civil Rights Act of 1964) and 24 CFR part 104 (Administrative Proceedings Under Section 812 of the Fair Housing Act), are rendered obsolete by the consolidated hearing procedures in new part 180. Accordingly, the final rule removes these parts from title 24. This rule also amends the following HUD regulations to remove any provisions describing nondiscrimination hearing procedures and to reference new 24 CFR part 180:

1. 24 CFR part 1 (Nondiscrimination in Federally Assisted Programs of the Department of Housing and Urban Development—Effectuation of Title VI of the Civil Rights Act of 1964);
2. 24 CFR part 8 (Nondiscrimination Based On Handicap in Federally assisted Programs and Activities of the Department of Housing and Urban Development);
3. 24 CFR part 103 (Fair Housing—Complaint Processing); and
4. 24 CFR part 146 (Nondiscrimination on the Basis of Age in HUD Programs or Activities Receiving Federal Financial Assistance).

C. The Debt Collection Improvement Act of 1996

Pursuant to the Federal Civil Penalties Inflation Adjustment Act of 1990 (28 U.S.C. 2461 note; Pub. L. 101–410, approved October 5, 1990; 104 Stat. 890), as amended by the Debt Collection Improvement Act of 1996 (31 U.S.C. 3701 note; Pub. L. 104–134, approved April 26, 1996; 110 Stat. 1321–358), each Federal agency is required to issue regulations adjusting for inflation the maximum civil money penalties that can be imposed pursuant to such agency's statutes. This final rule adjusts the penalty amounts formerly described in § 104.910 and set forth in § 180.607 of this final rule.

II. Justification for Final Rulemaking

In accordance with its own regulations on rulemaking in 24 CFR part 10, HUD generally publishes a rule for public comment before issuing a rule for effect. However, part 10 provides an exception to the public comment requirement if the agency finds good cause to omit advance notice and public participation. The good cause requirement is satisfied when public comment is ''impracticable, unnecessary, or contrary to the public interest'' (24 CFR 10.1). HUD finds that in this case it is unnecessary to solicit public comment prior to publication of the rule for effect.

This final rule consolidates HUD's regulations governing nondiscrimination hearing procedures in a new 24 CFR part 180. Currently, the administrative hearing procedures under the various civil rights statutory authorities are described in different parts of title 24. Many of these regulations contain nearly identical provisions. Consolidation of these requirements in a single part will eliminate redundancy, streamline the content of title 24, and establish uniformity. Although this final rule makes several clarifying revisions to the existing nondiscrimination hearing procedures, it does not affect or establish substantive policy.

This rule also amends the maximum penalty amounts which may be imposed pursuant to a nondiscrimination hearing. These amendments are mandated by Debt Collection Improvement Act of 1996. Accordingly, it is unnecessary for HUD to solicit public comment on the adjustments to the penalty amounts.

III. Findings and Certifications

Executive Order 12866, Regulatory Planning and Review

This final rule was reviewed by the Office of Management and Budget under Executive Order 12866, *Regulatory Planning and Review*. Any changes made to the final rule as a result of that review are clearly identified in the docket file, which is available for public inspection in the office of the Department's Rules Docket Clerk, Room 10276, 451 Seventh Street, SW, Washington, DC 20410–0500.

Unfunded Mandates Reform Act

The Secretary has reviewed this rule before publication and by approving it certifies, in accordance with the Unfunded Mandates Reform Act of 1995 (2 U.S.C. 1532), that this rule does not impose a Federal mandate that will result in the expenditure by State, local, and tribal governments, in the aggregate, or by the private sector, of $100 million or more in any one year.

Regulatory Flexibility Act

The Secretary, in accordance with the Regulatory Flexibility Act (5 U.S.C. 605(b)), has reviewed and approved this final rule, and in so doing certifies that this rule will not have a significant economic impact on a substantial number of small entities. As part of HUD's continuing efforts to implement the President's regulatory reform initiative, and to eliminate redundancy from title 24, this rule consolidates HUD's nondiscrimination hearing procedures. This final rule establishes a new 24 CFR part 180 which sets forth a uniform set of hearing procedures for civil rights matters. The rule will have no adverse or disproportionate economic impact on small entities.

Environmental Impact

In accordance with 40 CFR 1508.4 of the regulations of the Council on Environmental Quality and 24 CFR 50.20(k) of HUD regulations, the policies and procedures contained in this rule relate only to hearing procedures and administrative law decisions, which do not constitute development decisions and do not affect the physical condition of a project area or building site. Therefore, this rule categorically is excluded from the requirements of the National Environmental Policy Act.

Executive Order 12612, Federalism

The General Counsel, as the Designated Official under section 6(a) of Executive Order 12612, Federalism, has determined that this rule will not have substantial direct effects on States or their political subdivisions, or the relationship between the Federal government and the States, or on the distribution of power and responsibilities among the various levels of government. This final rule merely consolidates HUD's nondiscrimination hearing procedures. No programmatic or policy changes will result from this rule that would affect the relationship between the Federal Government and State and local governments.

Executive Order 12606, The Family

The General Counsel, as the Designated Official under Executive Order 12606, The Family, has determined that this rule will not have the potential for significant impact on family formation, maintenance, or general well-being, and thus is not subject to review under the Order. This final rule eliminates redundancy from title 24 by consolidating HUD's nondiscrimination hearing procedures in a new 24 CFR part 180. No significant change in existing HUD policies or programs will result from promulgation of this rule.

List of Subjects

24 CFR Part 1

Administrative practice and procedure, Civil rights, Reporting and recordkeeping requirements.

24 CFR Part 2

Administrative practice and procedure, Civil rights.

24 CFR Part 103

Administrative practice and procedure, Aged, Fair housing, Individuals with disabilities, Intergovernmental relations, Investigations, Mortgages, Penalties, Reporting and recordkeeping requirements.

24 CFR Part 104

Administrative practice and procedure, Aged, Fair housing, Individuals with disabilities, Mortgages, Penalties.

24 CFR Part 146

Administrative practice and procedure, Aged, Civil rights, Grant programs—housing and community development, Loan programs—housing and community development, Reporting and recordkeeping requirements.

24 CFR Part 180

Administrative practice and procedure, Aged, Civil rights, Fair housing, Individuals with disabilities, Intergovernmental relations, Investigations, Mortgages, penalties, Reporting and recordkeeping requirements.

Accordingly, title 24 of the Code of Federal Regulations is amended as follows:

PART 1—NONDISCRIMINATION IN FEDERALLY ASSISTED PROGRAMS OF THE DEPARTMENT OF HOUSING AND URBAN DEVELOPMENT—EFFECTUATION OF TITLE VI OF THE CIVIL RIGHTS ACT OF 1964

1. The authority citation for 24 CFR part 1 is revised to read as follows:

Authority: 42 U.S.C. 2000d-1 and 3535(d).

2. Section 1.9 is amended by revising paragraph (b) and removing paragraph (c), (d), and (e), to read as follows:

§ 1.9 Hearings.

* * * * *

(b) *Hearing procedures.* Hearings shall be conducted in accordance with 24 CFR part 180.

§§ 1.10,1.11 [Removed]

3. Sections 1.10 and 1.11 are removed.

§ 1.112 [Redesignated as § 1.10]

4. Section 1.12 is redesignated as § 1.10.

PART 2—[REMOVED]

5. Under the authority of 42 U.S.C. 3535(d), Part 2 is removed.

PART 8—NONDISCRIMINATION BASED ON HANDICAP IN FEDERALLY ASSISTED PROGRAMS AND ACTIVITIES OF THE DEPARTMENT OF HOUSING AND URBAN DEVELOPMENT

6. The authority citation for part 8 is revised to read as follows:

Authority: 29 U.S.C. 794; 42 U.S.C. 3535(d) and 5309.

7. Section 8.58 is amended by revising paragraph (b) and by removing paragraphs (c), (d), and (e), to read as follows:

§ 8.58 Hearings.

* * * * *

(b) *Hearing procedures.* Hearings shall be conducted in accordance with 24 CFR part 180.

8. Section 8.59 and subpart E, consisting of §§ 8.60 through 8.71, are removed.

PART 103—FAIR HOUSING—COMPLAINT PROCESSING

9. The authority citation for 24 CFR part 103 continues to read as follows:

Authority: 42 U.S.C. 3601–19; 42 U.S.C. 3535(d).

§§ 103.45, 103.50, 103.100, 103.115, 103.215, 103.330, 103.405, 103.410, 103.500 [Amended]

10. Sections 103.45, 103.50, 103.100, 103.115, 103.215, 103.330, 103.405, 103.410, 103.500 are amended by replacing all references to ''part 104'' with ''part 180.''

PART 104—[REMOVED]

11. Under the authority of 42 U.S.C. 3535(d), Part 104 is removed.

PART 146—NONDISCRIMINATION ON THE BASIS OF AGE IN HUD PROGRAMS OR ACTIVITIES RECEIVING FEDERAL FINANCIAL ASSISTANCE

12. The authority citation for 24 CFR part 146 is revised to read as follows:

Authority: 42 U.S.C. 3535(d) and 6103.

13. Section 146.43 is revised to read as follows:

§ 146.43 Hearings, decisions, post-termination proceedings.

The provisions of 24 CFR part 180 apply to HUD enforcement of this part.

14. A new part 180 is added to read as follows:

PART 180—HEARING PROCEDURES FOR CIVIL RIGHTS MATTERS

Subpart A—General Information

Sec.
180.100 Definitions.
180.105 Scope of rules.

Subpart B—Administrative Law Judge

180.200 Designation.
180.205 Authority.
180.210 Withdrawal or disqualification of ALJ.
180.215 Ex Parte communications.
180.220 Separation of functions.

Subpart C—Parties

180.300 Rights of parties.
180.305 Representation.
180.310 Parties.
180.315 Standards of conduct.

Subpart D—Proceedings Prior to Hearing

180.400 Service and filing.
180.405 Time computations.
180.410 Charges under the Fair Housing Act.
180.415 Notice of proposed adverse action regarding Federal financial assistance in Non-Fair Housing Act matters.
180.420 Answer.
180.425 Amendments to pleadings.
180.430 Motions.
180.435 Prehearing statements.
180.440 Prehearing conferences.
180.445 Settlement negotiations before a settlement judge.
180.450 Resolution of charge or notice of proposed adverse action.

Subpart E—Discovery

180.500 Discovery.
180.505 Supplementation of responses.
180.510 Interrogatories.
180.515 Depositions.
180.520 Use of deposition at hearings.
180.525 Requests for production of documents or things for inspection or other purposes, including physical and mental examinations.
180.530 Requests for admissions.
180.535 Protective orders.
180.540 Motion to compel discovery.
180.545 Subpoenas.

Subpart F—Procedures at Hearing

180.600 Date and place of hearing.
180.605 Conduct of hearings.
180.610 Waiver of right to appear.
180.615 Failure of party to appear.
180.620 Evidence.
180.625 Record of hearing.
180.630 Stipulations.
180.635 Written testimony.
180.640 In camera and protective orders.
180.645 Exhibits.
180.650 Public document items.
180.655 Witnesses.
180.660 Closing of record.
180.665 Arguments and briefs.
180.670 Initial decision of ALJ.
180.675 Petitions for review.
180.680 Final decisions.

Subpart G—Post-Final Decision in Fair Housing Cases

180.700 Action upon issuance of a final decision in Fair Housing Act cases.
180.705 Attorney's fees and costs.
180.710 Judicial review of final decision.
180.715 Enforcement of final decision.

Subpart H—Post-Final Decision in Non-Fair Housing Act Matters

180.800 Post-termination proceedings.
180.805 Judicial review of final decision.

Authority: 29 U.S.C. 794; 42 U.S.C. 2000d–1 3535(d), 3601–3619; 5301–5320, and 6103.

Subpart A—General Information

§ 180.100 Definitions.

As used in this part:

(a) The terms *ALJ, Department, Fair Housing Act, General Counsel,* and *HUD* are defined in 24 CFR part 5, subpart A.

(b) The terms *Aggrieved Person, Assistant Secretary, Attorney General, Discriminatory Housing Practice, Person,* and *State* are defined in 24 CFR part 103, subpart A.

(c) *Agency* has the same meaning as *HUD.*

Applicant and *Application* have the meanings provided in 24 CFR 1.2 or 24 CFR 8.3, as applicable.

Charge means the statement of facts issued under 24 CFR 103.405 upon which HUD has found reasonable cause to believe that a discriminatory housing practice has occurred or is about to occur.

Chief Docket Clerk is the docket clerk for HUD's Office of ALJs, 409 Third Street, SW, Suite 320, Washington, DC 20024. Telephone numbers are (202) 708–5004 and FAX (202) 708–5014.

Complaint means a complaint filed under the statutes covered by this part.

Complainant means the person (including the Assistant Secretary) who filed a complaint under the statutes covered by this part.

Fair Housing Act matters refers to proceedings under this part pursuant to the Fair Housing Act and the implementing regulations at 24 CFR parts 100 and 103.

Federal financial assistance has the meaning provided in 24 CFR 1.2, 24 CFR 8.3, or 24 CFR 146.7, as applicable.

Hearing means a trial-type proceeding that involves the submission of evidence, either by oral presentation or written submission, and briefs and oral arguments on the evidence and applicable law.

Intervenor is a person entitled by law or permitted by the ALJ to participate as a party.

Non-Fair Housing Act matters refers to proceedings under this part pursuant to:

(1) Title VI of the Civil Rights Act of 1964 (42 U.S.C. 2000d–1) and the

implementing regulations at 24 CFR part 1;

(2) Section 504 of the Rehabilitation Act of 1973, as amended (29 U.S.C. 794) and the implementing regulations at 24 CFR part 8; or

(3) The Age Discrimination Act of 1975 (42 U.S.C. 6103) and the implementing regulations at 24 CFR part 146.

Notice of Proposed Adverse Action is the statement of facts issued pursuant to a non-Fair Housing Act matter upon which HUD has found reason to terminate or refuse to grant or continue Federal financial assistance.

Party is a person who has full participation rights in a proceeding under this part.

Prevailing party has the same meaning as the term has in section 722 of the Revised Statutes of the United States (42 U.S.C. 1988).

Recipient has the meaning provided in 24 CFR 1.2, 24 CFR 8.3, or 24 CFR 146.7, as applicable.

Respondent means the person accused of violating one of the statutes covered by this part, including a recipient.

Secretary means the Secretary of HUD, or to the extent of any delegation of authority by the Secretary to act under any of the statutory authorities listed in § 180.105(a), any other HUD official to whom the Secretary may hereafter delegate such authority.

§ 180.105 Scope of rules.

(a) This part contains the rules of practice and procedure applicable to administrative proceedings before an ALJ under the following authorities:

(1) The Fair Housing Act (42 U.S.C. 3601–3619) and the implementing regulations at 24 CFR parts 100 and 103, where no election to proceed in federal district court has been made;

(2) Title VI of the Civil Rights Act of 1964 (42 U.S.C. 2000d–1), and the implementing regulations at 24 CFR part 1;

(3) Section 504 of the Rehabilitation Act of 1973, as amended (29 U.S.C. 794), and the implementing regulations at 24 CFR part 8; and

(4) The Age Discrimination Act of 1975 (42 U.S.C. 6103), and the implementing regulations at 24 CFR part 146.

(b) In the absence of a specific provision, the Federal Rules of Civil Procedure shall serve as a general guide.

(c) Hearings under this part shall be conducted as expeditiously and inexpensively as possible, consistent with the needs and rights of the parties to obtain a fair hearing and a complete record.

(d) Except to the extent that a waiver would otherwise be contrary to law, the ALJ may, after adequate notice to all interested persons, modify or waive any of the rules in this part upon a determination that no person will be prejudiced and that the ends of justice will be served.

(e) All pleadings, correspondence, exhibits, transcripts of testimony, exceptions, briefs, decisions, and other documents filed in any proceeding may be inspected in the Chief Docket Clerk's office during regular business hours.

Subpart B—Administrative Law Judge

§ 180.200 Designation.

Proceedings under this part shall be presided over by an ALJ appointed under 5 U.S.C. 3105. HUD's Chief ALJ shall designate the presiding ALJ.

§ 180.205 Authority.

The ALJ shall have all powers necessary to conduct fair, expeditious and impartial hearings, including the power to:

(a) Administer oaths and affirmations and examine witnesses;

(b) Rule on offers of proof and receive evidence;

(c) Take depositions or have depositions taken when the ends of justice would be served;

(d) Regulate the course of the hearing and the conduct of persons at the hearing;

(e) Hold conferences for the settlement or simplification of the issues by consent of the parties;

(f) Rule on motions, procedural requests, and similar matters;

(g) Make and issue initial decisions;

(h) Impose appropriate sanctions against any person failing to obey an order, refusing to adhere to reasonable standards of orderly and ethical conduct, or refusing to act in good faith;

(i) Issue subpoenas if authorized by law; and

(j) Exercise any other powers necessary and appropriate for the purpose and conduct of the proceeding as authorized by the rules in this part or in conformance with statute, including 5 U.S.C. 551–59.

§ 180.210 Withdrawal or disqualification of ALJ.

(a) *Disqualification*. If an ALJ finds that there is a basis for his/her disqualification in a proceeding, the ALJ shall withdraw from the proceeding. Withdrawal is accomplished by entering a notice in the record and providing a copy of the notice to the Chief ALJ.

(b) *Motion for recusal.* If a party believes that the presiding ALJ should be disqualified for any reason, the party may file a motion to recuse with the ALJ. The motion shall be supported by an affidavit setting forth the alleged grounds for disqualification. The ALJ shall rule on the motion, stating the grounds therefor.

(c) *Redesignation of ALJ.* If an ALJ is disqualified, the Chief ALJ shall designate another ALJ to preside over further proceedings.

§ 180.215 Ex Parte communications.

(a) An ex parte communication is any direct or indirect communication concerning the merits of a pending proceeding, made by a party in the absence of any other party, to the presiding ALJ, and which was neither on the record nor on reasonable prior notice to all parties. Ex parte communications do not include communications made for the sole purpose of scheduling hearings, requesting extensions of time, or requesting information on the status of cases.

(b) Ex parte communications are prohibited.

(c) If the ALJ receives an ex parte communication that the ALJ knows or has reason to believe is prohibited, the ALJ shall promptly place the communication, or a written statement of the substance of the communication, in the record and shall furnish copies to all parties. Unauthorized communications shall not be taken into consideration in deciding any matter in issue. Any party making a prohibited ex parte communication may be subject to sanctions including, but not limited to, exclusion from the proceeding and an adverse ruling on the issue that is the subject of the prohibited communication.

§ 180.220 Separation of functions.

No officer, employee, or agent of the Federal Government engaged in the performance of investigative, conciliatory, or prosecutorial functions in connection with the proceeding shall, in that proceeding or any factually related proceeding under this part, participate or advise in the decision of the ALJ, except as a witness or counsel during the proceedings or in its appellate review.

Subpart C—Parties

§ 180.300 Rights of parties.

Each party may appear in person, be represented by counsel, examine or cross-examine witnesses, introduce documentary or other relevant evidence into the record and, in Fair Housing Act matters, request the issuance of subpoenas.

§ 180.305 Representation.

(a) HUD is represented by the General Counsel.

(b) Any party may appear on his/her/its own behalf or by an attorney. Each party or attorney shall file a notice of appearance. The notice must identify the matter before the ALJ, the party on whose behalf the appearance is made, and the mailing address and telephone number of the person appearing. Similar notice shall also be given for any withdrawal of appearance.

(c) An attorney must be admitted to practice before a Federal Court or the highest court in any State. The attorney's representation that he/she is in good standing before any of these courts is sufficient evidence of the attorney's qualifications under this section, unless otherwise ordered by the ALJ.

§ 180.310 Parties.

(a) Parties to proceedings under this part are HUD, the respondent(s), and any intervenor(s). Respondents include persons named as such in a charge issued under 24 CFR part 103, and recipients/applicants named as respondents in hearing notices issued under 24 CFR parts 1, 8, or 146 and notices of proposed adverse action under this part.

(b) An aggrieved person is not a party but may file a motion to intervene. Requests for intervention shall be filed within 50 days after the filing of the charge; however, the ALJ may allow intervention beyond that time. An intervenor's right to participate as a party may be restricted by order of the ALJ pursuant to statute, the rules in this part or other applicable law. Intervention shall be permitted if the person requesting intervention is

(1) The aggrieved person on whose behalf the charge is issued; or

(2) An aggrieved person who claims an interest in the property or transaction that is the subject of the charge and the disposition of the charge may, as a practical matter, impair or impede this person's ability to protect that interest, unless the aggrieved person is adequately represented by the existing parties.

(c) A complainant in a non-Fair Housing Act matter is not a party but may file a motion to become an amicus curiae.

(d) Any person may file a petition to participate in a proceeding under this part as an amicus curiae. An amicus curiae is not a party to the proceeding and may not introduce evidence at the hearing.

(1) A petition to participate as amicus curiae shall be filed before the commencement of the hearing, unless the petitioner shows good cause for filing the petition later. The petition may be granted if the ALJ finds that the petitioner has a legitimate interest in the proceedings, and that such participation will not unduly delay the outcome and may contribute materially to the proper disposition thereof.

(2) The amicus curiae may submit briefs within time limits set by the ALJ or by the Secretary in the event of an appeal to the Secretary.

(3) When all parties have completed their initial examination of a witness, the amicus curiae may request the ALJ to propound specific questions to the witness. Any such request may be granted if the ALJ believes the proposed additional testimony may assist materially in elucidating factual matters at issue between the parties and will not expand the issues.

§ 180.315 Standards of conduct.

(a) All persons appearing in proceedings under this part shall act with integrity and in an ethical manner.

(b) The ALJ may exclude parties or their representatives for refusal to comply with directions, continued use of dilatory tactics, refusal to adhere to reasonable standards of orderly and ethical conduct, failure to act in good faith, or violations of the prohibitions against ex parte communications. If an ALJ suspends or bars an attorney from participating in a proceeding, the ALJ shall include in the record the reasons for such action. An attorney who is suspended or barred from participation may appeal to the Chief ALJ. The proceeding will not be delayed or suspended pending disposition on the appeal, except that the ALJ shall suspend the proceeding for a reasonable time to enable the party to obtain another attorney.

Subpart D—Proceedings Prior to Hearing

§ 180.400 Service and filing.

(a) *Service*—(1) *Service by the Office of ALJs.* The Office of ALJs shall serve all notices, orders, decisions and other such documents by mail to each party and amicus curiae at the last known address.

(2) *Service by others.* A copy of each filed document shall be served on each party and each amicus curiae. Service shall be made upon counsel if a party is represented by counsel. Service on counsel shall constitute service on the party. Service may be made to the last known address by first-class mail or other more expeditious means, such as:

(i) Hand delivery to the person to be served or a person of suitable age and discretion at the place of business, residence, or usual place of abode of the person to be served;

(ii) Overnight delivery; or

(iii) Facsimile transmission or electronic means. The ALJ may place appropriate limits on service by facsimile transmission or electronic means.

(3) *Certificate of service.* Every document served shall be accompanied by a certificate of service containing a statement as to the date of service, the method of service, the parties served and the address at which they were served, which is signed and dated by the person making service.

(b) *Filing*—(1) *Method.* All documents shall be filed with the Chief Docket Clerk. Filing may be by first class mail, delivery, facsimile transmission, or electronic means; however, the ALJ may place appropriate limits on filing by facsimile transmission or electronic means.

(2) *Form.* Every pleading, motion, brief, or other document shall contain a caption setting forth the title of the proceeding, the docket number assigned by the Office of ALJs, and the designation of the type of document (e.g., charge, motion).

(3) *Signature.* Every document filed by a party shall be signed by the party or the party's attorney and must include the signer's address and telephone number. The signature constitutes a certification that: the signer has read the document; to the best of the signer's knowledge, information and belief, the statements made therein are true; and the document is not interposed for delay.

§ 180.405 Time computations.

(a) In computing time under this part, the time period begins the day following the act, event, or default and includes the last day of the period, unless the last day is a Saturday, Sunday, or legal holiday observed by the Federal Government, in which case the time period includes the next business day.

(b) *Modification of time periods.* Except for time periods required by statute, the ALJ may enlarge or reduce any time period required under this part where necessary to avoid prejudicing the public interest or the rights of the parties. Requests for extension of time should set forth the reasons for the request.

(c) *Entry of orders.* In computing any time period involving the date of the ALJ's issuance of an order or decision, the date of issuance is the date of service by the Chief Docket Clerk.

(d) *Computation of time for delivery by mail.* When documents are filed by mail, three days shall be added to the prescribed time period for filing any responsive pleading. Documents are not filed until received by the Chief Docket Clerk.

(e) *Untimely filing.* The ALJ may refuse to consider any motion or other document that is not filed in a timely fashion.

§ 180.410 Charges under the Fair Housing Act.

(a) *Filing and service.* Within three days after the issuance of a charge, the General Counsel shall file the charge with the Chief Docket Clerk and serve copies (with the additional information required under paragraph (b) of this section) on all respondents and aggrieved persons.

(b) *Contents.* The charge shall consist of a short and plain written statement of the facts upon which reasonable cause has been found to believe that a discriminatory housing practice has occurred or is about to occur. A notification shall be served with the charge containing the following information:

(1) Any complainant, respondent, or aggrieved person may elect to have the claims asserted in the charge decided in a civil action under 42 U.S.C. 3612(o), in lieu of an administrative proceeding under this part.

(2) Such election must be made not later than 20 days after receipt of service of the charge by serving written notice of such on the Chief Docket Clerk, each respondent, each aggrieved person on whose behalf the charge was issued, the Assistant Secretary, and the General Counsel.

(3) If no person timely elects to have the claims asserted in the charge decided in a civil action under 42 U.S.C. 3612(o), an administrative proceeding will be conducted under this part.

(4) If an administrative hearing is conducted:

(i) The hearing will be held at a date and place specified.

(ii) The respondent will have an opportunity to file an answer to the charge within 30 days after service of the charge.

(iii) The aggrieved person may participate as a party to the administrative proceeding by filing a request for intervention within 50 days after service of the charge.

(iv) All discovery must be concluded 15 days before the date set for hearing.

(v) The rules in this part will govern the proceeding.

(5) If, at any time following service of the charge on the respondent, the respondent intends to enter into a contract, sale, encumbrance, or lease with any person regarding the property that is the subject of the charge, the respondent must provide a copy of the charge to such person before the respondent and the person enter into the contract, sale, encumbrance or lease.

(c) *Election of judicial determination.* If the complainant, the respondent, or the aggrieved person on whose behalf a complaint was filed makes a timely election to have the claims asserted in the charge decided in a civil action under 42 U.S.C. 3612(o), the Chief ALJ shall dismiss the administrative proceeding.

(d) *Effect of a civil action on administrative proceeding.* An ALJ may not continue an administrative proceeding under the Fair Housing Act after the beginning of the trial of a civil action commenced by the aggrieved person under an act of Congress or a State law seeking relief with respect to that discriminatory housing practice. If such a trial is commenced, the ALJ shall dismiss the administrative proceeding. The commencement and maintenance of a civil action for appropriate temporary or preliminary relief under 42 U.S.C. 3610(e) or 42 U.S.C. 3613 does not affect administrative proceedings under this part.

§ 180.415 Notice of proposed adverse action regarding Federal financial assistance in Non-Fair Housing Act matters.

(a) *Filing and service.* Within 10 days after a recipient/applicant has requested a hearing, as provided for in 24 CFR part 1, 8, or 146, the General Counsel shall file a notice of proposed adverse action with the Chief Docket Clerk and serve copies (with the additional information required under paragraph (b) of this section) on all respondents and complainants.

(b) *Contents.* The notice of proposed adverse action shall consist of a short and plain written statement of the facts and legal authority upon which the proposed action is based. A notification shall be served with the notice containing the following information:

(1) That an administrative hearing will be held at a date and place specified.

(2) That the respondent will have an opportunity to file an answer to the notice of adverse action within 30 days after its service.

(3) That the complainant may participate as an amicus curiae by filing a timely request to do so.

(4) That discovery must be concluded by a date specified.

(5) That the rules specified in this part shall govern the proceeding.

(c) *Consolidation.* The ALJ may provide for non-Fair Housing Act proceedings at HUD to be joined or consolidated for hearing with proceedings in other Federal departments or agencies, by agreement with such other departments or agencies. All parties to any proceeding consolidated subsequent to service of the notice of proposed adverse action shall be promptly served with notice of such consolidation.

§ 180.420 Answer.

(a) Within 30 days after service of the charge or notice of proposed adverse action, a respondent may file an answer. The answer shall include:

(1) A statement that the respondent admits, denies, or does not have and is unable to obtain sufficient information to admit or deny, each allegation made. A statement of lack of information shall have the effect of a denial. Any allegation that is not denied shall be deemed to be admitted.

(2) A statement of each affirmative defense and a statement of facts supporting each affirmative defense.

(b) Failure to file an answer within the 30-day period following service of the charge or notice of proposed adverse action shall be deemed an admission of all matters of fact recited therein and may result in the entry of a default decision.

§ 180.425 Amendments to pleadings.

(a) *By right.* HUD may amend the charge or notice of proposed adverse action once as a matter of right prior to the filing of the answer.

(b) *By leave.* Upon such conditions as are necessary to avoid prejudicing the public interest and the rights of the parties, the ALJ may allow amendments to pleadings upon a motion of a party.

(c) *Conformance to the evidence.* When issues not raised by the pleadings are reasonably within the scope of the original charge or notice of proposed adverse action and have been tried by the express or implied consent of the parties, the issues shall be treated in all respects as if they had been raised in the pleadings, and amendments may be made as necessary to make the pleading conform to evidence.

(d) *Supplemental pleadings.* The ALJ may, upon reasonable notice, permit supplemental pleadings concerning transactions, occurrences or events that have happened or been discovered since the date of the pleadings and which are relevant to any of the issues involved.

§ 180.430 Motions.

(a) *Motions.* Any application for an order or other request shall be made by

a motion which, unless made during an appearance before the ALJ, shall be in writing and shall state the specific relief requested and the basis therefor. Motions made during an appearance before the ALJ shall be stated orally and made a part of the transcript. All parties shall be given a reasonable opportunity to respond to written or oral motions or requests.

(b) *Responses to written motions.* Within seven calendar days after a written motion is served, any party to the proceeding may file a response in support of, or in opposition to, the motion. Unless otherwise ordered by the ALJ, no further responsive documents may be filed. Failure to file a response within the response period constitutes a waiver of any objection to the granting of the motion.

(c) *Oral argument.* The ALJ may order oral argument on any motion.

§ 180.435 Prehearing statements.

(a) Before the commencement of the hearing, the ALJ may direct the parties to file prehearing statements.

(b) The prehearing statement must state the name of the party presenting the statement and, unless otherwise directed by the ALJ, briefly set forth the following:

(1) The issues involved in the proceeding;

(2) The facts stipulated by the parties and a statement that the parties have made a good faith effort to stipulate to the greatest extent possible;

(3) The facts in dispute;

(4) The witnesses (together with a summary of the testimony expected) and exhibits to be presented at the hearing;

(5) A brief statement of applicable law;

(6) Conclusions to be drawn;

(7) Estimated time required for presentation of the party's case; and

(8) Such other information as may assist in the disposition of the proceeding.

§ 180.440 Prehearing conferences.

(a) Before the commencement of or during the course of the hearing, the ALJ may direct the parties to participate in a conference to expedite the hearing. Failure to attend a conference may constitute a waiver of all objections to the agreements reached at the conference and to any order with respect thereto.

(b) During the conference, the ALJ may dispose of any procedural matters on which he/she is authorized to rule. At the conference, the following matters may be considered:

(1) Pre-trial motions;

(2) Identification, simplification and clarification of the issues;

(3) Necessary amendments to the pleadings;

(4) Stipulations of fact and of the authenticity, accuracy, and admissibility of documents;

(5) Limitations on the number of witnesses;

(6) Negotiation, compromise, or settlement of issues;

(7) The exchange of proposed exhibits and witness lists;

(8) Matters of which official notice will be requested;

(9) Scheduling actions discussed at the conference; and

(10) Such other matters as may assist in the disposition of the proceeding.

(c) Conferences may be conducted by telephone or in person, but generally shall be conducted by telephone, unless the ALJ determines that this method is inappropriate. The ALJ shall give reasonable notice of the time, place and manner of the conference.

(d) *Record of conference.* Unless otherwise directed by the ALJ, the conference will not be stenographically recorded. The ALJ will reduce the actions taken at the conference to a written order or, if the conference takes place less than seven days before the beginning of the hearing, may make a statement at the hearing and on the record summarizing the actions taken at the conference.

§ 180.445 Settlement negotiations before a settlement judge.

(a) *Appointment of settlement judge.* The ALJ, upon the motion of a party or upon his or her own motion, may request the Chief ALJ to appoint another ALJ to conduct settlement negotiations. The order appointing the settlement judge may confine the scope of settlement negotiations to specified issues. The order shall direct the settlement judge to report to the Chief ALJ within specified time periods.

(b) *Duties of settlement judge.* (1) The settlement judge shall convene and preside over conferences and settlement negotiations between the parties and assess the practicalities of a potential settlement.

(2) The settlement judge shall report to the Chief ALJ describing the status of the settlement negotiations, evaluating settlement prospects, and recommending the termination or continuation of the settlement negotiations.

(c) *Termination of settlement negotiations.* Settlement negotiations shall terminate upon the order of the chief ALJ issued after consultation with the settlement judge. The conduct of settlement negotiations shall not unduly delay the commencement of the hearing.

§ 180.450 Resolution of charge or notice of proposed adverse action.

At any time before a final decision is issued, the parties may submit to the ALJ an agreement resolving the charge or notice of proposed adverse action. A charge under the Fair Housing Act can only be resolved with the agreement of the aggrieved person on whose behalf the charge was issued. If the agreement is in the public interest, the ALJ shall accept it by issuing an initial decision and consent order based on the agreement.

Subpart E—Discovery

§ 180.500 Discovery.

(a) *In general.* This subpart governs discovery in aid of administrative proceedings under this part. Discovery in Fair Housing Act matters shall be completed 15 days before the date scheduled for hearing or at such time as the ALJ shall direct. Discovery in non-Fair Housing Act matters shall be completed as the ALJ directs.

(b) *Scope.* The parties are encouraged to engage in voluntary discovery procedures. Discovery shall be conducted as expeditiously and inexpensively as possible, consistent with the needs of all parties to obtain relevant evidence. Unless otherwise ordered by the ALJ, the parties may obtain discovery regarding any matter, not privileged, that is relevant to the subject matter involved in the proceeding, including the existence, description, nature, custody, condition, and location of documents or persons having knowledge of any discoverable matter. It is not grounds for objection that information sought will be inadmissible if the information appears reasonably calculated to lead to the discovery of admissible evidence.

(c) *Methods.* Parties may obtain discovery by one or more of the following methods:

(1) Deposition upon oral examination or written questions.

(2) Written interrogatories.

(3) Requests for the production of documents or other evidence for inspection and other purposes.

(4) Requests for admissions.

(5) Upon motion of a party, the presiding ALJ may issue an order requiring a physical or mental examination of a party or of a person in the custody or under the legal control of a party.

(d) *Frequency and sequence.* Unless otherwise ordered by the ALJ or restricted by this subpart, the frequency

or sequence of these methods is not limited.

(e) *Non-intervening aggrieved person.* For purposes of obtaining discovery from a non-intervening aggrieved person, the term *party* as used in this subpart includes the aggrieved person.

§ 180.505 Supplementation of responses.

A party is under a duty, in a timely fashion, to:

(a) Supplement a response with respect to any question directly addressed to:

(1) The identity and location of persons having knowledge of discoverable matters; and

(2) The identity of each person expected to be called as an expert witness, the subject matter on which the expert witness is expected to testify, and the substance of the testimony.

(b) Amend a response if the party later obtains information upon the basis of which:

(1) The party knows the response was incorrect when made, or

(2) The party knows the response, though correct when made, is no longer true, and the circumstances are such that a failure to amend the response is, in substance, a knowing concealment.

(c) Supplement other responses, as imposed by order of the ALJ or by agreement of the parties.

§ 180.510 Interrogatories.

(a) Any party may serve on any other party written interrogatories to be answered by the party served. If the party served is a public or private corporation, a partnership, an association, or a governmental agency, the interrogatories may be answered by any authorized officer or agent who shall furnish such information as may be available to the party. A party may serve not more than 30 written interrogatories on another party without an order of the ALJ.

(b) Each interrogatory shall be answered separately and fully in writing under oath or affirmation, unless it is objected to, in which event, the reasons for the objection shall be stated in lieu of an answer. The answers shall be signed by the person making them, and the objections may be signed by the attorney or other representative making them. The answers and objections shall be served within 15 days after service of the interrogatories.

(c) It is a sufficient answer to an interrogatory to specify the records from which the answer may be derived or ascertained if:

(1) The answer to the interrogatory may be derived or ascertained from the records of the party on whom the interrogatory has been served or from an examination, audit or inspection of such records, or from a compilation, abstract or summary based thereon, and

(2) The burden of deriving or ascertaining the answer is substantially the same for the party serving the interrogatory as the party served. The party serving the interrogatory shall be afforded reasonable opportunity to examine, audit or inspect such records and to make copies, compilations, abstracts or summaries. The specification shall include sufficient detail to permit the interrogating party to locate and identify the individual records from which the answer may be ascertained.

(d) Objections to the form of written interrogatories are waived unless served in writing upon the party propounding the interrogatories.

§ 180.515 Depositions.

(a) *Notice.* Upon written notice to the witness and to all other parties, a party may take the testimony of a witness by deposition and may request the production of specified documents or materials by the witness at the deposition. Notice of the taking of a deposition shall be given not less than five days before the deposition is scheduled. The notice shall state:

(1) The purpose and general scope of the deposition;

(2) The time and place of the deposition;

(3) The name and address of the person before whom the deposition is to be taken;

(4) The name and address of the witness; and

(5) A specification of the documents and materials that the witness is requested to produce.

(b) *Deposition of an organization.* If the deposition of a public or private corporation, partnership, association, or governmental agency is sought, the organization so named shall designate one or more officers, directors or agents to testify on its behalf, and may set forth, for each person designated, the matters on which he/she will testify.

(c) *Procedure at deposition.* Depositions may be taken before any disinterested person having power to administer oaths in the location where the deposition is to be taken. Each deponent shall be placed under oath or affirmation, and the other parties will have the right to cross-examine. The deponent may have counsel present during the deposition. The questions propounded and all answers and objections thereto shall be reduced to writing, read by or to and subscribed by the witness, and certified by the person before whom the deposition was taken. Non-intervening aggrieved persons may be present at depositions in which they are not the deponent.

(d) *Motion to terminate or limit examination.* During the taking of a deposition, a party or the witness may request suspension of the deposition on the grounds of bad faith in the conduct of the examination, oppression of the witness or party, or improper questioning or conduct. Upon request for suspension, the deposition will be adjourned. The objecting party or witness must immediately move the ALJ for a ruling on the objection. The ALJ may then limit the scope or manner of taking the deposition.

(e) *Waiver of deposing officer's disqualification.* Objection to taking a deposition because of the disqualification of the officer before whom it is taken is waived unless made before the taking of the deposition begins or as soon thereafter as the disqualification becomes known or could have been discovered with reasonable diligence.

(f) *Payment of costs of deposition.* The party requesting the deposition shall bear all costs of the deposition.

§ 180.520 Use of deposition at hearings.

(a) *In general.* At the hearing, any part or all of a deposition, so far as admissible under the Federal Rules of Evidence, may be used against any party who was present or represented at the taking of the deposition or who had due notice of the taking of the deposition, in accordance with the following provisions:

(1) Any deposition may be used by any party for the purpose of contradicting or impeaching the testimony of the deponent as a witness.

(2) The deposition of an expert witness may be used by any party for any purpose, unless the ALJ rules that such use is unfair or in violation of due process.

(3) The deposition of a party, or of anyone who at the time of the taking of the deposition was an officer, director, or duly authorized agent of a public or private corporation, partnership, or association that is a party, may be used by any other party for any purpose.

(4) The deposition of a witness, whether or not a party, may be used by any party for any purpose if the ALJ finds:

(i) That the witness is dead;

(ii) That the witness is out of the United States or more than 100 miles from the place of hearing, unless it appears that the absence of the witness was procured by the party offering the deposition;

(iii) That the witness is unable to attend to testify because of age, sickness, infirmity, or imprisonment;

(iv) That the party offering the deposition has been unable to procure the attendance of the witness by subpoena; or

(v) Whenever exceptional circumstances exist as to make it desirable, in the interest of justice and with due regard to the importance of presenting the testimony of witnesses orally in open hearing, to allow the deposition to be used.

(5) If a part of a deposition is offered in evidence by a party, any other party may require the party to introduce all of the deposition that is relevant to the part introduced. Any party may introduce any other part of the deposition.

(6) Substitution of parties does not affect the right to use depositions previously taken. If a proceeding has been dismissed and another proceeding involving the same subject matter is later brought between the same parties or their representatives or successors in interest, all depositions lawfully taken in the former proceeding may be used in the latter proceeding.

(b) *Objections to admissibility.* Except as provided in this paragraph, objection may be made at the hearing to receiving in evidence any deposition or part of a deposition for any reason that would require the exclusion of the evidence if the witness were present and testifying.

(1) Objections to the competency of a witness or to the competency, relevancy, or materiality of testimony are not waived by failure to make them before or during the taking of the deposition, unless the basis of the objection is one which might have been obviated or removed if presented at that time.

(2) Errors and irregularities occurring at the oral examination in the manner of taking the deposition, in the form of the questions or answers, in the oath or affirmation, or in the conduct of parties, and errors of any kind which might be obviated, removed or cured if promptly presented, are waived unless reasonable objection is made at the taking of the deposition.

§ 180.525 Requests for production of documents or things for inspection or other purposes, including physical and mental examinations.

(a) Any party may serve on any other party a request to:

(1) Produce and/or permit the party, or a person acting on the party's behalf, to inspect and copy any designated documents, or to inspect and copy, test, or sample any tangible things that contain or may lead to relevant information and that are in the possession, custody, or control of the party upon whom the request is served.

(2) Permit entry upon designated land or other property in the possession or control of the party upon whom the request is served for the purpose of inspection and measuring, photographing, testing, or other purposes stated in paragraph (a)(1) of this section.

(b) Each request shall set forth with reasonable particularity the items or categories to be inspected and shall specify a reasonable time, place and manner for making the inspection and performing the related acts.

(c) Within 15 days after service of the request, the party upon whom the request is served shall serve a written response on the party submitting the request. The response shall state, with regard to each item or category, that inspection and related activities will be permitted as requested, unless there are objections, in which case the reasons for the objection shall be stated.

(d) Upon motion of any party, when the mental or physical condition (including the blood group) of a party or of a person in the custody or under the legal control of a party, is in controversy, the presiding ALJ may order the party to submit to a physical or mental examination by a suitably licensed or certified examiner or to produce for examination the person in the party's custody or legal control. The order may be made only on motion for good cause shown and upon notice to the person to be examined and to all parties and shall specify the time, place, manner, conditions, and scope of the examination and the person or persons by whom it is to be made. A report of the examiner shall be made in accordance with Rule 35(b) of the Federal Rules of Civil Procedure.

§ 180.530 Requests for admissions.

(a) Any party may serve on any other party a written request for the admission of the truth of any matters relevant to the adjudication set forth in the request that relate to statements or opinions of fact or of application of law to fact, including the genuineness and authenticity of any documents described in or attached to the request.

(b) Each matter for which an admission is requested is admitted unless, within 15 days after service of the request, or within such time as the ALJ allows, the party to whom the request is directed serves on the requesting party a sworn written answer which:

(1) Specifically denies, in whole or in part, the matter for which an admission is requested;

(2) Sets forth in detail why the party cannot truthfully admit or deny the matter; or

(3) States an objection that the matter is privileged, irrelevant or otherwise improper in whole or in part.

(c) An answering party may not give lack of information or knowledge as a reason for failure to admit or deny, unless he/she/it states that he/she/it has made a reasonable inquiry and that the information known to, or readily obtainable by, him/her/it is insufficient to enable the party to admit or deny.

(d) The party requesting admissions may move for a determination of the sufficiency of the answers or objections. Unless the ALJ determines that an objection is justified, the ALJ shall order that an answer be served. If the ALJ determines that an answer does not comply with the requirements of this section, the ALJ may order either that the matter is admitted or that an amended answer be served.

(e) Any matter admitted under this section is conclusively established unless, upon the motion of a party, the ALJ permits the withdrawal or amendment of the admission. Any admission made under this section is made for the purposes of the pending proceeding only, is not an admission by the party for any other purpose, and may not be used against the party in any other proceeding.

§ 180.535 Protective orders.

(a) Upon motion of a party or a person from whom discovery is sought or in accordance with § 180.540(c), and for good cause shown, the ALJ may make appropriate orders to protect a party or person from annoyance, embarrassment, oppression, or undue burden or expense as a result of the requested discovery request. The order may direct that:

(1) The discovery may not be had;

(2) The discovery may be had only on specified terms and conditions, including at a designated time and place;

(3) The discovery may be had by a method of discovery other than that selected by the party seeking discovery;

(4) Certain matters may not be the subject of discovery, or the scope of discovery may be limited to certain matters;

(5) Discovery may be conducted with no one present other than persons designated by the ALJ;

(6) A trade secret or other confidential research, development or commercial information may not be disclosed, or

may be disclosed only in a designated way; or

(7) The party or other person from whom discovery is sought may file specified documents or information under seal to be opened as directed by the ALJ.

(b) The ALJ may permit a party or other person from whom discovery is sought, who is seeking a protective order, to make all or part of the showing of good cause in camera. If such a showing is made, upon motion of the party or other person from whom discovery is sought, an in camera record of the proceedings may be made. If the ALJ enters a protective order, any in camera record of such showing shall be sealed and preserved and made available to the ALJ or, in the event of appeal, to the Secretary or a court.

§ 180.540 Motion to compel discovery.

(a) If a deponent fails to answer a question propounded, or a party upon whom a discovery request has been made fails to respond adequately, objects to a request, or fails to produce documents or other inspection as requested, the discovering party may move the ALJ for an order compelling discovery in accordance with the request. The motion shall:

(1) State the nature of the request;

(2) Set forth the response or objection of the deponent or party upon whom the request was served;

(3) Present arguments supporting the motion; and

(4) Attach copies of all relevant discovery requests and responses.

(b) For the purposes of this section, an evasive or incomplete answer or response will be treated as a failure to answer or respond.

(c) In ruling on a motion under this section, the ALJ may enter an order compelling a response in accordance with the request, may issue sanctions under paragraph (d) of this section, or may enter a protective order under § 180.535.

(d) *Sanctions.* If a party fails to provide or permit discovery, the ALJ may take such action as is just, including but not limited to the following:

(1) Inferring that the admission, testimony, document, or other evidence would have been adverse to the party;

(2) Ordering that, for purposes of the adjudication, the matters regarding which the order was made or any other designated facts shall be taken to be established in accordance with the claim of the party obtaining the order;

(3) Prohibiting the party failing to comply with the order from introducing evidence concerning, or otherwise relying upon, documents or other evidence withheld;

(4) Ordering that the party withholding discovery not introduce into evidence, or otherwise use in the hearing, information obtained in discovery;

(5) Permitting the requesting party to introduce secondary evidence concerning the information sought;

(6) Striking any appropriate part of the pleadings or other submissions of the party failing to comply with such order; or

(7) Taking such other action as may be appropriate.

§ 180.545 Subpoenas.

(a) This section governs the issuance of subpoenas in administrative proceedings under the Fair Housing Act. Except for time periods stated in the rules in this section, to the extent that this section conflicts with procedures for the issuance of subpoenas in civil actions in the United States District Court for the District in which the investigation of the discriminatory housing practice took place, the rules of the United States District Court apply.

(b) *Issuance of subpoena.* Upon the written request of a party, the Chief ALJ or the presiding ALJ may issue a subpoena requiring the attendance of a witness for the purpose of giving testimony at a deposition or hearing and requiring the production of relevant books, papers, documents or tangible things.

(c) *Time of request.* Requests for subpoenas in aid of discovery must be submitted in time to permit the conclusion of discovery 15 days before the date scheduled for the hearing. If a request for subpoenas of a witness for testimony at a hearing is submitted three days or less before the hearing, the subpoena shall be issued at the discretion of the Chief ALJ or the presiding ALJ, as appropriate.

(d) *Service.* A subpoena may be served by any person who is not a party and is not less than 18 years of age. Service on a person shall be made by delivering a copy of the subpoena to the person and by tendering witness fees and mileage to that person. When the subpoena is issued on behalf of HUD, witness fees and mileage need not be tendered with the subpoena.

(e) *Amount of witness fees and mileage.* A witness summoned by a subpoena issued under this part is entitled to the same witness and mileage fees as a witness in proceedings in United States District Courts. Fees payable to a witness summoned by a subpoena shall be paid by the party requesting the issuance of the subpoena, or where the ALJ determines that a party is unable to pay the fees, the fees shall be paid by HUD.

(f) *Motion to quash or limit subpoena.* Upon a motion by the person served with a subpoena or by a party, made within five days after service of the subpoena (but in any event not less than the time specified in the subpoena for compliance), the ALJ may:

(1) Quash or modify the subpoena if it is unreasonable and oppressive or for other good cause shown; or

(2) Condition denial of the motion upon the advancement, by the party on whose behalf the subpoena was issued, of the reasonable cost of producing subpoenaed books, papers or documents. Where circumstances require, the ALJ may act upon such a motion at any time after a copy of the motion has been served upon the party on whose behalf the subpoena was issued.

(g) *Failure to comply with subpoena.* If a person fails to comply with a subpoena issued under this section, the party requesting the subpoena may refer the matter to the Attorney General for enforcement in appropriate proceedings under 42 U.S.C. 3614(c).

Subpart F—Procedures at Hearing

§ 180.600 Date and place of hearing.

(a) *For Fair Housing Act Cases.* (1) *Time.* The hearing shall commence not later than 120 days after the issuance of the charge, unless it is impracticable to do so. If the hearing cannot be commenced within this time period, the ALJ shall notify in writing all parties, aggrieved persons, amici, and the Assistant Secretary of the reasons for the delay.

(2) *Place.* The hearing will be conducted at a place in the vicinity in which the discriminatory housing practice is alleged to have occurred or to be about to occur.

(b) *For Non-Fair Housing Matters.* Hearings shall be held in Washington, DC, unless the ALJ determines that the convenience of the respondent or HUD requires that another place be selected.

(c) The ALJ may change the time, date or place of the hearing, or may temporarily adjourn or continue a hearing for good cause shown.

§ 180.605 Conduct of hearings.

The hearing shall be conducted in accordance with the Administrative Procedure Act (5 U.S.C. 551–559).

§ 180.610 Waiver of right to appear.

If all parties waive their right to appear before the ALJ, the ALJ need not conduct an oral hearing. Such waivers

shall be in writing and filed with the ALJ. The ALJ shall make a record of the pleadings and relevant written evidence submitted by the parties. These documents may constitute the evidence in the proceeding, and the decision may be based upon this evidence.

§ 180.615 Failure of party to appear.

A default decision may be entered against a party failing to appear at a hearing unless such party shows good cause for such failure.

§ 180.620 Evidence.

The Federal Rules of Evidence apply to the presentation of evidence in hearings under this part.

§ 180.625 Record of hearing.

(a) All oral hearings shall be recorded and transcribed by a reporter designated and supervised by the ALJ. The original transcript shall be a part of the record and shall constitute the sole official transcript. All exhibits introduced as evidence shall be incorporated into the record. The parties and the public may obtain transcripts from the official reporter at rates not to exceed the applicable rates fixed by the contract with the reporter.

(b) Corrections to the official transcript will be permitted upon motion of a party. Motions for correction must be submitted within five days after receipt of the transcript. Corrections of the official transcript will be permitted only where errors of substance are involved and upon the ALJ's approval.

§ 180.630 Stipulations.

The parties may stipulate to any pertinent facts by oral agreement at the hearing or by written agreement at any time. Stipulations may be submitted into evidence at any time before the end of the hearing. Once received into evidence, a stipulation is binding on the parties.

§ 180.635 Written testimony.

The ALJ may accept and enter into the record direct testimony of witnesses made by verified written statement rather than by oral presentation at the hearing. Unless the ALJ fixes other time periods, affidavits shall be filed and served on the parties not later than 14 days prior to the hearing. Witnesses whose testimony is presented by affidavit shall be available for cross-examination as may be required.

§ 180.640 In camera and protective orders.

The ALJ may limit discovery or the introduction of evidence, or may issue such protective or other orders necessary to protect privileged communications. If the ALJ determines that information in documents containing privileged matters should be made available to a party, the ALJ may order the preparation of a summary or extract of the nonprivileged matter contained in the original.

§ 180.645 Exhibits.

(a) *Identification.* All exhibits offered into evidence shall be numbered sequentially and marked with a designation identifying the sponsor. The original of each exhibit offered in evidence or marked for identification shall be filed and retained in the docket of the proceeding, unless the ALJ permits the substitution of a copy for the original.

(b) *Exchange of exhibits.* One copy of each exhibit offered into evidence must be furnished to each of the parties and to the ALJ. If the ALJ does not fix a time for the exchange of exhibits, the parties shall exchange copies of proposed exhibits at the earliest practicable time before the commencement of the hearing. Exhibits submitted as rebuttal evidence are not required to be exchanged before the commencement of the hearing if the submission of such evidence could not reasonably be anticipated at that time.

(c) *Authenticity.* The authenticity of all documents submitted or exchanged as proposed exhibits prior to the hearing shall be admitted unless written objection is filed before the commencement of the hearing, or unless good cause is shown for failing to file such a written objection.

(d) The parties are encouraged to stipulate as to the admissibility of exhibits.

§ 180.650 Public document items.

Whenever a public document, such as an official report, decision, opinion, or published scientific or economic statistical data issued by any of the executive departments (or their subdivisions), legislative agencies or committees, or administrative agencies of the Federal Government (including Government-owned corporations), or a similar document issued by a State or its agencies is offered (in whole or in part), and such document (or part thereof) has been shown by the offeror to be reasonably available to the public, such document need not be produced or marked for identification, but may be offered for official notice, as a public document item by specifying the document or relevant part thereof.

§ 180.655 Witnesses.

(a) Witnesses shall testify under oath or affirmation.

(b) If a witness fails or refuses to testify, the failure or refusal to answer any question found by the ALJ to be proper may be grounds for striking all or part of the testimony that may have been given by the witness, or for any other action deemed appropriate by the ALJ.

§ 180.660 Closing of record.

(a) *Oral hearings.* Where there is an oral hearing, the hearing ends on the day of the adjournment of the oral hearing or, where written briefs are permitted, on the date that the written briefs are due.

(b) *Hearing on written record.* Where the parties have waived an oral hearing, the hearing ends on the date set by the ALJ as the final date for the receipt of submissions by the parties.

(c) *Receipt of evidence following hearing.* Following the end of the hearing, no additional evidence may be accepted into the record, except with the permission of the ALJ. The ALJ may receive additional evidence upon a determination that new and material evidence was not readily available before the end of the hearing, the evidence has been timely submitted, and its acceptance will not unduly prejudice the rights of the parties.

§ 180.665 Arguments and briefs.

(a) Following the submission of evidence at an oral hearing, the parties may file a brief, proposed findings of fact and conclusions of law, or both, or, in the ALJ's discretion, make oral arguments.

(b) Unless otherwise ordered by the ALJ, briefs and proposed findings of fact and conclusions of law shall be filed simultaneously by all parties. In Fair Housing Act cases, such filings shall be due not later than 45 days after the adjournment of the oral hearing. In other cases, they shall be due as the ALJ orders.

§ 180.670 Initial decision of ALJ.

(a) The ALJ shall issue an initial decision including findings of fact and conclusions of law upon each material issue of fact or law presented on the record. The initial decision of the ALJ shall be based on the whole record of the proceeding. A copy of the initial decision shall be served upon all parties, aggrieved persons, the Assistant Secretary, the Secretary, and amici, if any.

(b) *Initial decision in Fair Housing Act cases.* (1) The ALJ shall issue an initial decision within 60 days after the end of the hearing, unless it is impracticable to do so. If the ALJ is unable to issue the initial decision

within this time period (or within any succeeding 60-day period following the initial 60-day period), the ALJ shall notify in writing all parties, the aggrieved person on whose behalf the charge was filed, and the Assistant Secretary, of the reasons for the delay.

(2) The initial decision shall state that it will become the final agency decision 30 days after the date of issuance of the initial decision.

(3) *Findings against respondents.* If the ALJ finds that a respondent has engaged, or is about to engage, in a discriminatory housing practice, the ALJ shall issue an initial decision against the respondent and order such relief as may be appropriate. Relief may include, but is not limited to:

(i) Ordering the respondent to pay damages to the aggrieved person (including damages caused by humiliation and embarrassment).

(ii) Ordering injunctive or such other equitable relief as may be appropriate. No such order may affect any contract, sale, encumbrance or lease consummated before the issuance of the initial decision that involved a bona fide purchaser, encumbrancer or tenant without actual knowledge of the charge.

(iii) Assessing a civil penalty against the respondent to vindicate the public interest.

(A) The amount of the civil penalty may not exceed:

(*1*) $11,000, if the respondent has not been adjudged to have committed any prior discriminatory housing practice in any administrative hearing or civil action permitted under the Fair Housing Act or any State or local fair housing law, or in any licensing or regulatory proceeding conducted by a Federal, State or local governmental agency.

(*2*) $27,500, if the respondent has been adjudged to have committed one other discriminatory housing practice in any administrative hearing or civil action permitted under the Fair Housing Act, or any State or local fair housing law, or in any licensing or regulatory proceeding conducted by a Federal, State, or local government agency, and the adjudication was made during the five-year period preceding the date of filing of the charge.

(*3*) $55,000, if the respondent has been adjudged to have committed two or more discriminatory housing practices in any administrative hearings or civil actions permitted under the Fair Housing Act or any State or local fair housing law, or in any licensing or regulatory proceeding conducted by a Federal, State, or local government agency, and the adjudications were made during the seven-year period preceding the date of the filing of the charge.

(B) If the acts constituting the discriminatory housing practice that is the subject of the charge were committed by the same natural person who has previously been adjudged, in any administrative proceeding or civil action, to have committed acts constituting a discriminatory housing practice, the time periods set forth in paragraphs (b)(3)(iii)(A)(*2*) and (*3*) of this section do not apply.

(C) In a proceeding involving two or more respondents, the ALJ may assess a civil penalty as provided under paragraph (b) of this section against each respondent that the ALJ determines has been engaged or is about to engage in a discriminatory housing practice.

(4) *Findings in favor of respondents.* If the ALJ finds that the charging party has not established that a respondent has engaged in a discriminatory housing practice, the ALJ shall make an initial decision dismissing the charge as against that respondent.

(c) *Initial Decision in Non-Fair Housing Act matters.* The ALJ shall issue the initial decision as soon as possible after the end of the hearing.

(1) *Findings against Respondents.* If the ALJ finds that a respondent has failed to comply substantially with the statutory and regulatory requirements that gave rise to the notice of proposed adverse action, the ALJ shall issue an initial decision against the respondent.

(i) The initial decision shall provide for suspension or termination of, or refusal to grant or continue, Federal financial assistance, in whole or in part, to the involved program or activity.

(ii) The initial decision may contain such terms, conditions, and other provisions as are consistent with and will effectuate the purposes of the applicable statute and regulations, including provisions designed to assure that no Federal financial assistance will be extended for the program or activity unless and until the respondent corrects its noncompliance and satisfies the Secretary that it will fully comply with the relevant statute and regulations.

(iii) The initial decision shall state that it will become final only upon the Secretary's approval.

(2) *Findings in favor of respondents.* If the ALJ finds that a respondent has not failed to comply substantially with the statutory and regulatory requirements that gave rise to the notice of proposed adverse action, the ALJ shall make an initial decision dismissing the notice of proposed adverse action. The initial decision shall state that it will become the final agency decision 30 days after the date of issuance.

§ 180.675 Petitions for review.

(a) The Secretary may affirm, modify or set aside, in whole or in part, the initial decision, or remand the initial decision for further proceedings.

(b) Any party adversely affected by the ALJ's initial decision may file a motion with the Secretary explaining how and why the initial decision should be modified, set aside, in whole or in part, or remanded for further proceedings. Such petition shall be based only on the following grounds:

(1) A finding of material fact is not supported by substantial evidence;

(2) A necessary legal conclusion is erroneous;

(3) The decision is contrary to law, duly promulgated rules of HUD, or legal precedent; or

(4) A prejudicial error of procedure was committed.

(c) Each issue shall be plainly and concisely stated and shall be supported by citations to the record when assignments of error are based on the record, statutes, regulations, cases, or other authorities relied upon. Except for good cause shown, no assignment of error by any party shall rely on any question of fact or law not presented to the ALJ.

(d) Such petitions must be received by the Secretary within 15 days after issuance of the initial decision.

(e) A statement in opposition to the petition for review may be filed. Such opposition must be received by the Secretary within 22 days after issuance of the initial decision.

(f) A petition not granted within 30 days after the issuance of the initial decision is deemed denied.

(g) If the Secretary remands the decision for further proceedings, the ALJ shall issue an initial decision on remand within 60 days after the date of issuance of the Secretary's decision, unless it is impracticable to do so. If the ALJ is unable to issue the initial decision within this time period (or within any succeeding 60-day period following the initial 60-day period), the ALJ shall notify in writing the parties, the aggrieved person on whose behalf the charge was filed, any amicus curiae and the Assistant Secretary, of the reasons for the delay.

§ 180.680 Final decisions.

(a) *Public disclosure.* HUD shall make public disclosure of each final decision.

(b) *Where initial decision does not provide for suspension or termination of, or refusal to grant or continue, Federal financial assistance.*

(1) *Issuance of final decision by Secretary.* The Secretary may review any finding of fact, conclusion of law, or order contained in the initial decision of the ALJ and issue a final decision in the proceeding. The Secretary shall serve the final decision on all parties no later than 30 days after the date of issuance of the initial decision.

(2) *No final decision by Secretary.* If the Secretary does not serve a final decision within the time period described in paragraph (b)(1) of this section, the initial decision of the ALJ will become the final agency decision. For the purposes of this part, such a final decision will be considered to have been issued 30 days after the date of issuance of the initial decision.

(c) *Where initial decision provides for suspension or termination of, or refusal to grant or continue, Federal financial assistance.* When the initial decision provides for the suspension or termination of, or the refusal to grant or continue, Federal financial assistance, or the imposition of any other sanction, such decision shall not constitute an order or final agency action until approved by the Secretary. Further, in the case of proceedings under title VI of the Civil Rights Act of 1964, no order suspending, terminating, or refusing to grant or continue Federal financial assistance shall become effective until the requirements of 24 CFR 1.8(c) have been met.

Subpart G—Post-Final Decision in Fair Housing Cases

§ 180.700 Action upon issuance of a final decision in Fair Housing Act cases.

(a) *Licensed or regulated businesses.* (1) If a final decision includes a finding that a respondent has engaged or is about to engage in a discriminatory housing practice in the course of a business that is subject to licensing or regulation by a Federal, State or local governmental agency, the Assistant Secretary will notify the governmental agency of the decision by:

(i) Sending copies of the findings of fact, conclusions of law and final decision to the governmental agency by certified mail; and

(ii) Recommending appropriate disciplinary action to the governmental agency, including, where appropriate, the suspension or revocation of the respondent's license.

(2) The Assistant Secretary will notify the appropriate governmental agencies within 30 days after the date of issuance of the final decision, unless a petition for judicial review of the final decision as described in § 180.710 of this part has been filed before the issuance of the notification of the agency. If such a petition has been filed, the Assistant Secretary will provide the notification to the governmental agency within 30 days after the date that the final decision is affirmed upon review. If a petition for judicial review is timely filed following the notification of the governmental agency, the Assistant Secretary will promptly notify the governmental agency of the petition and withdraw his or her recommendation.

(b) *Notification to the Attorney General.* If a final decision includes a finding that a respondent has engaged or is about to engage in a discriminatory housing practice and another final decision including such a finding was issued under this part within the five years preceding the date of issuance of the final decision, the General Counsel will notify the Attorney General of the decisions by sending a copy of each final decision.

§ 180.705 Attorney's fees and costs.

Following the issuance of the final decision, any prevailing party, except HUD, may apply for attorney's fees and costs. The ALJ will issue an initial decision awarding or denying such fees and costs. The initial decision will become HUD's final decision unless the Secretary reviews the initial decision and issues a final decision on fees and costs within 30 days. The recovery of reasonable attorney's fees and costs will be permitted as follows:

(a) If the respondent is the prevailing party, HUD will be liable for reasonable attorney's fees and costs to the extent provided under the Equal Access to Justice Act (5 U.S.C. 504) and HUD's regulations at 24 CFR part 14, and an intervenor will be liable for reasonable attorney's fees and costs only to the extent that the intervenor's participation in the administrative proceeding was frivolous or vexatious, or was for the purpose of harassment.

(b) To the extent that an intervenor is a prevailing party, the respondent will be liable for reasonable attorney's fees unless special circumstances make the recovery of such fees and costs unjust.

§ 180.710 Judicial review of final decision.

(a) Any party adversely affected by a final decision may file a petition in the appropriate United States Court of Appeals for review of the decision under 42 U.S.C. 3612(i). The petition must be filed within 30 days after the date of issuance of the final decision.

(b) If no petition for review is filed under paragraph (a) of this section within 45 days after the date of issuance of the final decision, the findings of facts and final decision shall be conclusive in connection with any petition for enforcement.

§ 180.715 Enforcement of final decision.

(a) *Enforcement by HUD.* Following the issuance of a final decision, the General Counsel may petition the appropriate United States Court of Appeals for the enforcement of the final decision and for appropriate temporary relief or restraining order in accordance with 42 U.S.C. 3612(j).

(b) *Enforcement by others.* If no petition for review has been filed within 60 days after the date of issuance, and the General Counsel has not sought enforcement of the final decision as described in paragraph (a) of this section, any person entitled to relief under the final decision may petition the appropriate United States Court of Appeals for the enforcement of the final decision in accordance with 42 U.S.C. 3612(m).

Subpart H—Post-Final Decision in Non-Fair Housing Act Matters

§ 180.800 Post-termination proceedings.

(a) A respondent adversely affected by the order terminating, discontinuing, or refusing Federal financial assistance in consequence of proceedings pursuant to this title may request the Secretary for an order authorizing payment, or permitting resumption, of Federal financial assistance. Such request shall:

(1) Be in writing;

(2) Affirmatively show that, since entry of the order, the respondent has brought its program or activity into compliance with statutory and regulatory requirements; and

(3) Set forth specifically, and in detail, the steps taken to achieve such compliance.

(b) If the Secretary denies such request, the respondent may request an expeditious hearing. The request for such a hearing shall be addressed to the Secretary within 30 days after the respondent is informed that the Secretary has refused to authorize payment or permit resumption of Federal financial assistance and shall specify why the Secretary erred in denying the request.

(c) The procedures established by this part shall be applicable to any hearing.

§ 180.805 Judicial review of final decision.

A termination of or refusal to grant or to continue Federal financial assistance is subject to judicial review as provided in the applicable statute.

Dated: September 24, 1996.

Henry G. Cisneros,

Secretary.

[FR Doc. 96–25301 Filed 10–3–96; 8:45 am]

BILLING CODE 4210–32–P

federal register

Friday
October 4, 1996

Part VII

Department of Defense

General Services Administration

National Aeronautics and Space Administration

48 CFR Part 1, et al.

Federal Acquisition Regulation: Certification Requirements Public Meeting; Proposed Rule

DEPARTMENT OF DEFENSE

GENERAL SERVICES ADMINISTRATION

NATIONAL AERONAUTICS AND SPACE ADMINISTRATION

48 CFR Parts 1, 3, 4, 6, 8, 9, 12, 14, 16, 19, 22, 23, 25, 27, 29, 31, 32, 36, 37, 42, 45, 47, 49, 52 and 53

[FAR case 96–312]

RIN 9000–AH23

Federal Acquisition Regulation; Certification Requirements Public Meeting

AGENCIES: Department of Defense (DOD), General Services Administration (GSA), and National Aeronautics and Space Administration (NASA).

ACTION: Notice of a change to a previously announced public meeting.

SUMMARY: An announcement of a public meeting to discuss Certification Requirements was published in a Federal Register notice dated September 19, 1996 (61 FR 49402). The meeting was scheduled to be conducted at the White House Conference Center on October 9, 1996. This notice announces a change of date for that meeting.

DATE AND TIME: The meeting will be held on October 29, 1996, from 1:30 p.m. to 4:30 p.m., eastern standard time. Formal statement must be submitted by October 22, 1996.

ADDRESSES: The location of the meeting will be: The White House Conference Center, Truman Room, 726 Jackson Place, NW, Washington, DC 20503.

Individuals who would like to participate or submit a formal statement shall notify: Defense Acquisition Regulations Council, Attn: Mr. Michael Mutty, PDUSD(A&T) DP(DAR), IMD 3D139, 3062 Defense Pentagon, Washington, DC 20301–3062.

FOR FURTHER INFORMATION CONTACT: Michael Mutty, telephone (703) 602–0131 Fax (703) 602–0350.

Edward C. Loeb,

Director, Federal Acquisition Policy Division.

[FR Doc. 96–25593 Filed 10–3–96; 8:45 am]

BILLING CODE 6820–EP–D

Reader Aids

Federal Register

Vol. 61, No. 194

Friday, October 4, 1996

CUSTOMER SERVICE AND INFORMATION

Federal Register/Code of Federal Regulations

General Information, indexes and other finding aids **202–523–5227**

Laws

Public Laws Update Services (numbers, dates, etc.) **523–6641**
For additional information **523–5227**

Presidential Documents

Executive orders and proclamations **523–5227**
The United States Government Manual **523–5227**

Other Services

Electronic and on-line services (voice) **523–4534**
Privacy Act Compilation **523–3187**
TDD for the hearing impaired **523–5229**

ELECTRONIC BULLETIN BOARD

Free Electronic Bulletin Board service for Public Law numbers, Federal Register finding aids, and list of documents on public inspection. **202–275–0920**

FAX-ON-DEMAND

You may access our Fax-On-Demand service. You only need a fax machine and there is no charge for the service except for long distance telephone charges the user may incur. The list of documents on public inspection and the daily Federal Register's table of contents are available using this service. The document numbers are 7050-Public Inspection list and 7051-Table of Contents list. The public inspection list will be updated immediately for documents filed on an emergency basis.

NOTE: YOU WILL ONLY GET A LISTING OF DOCUMENTS ON FILE AND NOT THE ACTUAL DOCUMENT. Documents on public inspection may be viewed and copied in our office located at 800 North Capitol Street, N.W., Suite 700. The Fax-On-Demand telephone number is: **301–713–6905**

FEDERAL REGISTER PAGES AND DATES, OCTOBER

51205–51348 1
51349–51574 2
51575–51766 3
51767–52232 4

CFR PARTS AFFECTED DURING OCTOBER

At the end of each month, the Office of the Federal Register publishes separately a List of CFR Sections Affected (LSA), which lists parts and sections affected by documents published since the revision date of each title.

3 CFR

Proclamations:
6922 51205
6923 51347
6924 51767
Executive Orders:
13019 51763

5 CFR

Ch. XIV 51207
550 51319

7 CFR

90 51349
91 51349
92 51349
93 51349
94 51349
95 51349
96 51349
97 51349
98 51349
301 52190
319 51208
502 51210
920 51575
929 51353
945 51354
993 51356
Proposed Rules:
201 51791
301 51376
361 51791
1214 ..... 51378, 51391
997 51811
998 51811
999 51811

8 CFR

Proposed Rules:
312 51250

9 CFR

94 51769
113 51769

10 CFR

Proposed Rules:
30 51835
32 51835
40 51835
50 51835
52 51835
60 51835
61 51835
70 51835
71 51835
72 51835
110 51835
150 51835

12 CFR

2 51777

14 CFR

39 ..... 51212, 51357
71 ..... 51360, 51361, 51362
91 51782
Proposed Rules:
Ch. I 51845
39 ..... 51250, 51255, 51618, 51619, 51621, 51624, 51845, 51847
71 51319
440 51395

15 CFR

Ch. VII 51395
902 51213
922 57577

16 CFR

24 51577

19 CFR

101 51363
Proposed Rules:
10 518490

21 CFR

50 51498
56 51498
73 51584
177 51364
178 51587
312 51498
314 51498
558 51588
601 51498
812 51498
814 51498
Proposed Rules:
330 51625

22 CFR

603 51593

24 CFR

1 52216
2 52216
8 52216
42 51756
91 51756
92 51756
103 52216
104 52216
146 52216
180 52216
252 51319
570 51756
576 51546
585 52186
3500 51782
Proposed Rules:
570 51556

26 CFR

Proposed Rules:
1 51256

29 CFR

270 51596

30 CFR

Proposed Rules:
913 51631

31 CFR

Proposed Rules:
356 51851

33 CFR

120 51597
128 51597

34 CFR

614 51783
617 51783
619 51783
641 51783

36 CFR

Proposed Rules:
61 51536
1190 51397
1191 51397

37 CFR

Proposed Rules:
1 518355

40 CFR

9 51365
52 ....51214, 51366, 51598, 51599, 51784
70 ....51368, 51370
86 51365
89 52088
90 52088
91 52088
180 51372
300 51373

Proposed Rules:
52 ....51257, 51397, 51631, 51638, 51651, 51659, 51877
261 51397
271 51397
281 51875
302 51397
372 ....51322, 51330

42 CFR

57 51787
412 51217
413 ....51217, 51611
489 51217

43 CFR

Proposed Rules:
2760 51666
3740 51667
3810 51667
3820 51667

44 CFR

62 51217
64 ....51226, 51228

45 CFR

46 51531
1386 51751

46 CFR

108 51789
110 51789
111 51789
112 51789
113 51789
161 51789
501 51230
502 51230
514 51230
583 51230

47 CFR

20 51233
24 51233
73 51789

Proposed Rules:
90 51877

48 CFR

501 51373
702 51234
706 51234
715 51234
716 51234
722 51234
726 51234
733 51234
737 51234
752 51234

Proposed Rules:
1 52232
3 52232
4 52232
6 52232
8 52232
9 52232
12 52232
14 52232
16 52232
19 52232
22 52232
23 52232
25 52232
27 52232
29 52232
31 52232
32 52232
36 52232
37 52232
42 52232
45 52232
47 52232
49 52232
52 52232
53 52232

49 CFR

106 51334
107 51334
171 ....51235, 51334
172 ....51236, 51238, 51334
173 ....51238, 51241, 51334, 51495
174 51334
175 51334
176 51334
177 51334
178 51334
179 51334
180 51334
593 51334

Proposed Rules:
571 51669

50 CFR

216 51213
679 ....51374, 51789

Proposed Rules:
17 51878
424 51398
660 51670

REMINDERS

The items in this list were editorially compiled as an aid to Federal Register users. Inclusion or exclusion from this list has no legal significance.

RULES GOING INTO EFFECT TODAY

AGRICULTURE DEPARTMENT

Agricultural Marketing Service

Kiwifruit grown in California; published 10-3-96

EDUCATION DEPARTMENT

Postsecondary education:

CFR parts removed; published 10-4-96

ENVIRONMENTAL PROTECTION AGENCY

Air quality implementation plans; √A√approval and promulgation; various States; air quality planning purposes; designation of areas:

Michigan; published 8-5-96

Hazardous waste program authorizations:

Illinois; published 8-5-96

FARM CREDIT ADMINISTRATION

National Flood Insurance Reform Act of 1994; implementation:

Loans in special flood hazard areas; published 8-29-96

FEDERAL COMMUNICATIONS COMMISSION

Radio services, special:

Low power radio and automated maritime telecommunications system operations in 216-217 MHz band; published 9-4-96

HEALTH AND HUMAN SERVICES DEPARTMENT

Public Health Service

Grants:

Nurse practitioner and nurse midwifery programs; published 10-4-96

HOUSING AND URBAN DEVELOPMENT DEPARTMENT

Real Estate Settlement Procedures Act:

Employer-employee exemption, withdrawn; computer loan origination services, and controlled business disclosure format

Effective date delay; published 10-4-96

PERSONNEL MANAGEMENT OFFICE

Senior Executive Service:

Executive, management, and supervisory development; published 9-4-96

TRANSPORTATION DEPARTMENT

Federal Aviation Administration

Airworthiness directives:

Boeing; published 8-30-96

Saab; published 8-30-96

UNITED STATES INFORMATION AGENCY

Exchange visitor program:

Program extension procedures, research programs design and conduct, etc.; published 6-10-96

COMMENTS DUE NEXT WEEK

AGRICULTURE DEPARTMENT

Agricultural Marketing Service

Fluid milk promotion order; comments due by 10-7-96; published 9-6-96

AGRICULTURE DEPARTMENT

Animal and Plant Health Inspection Service

Interstate transportation of animals and animal products (quarantine):

Horses affected with or exposed to contagious equine metritis (CEM); comments due by 10-10-96; published 9-10-96

Viruses, serums, toxins, etc.:

Veterinary biologics establishment licenses and biological product licenses and permits; comments due by 10-7-96; published 8-22-96

AGRICULTURE DEPARTMENT

Foreign Agricultural Service

Sugar import licensing:

Refined sugar re-export, sugar-containing products re-export, and polyhydric alcohol programs; participation requirements; comments due by 10-7-96; published 8-6-96

AGRICULTURE DEPARTMENT

Federal Crop Insurance Corporation

Crop insurance regulations:

Almonds; comments due by 10-8-96; published 8-9-96

Walnuts; comments due by 10-8-96; published 8-9-96

AGRICULTURE DEPARTMENT

Farm Service Agency

Program regulations:

Loan assessment, market placement, and seasoned direct loan borrowers graduation to loan guarantee program; comments due by 10-7-96; published 7-9-96

AGRICULTURE DEPARTMENT

Rural Business-Cooperative Service

Program regulations:

Loan assessment, market placement, and seasoned direct loan borrowers graduation to loan guarantee program; comments due by 10-7-96; published 7-9-96

AGRICULTURE DEPARTMENT

Rural Housing Service

Program regulations:

Loan assessment, market placement, and seasoned direct loan borrowers graduation to loan guarantee program; comments due by 10-7-96; published 7-9-96

AGRICULTURE DEPARTMENT

Rural Utilities Service

Program regulations:

Loan assessment, market placement, and seasoned direct loan borrowers graduation to loan guarantee program; comments due by 10-7-96; published 7-9-96

COMMERCE DEPARTMENT

National Oceanic and Atmospheric Administration

Fishery conservation and management:

Northeast multispecies; comments due by 10-7-96; published 9-9-96

Ocean salmon off coasts of Washington, Oregon, and California; comments due by 10-9-96; published 9-25-96

Summer flounder, scup, and black sea bass; comments due by 10-7-96; published 8-21-96

DEFENSE DEPARTMENT

Federal Acquisition Regulation (FAR):

Certified cost or pricing data requirement; exception; comments due by 10-7-96; published 8-7-96

Immigration and Nationality Act employment provisions; contractor compliance; comments due by 10-7-96; published 8-8-96

Information Technology Management Reform Act of 1996; implementation; comments due by 10-7-96; published 8-8-96

Two-phase design-build construction procedures; comments due by 10-7-96; published 8-7-96

ENERGY DEPARTMENT

Acquisition regulations:

Organizational conflicts of interest; comments due by 10-7-96; published 8-6-96

ENERGY DEPARTMENT

Federal Energy Regulatory Commission

National Gas Policy Act:

Interstate natural gas pipelines; secondary market transactions; comments due by 10-7-96; published 8-7-96

ENVIRONMENTAL PROTECTION AGENCY

Air quality implementation plans; approval and promulgation; various States:

Tennessee; comments due by 10-7-96; published 9-6-96

Air quality implementation plans; √A√approval and promulgation; various States; air quality planning purposes; designation of areas:

Wyoming; correction; comments due by 10-7-96; published 9-6-96

Reporting and recordkeeping requirements; comments due by 10-11-96; published 9-11-96

Superfund program:

National oil and hazardous substances contingency plan--

National priorities list update; comments due by 10-7-96; published 9-5-96

National priorities list update; comments due by 10-7-96; published 9-5-96

FEDERAL COMMUNICATIONS COMMISSION

Common carrier services:

Telecommunications Act of 1996; implementation--

Local exchange carriers; tariff streamlining

provisions; comments due by 10-9-96; published 9-24-96
Practice and procedure:
Justice Department request that 311 be reserved for use by communities for non-emergency police telephone calls; pleading cycle establishment; comments due by 10-10-96; published 9-17-96
Radio stations; table of assignments:
Louisiana; comments due by 10-7-96; published 8-28-96
Nevada et al.; comments due by 10-7-96; published 8-28-96

FEDERAL DEPOSIT INSURANCE CORPORATION
Economically depressed regions; determination; comments due by 10-7-96; published 8-6-96

FEDERAL RETIREMENT THRIFT INVESTMENT BOARD
Thrift savings plan:
Federal employees moved to nonappropriated fund instrumentalities of DOD and Coast Guard; comments due by 10-10-96; published 8-9-96

GENERAL SERVICES ADMINISTRATION
Federal Acquisition Regulation (FAR):
Certified cost or pricing data requirement; exception; comments due by 10-7-96; published 8-7-96
Immigration and Nationality Act employment provisions; contractor compliance; comments due by 10-7-96; published 8-8-96
Information Technology Management Reform Act of 1996; implementation; comments due by 10-7-96; published 8-8-96
Two-phase design-build construction procedures; comments due by 10-7-96; published 8-7-96
Federal property management:
Information and records management and use--
Records management program; FIRMR provisions relocation; comments due by 10-7-96; published 8-7-96
Telecommunications resources management and use--
Government telephone systems, etc.; FIRMR provisions relocation; comments due by 10-7-96; published 8-7-96

HEALTH AND HUMAN SERVICES DEPARTMENT
Food and Drug Administration
Federal regulatory review:
Food and cosmetic labeling; comments due by 10-10-96; published 8-27-96
Food standards; comments due by 10-10-96; published 9-12-96
Food for human consumption:
Infant formula; current good manufacturing practice, quality control procedures, etc.; comments due by 10-7-96; published 7-9-96
Medical devices:
Manufacturer and distributor certification and appointment of U.S. designated agents; adverse events reporting requirements; comments due by 10-7-96; published 7-23-96

HOUSING AND URBAN DEVELOPMENT DEPARTMENT
Fair housing:
Complaint processing; subpoena provision removed; comments due by 10-7-96; published 8-8-96

INTERIOR DEPARTMENT
Indian Affairs Bureau
Energy and minerals:
Osage Reservation lands, OK, leasing; mining, except oil and gas; comments due by 10-7-96; published 8-8-96

INTERIOR DEPARTMENT
Land Management Bureau
Alaska occupancy and use:
Homestead settlements; comments due by 10-10-96; published 9-10-96
Carey Act grants; comments due by 10-10-96; published 9-10-96
Land resource management:
Gifts and acquisition of lands or interests in lands by purchase or condemnation; comments due by 10-11-96; published 9-11-96
National Forest exchanges; comments due by 10-11-96; published 9-11-96
Recreation management:
Wild and scenic rivers; comments due by 10-10-96; published 9-10-96

INTERIOR DEPARTMENT
Fish and Wildlife Service
National wildlife refuge system:
Range animals; surplus disposition; comments due by 10-7-96; published 8-7-96

INTERIOR DEPARTMENT
National Park Service
Special regulations:
Badlands National Park, SD; commercial vehicle traffic; comments due by 10-7-96; published 8-7-96

INTERIOR DEPARTMENT
Surface Mining Reclamation and Enforcement Office
Permanent program and abandoned mine land reclamation plan submissions:
Colorado; comments due by 10-10-96; published 9-10-96

JUSTICE DEPARTMENT
Immigration and Naturalization Service
Immigration:
Aliens--
Lawfully present in United States; term definition; comments due by 10-7-96; published 9-6-96
Educational requirements for naturalization--
Exceptions due to physical or developmental disability or mental impairment; comments due by 10-11-96; published 10-1-96

NATIONAL AERONAUTICS AND SPACE ADMINISTRATION
Federal Acquisition Regulation (FAR):
Certified cost or pricing data requirement; exception; comments due by 10-7-96; published 8-7-96
Immigration and Nationality Act employment provisions; contractor compliance; comments due by 10-7-96; published 8-8-96
Information Technology Management Reform Act of 1996; implementation; comments due by 10-7-96; published 8-8-96
Two-phase design-build construction procedures; comments due by 10-7-96; published 8-7-96

PERSONNEL MANAGEMENT OFFICE
Prevailing rate systems; comments due by 10-10-96; published 9-10-96
Retirement:
Coverage elections by current and former nonappropriated fund employees; comments due by 10-8-96; published 8-9-96

SECURITIES AND EXCHANGE COMMISSION
Securities:
Short-form registration expansion to include companies with non-voting common equity; comments due by 10-10-96; published 9-10-96

TRANSPORTATION DEPARTMENT
Coast Guard
Ports and waterways safety:
Port access routes--
Cape Fear River and Beaufort Inlet, NC; comments due by 10-7-96; published 7-8-96

TRANSPORTATION DEPARTMENT
Federal Aviation Administration
Airworthiness directives:
de Havilland; comments due by 10-8-96; published 8-30-96
Airbus; comments due by 10-8-96; published 8-30-96
AlliedSignal Inc.; comments due by 10-11-96; published 8-12-96
Boeing; comments due by 10-7-96; published 8-29-96
British Aerospace; comments due by 10-7-96; published 8-27-96
Fokker; comments due by 10-7-96; published 8-27-96
Industrie Aeronautiche E Meccaniche; comments due by 10-7-96; published 8-12-96
McDonnell Douglas; comments due by 10-7-96; published 8-27-96
Class E airspace; comments due by 10-10-96; published 8-15-96
Jet routes; comments due by 10-7-96; published 8-26-96
Rulemaking petitions; summary and disposition; comments due by 10-11-96; published 8-12-96

TRANSPORTATION DEPARTMENT
Federal Highway Administration
Engineering and traffic operations:
Uniform Traffic Control Devices Manual--
Pedestrian, bicycle, and school warning signs;

comments due by 10-7-96; published 6-7-96

TRANSPORTATION DEPARTMENT

National Highway Traffic Safety Administration

Motor vehicle safety standards:

Lamps, reflective devices, and associated equipment--

Headlamp aimability; comments due by 10-8-96; published 7-10-96

TREASURY DEPARTMENT

Alcohol, Tobacco and Firearms Bureau

Alcohol, tobacco, and other excise taxes:

Alcoholic beverages, denatured alcohol, tobacco products, and cigarette papers and tubes; exportation; comments due by 10-8-96; published 8-9-96

TREASURY DEPARTMENT

Internal Revenue Service

Income taxes:

Stock disposition loss allocation; comments due by 10-7-96; published 7-8-96

VETERANS AFFAIRS DEPARTMENT

Medical benefits:

Informed consent for patient care; comments due by 10-7-96; published 8-7-96

LIST OF PUBLIC LAWS

This is a list of public bills from the 104th Congress which have become Federal laws. It may be used in conjunction with ''P L U S'' (Public Laws Update Service) on 202–523–6641. The text of laws is not published in the **Federal Register** but may be ordered in individual pamphlet form (referred to as ''slip laws'') from the Superintendent of Documents, U.S. Government Printing Office, Washington, DC 20402 (phone, 202–512–2470).

H.R. 3610/P.L. 104–208

Omnibus Consolidated Appropriations Act, 1997 (Sept. 30, 1996; 110 Stat. 3009)

H.R. 1772/P.L. 104–209

To authorize the Secretary of the Interior to acquire certain interests in the Waihee Marsh for inclusion in the Oahu National Wildlife Refuge Complex. (Oct. 1, 1996; 110 Stat. 3010)

H.R. 2428/P.L. 104–210

To encourage the donation of food and grocery products to nonprofit organizations for distribution to needy individuals by giving the Model Good Samaritan Food Donation Act the full force and effect of law. (Oct. 1, 1996; 110 Stat. 3011)

H.R. 2464/P.L. 104–211

To amend Public Law 103-93 to provide additional lands within the State of Utah for the Goshute Indian Reservation, and for other purposes. (Oct. 1, 1996; 110 Stat. 3013)

H.R. 2679/P.L. 104–212

To revise the boundary of the North Platte National Wildlife Refuge, to expand the Pettaquamscutt Cove National Wildlife Refuge, and for other purposes. (Oct. 1, 1996; 110 Stat. 3014)

H.R. 2982/P.L. 104–213

Carbon Hill National Fish Hatchery Conveyance Act (Oct. 1, 1996; 110 Stat. 3016)

H.R. 3120/P.L. 104–214

To amend title 18, United States Code, with respect to witness retaliation, witness tampering and jury tampering. (Oct. 1, 1996; 110 Stat. 3017)

H.R. 3287/P.L. 104–215

Crawford National Fish Hatchery Conveyance Act (Oct. 1, 1996; 110 Stat. 3018)

H.R. 3553/P.L. 104–216

Federal Trade Commission Reauthorization Act of 1996 (Oct. 1, 1996; 110 Stat. 3019)

H.R. 3676/P.L. 104–217

Carjacking Correction Act of 1996 (Oct. 1, 1996; 110 Stat. 3020)

H.J. Res. 191/P.L. 104–218

To confer honorary citizenship of the United States on Agnes Gonxha Bojaxhiu, also known as Mother Teresa. (Oct. 1, 1996; 110 Stat. 3021)

S. 533/P.L. 104–219

To clarify the rules governing removal of cases to Federal court, and for other purposes. (Oct. 1, 1996; 110 Stat. 3022)

S. 677/P.L. 104–220

To repeal a redundant venue provision, and for other purposes. (Oct. 1, 1996; 110 Stat. 3023)

S. 1636/P.L. 104–221

To designate the United States Courthouse under construction at 1030 Southwest 3rd Avenue, Portland, Oregon, as the ''Mark O. Hatfield United States Courthouse'', and for other purposes. (Oct. 1, 1996; 110 Stat. 3024)

S. 1995/P.L. 104–222

To authorize construction of the Smithsonian Institution National Air and Space Museum Dulles Center at Washington Dulles International Airport, and for other purposes. (Oct. 1, 1996; 110 Stat. 3025)

H.R. 2512/P.L. 104–223

Crow Creek Sioux Tribe Infrastructure Development Trust Fund Act of 1996 (Oct. 1, 1996; 110 Stat. 3026)

H.R. 2366/P.L. 104–224

To repeal an unnecessary medical device reporting requirement. (Oct. 2, 1996; 110 Stat. 3031)

H.R. 2504/P.L. 104–225

To designate the Federal building located at the corner of Patton Avenue and Otis Street, and the United States courthouse located on Otis Street, in Asheville, North Carolina, as the ''Veach-Baley Federal Complex''. (Oct. 2, 1996; 110 Stat. 3032)

H.R. 2685/P.L. 104–226

To repeal the Medicare and Medicaid Coverage Data Bank. (Oct. 2, 1996; 110 Stat. 3033)

H.R. 3060/P.L. 104–227

Antarctic Science, Tourism, and Conservation Act of 1996 (Oct. 2, 1996; 110 Stat. 3034)

H.R. 3186/P.L. 104–228

To designate the Federal building located at 1655 Woodson Road in Overland, Missouri, as the ''Sammy L. Davis Federal Building''. (Oct. 2, 1996; 110 Stat. 3045)

H.R. 3400/P.L. 104–229

To designate the Federal building and the United States courthouse to be constructed at a site on 18th Street between Dodge and Douglas Streets in Omaha, Nebraska, as the ''Roman L. Hruska Federal Building and United States Courthouse''. (Oct. 2, 1996; 110 Stat. 3046)

H.R. 3710/P.L. 104–230

To designate the United States courthouse under construction at 611 North Florida Avenue in Tampa, Florida, as the ''Sam M. Gibbons United States Courthouse''. (Oct. 2, 1996; 110 Stat. 3047)

H.R. 3802/P.L. 104–231

Electronic Freedom of Information Act Amendments of 1996 (Oct. 2, 1996; 110 Stat. 3048)

S. 1507/P.L. 104–232

Parole Commission Phaseout Act of 1996 (Oct. 2, 1996; 110 Stat. 3055)

S. 1834/P.L. 104–233

To reauthorize the Indian Environmental General Assistance Program Act of 1992, and for other purposes. (Oct. 2, 1996; 110 Stat. 3057)

Last List October 3, 1996