01–2–97
Vol. 62 No. 1
Pages 1–300

federal register

Thursday
January 2, 1997

Briefings on how to use the Federal Register
For information on briefings in Washington, DC, see announcement on the inside cover of this issue

Now Available Online

Code of Federal Regulations

via

GPO Access

(Selected Volumes)

Free, easy, online access to selected *Code of Federal Regulations (CFR)* volumes is now available via *GPO Access*, a service of the United States Government Printing Office (GPO). *CFR* titles will be added to *GPO Access* incrementally throughout calendar years 1996 and 1997 until a complete set is available. GPO is taking steps so that the online and printed versions of the *CFR* will be released concurrently.

The *CFR* and *Federal Register* on *GPO Access*, are the official online editions authorized by the Administrative Committee of the Federal Register.

New titles and/or volumes will be added to this online service as they become available.

http://www.access.gpo.gov/nara/cfr

For additional information on ***GPO Access*** products, services and access methods, see page II or contact the *GPO Access* User Support Team via:

★ Phone: toll-free: 1-888-293-6498
★ Email: gpoaccess@gpo.gov

FEDERAL REGISTER Published daily, Monday through Friday, (not published on Saturdays, Sundays, or on official holidays), by the Office of the Federal Register, National Archives and Records Administration, Washington, DC 20408, under the Federal Register Act (49 Stat. 500, as amended; 44 U.S.C. Ch. 15) and the regulations of the Administrative Committee of the Federal Register (1 CFR Ch. I). Distribution is made only by the Superintendent of Documents, U.S. Government Printing Office, Washington, DC 20402.

The Federal Register provides a uniform system for making available to the public regulations and legal notices issued by Federal agencies. These include Presidential proclamations and Executive Orders and Federal agency documents having general applicability and legal effect, documents required to be published by act of Congress and other Federal agency documents of public interest. Documents are on file for public inspection in the Office of the Federal Register the day before they are published, unless earlier filing is requested by the issuing agency.

The seal of the National Archives and Records Administration authenticates this issue of the Federal Register as the official serial publication established under the Federal Register Act. 44 U.S.C. 1507 provides that the contents of the Federal Register shall be judicially noticed.

The Federal Register is published in paper, 24x microfiche and as an online database through *GPO Access*, a service of the U.S. Government Printing Office. The online edition of the Federal Register on *GPO Access* is issued under the authority of the Administrative Committee of the Federal Register as the official legal equivalent of the paper and microfiche editions. The online database is updated by 6 a.m. each day the Federal Register is published. The database includes both text and graphics from Volume 59, Number 1 (January 2, 1994) forward. Free public access is available on a Wide Area Information Server (WAIS) through the Internet and via asynchronous dial-in. Internet users can access the database by using the World Wide Web; the Superintendent of Documents home page address is http://www.access.gpo.gov/su__docs/, by using local WAIS client software, or by telnet to swais.access.gpo.gov, then login as guest, (no password required). Dial-in users should use communications software and modem to call (202) 512–1661; type swais, then login as guest (no password required). For general information about *GPO Access*, contact the *GPO Access* User Support Team by sending Internet e-mail to gpoaccess@gpo.gov; by faxing to (202) 512–1262; or by calling toll free 1–888–293–6498 or (202) 512–1530 between 7 a.m. and 5 p.m. Eastern time, Monday–Friday, except for Federal holidays.

The annual subscription price for the Federal Register paper edition is $494, or $544 for a combined Federal Register, Federal Register Index and List of CFR Sections Affected (LSA) subscription; the microfiche edition of the Federal Register including the Federal Register Index and LSA is $433. Six month subscriptions are available for one-half the annual rate. The charge for individual copies in paper form is $8.00 for each issue, or $8.00 for each group of pages as actually bound; or $1.50 for each issue in microfiche form. All prices include regular domestic postage and handling. International customers please add 25% for foreign handling. Remit check or money order, made payable to the Superintendent of Documents, or charge to your GPO Deposit Account, VISA or MasterCard. Mail to: New Orders, Superintendent of Documents, P.O. Box 371954, Pittsburgh, PA 15250–7954.

There are no restrictions on the republication of material appearing in the Federal Register.

How To Cite This Publication: Use the volume number and the page number. Example: 60 FR 12345.

SUBSCRIPTIONS AND COPIES

PUBLIC	
Subscriptions:	
Paper or fiche	202–512–1800
Assistance with public subscriptions	512–1806
General online information	202–512–1530 1–888–293–6498
Single copies/back copies:	
Paper or fiche	512–1800
Assistance with public single copies	512–1803
FEDERAL AGENCIES	
Subscriptions:	
Paper or fiche	523–5243
Assistance with Federal agency subscriptions	523–5243

For other telephone numbers, see the Reader Aids section at the end of this issue.

NOW AVAILABLE ONLINE

The January 1997 Office of the Federal Register Document Drafting Handbook

Free, easy, online access to the newly revised January 1997 Office of the Federal Register Document Drafting Handbook (DDH) is now available at:

http://www.nara.gov/nara/fedreg/ddh/ddhout.html

This handbook helps Federal agencies to prepare documents for publication in the Federal Register.

For additional information on access, contact the Office of the Federal Register's Technical Support Staff.

Phone: 202–523–3447

E-mail: info@fedreg.nara.gov

FEDERAL REGISTER WORKSHOP

THE FEDERAL REGISTER: WHAT IT IS AND HOW TO USE IT

FOR: Any person who uses the Federal Register and Code of Federal Regulations.

WHO: Sponsored by the Office of the Federal Register.

WHAT: Free public briefings (approximately 3 hours) to present:

1. The regulatory process, with a focus on the Federal Registers system and the public's role in the development of regulations.
2. The relationship between the Federal Register and Cod of Federal Regulations.
3. The important elements of typical Federal Register documents.
4. An introduction to finding aids of the FR/CFR system.

WHY: To provide the public with access to information necessar4y to research Federal agency regulations which directly affect them. There will be no discussion of specific agency regulations.

WASHINGTON, DC

WHEN: January 28, 1997 at 9:00 am

WHERE: Office of the Federal Register
Conference Room
800 North Capitol Street, NW
Washington, DC
(3 blocks north of Union Station Metro)

RESERVATIONS: 202–523–4538

Printed on recycled paper containing 100% post consumer waste

Contents

Federal Register
Vol. 62, No. 1
Thursday, January 2, 1997

Agricultural Marketing Service
RULES
Milk marketing orders:
Pacific Northwest, 1–4
PROPOSED RULES
Oranges and grapefruit grown in Texas, 55–56

Agriculture Department
See Agricultural Marketing Service
See Farm Service Agency
See Federal Crop Insurance Corporation
See Forest Service
See Grain Inspection, Packers and Stockyards Administration
See Rural Business-Cooperative Service
See Rural Housing Service
See Rural Utilities Service

Antitrust Division
NOTICES
National cooperative research notifications:
CommerceNet Consortium, 106–107
Semiconductor Research Corp., 107

Architectural and Transportation Barriers Compliance Board
NOTICES
Meetings:
Access Board, 92–93

Children and Families Administration
NOTICES
Agency information collection activities:
Submission for OMB review; comment request, 100

Coast Guard
NOTICES
Meetings:
Houston/Galveston Navigation Safety Advisory Committee, 142

Commerce Department
See International Trade Administration
See National Institute of Standards and Technology
See National Oceanic and Atmospheric Administration

Copyright Office, Library of Congress
NOTICES
Copyright arbitration royalty panels; arbitrator names list, 113–114

Defense Department
RULES
Federal Acquisition Regulation (FAR):
Agency procurement protests, 270–271
Caribbean Basin and designated countries; lists, 267–268
Caribbean Basin countries; end products renewal of treatment as eligible, 268–269
Certification requirements, 233–255
Certified cost or pricing data requirements; exceptions, 257–261
Commercial items; special simplified procedures application, 262–266
Contractor personnel compensation, 269–270
Design-build two-phase construction procedures, 271–273
Freedom of Information Act; implementation, 256–257
Humanitarian or peacekeeping operations; simplified acquisition threshold, 256
Immigration and Nationality Act employment provisions; contractor compliance, 266–267
Indirect cost audits; limitation, 274–275
Miscellaneous amendments—
Introduction, 224–225
North American Free Trade Agreement Implementation Act; implementation, 261–262
Procurement integrity, 226–233
Small entity compliance guide, 275–276
Year 2000 procurement issues; awareness and compliance, 273–274

Energy Department
See Federal Energy Regulatory Commission

Environmental Protection Agency
PROPOSED RULES
Air pollution control; new motor vehicles and engines:
Heavy-duty engines—
Nonroad diesel engines, 200–208
Air programs:
Ambient air quality standards, national—
Sulfur oxide (sulfur dioxide), 210–222
NOTICES
Pesticide tolerance processing fees deposit fund, 99
Superfund; response and remedial actions, proposed settlements, etc.:
Monroe Township Landfill Site, NJ, 99–100

Executive Office of the President
See Presidential Documents

Farm Service Agency
NOTICES
Agency information collection activities:
Proposed collection; comment request, 88–89

Federal Aviation Administration
RULES
Airworthiness directives:
Boeing, 15–16
New Piper Aircraft, Inc., 10–15
PROPOSED RULES
Class E airspace, 70
NOTICES
Advisory circulars; availability, etc.:
Aircraft—
Small airplanes airworthiness standards, 142–143
Exemption petitions; summary and disposition, 143
Meetings:
RTCA, Inc., 143
Passenger facility charges; applications, etc.:
Manchester Airport, NH, 144
Spokane International Airport, WA, 144–145

Federal Communications Commission
PROPOSED RULES
Television stations; table of assignments:
Colorado, 84–85

Federal Crop Insurance Corporation
PROPOSED RULES
Crop insurance regulations:
Hybrid corn seed, 48–54
NOTICES
Standard reinsurance agreement; termination, 89

Federal Energy Regulatory Commission
NOTICES
Electric rate and corporate regulation filings:
Wisconsin Public Service Corp. et al., 96–98
Environmental statements; availability, etc.:
Northern Border Pipeline Co. et al., 98–99
Applications, hearings, determinations, etc.:
Gulf States Transmission Corp., 95
Idaho Power Co., 95
Midwest Energy, Inc., 95–96
Transwestern Pipeline Co., 96

Federal Housing Finance Board
RULES
Federal home loan bank system:
Employees selection and compensation and Finance Office Director selection; Federal regulatory reform, 4–10

Federal Railroad Administration
RULES
Railroad power brakes and drawbars:
Train and locomotive power braking systems; advanced technology use; two-way end-of-train telemetry devices, 278–296
NOTICES
Exemption petitions, etc.:
Northeast Illinois Railroad Corp., 145
South Kansas & Oklahoma Railroad, 145–146

Federal Reserve System
PROPOSED RULES
Consumer leasing (Regulation M):
Advertising disclosures for lease transactions; streamlining, 62–70
Equal credit opportunity (Regulation B):
Creditor compliance with Equal Credit Opportunity Act; legal privilege for information, 56–62

Financial Management Service
See Fiscal Service

Fiscal Service
RULES
Book-entry Treasury bonds, notes, and bills:
Revised Article 8 of Uniform Commercial Code; determination of substantially identical State statute; California, 26

Fish and Wildlife Service
NOTICES
Endangered and threatened species permit applications, 104

Food and Drug Administration
NOTICES
Food additive petitions:
Ciba Specialty Chemicals Corp., 100–101
O'Brien, Gerard T., 101
Human drugs:
Patent extension; regulatory review period determinations—
DIFFERIN Solution, 101–102
Meetings:
Fresh juices; current science, technology, and safety factors review, 102–103
Organization, functions, and authority delegations:
Center for Devices and Radiological Health, 103

Forest Service
NOTICES
Environmental statements; availability, etc.:
Cibola National Forest, NM, et al., 89–90
Meetings:
Oregon Coast Provincial Advisory Committee, 90–91

General Services Administration
RULES
Federal Acquisition Regulation (FAR):
Agency procurement protests, 270–271
Caribbean Basin and designated countries; lists, 267–268
Caribbean Basin countries; end products renewal of treatment as eligible, 268–269
Certification requirements, 233–255
Certified cost or pricing data requirements; exceptions, 257–261
Commercial items; special simplified procedures application, 262–266
Contractor personnel compensation, 269–270
Design-build two-phase construction procedures, 271–273
Freedom of Information Act; implementation, 256–257
Humanitarian or peacekeeping operations; simplified acquisition threshold, 256
Immigration and Nationality Act employment provisions; contractor compliance, 266–267
Indirect cost audits; limitation, 274–275
Miscellaneous amendments—
Introduction, 224–225
North American Free Trade Agreement Implementation Act; implementation, 261–262
Procurement integrity, 226–233
Small entity compliance guide, 275–276
Year 2000 procurement issues; awareness and compliance, 273–274

Grain Inspection, Packers and Stockyards Administration
NOTICES
Agency designation actions:
Illinois et al., 91
North Dakota et al., 91–92

Health and Human Services Department
See Children and Families Administration
See Food and Drug Administration
See Health Care Financing Administration
See Substance Abuse and Mental Health Services Administration

Health Care Financing Administration
RULES
Medicare:
Skilled nursing facilities and home health agencies; electronic cost reporting requirement, 26–31

Interior Department
See Fish and Wildlife Service
See Land Management Bureau
See National Park Service
See Reclamation Bureau
NOTICES
Central Utah Water Conservancy District:
Environmental statements; availability, etc.—
Upalco Replacement Project, 104

Internal Revenue Service
RULES
Employment taxes and collection of income taxes at source:
Form W-4; electronic filing, 22–25
Excise taxes:
Return and time for filing requirement, 25–26
Income taxes:
Controlled foreign corporations; foreign base company and foreign personal holding company income; definitions, 17–22
PROPOSED RULES
Excise taxes:
Return and time for filing requirement; cross reference, 84
Income taxes:
Insurance companies; determination of earned premiums; hearing, 72–76
Life insurance reserves; recomputation; hearing, 71–72
Research activities increase, credit; hearing, 81–83
Income taxes, etc.:
Taxpayer Bill of Rights 2 and Personal Responsibility and Work Opportunity Reconciliation Act of 1996; miscellaneous sections affected, 77–81

International Trade Administration
NOTICES
Antidumping:
Antifriction bearings (other than tapered roller bearings) and parts from—
France et al.; correction, 149

Justice Department
See Antitrust Division

Labor Department
NOTICES
Organization, functions, and authority delegations:
Assistant Secretary for Employment Standards et al., 107–111
Assistant Secretary for Occupational Safety and Health, 111–113

Land Management Bureau
NOTICES
Public land orders:
Oregon, 104–105
Resource management plans, etc.:
Garnet Resource Area, MT, 105

Legal Services Corporation
NOTICES
Meetings; Sunshine Act, 113

Library of Congress
See Copyright Office, Library of Congress

Morris K. Udall Scholarship & Excellence in National Environmental Policy Foundation
NOTICES
Meetings; Sunshine Act, 114

National Aeronautics and Space Administration
RULES
Federal Acquisition Regulation (FAR):
Agency procurement protests, 270–271
Caribbean Basin and designated countries; lists, 267–268
Caribbean Basin countries; end products renewal of treatment as eligible, 268–269
Certification requirements, 233–255
Certified cost or pricing data requirements; exceptions, 257–261
Commercial items; special simplified procedures application, 262–266
Contractor personnel compensation, 269–270
Design-build two-phase construction procedures, 271–273
Freedom of Information Act; implementation, 256–257
Humanitarian or peacekeeping operations; simplified acquisition threshold, 256
Immigration and Nationality Act employment provisions; contractor compliance, 266–267
Indirect cost audits; limitation, 274–275
Miscellaneous amendments—
Introduction, 224–225
North American Free Trade Agreement Implementation Act; implementation, 261–262
Procurement integrity, 226–233
Small entity compliance guide, 275–276
Year 2000 procurement issues; awareness and compliance, 273–274

National Highway Traffic Safety Administration
RULES
Motor vehicle safety standards:
Occupant crash protection—
Smart air bags, vehicles without; warning labels, manual cutoff switches, etc. reduction of dangerous impacts on children, 31–33

National Institute of Standards and Technology
NOTICES
Information processing standards, Federal:
Advanced encryption standard, 93–94

National Oceanic and Atmospheric Administration
RULES
Marine mammals:
Commercial fishing authorizations—
Fisheries categorized according to frequency of incidental takes; list, 33–47
PROPOSED RULES
Fishery conservation and management:
Alaska; fisheries of Exclusive Economic Zone—
Bering Sea and Aleutian Islands groundfish, 85–87
NOTICES
Grants and cooperative agreements; availability, etc.:
Gulf of Mexico sustainable fisheries program, 94–95

National Park Service
NOTICES
Meetings:
Gettysburg National Military Park Advisory Commission, 105–106

National Science Foundation
NOTICES
Meetings:
Advanced Scientific Computing Special Emphasis Panel, 114
Chemical and Transport Systems Special Emphasis Panel, 114–115
Civil and Mechanical Systems Special Emphaasis Panel, 115
Electrical and Communications Systems Special Emphasis Panel, 115
Information, Robotics and Intelligent Systems Special Emphasis Panel, 115–116
International Programs Special Emphasis Panel, 116
Materials Research Special Emphasis Panel, 116
Mathematical Sciences Special Emphasis Panel, 116–117
Polar Programs Special Emphasis Panel, 117

Nuclear Regulatory Commission
NOTICES
Agreement State radiation control programs:
Massachusetts; staff assessment, 117–121
Meetings; Sunshine Act, 121
Operating licenses, amendments; no significant hazards considerations; biweekly notices, 121–136

Presidential Documents
ADMINISTRATIVE ORDERS
Foreign Operations, Export Financing, and Related Programs Appropriations Act, 1997; determination pursuant to section 523 (Presidential Determination No. 97-11A of December 6, 1996), 299

Public Health Service
See Food and Drug Administration
See Substance Abuse and Mental Health Services Administration

Reclamation Bureau
NOTICES
Meetings:
Bay-Delta Advisory Council, 106

Rural Business-Cooperative Service
NOTICES
Agency information collection activities:
Proposed collection; comment request, 88–89

Rural Housing Service
NOTICES
Agency information collection activities:
Proposed collection; comment request, 88–89

Rural Utilities Service
NOTICES
Agency information collection activities:
Proposed collection; comment request, 88–89

Securities and Exchange Commission
NOTICES
Self-regulatory organizations; proposed rule changes:
Chicago Board Options Exchange, Inc., 136–137
Pacific Stock Exchange, Inc., 138–141

Sentencing Commission, United States
See United States Sentencing Commission

State Department
NOTICES
Meetings:
Shipping Coordinating Committee, 141

Substance Abuse and Mental Health Services Administration
NOTICES
Meetings:
SAMHSA Special Emphasis Panel I, 103–104

Transportation Department
See Coast Guard
See Federal Aviation Administration
See Federal Railroad Administration
See National Highway Traffic Safety Administration
RULES
Air travel; nondiscrimination on basis of disability:
Lifts and boarding facilitation devices, etc.
Correction, 16–17
NOTICES
Meetings:
White House Commission on Aviation Safety and Security, 141–142

Treasury Department
See Fiscal Service
See Internal Revenue Service

United States Information Agency
NOTICES
Grants and cooperative agreements; availability, etc.:
Community-based, professional programs for entrepreneurs, legal professionals, and government officials from Russia et al., 146–148

United States Sentencing Commission
NOTICES
Sentencing guidelines and policy statements for Federal courts, 152–198

Separate Parts In This Issue

Part II
Department of Justice, United States Sentencing Commission, 152–198

Part III
Environmental Protection Agency, 200–208

Part IV
Environmental Protection Agency, 210–222

Part V
Department of Defense, General Services Administration, National Aeronautics and Space Administration, 278–296

Part VI
Department of Transportation, Federal Railroad Administration, 278–296

Part VII
The President, 299

Reader Aids

Additional information, including a list of public laws, telephone numbers, reminders, and finding aids, appears in the Reader Aids section at the end of this issue.

Electronic Bulletin Board

Free Electronic Bulletin Board service for Public Law numbers, Federal Register finding aids, and a list of documents on public inspection is available on 202–275–1538 or 275–0920.

CFR PARTS AFFECTED IN THIS ISSUE

A cumulative list of the parts affected this month can be found in the Reader Aids section at the end of this issue.

3 CFR
Presidential Determinations:
No. 97–11A of December 6, 1996 299

7 CFR
1124.....1
Proposed Rules:
443.....48
457.....48
906.....55

12 CFR
932.....4
Proposed Rules:
202.....56
213.....62

14 CFR
39 (2 documents) 10, 15
382.....16
Proposed Rules:
71.....70

26 CFR
1.....17
31.....22
53.....25
602.....22
Proposed Rules:
1 (4 documents) 71, 72, 77, 81
53.....84
301.....77
602.....81

31 CFR
357.....26

40 CFR
Proposed Rules:
51.....210
89.....200

42 CFR
413.....26

47 CFR
Proposed Rules:
73.....84

48 CFR
Ch. 1 (2 documents) 224, 275
1 (3 documents) 226, 233, 271
2.....256
3 (2 documents) 226, 233
4 (3 documents) 226, 233, 257
5 (3 documents) 261, 262, 271
6 (3 documents) 233, 256, 262
8.....233
9 (3 documents) 226, 233, 266
11.....262
12 (4 documents) 226, 233, 257, 262
13.....262
14 (4 documents) 226, 233, 261, 271
15 (4 documents) 226, 256, 257, 261
16 (2 documents) 233, 257
17.....261
19 (2 documents) 226, 233
23.....233
24.....256
25 (4 documents) 257, 261, 267, 268
27 (2 documents) 233, 261
29.....233
31 (3 documents) 233, 257, 269
32.....233
33 (2 documents) 226, 270
36 (2 documents) 233, 271
37 (2 documents) 226, 233
39.....273
42 (2 documents) 233, 274
43.....226
45.....233
46.....257
47.....233
49.....233
52 (5 documents) 226, 233, 257, 261, 273
53 (2 documents) 226, 233

49 CFR
27.....16
232.....278
571.....31

50 CFR
229.....33
Proposed Rules:
679.....85

Rules and Regulations

Federal Register
Vol. 62, No. 1
Thursday, January 2, 1997

This section of the FEDERAL REGISTER contains regulatory documents having general applicability and legal effect, most of which are keyed to and codified in the Code of Federal Regulations, which is published under 50 titles pursuant to 44 U.S.C. 1510.

The Code of Federal Regulations is sold by the Superintendent of Documents. Prices of new books are listed in the first FEDERAL REGISTER issue of each week.

DEPARTMENT OF AGRICULTURE

Agricultural Marketing Service

7 CFR Part 1124

[Docket No. AO–368–A25; DA–95–01]

Milk in the Pacific Northwest Marketing Area; Order Amending the Order

AGENCY: Agricultural Marketing Service, USDA.

ACTION: Final rule.

SUMMARY: This final rule adds two counties to the Pacific Northwest milk marketing area and modifies the component pricing provisions of the order.

EFFECTIVE DATE: February 1, 1997.

FOR FURTHER INFORMATION CONTACT: Constance M. Brenner, Marketing Specialist, USDA/AMS/Dairy Division, Order Formulation Branch, Room 2971, South Building, P. O. Box 96456, Washington, DC 20090–6456, (202) 720–2357, e-mail address Connie__M__Brenner@usda.gov.

SUPPLEMENTARY INFORMATION: This administrative rule is governed by the provisions of Sections 556 and 557 of Title 5 of the United States Code and, therefore, is excluded from the requirements of Executive Order 12866.

This final rule has been reviewed under Executive Order 12988, Civil Justice Reform. This rule is not intended to have retroactive effect. This rule will not preempt any state or local laws, regulations, or policies, unless they present an irreconcilable conflict with the rule.

The Agricultural Marketing Agreement Act of 1937, as amended (7 U.S.C. 601–674), provides that administrative proceedings must be exhausted before parties may file suit in court. Under section 608c(15)(A) of the Act, any handler subject to an order may request modification or exemption from such order by filing with the Secretary a petition stating that the order, any provision of the order, or any obligation imposed in connection with the order is not in accordance with the law. A handler is afforded the opportunity for a hearing on the petition. After a hearing, the Secretary would rule on the petition. The Act provides that the District Court of the United States in any district in which the handler is an inhabitant, or has its principal place of business, has jurisdiction in equity to review the Secretary's ruling on the petition, provided a bill in equity is filed not later than 20 days after the date of the entry of the ruling.

Small Business Consideration

In accordance with the Regulatory Flexibility Act (5 U.S.C. 601 et seq.), the Agricultural Marketing Service has considered the economic impact of this action on small entities and has certified that this rule will not have a significant economic impact on a substantial number of small entities. For the purpose of the Regulatory Flexibility Act, a dairy farm is considered a ''small business'' if it has an annual gross revenue of less than $500,000, and a dairy products manufacturer is a ''small business'' if it has fewer than 500 employees. For the purposes of determining which dairy farms are ''small businesses,'' the $500,000 per year criterion was used to establish a production guideline of 326,000 pounds per month. Although this guideline does not factor in additional monies that may be received by dairy producers, it should be an inclusive standard for most ''small'' dairy farmers. For purposes of determining a handler's size, if the plant is part of a larger company operating multiple plants that collectively exceed the 500 employee limit, the plant will be considered a large business even if the local plant has fewer than 500 employees.

Interested persons were invited to present evidence on the probable regulatory and informational impact of the hearing proposals considered in this proceeding on small businesses or to suggest modifications of the proposals for the purpose of tailoring their applicability to small businesses. In addition, in order to properly assess the impact on small businesses, information relating to the impact of the amendments contained in this rule has been obtained from the market administrator.

During August 1996, the representative month for determining producer approval of this action, 1,297 dairy farmers were producers under the Pacific Northwest order. Of these, 808 would be considered small businesses, having under 326,000 pounds of milk production for the month. Of the dairy farmers in the small business category, 219 produced under 100,000 pounds of milk, 328 produced between 100,001 and 200,000 pounds of milk, and 261 produced between 200,001 and 326,000 pounds of milk during August.

Of the 489 producers producing in excess of 326,000 pounds of milk during August 1996, 178 produced between 326,001 and 500,000 pounds of milk, 186 produced between 500,001 and 1,000,000 pounds of milk, and 125 producers produced at least 1,000,001 pounds of milk.

In terms of total dollars, the negative impact on producer returns resulting from the multiple component pricing amendments generally would be less on small producers than it would be on large producers. However, the effect of the amendments on each individual producer would depend on the relative protein, other nonfat solids, and butterfat content of the producer's milk production rather than on the volume of its production.

The effect of the multiple component pricing amendments on handlers, both large and small, would depend on how they use the milk they receive from producers. Handlers' cost of milk used in manufactured products would be reduced by approximately 10 cents per hundredweight, depending upon the component content of the milk. The cost of milk used in fluid products would be unchanged. In addition to butterfat tests, handlers would be required to report protein tests and ''other solids'' tests instead of nonfat solids tests of producer receipts. Because most of this testing is done using infra-red analysis equipment, there should be little additional cost connected with the testing and reporting of the protein component and the ''other solids'' component.

Of the 23 dairy plants pooled under the Pacific Northwest milk order during August 1996, 15 would be considered to be operated by small businesses on the basis of having fewer than 500

employees. Eight of the pool plants were operated by handlers having more than 500 employees.

Expansion of the marketing area to include the two remaining Olympic Peninsula counties would have no effect on producers and would result in the regulation of no additional handlers. Four handlers who currently distribute fluid milk products into the two counties would be benefitted by a reduction in their recordkeeping and reporting burden. Sales outside the marketing area are required to be reported separately for the purpose of determining a handler's pool status. The addition of these two counties to the marketing area will remove the requirement that these handlers keep separate records and file reports about sales in these counties. Two of the handlers affected would be considered to be small entities.

Prior documents in this proceeding:

Notice of Hearing: Issued June 15, 1995; published June 21, 1995 (60 FR 32282).

Extension of Time for Filing Briefs: Issued October 12, 1995; published October 23, 1995 (60 FR 54315).

Extension of Time for Filing Briefs: Issued November 2, 1995; published November 9, 1995 (60 FR 56538).

Recommended Decision: Issued August 19, 1996; published August 23, 1996 (61 FR 43474).

Final Decision: Issued November 21, 1996; published November 29, 1996 (61 FR 60639).

Findings and Determinations

The findings and determinations hereinafter set forth supplement those that were made when the Pacific Northwest order was first issued and when it was amended. The previous findings and determinations are hereby ratified and confirmed, except where they may conflict with those set forth herein.

The following findings are hereby made with respect to the Pacific Northwest order:

(a) Findings upon the basis of the hearing record. Pursuant to the provisions of the Agricultural Marketing Agreement Act of 1937, as amended (7 U.S.C. 601–674), and the applicable rules of practice and procedure governing the formulation of marketing agreements and marketing orders (7 CFR Part 900), a public hearing was held upon certain proposed amendments to the tentative marketing agreement and to the order regulating the handling of milk in the Pacific Northwest marketing area.

Upon the basis of the evidence introduced at such hearing and the record thereof it is found that:

(1) The Pacific Northwest order, as hereby amended, and all of the terms and conditions thereof, will tend to effectuate the declared policy of the Act;

(2) The parity prices of milk, as determined pursuant to section 2 of the Act, are not reasonable in view of the price of feeds, available supplies of feeds, and other economic conditions which affect market supply and demand for milk in the marketing area, and the minimum prices specified in the order, as hereby amended, are such prices as will reflect the aforesaid factors, insure a sufficient quantity of pure and wholesome milk, and be in the public interest; and

(3) The Pacific Northwest order, as hereby amended, regulates the handling of milk in the same manner as, and is applicable only to persons in the respective classes of industrial and commercial activity specified in, a marketing agreement upon which a hearing has been held.

(b) Determinations. It is hereby determined that:

(1) The refusal or failure of handlers (excluding cooperative associations specified in Sec. 8c(9) of the Act) of more than 50 percent of the milk that is marketed within the specified marketing area to sign a proposed marketing agreement tends to prevent the effectuation of the declared policy of the Act;

(2) The issuance of this order amending the Pacific Northwest order is the only practical means pursuant to the declared policy of the Act of advancing the interests of producers as defined in the order as hereby amended;

(3) The issuance of the order amending the Pacific Northwest order is favored by at least two-thirds of the producers who were engaged in the production of milk for sale in the marketing area.

List of Subjects in 7 CFR Part 1124

Milk marketing orders.

Order Relative to Handling

It is therefore ordered, that on and after the effective date hereof, the handling of milk in the Pacific Northwest marketing area shall be in conformity to and in compliance with the terms and conditions of the order, as amended, and as hereby further amended, as follows:

PART 1124—MILK IN THE PACIFIC NORTHWEST MARKETING AREA

1. The authority citation for 7 CFR Part 1124 reads as follows:

Authority: 7 U.S.C. 601–674.

2. Section 1124.2 is amended by revising the list of Washington counties to read as follows:

§ 1124.2 Pacific Northwest marketing area.

* * * * *

Washington counties:

Adams, Asotin, Benton, Chelan, Clallam, Clark, Columbia, Cowlitz, Douglas, Ferry, Franklin, Garfield, Grant, Grays Harbor, Island, Jefferson, King, Kitsap, Kittitas, Klickitat, Lewis, Lincoln, Mason, Okanogan, Pacific, Pend Oreille, Pierce, San Juan, Skagit, Skamania, Snohomish, Spokane, Stevens, Thurston, Wahkiakum, Walla Walla, Whatcom, Whitman and Yakima.

* * * * *

3. Section 1124.30 is amended by revising paragraphs (a)(1) (i) and (ii), and (c) (1) through (3) to read as follows:

§ 1124.30 Reports of receipts and utilization.

* * * * *

(a) * * *

(1) * * *

(i) Milk received directly from producers (including such handler's own production), and the pounds of protein and pounds of solids-not-fat other than protein (other solids) contained therein;

(ii) Milk received from a cooperative association pursuant to §1124.9(c), and the pounds of protein and pounds of solids-not-fat other than protein (other solids) contained therein;

* * * * *

(c) * * *

(1) The pounds of skim milk, butterfat, protein and solids-not-fat other than protein (other solids) received from producers;

(2) The utilization of skim milk, butterfat, protein and solids-not-fat other than protein (other solids) for which it is the handler pursuant to §1124.9(b); and

(3) The quantities of skim milk, butterfat, protein and solids-not-fat other than protein (other solids) delivered to each pool plant pursuant to §1124.9(c).

* * * * *

4. Section 1124.31 is amended by revising paragraphs (a)(1) and (b)(1) to read as follows:

§ 1124.31 Payroll reports.

* * * * *

(a) * * *

(1) The total pounds of milk received from each producer, the pounds of butterfat, protein and solids-not-fat other than protein (other solids) contained in such milk, and the number

of days on which milk was delivered by the producer during the month;

* * * * *

(b) * * *

(1) The total pounds of milk received from each producer and the pounds of butterfat, protein and solids-not-fat other than protein (other solids) contained in such milk;

* * * * *

5. Section 1124.50 is amended by revising paragraph (f) introductory text, paragraph (g), and adding a new paragraph (h) to read as follows:

§ 1124.50 Class and component prices.

* * * * *

(f) The butterfat price per pound, rounded to the nearest one-hundredth cent, shall be the total of:

* * * * *

(g) The protein price per pound, rounded to the nearest one-hundredth cent, shall be 1.32 times the average monthly price per pound for 40-pound block Cheddar cheese on the National Cheese Exchange as reported by the Department.

(h) The other solids price per pound, rounded to the nearest one-hundredth cent, shall be the basic formula price at test less the average butterfat test of the basic formula price as reported by the Department times the butterfat price, less the average protein test of the basic formula price as reported by the Department for the month times the protein price, and dividing the resulting amount by the average other solids test of producer milk pooled under Part 1124 for the month, as determined by the Market Administrator. If the resulting price is less than zero, then the protein price will be reduced so that the other solids price equals zero.

6. Section 1124.53 is revised to read as follows:

§ 1124.53 Announcement of class and component prices.

On or before the 5th day of each month, the market administrator shall announce publicly the following prices:

(a) The Class I price for the following month;

(b) The Class II price for the following month;

(c) The Class III price for the preceding month;

(d) The Class III–A price for the preceding month;

(e) The skim milk price for the preceding month;

(f) The butterfat price for the preceding month;

(g) The protein price for the preceding month;

(h) The other solids price for the preceding month; and

(i) The butterfat differential for the preceding month.

7. Section 1124.60 is amended by redesignating paragraphs (f) through (m) as paragraphs (g) through (n), revising the section heading, the undesignated center heading preceding the section heading, paragraph (e), redesignated paragraphs (g) introductory text, (g)(3), the phrase ''assigned to shrinkage'' in paragraph (h) introductory text to ''assigned to inventory'', (h)(3), and (h)(6), and adding a new paragraph (f) to read as follows:

Producer Price Differential

§ 1124.60 Handler's value of milk.

* * * * *

(e) Multiply the protein price for the month by the pounds of protein associated with the pounds of producer skim milk in Class II and Class III during the month. The pounds of protein shall be computed by multiplying the producer skim milk pounds so assigned by the percentage of protein in the handler's receipts of producer skim milk during the month for each report filed separately;

(f) Multiply the other solids price for the month by the pounds of other solids associated with the pounds of producer skim milk in Class II and Class III during the month. The pounds of other solids shall be computed by multiplying the producer skim milk pounds so assigned by the percentage of other solids in the handler's receipts of producer skim milk during the month for each report filed separately;

(g) With respect to skim milk and butterfat overages assigned pursuant to §1124.44(a)(15), (b) and paragraph (g)(6) of this section:

* * * * *

(3) Multiply the pounds of protein and other solids associated with the skim milk pounds assigned to Class II and III by the protein and other solids prices, respectively;

* * * * *

(h) * * *

(3) Multiply the pounds of protein and other solids associated with the skim milk pounds assigned to Class II and III by the protein and other solids prices, respectively;

* * * * *

(6) Subtract the Class III value of the milk at the previous month's protein, other milk solids, and butterfat prices;

* * * * *

8. Section 1124.61 is amended by revising the section heading, introductory text, and paragraphs (a), (d) and (e) to read as follows:

§1124.61 Producer price differential.

A producer price differential per hundredweight of milk for each month shall be computed by the market administrator as follows:

(a) Combine into one total for all handlers:

(1) The values computed pursuant to §1124.60 (a) through (c) and (g) through (n) for all handlers who filed the reports prescribed by §1124.30 for the month and who made the payments pursuant to §1124.71 for the preceding month; and

(2) Add the values computed pursuant to §1124.60 (d), (e) and (f); and subtract the values obtained by multiplying the handlers'' total pounds of protein and total pounds of other solids contained in such milk by their respective prices;

* * * * *

(d) Divide the resulting amount by the sum, for all handlers, of the total hundredweight of producer milk and the total hundredweight for which a value is computed pursuant to §1124.60(k); and

(e) Subtract not less than 4 cents per hundredweight nor more than 5 cents per hundredweight. The result shall be the producer price differential.

9. Section 1124.62 is removed, and Section 1124.63 is redesignated as Section 1124.62 and revised, including the section heading to read as follows:

§1124.62 Announcement of the producer price differential and a statistical uniform price.

On or before the 14th day after the end of each month, the market administrator shall announce the following prices and information:

(a) The producer price differential;

(b) The protein price;

(c) The other solids price;

(d) The butterfat price;

(e) The average protein and other solids content of producer milk; and

(f) The statistical uniform price for milk containing 3.5 percent butterfat, computed by combining the Class III price and the producer price differential.

10. Section 1124.71 is amended by revising paragraph (a)(1), the reference ''§1124.73(a)(2) (i), (ii), and (iii);'' in paragraph (b)(1) to ''§1124.73(a)(2) (ii) through (iv);'' and paragraph (b)(3) to read as follows:

§1124.71 Payments to the producer-settlement fund.

* * * * *

(a) * * *

(1) The total handler's value of milk for such month as determined pursuant to §1124.60; and

* * * * *

(b) * * *

(3) The value at the producer price differential adjusted for the location of the plant(s) from which received (not to be less than zero) with respect to the total hundredweight of skim milk and butterfat in other source milk for which a value was computed or such handler pursuant to §1124.60(k).

* * * * *

11. Section 1124.73 is amended by revising paragraphs (a)(2) (ii) through (vi), (c) introductory text, (c)(1), the reference ''paragraph (a)(2) (i) through (iii) of this section'' in paragraphs (c)(2) and (d)(2) to ''paragraph (a)(2) (i) through (iv) of this section'', (f)(2), and adding paragraph (a)(2)(vii) to read as follows:

§1124.73 Payments to producers and to cooperative associations.

* * * * *

(a) * * *

(2) * * *

(ii) Add the amount that results from multiplying the protein price for the month by the total pounds of protein in the milk received from the producer;

(iii) Add the amount that results from multiplying the other solids price for the month by the total pounds of other solids in the milk received from the producer;

(iv) Add the amount that results from multiplying the total hundredweight of milk received from the producer by the producer price differential for the month as adjusted pursuant to §1124.74(a);

(v) Subtract payments made to the producer pursuant to paragraph (a)(1) of this section;

(vi) Subtract proper deductions authorized in writing by the producer; and

(vii) Subtract any deduction required pursuant to § 1124.86 or by statute; and

* * * * *

(c) Each handler shall pay to each cooperative association which operates a pool plant, or to the cooperative's duly authorized agent, for butterfat, protein and other solids received from such plant in the form of fluid milk products as follows:

(1) On or before the second day prior to the date specified in paragraph (a)(1) of this section, for butterfat, protein, and other milk solids received during the first 15 days of the month at not less than the butterfat, protein, and other milk solids prices, respectively, for the preceding month; and

* * * * *

(f) * * *

(2) The total pounds of milk delivered by the producer, the pounds of butterfat, protein and other solids contained therein, and, unless previously provided, the pounds of milk in each delivery;

* * * * *

§ 1124.74 [Amended]

12. Section 1124.74(c) is amended by revising, in two locations, the phrase ''weighted average differential price'' to ''producer price differential''.

§ 1124.75 [Amended]

13. Section 1124.75 is amended by adding the phrase ''or statistical uniform price'' after the words ''estimated uniform price'' in the second sentence of paragraph (a)(1)(i), and by revising the phrase ''estimated uniform price'' in the first sentence of paragraph (b)(4) to ''statistical uniform price''.

§ 1124.85 [Amended]

14. Section 1124.85 is amended by revising the reference ''§ 1124.60(h) and (j)'' in paragraph (b) to ''§ 1124.60(i) and (k)''.

Dated: December 30, 1996.

Michael V. Dunn,

Assistant Secretary, Marketing and Regulatory Programs.

[FR Doc. 96–33390 Filed 12–31–96; 8:45 am]

BILLING CODE 3410–02–P

FEDERAL HOUSING FINANCE BOARD

12 CFR Part 932

[No. 96–97]

Selection and Compensation of Federal Home Loan Bank Employees

AGENCY: Federal Housing Finance Board.

ACTION: Final rule.

SUMMARY: The Federal Housing Finance Board (Finance Board) is amending the provisions of its regulations governing the selection and compensation of employees of the Federal Home Loan Banks (Banks) in order to streamline regulatory requirements and transfer specific functions currently performed by the Finance Board to the board of directors of each Bank. The final rule requires a Bank to obtain prior Finance Board approval of the appointment of a new President, but permits a Bank to reappoint an incumbent President without prior Finance Board approval. The final rule also gives the Banks broad authority to set Bank Presidents' salaries within established caps and authorizes the Banks to make incentive payments to their Presidents based on each Bank's performance and on fulfillment of its mission. The devolution of authority to the Banks is consistent with the goals of the Regulatory Reinvention Initiative of the National Performance Review.

EFFECTIVE DATE: January 2, 1997.

FOR FURTHER INFORMATION CONTACT: Barbara Fisher, Director, Office of Resource Management, (202) 408–2586; or David Guy, Associate General Counsel, (202) 408–2536, Federal Housing Finance Board, 1777 F Street, NW., Washington, DC 20006.

SUPPLEMENTARY INFORMATION:

I. Statutory and Regulatory Background

A. Selection of Employees

Section 12(a) of the Federal Home Loan Bank Act (Bank Act) provides that each Bank may select, employ, and fix the compensation of Bank employees, subject to the approval of the Finance Board. *See* 12 U.S.C. 1432(a). Section 932.40 of the Finance Board's regulations, which governs the selection of Bank employees, provides that officers, legal counsel, and employees of a Bank shall be elected or appointed in accordance with the Bank's bylaws. *See* 12 CFR 932.40. Each Bank's bylaws are subject to the approval of the Finance Board. *See* 12 U.S.C. 1432(a). Under each Bank's bylaws, a Bank elects or appoints its President subject to Finance Board approval.

Section 932.40 also sets forth conflicts of interest prohibitions applicable to full-time officers or employees of a Bank, and to counsel retained by a Bank. *See* 12 CFR 932.40. These provisions generally prohibit a Bank employee from acting on behalf of a member or other institution insured by the former Federal Savings and Loan Insurance Corporation (FSLIC), except under specified circumstances and with the consent of the FSLIC. Existing § 932.40 extends this prohibition to counsel and attorneys of any Bank, whether employed on a salary, fee, retainer, or other basis, unless the Finance Board consents to such representation. *See id.*

B. Compensation

1. Bank Presidents

Under section 12(a) of the Bank Act, the compensation of all Bank employees is subject to Finance Board approval. *See* 12 U.S.C. 1432(a). However, under its existing regulation on Bank employee compensation, *prior* Finance Board approval is required only for compensation of a Bank's President. *See* 12 CFR 932.41(a). Section 932.41 of the Finance Board's existing compensation regulation requires the board of directors of each Bank annually to adopt and submit to the Finance Board for its

approval an appropriate resolution showing the contemplated compensation of its President. *See id.*

In setting the compensation of their Presidents, the Banks are governed by the Bank Presidents' Compensation Plan (Compensation Plan), adopted by the Finance Board on November 19, 1991, as amended from time to time. *See* Bd. Res. No. 91–565 (as amended). The Compensation Plan establishes base salary guidelines, merit increase (to base salary) guidelines, and criteria for incentive payments for Bank Presidents. The Compensation Plan requires each Bank annually to submit for Finance Board approval recommendations for merit increases to its President's base salary and proposed incentive payments.

2. Other Bank Employees

Section 932.41(b) of the Finance Board's existing compensation regulation permits a Bank to fix the compensation of officers other than the President without prior Finance Board approval, provided that such compensation is within ranges established by the Finance Board and the total limits for such compensation in the Bank's approved budget. *See* 12 CFR 932.41(b). Each Bank may establish the amount and form of compensation for all other employees (including legal counsel) within the limits set forth in the Bank's approved budget. *See id.* Section 932.41(b) also prohibits a Bank from paying a bonus to any director, officer, employee, or other person. *See id.*

In Resolution No. 84–390, dated July 25, 1984, the Finance Board's predecessor agency, the Federal Home Loan Bank Board (FHLBB), established a cap on compensation of Bank employees other than the President, providing that the salary of the second-highest-paid Bank officer may not exceed 80 percent of the Bank President's salary. This resolution currently remains in effect. *See* 12 U.S.C. 1437 note.

II. Proposed Rulemaking

On August 16, 1996, the Finance Board published for public comment a notice of proposed rulemaking, which proposed to amend §§ 932.40 and 932.41 of its regulations to clarify the scope of the Banks' discretion in selecting and fixing the compensation of Bank Presidents and other Bank employees. *See* 61 FR 42570 (Aug. 16, 1996) (proposed rule). The proposed rule also included amendments to § 941.9 of the Finance Board's regulations to codify the Finance Board's existing practice regarding the annual appointment and compensation of the Director of the Office of Finance (OF) and other OF employees. *See id.* The proposed rule provided for a 60-day comment period.

The Finance Board received letters from a total of 49 commenters, including all 12 Banks, a joint Bank committee on Bank Presidents' compensation, 32 Bank members, 2 not-for-profit housing organizations, one advocacy group, and one individual. The commenters generally supported the concept of transferring to the individual Banks more authority to determine the compensation of Bank employees and, in particular, the Bank Presidents. However, various commenters stated that the Banks should have more authority in this area than would be allowed under the proposed rule. Commenters also generally supported giving the Banks more control over the appointment of Bank Presidents than would be permitted under the proposed rule.

A discussion of the relevant comments is included below in the Analysis of the Final Rule. Where no comments were received on a particular regulatory provision, or a provision was not considered controversial, and the Finance Board has determined to adopt the provision as proposed, the provision generally is not discussed in this preamble. The Finance Board is deferring action on the portions of the proposed rule pertaining to the selection and compensation of OF employees and benefits until a later date.

III. Analysis of the Final Rule

A. Selection of Employees

1. Bank Presidents

Section 932.40(a) of the proposed rule codified the Finance Board's existing practice of approving the appointments of Bank Presidents for one-year terms. The preamble to the proposed rule interpreted the one-year appointment requirement to prohibit a President from holding over upon expiration of his or her term of office, and to supersede the existing provisions in the Banks' by-laws allowing for the holdover of Bank Presidents.

Twenty-two commenters opposed requiring Finance Board approval of the initial appointment and the reappointment of Bank Presidents. Many commenters believed that the Finance Board should rely on the boards of the Banks to appoint the Bank Presidents, given that the boards are duly elected by the members and appointed by the Finance Board, and the Banks are for-profit, privately capitalized institutions owned by their stockholders. According to some commenters, requiring Finance Board approval of reappointment also may discourage qualified candidates from seeking the Presidencies. Several commenters recommended that the Bank's boards be permitted to enter into multi-year employment contracts with their Presidents.

Ten commenters opposed requiring Finance Board approval of the reappointment of Bank Presidents, but these commenters either supported or would not necessarily object to the Finance Board having a role in approving the initial appointment of Bank Presidents.

While the Banks may be characterized as for-profit, privately capitalized institutions owned by their stockholders, the Banks exist primarily to carry out a public purpose: the promotion and expansion of housing finance. *See* 12 U.S.C. § 1422a(a)(3)(B)(ii). Therefore, a Bank's President is charged with representing and furthering not only the interests of the Bank's stockholders but also the interests of the public. The Bank Act provides that the primary duty of the Finance Board is to ensure that the Banks operate in a financially safe and sound manner. *See id.* § 1422a(a)(3)(A). The other statutory duties of the Finance Board are to: supervise the Banks; ensure that they carry out their housing finance mission; and ensure that they remain adequately capitalized and able to raise funds in the capital markets. *See id.* § 1422a(a)(3)(B).

The Finance Board believes that retaining approval authority over a Bank's selection of its highest officer is necessary to carry out the Finance Board's statutory duties. Therefore, § 932.40(a) of the final rule requires a Bank to obtain prior Finance Board approval of the appointment of a new President. However, a Bank may reappoint an incumbent President without prior Finance Board approval. For purposes of clarity and completeness, § 932.40(a) also restates the statutory requirements in sections 2B(a)(2) and 12(a) of the Bank Act providing, respectively, that: (1) a Bank President may be suspended or removed by the Finance Board for cause, which shall be communicated in writing to the President and the Bank, and (2) a Bank President serves at the pleasure of the Bank. *See id.* §§ 1422b(a)(2), 1432(a).

Twenty-four commenters opposed elimination of a Bank President's ability to holdover on the ground that, among other things, this may lead to a situation where a Bank is without leadership if the Finance Board fails to approve a new President. By requiring prior

Finance Board approval only of new Bank Presidents, the final rule allows for the holdover of an incumbent Bank President.

2. Other Bank Employees

Section 932.40(b) of the final rule adopts the language of the proposed rule providing that a Bank may appoint or elect officers other than the President and may hire other employees of the Bank without prior Finance Board approval.

3. Conflicts of Interests

Proposed § 932.40(c) updated the conflicts of interest provisions in existing § 932.40 by eliminating references to the FSLIC, which was abolished by Congress in 1989. *See id.* § 1437 note. The proposed rule retained, in substance, the existing requirement that a Bank employee shall not act in any capacity for certain specified institutions whose interests are likely to be in conflict with the interests of the Bank. Specifically, proposed § 932.40(c) prohibited a Bank employee from being employed by, or acting in any other capacity for, a Bank member or an institution eligible to make application to become a Bank member. The final rule adopts proposed § 932.40(c), without change.

B. Compensation of Bank Employees

1. Base Salaries

a. *Bank Presidents.* The proposed rule permitted each Bank to establish the base salary of its President within specific ranges, based on the Bank's asset size, and to pay yearly merit increases, up to a maximum rate set by the Finance Board. The general consensus of the commenters was that the boards of directors of the Banks should be permitted to set compensation for all Bank employees, including the Presidents, provided such compensation is reasonable and comparable to what is being paid in the marketplace. Commenters generally opposed Finance Board control over the compensation of the Bank Presidents, except to the extent that it relates to safety and soundness of the Banks. Commenters made a variety of arguments in support of these positions, including: (1) The establishment of detailed requirements governing compensation for Bank Presidents is not necessary to ensure that the Banks operate safely and soundly; (2) a Bank's strategic advantage of being a regionally based entity able to experiment with new ways to meet local housing needs is hindered by nationally mandated compensation goals; (3) placing the compensation issue in the hands of a regulator is contrary to the intent and mission of the Banks, which are for-profit, shareholder-owned enterprises, and creates a conflict of interest for the Finance Board in its capacity as a regulator; and (4) codifying the Bank Presidents' salaries in regulation politicizes the compensation process and treats the Presidents like public, rather than private sector employees. Several commenters recommended that the Finance Board adopt the approach of other federal bank regulatory agencies that limit compensation only for executives of institutions with safety and soundness problems.

The Finance Board finds merit in the ideas that detailed regulatory requirements for the compensation of Bank Presidents do not necessarily further the goal of ensuring the safe and sound operation of the Banks, and that a Bank should have flexibility to establish compensation goals that encourage the Bank to address local housing needs. The Finance Board also agrees that management functions, such as the establishment of employee compensation, should be in the hands of the Banks to the maximum extent feasible.

However, the Finance Board disagrees with the idea that it should approach the regulation of Bank employee compensation in the same manner as regulators of private entities, such as commercial banks and savings associations, which are not government chartered corporations. Although the primary duty of the Finance Board is to ensure the financial safety and soundness of the Banks, the Finance Board also has a statutory mandate to ensure that the Banks carry out their programmatic purposes in the area of housing finance. *See id.* § 1422a(a)(3)(A), (B)(ii). Unlike the institutions regulated by other federal bank regulators, the Banks exist primarily to serve the public interest. *See id.* § 1422a(a)(3)(B)(ii). Consequently, the Finance Board has an interest in exercising some control over the compensation of Bank Presidents, not only to ensure the safety and soundness of the Banks, but also to ensure that the programmatic goals of the Banks are met.

The Finance Board currently determines the salary ranges for Bank Presidents using a comparability model based on the salaries of the chief operating officers (COO) of private financial subsidiaries of similar asset size and geographic location, offset by staff size. The preamble to the proposed rule specifically requested comment on the appropriate universe of entities that should be used in establishing the comparability of the Bank Presidents' salaries. For instance, it has been suggested that the salaries of the Bank Presidents should be comparable to the salaries of the Presidents (or their equivalent) of the Federal Reserve Banks, other segments of the financial services industry, or other federally or state-created entities with similar size, functions, and mission. The Bank Presidents' Compensation Committee (Compensation Committee), which is comprised of persons appointed from each of the 12 Banks, retained Hewitt Associates, LLC, to review the proposed rule. The Hewitt Associates study (Hewitt study) concluded, among other things, that the banking industry is the appropriate comparator group for the Bank Presidents in setting compensation, and that the chief executive officer (CEO) of a bank subsidiary is a more appropriate match than a COO of a subsidiary.

Most of the Banks' comments on this issue are in accord with the conclusions of the Hewitt study. Several Banks and the Hewitt study concluded that an offset based on asset base and staff size should be used in the development of compensation levels. The two Bank members that addressed this issue believed that Bank Presidents' compensation should be comparable with the salaries of CEOs of organizations of similar size, scope, and risk.

In light of the public purpose of the Banks, the issue for the Finance Board in determining comparability of compensation is not how the Bank Presidents are different from comparable positions in the private sector, but how the Bank Presidents are different from comparable positions with governmental or quasi-governmental entities.

The Hewitt study concluded that the Federal Reserve Banks (FRBs) are not an appropriate comparator group for the Banks because the Banks are profit-driven in that they are owned by their members, who are entitled to dividends. Further, the Banks operate in a competitive environment and must market their services to members and prospective customers. In addition, the Banks make statutorily mandated annual payments of $300 million to the Resolution Funding Corporation, *see* 12 U.S.C. 1441b, and at least $100 million to the Affordable Housing Program, *see id.* § 1430(j).

In contrast to the Banks, the FRBs' primary mission is governmental, and the FRBs do not manage an investment portfolio. One Bank commenter stated that the FRBs are not appropriate

comparators for the Banks on this issue because: (1) they carry out governmental monetary and regulatory functions; (2) their boards are advisory in nature; (3) their stock pays a fixed return; and (4) their profits are returned to the Department of the Treasury.

In recognition of the expressed arguments against detailed regulatory requirements for Bank Presidents' compensation, the final rule does not adopt those provisions in the proposed rule prescribing salary ranges and merit increase rates. The final rule provides for the Finance Board, on an annual basis, to determine and publish by November 30 individual caps on the base salaries payable to each of the Banks' Presidents for the subsequent calendar year. The base salary cap for each Bank President shall be based on the average base salary of a CEO of a subsidiary financial institution in the Bank's primary metropolitan statistical area with an asset size comparable to that of the Bank, as of June of the prior year, reduced by five percent and rounded to the nearest $5,000. The five percent reduction is intended to reflect the public purpose of the Banks. Each Bank shall establish, on an annual basis, a reasonable base salary for its President, not to exceed 100 percent of the applicable base salary cap published by the Finance Board. However, those Bank Presidents whose currently approved and recommended base salaries for 1997 exceed the 1997 cap will not experience any reduction in base salary. These Presidents' base salaries will be capped at their current levels until the annual cap set by the Finance Board for the Bank exceeds the 1997 base salary currently approved and recommended for the President by the Bank's board of directors. By January 2 of each year, a Bank must report to the Finance Board the approved base salary of its President for that year.

b. *Other Bank Employees.* The proposed rule permitted each Bank to establish base salaries for employees other than the President without prior Finance Board approval, provided such salaries are reasonable and comparable with the base salaries of employees of the other Banks and other similar businesses, such as similar financial institutions, with similar duties and responsibilities. Section 932.41(b)(2) adopts the provisions of the proposed rule, with the additional requirement that no employee's base salary shall exceed the base salary of the Bank President. This is intended to ensure the effectiveness of the cap on the Bank President's salary.

2. Incentive Payments

a. *Bank Presidents.* The proposed rule required incentive payments to Bank Presidents to be based solely on the performance of the Bank, rather than on the President's individual performance. The proposed rule established specific criteria on which a Bank President's incentive payment is to be based, and required the boards of directors of the Banks to establish numerical performance targets and measures to be used in determining a Bank President's incentive payment. Specifically, the proposed rule provided that at least 20 percent of any incentive payment for a Bank President must be based on certain specified criteria illustrating the Bank's emphasis on the portion of its mission involved with support for member credit activities; at least 30 percent of any incentive payment must be based on certain specified criteria illustrating the Bank's emphasis on additional support for housing and community development finance; and the remaining portion of the incentive payment must be based on the Bank's performance in achieving other objectives established by the Bank's board of directors.

The proposed rule provided that performance targets must be set at such a level as to show an improvement in the Bank's performance over the prior year or an extraordinary achievement in attaining the designated target. In order to obtain the maximum incentive payment, the proposed rule required a Bank President to achieve 150 percent of the performance target for a given incentive criterion.

Nine Banks specifically opposed the setting of standard criteria for incentive payments throughout the Bank System. Commenters recommended that each Bank's board of directors be permitted to establish incentive payment criteria in order to ensure a complete reflection of the issues the boards believe are critical. Several Banks commented that there is no logical relationship between meeting 150 percent of a performance target and an outstanding level of performance.

The final rule gives the Banks more flexibility to determine the basis for incentive payments to Bank Presidents, but retains the requirements that such payments be based solely on the performance of the Bank and that they be based in part on the Bank's measured progress in the achievement of its mission.

Section 932.41(c)(2) of the final rule provides that at least fifty percent of the Bank President's incentive payment must be based on the extent to which the Bank meets reasonable numerical performance targets established by the Bank's board of directors related to the Bank's achievement of its housing finance mission, which shall include substantial consideration of growth in innovative products directed at unmet credit needs, growth in pre-committed Community Investment Program (CIP) advances, growth in non-advance credit support and risk management products for members, as well as growth in advances, including long-term advances. Pre-committed CIP advances means CIP advances provided in support of new CIP lending activity, not refinancings of existing CIP-eligible loans.

The remaining portion of the incentive payment must be based on the extent to which the Bank meets reasonable numerical performance targets related to the achievement of goals established by the Bank's board of directors, in its discretion. By January 31 of each year, the board of directors of each Bank that intends to make any incentive payment to its President for such year shall adopt a resolution establishing the performance measures and targets on which such incentive payment will be based. Any incentive payment made to a Bank President shall be based solely upon the extent to which a Bank achieves the performance targets established by the board of directors.

The preamble to the proposed rule requested comments on the appropriateness and the reasons for limiting a Bank President's total incentive payment to a maximum percentage of base salary, at some point in the range between zero and 37.5 percent. Under the existing Bank President's Compensation Plan, prior to the most recent amendment, the maximum incentive payment payable to a Bank President was 37.5 percent of base salary. The Compensation Plan was amended on July 25, 1996, to limit an incentive payment to 31.25 percent of base salary. *See* Bd. Res. 96–54 (July 25, 1996).

Eight Banks opposed the 31.25 percent and 37.5 percent limits on incentive payments as arbitrary and not reflective of marketplace conditions. Several Banks commented that their boards should be permitted to set limits on incentive compensation based on the industry-wide average. Commenters also stated that the Banks should be permitted to determine the appropriate mix between base salary and incentive compensation for their employees. The final rule attempts to provide the added flexibility recommended by commenters.

The final rule provides that a Bank may establish an incentive payment program or programs for its employees. The maximum incentive payment to a Bank President may not exceed the difference between that President's base annual salary approved by the Bank and 125 percent of the annual base salary cap, as published by the Finance Board. The effect of this provision is to limit a Bank President's total cash compensation payable in salary and incentive compensation to 125 percent of the amount of the base salary cap established by the Finance Board for that Bank.

The proposed rule prohibited a Bank from making any incentive payment to its President if the most recent examination of the Bank by the Finance Board identified an unsafe or unsound practice or condition with regard to the Bank. The Finance Board specifically requested comment on whether there are other events or conditions that should result in a prohibition on incentive payments to Bank Presidents.

Several Banks opposed the prohibition on incentive payments based on examination findings because such a practice would make the examination process more adversarial and potentially could deny a President an incentive payment based on an examination finding that may be reversed upon appeal. One Bank and the Compensation Committee recommended clarifying that if an examination finding of an unsafe or unsound practice or condition is subsequently resolved in favor of the Bank, the Bank's board will be allowed to pay a Bank President an incentive payment retroactively. The final rule makes this clarification.

The Finance Board wishes to make clear that the proposed rule does not require a Bank to make incentive payments, but if a Bank chooses to make such payments, it must meet the requirements of § 932.41(c).

b. *Other Bank Employees.* The final rule adopts the provisions of the proposed rule authorizing the Banks to make incentive payments to employees other than the Bank Presidents that are reasonable and comparable with incentive payments made to employees of the other Banks and other similar businesses (including financial institutions) with similar duties and responsibilities. The final rule also provides that incentive payments for employees other than the Bank President shall be based on the extent to which an employee meets objective performance targets related to performance criteria established by the Bank's board of directors under the Bank's incentive compensation program or programs. The final rule limits the incentive payment opportunities for employees other than the President such that the total incentive payment opportunity, expressed as a percentage of base salary, for an employee other than the Bank President shall not exceed the total incentive payment opportunity, expressed as a percentage of base salary, allowable for the Bank President.

3. Benefits

The proposed rule authorized the Banks to establish certain kinds of benefits plans for their employees and to provide benefits pursuant to such plans without prior Finance Board approval. The Finance Board is deferring action on the portions of the proposed rule governing benefits until a later date.

4. Severance Payment Plans

The proposed rule authorized the Banks to establish nondiscriminatory severance plans that provide benefits upon involuntary termination other than for cause, voluntary resignation, or early retirement, provided that total benefits paid do not exceed one year of employee base compensation.

Nine Banks believed that the Banks should be permitted to set their own severance policies, without the limitation that severance payments not exceed 12 months of base compensation. Commenters suggested that severance payments to employees who are discharged for cause may be warranted in some circumstances, and that the ''for cause'' exception could result in litigation over whether a Bank had cause to terminate an employee. One Bank objected to the denying severance to an employee in the case of early retirement.

The final rule retains the 12-month rule as a reasonable limitation on severance payments. In addition, the restriction on severance payments to employees terminated for cause is removed. The final rule provides for severance payments to be made in cases of involuntary termination. Thus, the final rule continues the restriction on severance payments for early retirees on the ground that severance payment plans are intended to provide for income replacement in the event of involuntary termination.

5. Change-of-Control Agreements

The Finance Board requested comments on whether the Banks should be permitted to enter into change-of-control arrangements with certain senior officers. Change-of-control agreements, so-called ''golden parachutes,'' typically are entered into with senior management and provide for guaranteed, and often enhanced, severance in the event of termination of employment following some period after a change of control.

All 12 Banks believed change-of-control agreements are important to maintaining the safety and soundness of a Bank in cases where merger or consolidation is imminent, and that the Banks' boards should be permitted to enter into and determine the terms of change-of-control agreements with Bank officers.

While the Finance Board is not opposed to the use of change-of-control agreements in the appropriate situation, the Finance Board is not authorizing the Banks to have such agreements with their employees at this time. The Finance Board will take into consideration the need for such agreements should events arise that would make change-of-control agreements relevant.

IV. Effective Date

The Finance Board has approved this final rule to become effective immediately upon publication, on the ground that, as described above, the final rule relieves restrictions placed on the Banks by the existing provisions of §§ 932.40 and 932.41 of its regulations. Therefore, the thirty-day delay in the effective date that otherwise would be required by section 552 of the Administrative Procedures Act is not applicable to this final rule. *See* 5 U.S.C. 553(d)(1).

V. Regulatory Flexibility Act

The final rule applies only to the 12 Banks, which do not come within the meaning of ''small entities,'' as defined by the Regulatory Flexibility Act (RFA). 5 U.S.C. 601. Therefore, in accordance with the RFA, the Finance Board hereby certifies that final rule will not have a significant economic impact on a substantial number of small entities.

List of Subjects in 12 CFR Part 932

Conflict of interests, Federal home loan banks.

Accordingly, chapter IX, title 12, subchapter B, Code of Federal Regulations, is hereby amended as follows:

SUBCHAPTER B—FEDERAL HOME LOAN BANK SYSTEM

PART 932—ORGANIZATION OF THE BANKS

1. The authority citation for Part 932 is revised to read as follows:

Authority: 12 U.S.C. 1422a, 1422b, 1426, 1427, 1432; 42 U.S.C. 8101 *et seq.*

2. Section 932.40 is revised to read as follows:

§ 932.40 Selection.

(a) *Bank Presidents.* Each Bank may appoint a President, subject to the following limitations:

(1) No appointment of a new Bank President shall be effective until approved by the Finance Board;

(2) A President shall serve at the pleasure of the Bank; and

(3) A President may be suspended or removed by the Finance Board for cause, which shall be communicated in writing to the President and the Bank.

(b) *Bank employees other than the President.* Each Bank may appoint or elect officers other than the President and may hire other employees of the Bank without prior Finance Board approval.

(c) *Prohibition on employment contracts.* A Bank shall not enter into an employment contract with an employee.

(d) *Conflicts of interest.* A Bank employee shall not also be employed by, or otherwise act in any capacity for, a member or an institution eligible to make application to become a member.

3. Section 932.41 is revised to read as follows:

§ 932.41 Compensation.

(a) *Definitions.* The following definitions apply for purposes of this section:

Bonus means a payment to an employee, other than base salary and benefits, that is not based on performance.

Incentive payment means a direct or indirect transfer of funds by a Bank to a Bank employee, in addition to base salary, based on the employee's on-the-job performance.

Nondiscriminatory means that the plan, contract or arrangement in question applies to all employees of a Bank who meet reasonable and customary eligibility requirements applicable to all employees, such as minimum length of service requirements. A nondiscriminatory plan, contract, or arrangement may provide different benefits based only on objective criteria such as base salary, total compensation, length of service, job grade or classification, which are applied on a proportionate basis.

Payment. (1) the term *payment* means:

(i) Any direct or indirect transfer of any funds or any asset;

(ii) Any forgiveness of any debt or other obligation; and

(iii) Any segregation of any funds or assets, the establishment or funding of any trust or the purchase of, or arrangement for, any letter of credit or other instrument for the purpose of making, or pursuant to any agreement to make, any payment on or after the date on which such funds or assets are segregated, or at the time of or after such trust is established or letter of credit or other instrument is made available, without regard to whether the obligation to make such payment is contingent on:

(A) The determination, after such date, of the liability for the payment of such amount; or

(B) The liquidation, after such date, of the amount of such payment.

(2) The term *payment* does not mean:

(i) Reimbursement of an employee by the Bank for necessary and customary expenses incurred by the employee in the scope of his or her employment while carrying out the business of the Bank; or

(ii) Benefits.

Severance pay plan means a severance pay plan or arrangement as that term is defined in the Employee Retirement Income Security Act of 1974 (as amended) (29 U.S.C. 1002(1)) (ERISA) and regulations thereunder which is nondiscriminatory and which provides for payment of severance benefits to all eligible employees upon involuntary termination, provided that no employee shall receive any such payment which exceeds the base compensation paid to such employee during the twelve (12) months immediately preceding termination of employment.

(b) *Base salaries of Bank employees.*—(1) *Bank President.* (i) The Finance Board annually will determine and publish by November 30 caps on the base salary paid to the Bank President for the subsequent calendar year for each of the 12 Banks.

(ii) The base salary cap for each Bank shall be based on the average base salary of a chief executive officer of a subsidiary financial institution in the Bank's primary metropolitan statistical area with an asset size comparable to that of the Bank, as of June of the prior year, reduced by five percent and rounded to the nearest $5,000.

(iii) Each Bank shall establish, on an annual basis, a reasonable base salary for its President, not to exceed 100 percent of the applicable base salary cap published by the Finance Board, except that for a Bank President whose approved base salary for the calendar year 1997 exceeds the cap published by the Finance Board for 1997, the Bank shall establish, on an annual basis, a reasonable base salary not exceeding the greater of the Bank President's approved base salary for the calendar year 1997 or the base salary cap published by the Finance Board for the year.

(iv) By January 31 of each year, a Bank must report to the Finance Board the approved base salary of its President for that year.

(2) *Other Bank employees.* Each Bank shall establish base salaries for employees other than the President that are reasonable and comparable with the base salaries of employees of the other Banks and other similar businesses (including financial institutions) with similar duties and responsibilities, provided that no employee's base salary shall exceed the base salary of the Bank President.

(3) *Documentation.* Each Bank shall maintain documentation supporting the reasonableness and comparability of their employees' base salaries.

(c) *Incentive payments for Bank employees.*—(1) *In general.* A Bank may establish an incentive payment program or programs for its employees.

(2) *Bank President.* (i) The maximum incentive payment to a Bank President may not exceed the difference between that President's base annual salary approved by the Bank and 125 percent of the annual base salary cap, as published by the Finance Board.

(ii) At least fifty percent of the Bank President's incentive payment shall be based on the extent to which the Bank meets reasonable numerical performance targets established by the Bank's board of directors related to the Bank's achievement of its housing finance mission, which shall include substantial consideration of growth in innovative products directed at unmet credit needs, growth in pre-committed Community Investment Program advances, growth in non-advance credit support and risk management products for members, as well as growth in advances, including long-term advances. The remaining portion of the Bank President's incentive payment shall be based on the extent to which the Bank meets reasonable numerical performance targets established by the Bank's board of directors related to achievement of goals established by the board of directors, in its discretion.

(iii) Any incentive payment made to a Bank President shall be based solely upon the extent to which a Bank achieves the performance targets established by the board of directors.

(iv) By January 31 of each year, the board of directors of each Bank that intends to make any incentive payment to its President for such year shall adopt a resolution establishing the performance measures and targets on which such incentive payment will be based.

(v) By March 1 of each year, the board of directors of each Bank making any incentive payment to its President for the prior year shall adopt and submit to the Finance Board a resolution showing the results for the individual performance measures and the amount of the incentive payment to the Bank President for the prior year.

(vi) A Bank shall not make any incentive payment to its President if the most recent examination of the Bank by the Finance Board identified an unsafe or unsound practice or condition with regard to the Bank, provided that if the finding of an unsafe or unsound practice or condition subsequently is resolved in favor of the Bank by the Finance Board, the Bank may pay its President the incentive payment that he or she otherwise would have received.

(3) *Incentive payments for other Bank employees.* (i) Each Bank may make incentive payments to employees other than the President, provided that such incentive payments are reasonable and comparable with incentive payments made to employees of the other Banks and other similar businesses (including financial institutions) with similar duties and responsibilities. Each Bank shall maintain documentation supporting the reasonableness and comparability of their employees' incentive payments.

(ii) The total incentive payment opportunity, expressed as a percentage of base salary, for an employee other than the Bank President shall not exceed the total incentive payment opportunity, expressed as a percentage of base salary, allowable for the Bank President.

(iii) An incentive payment for an employee other than the Bank President shall be based on the extent to which the employee meets objective performance targets related to performance criteria established by the Bank's board of directors under the Bank's incentive compensation program or programs.

(d) *Severance plans.* A Bank may make payments in the nature of severance to its President and to other Bank employees only pursuant to a severance pay plan.

(e) *General limits on payments.* (1) No Bank shall make any payment to a Bank employee, except as provided in this section.

(2) The total amount of base salaries, incentive payments, and benefits paid to Bank employees shall be within the limit set forth in the Bank's approved budget. The board of directors of each Bank shall review annually the compensation for its employees, including appropriate documentation, prior to approving the Bank's annual budget.

(f) *Prohibition on bonuses.* A Bank shall not pay any employee or other person a bonus.

(g) *Determination of employee status.* A Bank shall not treat an employee as an independent contractor in order to avoid complying with the requirements of this section.

By the Board of Directors of the Federal Housing Finance Board.

Dated: December 20, 1996.

Bruce A. Morrison,

Chairman.

[FR Doc. 96–33329 Filed 12–31–96; 8:45 am]

BILLING CODE 6725–01–U

DEPARTMENT OF TRANSPORTATION

Federal Aviation Administration

14 CFR Part 39

[Docket No. 96–CE–09–AD; Amendment 39–9872; AD 97–01–01]

RIN 2120–AA64

Airworthiness Directives; The New Piper Aircraft, Inc. PA24, PA28R, PA30, PA32R, PA34, and PA39 Series Airplanes

AGENCY: Federal Aviation Administration, DOT.

ACTION: Final rule.

SUMMARY: This amendment adopts a new airworthiness directive (AD) that supersedes AD 95–20–07, which currently requires repetitively inspecting the main gear sidebrace studs for cracks on certain The New Piper Aircraft, Inc. (Piper) PA24, PA28R, PA30, PA32R, PA34, and PA39 series airplanes, and replacing any cracked main gear sidebrace stud. This AD retains the repetitive inspection and possible replacement requirements of AD 95–20–07; specifies in the ''Applicability'' section of the AD that certain Model PA34–200T airplanes could contain a certain main gear sidebrace assembly configuration that is not affected; and incorporates additional modification and replacement options. This AD results from additional information received by the Federal Aviation Administration (FAA) after the issuance of AD 95–20–07 on the design and service history of the affected airplanes concerning this subject. The actions specified by this AD are intended to prevent a main landing gear collapse caused by main gear sidebrace stud cracks, which could result in loss of control of the airplane during landing operations.

EFFECTIVE DATE: February 7, 1997.

ADDRESSES: Information that applies to this AD may be examined at the FAA, Central Region, Office of the Assistant Chief Counsel, Attention: Rules Docket 96–CE–09–AD, Room 1558, 601 E. 12th Street, Kansas City, Missouri 64106.

FOR FURTHER INFORMATION CONTACT: Christina Marsh, Aerospace Engineer, FAA, Atlanta Aircraft Certification Office, Campus Building, 1701 Columbia Avenue, suite 2–160, College Park, Georgia 30337–2748; telephone (404) 305–7362; facsimile (404) 305–7348.

SUPPLEMENTARY INFORMATION:

Events Leading to This Action

A proposal to amend part 39 of the Federal Aviation Regulations (14 CFR part 39) to include an AD that would apply to Piper PA24, PA28R, PA30, PA32R, PA34, and PA39 series airplanes was published in the Federal Register on April 25, 1996 (61 FR 18299). The action proposed to supersede AD 95–20–07 with a new AD that would (1) retain the requirement of repetitively inspecting the main gear sidebrace assembly, and replacing any cracked main gear sidebrace stud. This includes the inspection-terminating replacement contained in AD 95–20–07; (2) specify in the ''Applicability'' section of the current AD that certain Piper Model PA34–200T airplanes could incorporate a main gear sidebrace assembly containing the ⅝-inch stud, part number (P/N) 78717–02, with a two-piece bushing, P/N 67026–09, and would not be affected by the proposed AD; and (3) incorporate, as an option, an inspection-terminating modification for Piper PA28R, PA32R, and PA34 series airplanes. This modification consists of reaming the existing two-piece bushings, P/N 67026–6, to an inside diameter of .624-inch to .625-inch, rechamfering the bushing, and installing the ⅝-inch stud, P/N 78717–02.

Interested persons have been afforded an opportunity to participate in the making of this amendment. Due consideration has been given to the two comments received from one commenter.

Comment Issue No. 1: Include a Specific FAA-Approved Parts Manufacture Approval (PMA) in the AD as Replacement Parts

The commenter, Webco Aircraft (Webco), states that it holds a PMA for main gear sidebrace studs to equip the Piper Models PA24, PA24–250, PA24–260, PA24–400, PA30, and PA39 airplanes. Webco requests that the FAA

reference these main gear sidebrace studs in the AD.

The FAA does not concur. FAA policy is to not reference PMA parts in AD's, unless the FAA determines that the unsafe condition applies to the PMA parts. If these Webco parts are installed, then the actions of this AD would not apply because the parts are an FAA-approved equivalent to the Piper main gear sidebrace studs that, when installed, eliminate the repetitive inspection requirement of the AD.

Comment Issue No. 2: Additional Information Added to the AD

Webco recommends that the FAA add cautionary information to the AD on reaming and chamfering the existing two-piece bushings, P/N 67026–6, on the Piper PA–28R, PA–32R, and PA–34 series airplanes. Webco states that the manufacturing and service limits for the P/N 67026–6 bushings are so close that reaming could induce gouges that are deeper than the minimum dimension specified by The New Piper Aircraft, Inc. Webco also recommends that the FAA incorporate specific guidance into the AD, emphasizing that only the head side of the bushing requires chamfering to accommodate the radius in the shank of the sidebrace stud.

The FAA concurs that additional guidance on chamfering the bushing would be helpful and has reworded the AD to incorporate the commenter's specific recommendation.

The FAA does not concur that more guidance is needed on reaming the bushings. The proposal specifies reaming the inside diameter of the bushings to a dimension of .624-inch to .625-inch. If the bushing is reamed to a dimension other than that specified in the AD, then compliance with the AD would not be accomplished.

The FAA's Determination

After careful review of all available information related to the subject presented above, the FAA has determined that air safety and the public interest require the adoption of the rule as proposed except for the incorporation of guidance on chamfering the bushings and minor editorial corrections. The FAA has determined that the incorporation and minor corrections will not change the meaning of the AD and will not add any additional burden upon the public than was already proposed.

Cost Impact

The FAA estimates that 13,200 airplanes in the U.S. registry will be affected by this AD, that it will take approximately 5 workhours per airplane to accomplish the required action, and that the average labor rate is approximately $60 an hour. Based on these figures, the total cost impact of the required inspection on U.S. operators is estimated to be $3,960,000. This figure represents the total cost of the required initial inspection, and does not reflect costs for any of the required repetitive inspections or possible replacements. The FAA has no way of determining how many main gear sidebrace studs may need replacement or how many repetitive inspections each owner/operator may incur over the life of the airplane.

In addition, this AD requires the same inspections required by AD 95–20–07. The only difference between this AD and AD 95–20–07 is the addition of an inspection-terminating modification option. This AD does not provide any additional cost impacts over that already required by AD 95–20–07.

Regulatory Impact

The regulations adopted herein will not have substantial direct effects on the States, on the relationship between the national government and the States, or on the distribution of power and responsibilities among the various levels of government. Therefore, in accordance with Executive Order 12612, it is determined that this final rule does not have sufficient federalism implications to warrant the preparation of a Federalism Assessment.

For the reasons discussed above, I certify that this action (1) is not a ''significant regulatory action'' under Executive Order 12866; (2) is not a ''significant rule'' under DOT Regulatory Policies and Procedures (44 FR 11034, February 26, 1979); and (3) will not have a significant economic impact, positive or negative, on a substantial number of small entities under the criteria of the Regulatory Flexibility Act. A copy of the final evaluation prepared for this action is contained in the Rules Docket. A copy of it may be obtained by contacting the Rules Docket at the location provided under the caption **ADDRESSES**.

List of Subjects in 14 CFR Part 39

Air transportation, Aircraft, Aviation safety, Safety.

Adoption of the Amendment

Accordingly, pursuant to the authority delegated to me by the Administrator, the Federal Aviation Administration amends part 39 of the Federal Aviation Regulations (14 CFR part 39) as follows:

PART 39—AIRWORTHINESS DIRECTIVES

1. The authority citation for part 39 continues to read as follows:

Authority: 49 USC 106(g), 40113, 44701.

§ 39.13 [Amended]

2. Section 39.13 is amended by removing Airworthiness Directive (AD) 95–20–07, Amendment 39–9386, and by adding a new AD to read as follows:

97–01–01 The New Piper Aircraft, Inc.: Amendment 39–9782; Docket No. 96–CE–09–AD. Supersedes AD 95–20–07, Amendment 39–9386.

Applicability: The following airplane models and serial numbers, certificated in any category:

1. All serial numbers of Models PA24, PA24–250, PA24–260, PA24–400, PA30, and PA39 airplanes;

2. The following model and serial number airplanes that are not equipped with a Piper part number (P/N) 78717–02 main landing gear sidebrace stud in both right and left main landing gear sidebrace bracket assemblies:

Model	Serial Nos.
PA28R–180 ..	28R–30002 through 28R–31135, and 28R–7130001 through 28R–7130013.
PA28R–200 ..	28R–35001 through 28R–35820, and 28R–7135001 through 28R–7635539.
PA28R–201 ..	28R–7737002 through 28R–7737096.
PA28R–201T	28R–7703001 through 28R–7703239.
PA32R–300 ..	32R–7680001 through 32R–7780444.
PA34–200	all serial numbers.
PA34–200T ..	34–7570001 through 34–7770372.

Note 1: P/N 78717–02 sidebrace stud was installed at manufacture on Piper Model PA34–200T airplanes, serial numbers 34–7670325 through 34–7770372.

Note 2: This AD applies to each airplane identified in the preceding applicability provision, regardless of whether it has been modified, altered, or repaired in the area subject to the requirements of this AD. For airplanes that have been modified, altered, or repaired so that the performance of the requirements of this AD is affected, the owner/operator must request approval for an alternative method of compliance in accordance with paragraph (e) of this AD. The request should include an assessment of the effect of the modification, alteration, or repair on the unsafe condition addressed by this AD; and, if the unsafe condition has not been eliminated, the request should include specific proposed actions to address it.

Compliance: Required initially as follows, and thereafter as specified in the body of this AD:

1. For the affected Models PA28R–180, PA28R–200, PA28R–201, PA28R–201T, PA32R–300, PA34–200, and PA34–200T

airplanes: Within the next 100 hours time-in-service (TIS) after the effective date of this AD or, if the main gear sidebrace stud has already been inspected or replaced as specified in this AD, within 500 hours TIS after the last inspection or replacement, whichever occurs later.

2. For the affected Models PA24, PA24–250, PA24–260, PA24–400, PA30, and PA39 airplanes: Within the next 100 hours TIS after the effective date of this AD or, if the main gear sidebrace stud has already been inspected or replaced as specified in this AD, within 1,000 hours TIS after the last inspection or replacement, whichever occurs later.

To prevent main landing gear (MLG) collapse caused by main gear sidebrace stud cracks, which could result in loss of control of the airplane during landing operations, accomplish the following:

Note 3: The paragraph structure of this AD is as follows:

Level 1: (a), (b), (c), etc.
Level 2: (1), (2), (3), etc.
Level 3: (i), (ii), (iii), etc.

Level 2 and Level 3 structures are designations of the Level 1 paragraph they immediately follow.

(a) Remove both the left and right main gear sidebrace studs from the airplane in accordance with the instructions contained in the Landing Gear section of the maintenance manual, and inspect each main gear sidebrace stud for cracks, using Type I (fluorescent) liquid penetrant or magnetic particle inspection methods. Figure 1 of this AD depicts the area of the sidebrace stud shank where the sidebrace stud is to be inspected.

Note 4: All affected Models PA24 and PA24–250 airplanes were equipped at manufacture with P/N 20829–00 main gear sidebrace studs. All affected Models PA24–260, PA24–400, PA30, and PA39 airplanes were equipped at manufacture with P/N 22512–00 main gear sidebrace studs. The Appendix included with this AD contains information on determining the P/N of the bracket assembly (which contains the main gear side brace stud) on the affected PA28R, PA32R, and PA34 series airplanes.

BILLING CODE 4910–13–U

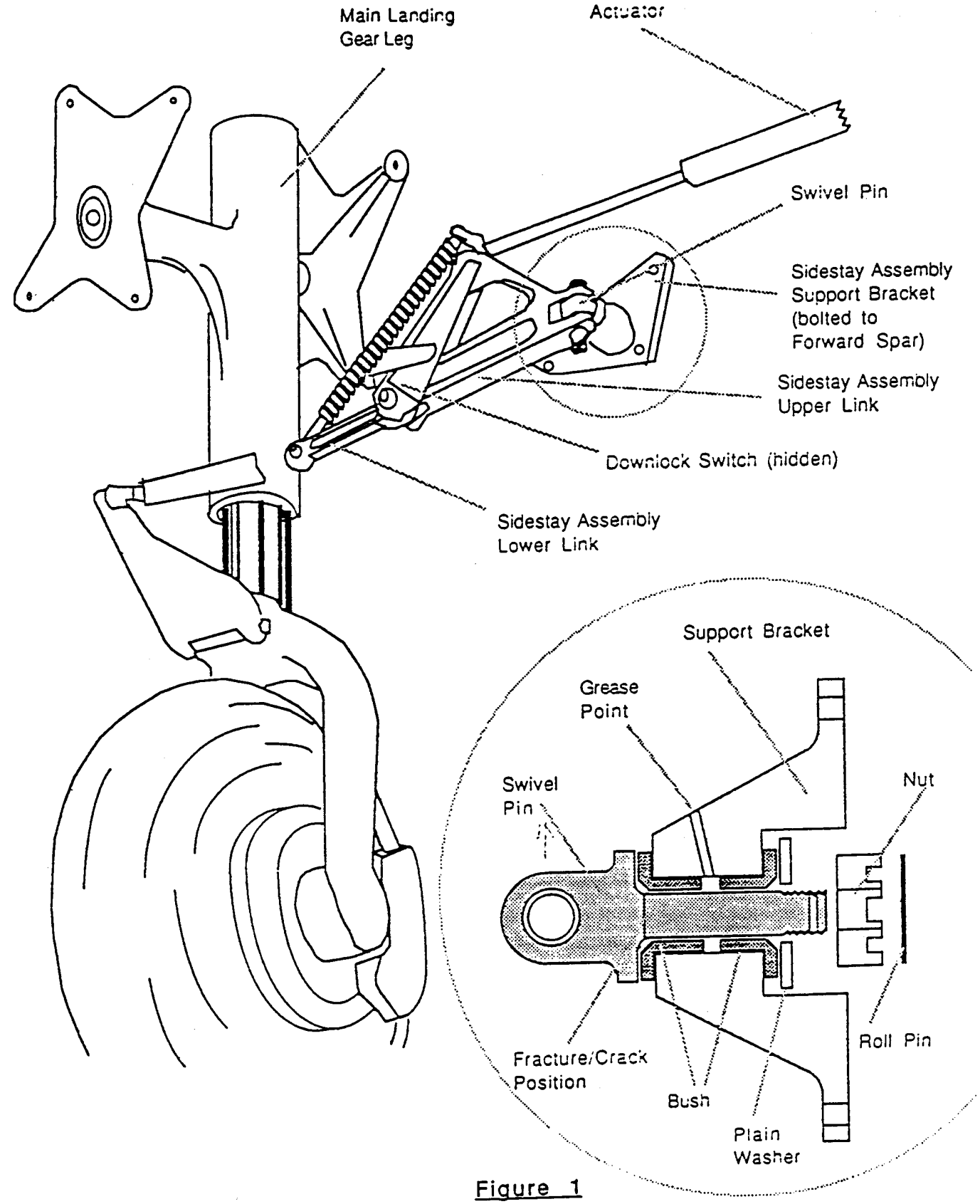

Figure 1

BILLING CODE 4910–13–C

(1) For any main gear sidebrace stud found cracked, prior to further flight, replace the cracked stud with an FAA-approved serviceable part (part numbers referenced in the table in paragraph (b) of this AD or FAA-approved equivalent) in accordance with the instructions contained in the Landing Gear section of the applicable maintenance manual, and accomplish one of the following, as applicable:

(i) Reinspect and replace (as necessary) as specified in paragraph (b) of this AD; or

(ii) For the affected Models PA28R–180, PA28R–200, PA28R–201, PA28R–201T, PA32R–300, PA34–200, and PA34–200T airplanes, the P/N 95299–00 or 95299–02 main gear sidebrace studs are no longer manufactured. Install a new main gear sidebrace stud bracket assembly, P/N 95643–06, P/N 95643–07, P/N 95643–08, or P/N 95643–09, as applicable. No repetitive inspections will be required by this AD for these affected airplane models when this bracket assembly is installed; or

(iii) For the affected Models PA28R–180, PA28R–200, PA28R–201, PA28R–201T, PA32R–300, PA34–200, and PA34–200T airplanes, ream the existing two-piece bushings, P/N 67026–6, to an inside diameter of .624-inch to .625-inch, chamfer the head side of the bushing to accommodate the radius in the shank of the main gear sidebrace stud, and install the 5/8-inch stud, P/N 78717–02. No repetitive inspections will be required by this AD when this action is accomplished. If the bushings cannot be reamed while installed in the bracket (i.e., the bushings are loose), then install a main gear sidebrace bracket assembly, P/N 95643–06, P/N 95643–07, P/N 95643–08, or P/N 95643–09, as applicable. No repetitive inspections will be required by this AD when this bracket assembly is installed.

(2) For any main gear sidebrace stud not found cracked, prior to further flight, reinstall the uncracked stud in accordance with the instructions contained in the Landing Gear section of the applicable maintenance manual, and reinspect and replace (as necessary) as specified in paragraph (b) of this AD.

(b) Reinspect both the left and right main gear sidebrace studs, using Type I (fluorescent) liquid penetrant or magnetic particle inspection methods. Replace any cracked stud or reinstall any uncracked stud as specified in paragraphs (a)(1) and (a)(2) of this AD, respectively:

Part No. installed	TIS inspection interval (hours)	Model airplanes installed on
20829–00 (Piper parts) or FAA-approved equivalent	1,000	PA24 and PA24–250.
22512–00 (Piper parts) or FAA-approved equivalent	1,000	PA24–260, PA24–400, PA30, and PA39.
95299–00 or 95299–02 (Piper parts) or FAA-approved equivalent	500	PA28R–180, PA28R–200, PA28R–201, PA28R–201T, PA32R–300, PA34-200, and PA34–200T.

Note 5: Accomplishing the actions of this AD does not affect the requirements of AD 77–13–21, Amendment 39–3093. The tolerance inspection requirements of that AD still apply for Piper PA24, PA30, and PA39 series airplanes.

(c) Owners/operators of the affected Models PA28R–180, PA28R–200, PA28R–201, PA28R–201T, PA32R–300, PA34–200, and PA34–200T airplanes may accomplish one of the following at any time to terminate the repetitive inspection requirement of this AD:

(1) Install a main gear sidebrace bracket assembly, P/N 95643–06, P/N 95643–07, P/N 95643–08, or P/N 95643–09, as applicable, which contains the 5/8-inch diameter main gear sidebrace stud, P/N 78717–02, and the one-piece bushing, P/N 67026–12; or

(2) Ream the existing two-piece bushings, P/N 67026–6, to an inside diameter of .624-inch to .625-inch, chamfer the head side of the bushing to accommodate the radius in the shank of the main gear sidebrace stud, and install the 5/8-inch stud, P/N 78717–02. If the bushings cannot be reamed while installed in the bracket (i.e., the bushings are loose), then install a main gear sidebrace bracket assembly, P/N 95643–06, P/N 95643–07, P/N 95643–08, or P/N 95643–09, as applicable.

(d) Special flight permits may be issued in accordance with sections 21.197 and 21.199 of the Federal Aviation Regulations (14 CFR 21.197 and 21.199) to operate the airplane to a location where the requirements of this AD can be accomplished.

(e) An alternative method of compliance or adjustment of the initial or repetitive compliance times that provides an equivalent level of safety may be approved by the Manager, Atlanta Aircraft Certification Office (ACO), Campus Building, 1701 Columbia Avenue, Suite 2–160, College Park, Georgia 30337–2748. The request shall be forwarded through an appropriate FAA Maintenance Inspector, who may add comments and then send it to the Manager, Atlanta ACO. Alternative methods of compliance approved in accordance with AD 95–20–07, Amendment 39–9386, are considered approved as alternative methods of compliance with this AD.

Note 6: Information concerning the existence of approved alternative methods of compliance with this AD, if any, may be obtained from the Atlanta ACO.

(f) Information related to this AD may be inspected at the FAA, Central Region, Office of the Assistant Chief Counsel, Room 1558, 601 E. 12th Street, Kansas City, Missouri.

(g) This amendment supersedes AD 95–20–07, Amendment 39–9386.

(h) This amendment (39–9782) becomes effective on February 7, 1997.

Appendix to AD 97–01–01 Information To Determine Main Gear Sidebrace Stud Assembly Part Number (P/N)

—The P/N 95643–00/-01/-02/-03 bracket assembly contains the 9/16-inch diameter main gear sidebrace stud, P/N 95299–00/-02, and a two-piece bushing, P/N 67026–6.

—The P/N 95643–06/-07/-08/-09 bracket assembly contains the 5/8-inch diameter main gear sidebrace stud, P/N 78717–02, and a one-piece bushing, P/N 67026- 12.

—Both the one-piece and the two-piece bushing have a visible portion of the bushing flange, i.e., bushing shoulder.

—Whether a one-piece or two-piece bushing is installed may be determined by measuring the outside diameter of the bushing flange with a micrometer (jaws of the caliper must be 3/32-inch or less). The two- piece bushing will have an outside diameter of 1.00 inch and the one-piece bushing will have an outside diameter of 1.128 to 1.130 inches. This measurement is not valid for the following airplanes:

Model	Serial Nos.
PA28R–180 ..	28R–30004 through 28–31270.
PA28R–200 ..	28R–35001 through 28R–35820, and 28R–7135001 through 28R–7135062.

The main gear sidebrace studs on these airplanes will require removal to determine the P/N installed.

—The one-piece bushing contains a visible chamfer in the center of the bushing, and the chamfer in the two-piece bushing is not visible when the stud is installed.

—If P/N 95643–00/–01/–02/–03 bracket assembly is installed or the above information cannot be utilized, the main gear sidebrace stud will need to be removed from the bracket to determine the shank diameter and main gear sidebrace stud P/N.

—P/N 95299–00 and P/N 95299–02 main gear sidebrace studs are 9/16-inch in diameter.

—P/N 78717–00 main gear sidebrace studs are 5/8-inch in diameter.

—P/N 95643–00/–01/–02/–03 bracket assembly may have been modified to accommodate the 5/8-inch diameter main gear sidebrace stud, P/N 78717–02.

—The embossed number of 95363 on the bracket forging is not the bracket assembly P/N.

Issued in Kansas City, Missouri, on December 23, 1996.

Michael Gallagher,

Manager, Small Airplane Directorate, Aircraft Certification Service.

[FR Doc. 96–33231 Filed 12–31–96; 8:45 am]

BILLING CODE 4910–13–U

---

14 CFR Part 39

[Docket No. 96–NM–266–AD; Amendment 39–9871; AD 96–26–07]

RIN 2120–AA64

Airworthiness Directives; Boeing Model 737 Series Airplanes

AGENCY: Federal Aviation Administration, DOT.

ACTION: Final rule; request for comments.

SUMMARY: This amendment adopts a new airworthiness directive (AD) that is applicable to all Boeing Model 737 series airplanes. This action requires revising the FAA-approved Airplane Flight Manual (AFM) to include procedures that will enable the flight crew to take appropriate action to maintain control of the airplane during an uncommanded yaw or roll condition, and to correct a jammed or restricted flight control condition. This amendment is prompted by an FAA determination that such procedures currently are not defined adequately in the AFM for these airplanes. The actions specified in this AD are intended to ensure that the flight crew is advised of the potential hazard associated with a jammed or restricted flight control condition and of the procedures necessary to address it.

DATES: Effective January 17, 1997.

Comments for inclusion in the Rules Docket must be received on or before March 3, 1997.

ADDRESSES: Submit comments in triplicate to the Federal Aviation Administration (FAA), Transport Airplane Directorate, ANM–103, Attention: Rules Docket No. 96–NM–266–AD, 1601 Lind Avenue, SW., Renton, Washington 98055–4056.

The information concerning this amendment may be obtained from or examined at the FAA, Transport Airplane Directorate, 1601 Lind Avenue, SW., Renton, Washington.

FOR FURTHER INFORMATION CONTACT: Les Berven, Flight Test Pilot, Flight Test Branch, ANM–160S, Seattle Aircraft Certification Office, FAA, Transport Airplane Directorate, 1601 Lind Avenue, SW., Renton, Washington 98055–4056; telephone (206) 227–2666; fax (206) 227–1181.

SUPPLEMENTARY INFORMATION: As part of its Continuing Operational Safety Program, the FAA has become aware of new information related to the safety of Boeing Model 737 series airplanes. Recent tests of the main rudder power control unit (PCU), conducted at Boeing, demonstrated a potential failure scenario that was previously unknown. These tests revealed that, if the secondary slide of the PCU jams in certain positions, rudder pedal input can cause deformation in the linkage leading to the primary and secondary slides of the servo valve of the main rudder PCU. This situation could result in rudder deflection in the opposite direction of the rudder command, and a jammed rudder.

Other Relevant Rulemaking

The conditions described previously were addressed previously in AD 96–23–51, amendment 39–9818 (61 FR 59317, November 22, 1996), which is applicable to all Boeing Model 737 series airplanes. That AD requires repetitive tests to verify proper operation of the rudder power control unit (PCU), and replacement of the PCU, if necessary. The actions specified by that AD are intended to prevent rudder motion in the opposite direction of the rudder command.

FAA's Findings

As a result of analysis related to the previously prescribed tests, the FAA finds that certain procedures should be included in the FAA-approved Airplane Flight Manual (AFM) for Model 737 series airplanes to enable the flight crew to take appropriate action to maintain control of the airplane during an uncommanded yaw or roll condition, and to correct a jammed or restricted flight control condition. The FAA has determined that such procedures currently are not defined adequately in the AFM for these airplanes.

Explanation of the Requirements of the Rule

Since an unsafe condition has been identified that is likely to exist or develop on other Boeing Model 737 series airplanes of the same type design, this AD is being issued to ensure that the flight crew is advised of the potential hazard associated with a jammed or restricted flight control condition and of the procedures necessary to address it. This AD requires revising the AFM to include procedures that will enable the flight crew to take appropriate action to maintain control of the airplane during an uncommanded yaw or roll condition, and to correct a jammed or restricted flight control condition.

Determination of Rule's Effective Date

Since a situation exists that requires the immediate adoption of this regulation, it is found that notice and opportunity for prior public comment hereon are impracticable, and that good cause exists for making this amendment effective in less than 30 days.

Comments Invited

Although this action is in the form of a final rule that involves requirements affecting flight safety and, thus, was not preceded by notice and an opportunity for public comment, comments are invited on this rule. Interested persons are invited to comment on this rule by submitting such written data, views, or arguments as they may desire. Communications shall identify the Rules Docket number and be submitted in triplicate to the address specified under the caption **ADDRESSES.** All communications received on or before the closing date for comments will be considered, and this rule may be amended in light of the comments received. Factual information that supports the commenter's ideas and suggestions is extremely helpful in evaluating the effectiveness of the AD action and determining whether additional rulemaking action would be needed.

Comments are specifically invited on the overall regulatory, economic, environmental, and energy aspects of the rule that might suggest a need to modify the rule. All comments submitted will be available, both before and after the closing date for comments, in the Rules Docket for examination by interested persons. A report that summarizes each FAA-public contact concerned with the substance of this AD will be filed in the Rules Docket.

Commenters wishing the FAA to acknowledge receipt of their comments submitted in response to this rule must submit a self-addressed, stamped postcard on which the following statement is made: ''Comments to Docket Number 96–NM–266–AD.'' The postcard will be date stamped and returned to the commenter.

Regulatory Impact

The regulations adopted herein will not have substantial direct effects on the States, on the relationship between the national government and the States, or on the distribution of power and responsibilities among the various levels of government. Therefore, in accordance with Executive Order 12612, it is determined that this final rule does

not have sufficient federalism implications to warrant the preparation of a Federalism Assessment.

The FAA has determined that this regulation is an emergency regulation that must be issued immediately to correct an unsafe condition in aircraft, and that it is not a ''significant regulatory action'' under Executive Order 12866. It has been determined further that this action involves an emergency regulation under DOT Regulatory Policies and Procedures (44 FR 11034, February 26, 1979). If it is determined that this emergency regulation otherwise would be significant under DOT Regulatory Policies and Procedures, a final regulatory evaluation will be prepared and placed in the Rules Docket. A copy of it, if filed, may be obtained from the Rules Docket at the location provided under the caption **ADDRESSES.**

List of Subjects in 14 CFR Part 39

Air transportation, Aircraft, Aviation safety, Safety.

Adoption of the Amendment

Accordingly, pursuant to the authority delegated to me by the Administrator, the Federal Aviation Administration amends part 39 of the Federal Aviation Regulations (14 CFR part 39) as follows:

PART 39—AIRWORTHINESS DIRECTIVES

1. The authority citation for part 39 continues to read as follows:

Authority: 49 U.S.C. 106(g), 40113, 44701.

§ 39.13 [Amended]

2. Section 39.13 is amended by adding the following new airworthiness directive:

96–26–07 BOEING: Amendment 39–9871. Docket 96–NM–266–AD.

Applicability: All Model 737 series airplanes, certificated in any category.

Note 1: This AD applies to each airplane identified in the preceding applicability provision, regardless of whether it has been modified, altered, or repaired in the area subject to the requirements of this AD. For airplanes that have been modified, altered, or repaired so that the performance of the requirements of this AD is affected, the owner/operator must request approval for an alternative method of compliance in accordance with paragraph (b) of this AD. The request should include an assessment of the effect of the modification, alteration, or repair on the unsafe condition addressed by this AD; and, if the unsafe condition has not been eliminated, the request should include specific proposed actions to address it.

Compliance: Required as indicated, unless accomplished previously.

To ensure that the flight crew is advised of the potential hazard associated with jammed or restricted flight controls and of the procedures necessary to address it, accomplish the following:

(a) Within 30 days after the effective date of this AD, accomplish paragraphs (a)(1) and (a)(2) of this AD.

(1) Revise the Emergency Procedures Section of the FAA-approved Airplane Flight Manual (AFM) to include the following recall item, which will enable the flight crew to take appropriate action to maintain control of the airplane during an uncommanded yaw or roll condition. This may be accomplished by inserting a copy of this AD in the AFM.

''UNCOMMANDED YAW OR ROLL

RECALL

Maintain control of the airplane with all available flight controls. If roll is uncontrollable, immediately reduce angle of attack and increase airspeed. Do not attempt to maintain altitude until control is recovered. If engaged, disconnect autopilot and autothrottle.''

(2) Revise the section entitled ''JAMMED FLIGHT CONTROLS'' of the Normal Procedures Section (for Model 737–100 and –200 series airplanes) or the Non-Normal Procedures Section (for Model 737–300, –400, and –500 series airplanes), as applicable, of the FAA-approved AFM to include the following procedures, which will enable the flight crew to take appropriate action to maintain control of the airplane and to correct a jammed or restricted flight control condition. This may be accomplished by inserting a copy of this AD in the AFM.

''JAMMED FLIGHT CONTROLS

JAMMED OR RESTRICTED ELEVATOR OR AILERON:

In the event of a jammed elevator or aileron, do not hesitate to apply additional force to maintain control of the airplane. Do not turn off any flight control switches unless the faulty control is positively identified. Manual trim may be used to offload control forces.

JAMMED OR RESTRICTED RUDDER:

If the rudder pedals will not move to the pilot commanded position, or if the pedals are deflected in one direction and jammed, maintain control of the airplane with all available flight controls. Disengage the autopilot and autothrottle. Use maximum force (combined effort by both pilots) to overpower the rudder system.

After establishing control of the aircraft, check rudder pedal position. If the rudder pedals have centered, accomplish a normal descent, approach, and landing. If the rudder pedals remain jammed and are deflected to a degree that significantly affects the controllability of the airplane, select System B flight control switch to STBY RUD. If this action clears the jam/deflection, make a normal approach and landing, noting that rudder control may be limited. If moving the System B flight control switch to STBY RUD does not clear the jam, select System A flight control switch to off. If pedals do not center, select System B flight control switch to off. Make approach and landing with flaps 15 at V_{REF} flaps 15. The crosswind capability of the airplane will be greatly reduced.

YAW DAMPER:

The yaw damper is a separate control and provides a limited rudder movement in opposition to the yaw rate of the airplane. Rudder (yaw damper) indicator displacement indicates yaw damper operation. Yaw damper light illuminates amber when the yaw damper is not engaged.

(b) An alternative method of compliance or adjustment of the compliance time that provides an acceptable level of safety may be used if approved by the Manager, Seattle Aircraft Certification Office (ACO), FAA, Transport Airplane Directorate. Operators shall submit their requests through an appropriate FAA Principal Operations Inspector, who may add comments and then send it to the Manager, Seattle ACO.

Note 2: Information concerning the existence of approved alternative methods of compliance with this AD, if any, may be obtained from the Seattle ACO.

(c) Special flight permits may be issued in accordance with sections 21.197 and 21.199 of the Federal Aviation Regulations (14 CFR 21.197 and 21.199) to operate the airplane to a location where the requirements of this AD can be accomplished.

(d) This amendment becomes effective on January 17, 1997.

Issued in Renton, Washington, on December 23, 1996.

S.R. Miller,

Acting Manager, Transport Airplane Directorate, Aircraft Certification Service.

[FR Doc. 96–33104 Filed 12–30–96; 10:25 am]

BILLING CODE 4910–13–U

Office of the Secretary

14 CFR Part 382

49 CFR Part 27

[Docket No. 46872 and 45657]

RIN 2105–AB62

Nondiscrimination on the Basis of Handicap in Programs and Activities Receiving or Benefiting From Federal Financial Assistance; Nondiscrimination on the Basis of Handicap in Air travel

AGENCY: Office of the Secretary, Department of Transportation (DOT).

ACTION: Correction to final regulations.

SUMMARY: On November 1, 1996, the Department of Transportation published final rules amending its regulations implementing Air Carrier Access Act and section 504 of the Rehabilitation Act. This document corrects certain editorial errors in that document. The

corrections do not affect the substance of the ammendments.

EFFECTIVE DATE: January 2, 1997.

FOR FURTHER INFORMATION CONTACT: Robert C. Ashby, Deputy Assistant General Counsel for Regulation and Enforcement, Department of Transportation, 400 7th Street, S.W., Room 10424, Washington, D.C., 20590. (202) 366–9306 (voice); (202) 755–7687 (TDD)

SUPPLEMENTARY INFORMATION:

Background

The Department is making editorial corrections to its November 1, 1996, final rule (61 FR 56409), amending 49 CFR parts 27 and 14 CFR part 382, which implement section 504 of the Rehabilitation Act and the Air Carrier Access Act. The final rule concerned such subjects as lifts for small commuter aircraft, airport terminal accessibility, and passengers with communicable diseases.

Need for Correction

As published, the document contains errors which may prove to be misleading and are in need of correction. First, the title of an amendment to the Air Carrier Access Act regulation's ''Provision of services and equipment'' section is misnumbered (61 FR 56422). It reads ''§ 382.49''; it should read ''§ 382.39.'' Second, in the amendment to § 382.39(a)(2) (61 FR 56423), the word ''commuter'' in the final sentence is unnecessary and may be confusing, and should be deleted. In the same sentence, the words ''fewer than 30'' should be changed to ''30 or fewer.'' Third, in the amendment to the section 504 rule (61 FR 56424), § 27.72(c)(2) inadvertantly included the word ''rule'' in three places, and we are deleting it.

Correction of Publication

Accordingly, the publication on November 1, 1996, of the final regulations amending 14 CFR part 382 and 49 CFR part 27, which were the subject of FR Doc. 96–28084, is corrected as follows:

1. On page 56422, in the third column, following amendatory instruction 4, the title of the amended section is corrected to read as follows:

§ 382.39 Provision of services and equipment.

2. On page 56423, in the first column, the last sentence of the amended § 382.39(a)(2) is corrected by removing the word ''commuter'' and changing the words ''fewer than 30'' to ''30 or fewer.''

3. On page 56424, in the third column, the first sentence of new § 27.72(c)(2) is corrected by removing the word ''rule'' in three places: after the words ''December 2, 1998'', after the words ''December 2, 1999'', and after the words ''December 4, 2000.''

Robert C. Ashby,

Deputy Assistant General Counsel for Regulation and Enforcement.

[FR Doc. 96–33339 Filed 12–31–96; 8:45 am]

BILLING CODE 4910–62–P

DEPARTMENT OF THE TREASURY

Internal Revenue Service

26 CFR Part 1

[TD 8704]

RIN 1545–AR31

Definition of Foreign Base Company Income and Foreign Personal Holding Company Income of a Controlled Foreign Corporation

AGENCY: Internal Revenue Service (IRS), Treasury.

ACTION: Final regulations.

SUMMARY: This document contains final regulations relating to the definitions of subpart F income and foreign personal holding company income of a controlled foreign corporation and the allocation of deficits for purposes of computing the deemed-paid foreign tax credit. These regulations are necessary to provide guidance that coordinates with previously published guidance under section 954. These regulations will affect United States shareholders of controlled foreign corporations.

DATES: These regulations are effective January 2, 1997.

For specific dates of applicability, see §§ 1.952–1(f)(5), 1.952–2(c)(1), 1.954–2(b)(3) and 1.960–1(i)(6).

FOR FURTHER INFORMATION CONTACT: Valerie Mark, (202) 622–3840 (not a toll-free call).

SUPPLEMENTARY INFORMATION:

Background

On September 7, 1995, proposed regulations (IL–75–92) amending the Income Tax Regulations (26 CFR Part 1) under sections 952, 954(c) and 960 of the Internal Revenue Code (Code) were published in the Federal Register (60 FR 46548). In final regulations under section 954 (TD 8618), also published on that date (60 FR 46500), a provision relating to the treatment of tax-exempt interest under the foreign personal holding company income rules was reserved. The proposed regulations provided rules for the treatment of tax-exempt interest and also provided guidance under sections 952 and 960 to coordinate with the final regulations. No public hearing was requested or held. One written comment was received on the proposed regulations. After consideration of this comment, the proposed regulations are adopted as final regulations without amendment.

Explanation of Provisions

Sections 1.952–1(e) and (f) and 1.960–1(i)

Sections 1.952–1(e) and (f) and 1.960–1(i) are unchanged from the proposed regulations.

Sections 1.952–2(c)(1) and 1.954–2(b)(3)

Under § 1.954–2T(b)(6), interest income that was exempt from tax under section 103 was included in the foreign personal holding company income of the controlled foreign corporation. However, the net foreign base company income that was attributable to tax-exempt interest was treated as tax-exempt interest in the hands of the United States shareholder upon a deemed distribution under subpart F and therefore excluded for regular tax purposes but potentially subject to the alternative minimum tax. Section 1.954–2(b)(3), as proposed and finalized, amends the rule in the temporary regulations to provide that foreign personal holding company income includes interest income that is exempt from tax under section 103. The tax-exempt interest would not retain its character as such in the hands of the United States shareholder upon a deemed distribution under subpart F. As a result of the treatment of tax-exempt interest in these final regulations, Rev. Rul. 72–527 (1972–2 C.B. 456) is obsoleted.

A commentator argued that treatment of tax-exempt interest in the proposed regulations was contrary to section 103. This comment was rejected. The Code does not specifically address how section 103 applies in the context of subpart F. Although § 1.952–2 provides that, in general, U.S. tax principles apply in computing subpart F income, this regulation makes certain Code provisions inapplicable when necessary to serve the purposes of subpart F. See § 1.952–2(c)(1).

Section 1.954–1(d)(4)(iii)

The example in § 1.954–1(d)(4)(iii) is amended to correct a mathematical error.

Section 1.954–2(g)(2)

The regulations are amended to clarify that income derived in the trade or business of trading foreign currency

is not excluded from foreign personal holding company income under the business needs exception. A technical correction is made to § 1.954–2(g)(2)(ii)(B)(*2*).

Section 1.957–1(c)

Technical corrections are made to § 1.957–1(c) *Examples 8* and *9*.

Special Analyses

It has been determined that this Treasury decision is not a significant regulatory action as defined in EO 12866. Therefore, a regulatory assessment is not required. It has also been determined that section 553(b) of the Administrative Procedure Act (5 U.S.C. chapter 5) does not apply to these regulations, and because these regulations do not impose a collection of information on small entities, the Regulatory Flexibility Act (5 U.S.C. chapter 6) does not apply. Pursuant to section 7805(f) of the Internal Revenue Code, the notice of proposed rulemaking preceding these regulations was submitted to the Chief Counsel for Advocacy of the Small Business Administration for comment on its impact on small business.

Drafting Information

The principal authors of these regulations are Barbara Felker and Valerie Mark of the Office of the Associate Chief Counsel (International), IRS. However, other personnel from the IRS and Treasury Department participated in their development.

List of Subjects in 26 CFR Part 1

Income taxes, Reporting and recordkeeping requirements.

Adoption of Amendments to the Regulations

Accordingly, 26 CFR part 1 is amended as follows:

PART 1—INCOME TAXES

Paragraph 1. The authority citation for part 1 is amended by adding an entry in numerical order to read as follows:

Authority: 26 U.S.C. 7805. * * *

Section 1.960–1 also issued under 26 U.S.C. 960(a). * * *

Par. 2. Section 1.952–1 is amended by adding paragraphs (e) and (f) to read as follows:

§ 1.952–1 Subpart F income defined.

* * * * *

(e) *Application of current earnings and profits limitation*—(1) *In general.* If the subpart F income (as defined in section 952(a)) of a controlled foreign corporation exceeds the foreign corporation's earnings and profits for the taxable year, the subpart F income includible in the income of the corporation's United States shareholders is reduced under section 952(c)(1)(A) in accordance with the following rules. The excess of subpart F income over current year earnings and profits shall—

(i) First, proportionately reduce subpart F income in each separate category of the controlled foreign corporation, as defined in § 1.904–5(a)(1), in which current earnings and profits are zero or less than zero;

(ii) Second, proportionately reduce subpart F income in each separate category in which subpart F income exceeds current earnings and profits; and

(iii) Third, proportionately reduce subpart F income in other separate categories.

(2) *Allocation to a category of subpart F income.* An excess amount that is allocated under paragraph (e)(1) of this section to a separate category must be further allocated to a category of subpart F income if the separate category contains more than one category of subpart F income described in section 952(a) or, in the case of foreign base company income, described in § 1.954–1(c)(1)(iii)(A) (*1*) or (*2*). In such case, the excess amount that is allocated to the separate category must be allocated to the various categories of subpart F income within that separate category on a proportionate basis.

(3) *Recapture of subpart F income reduced by operation of earnings and profits limitation.* Any amount in a category of subpart F income described in section 952(a) or, in the case of foreign base company income, described in § 1.954–1(c)(1)(iii)(A) (*1*) or (*2*) that is reduced by operation of the current year earnings and profits limitation of section 952(c)(1)(A) and this paragraph (e) shall be subject to recapture in a subsequent year under the rules of section 952(c)(2) and paragraph (f) of this section.

(4) *Coordination with sections 953 and 954.* The rules of this paragraph (e) shall be applied after the application of sections 953 and 954 and the regulations under those sections, except as provided in § 1.954–1(d)(4)(ii).

(5) *Earnings and deficits retain separate limitation character.* The income reduction rules of paragraph (e)(1) of this section shall apply only for purposes of determining the amount of an inclusion under section 951(a)(1)(A) from each separate category as defined in § 1.904–5(a)(1) and the separate categories in which recapture accounts are established under section 952(c)(2) and paragraph (f) of this section. For rules applicable in computing post-1986 undistributed earnings, see generally section 902 and the regulations under that section. For rules relating to the allocation of deficits for purposes of computing foreign taxes deemed paid under section 960 with respect to an inclusion under section 951(a)(1)(A), see § 1.960–1(i).

(f) *Recapture of subpart F income in subsequent taxable year*—(1) *In general.* If a controlled foreign corporation's subpart F income for a taxable year is reduced under the current year earnings and profits limitation of section 952(c)(1)(A) and paragraph (e) of this section, recapture accounts will be established and subject to recharacterization in any subsequent taxable year to the extent the recapture accounts were not previously recharacterized or distributed, as provided in paragraphs (f) (2) and (3) of this section.

(2) *Rules of recapture*—(i) *Recapture account.* If a category of subpart F income described in section 952(a) or, in the case of foreign base company income, described in § 1.954–1(c)(1)(iii)(A) (*1*) or (*2*) is reduced under the current year earnings and profits limitation of section 952(c)(1)(A) and paragraph (e) of this section for a taxable year, the amount of such reduction shall constitute a recapture account.

(ii) *Recapture.* Each recapture account of the controlled foreign corporation will be recharacterized, on a proportionate basis, as subpart F income in the same separate category (as defined in § 1.904–5(a)(1)) as the recapture account to the extent that current year earnings and profits exceed subpart F income in a taxable year. The United States shareholder must include his pro rata share (determined under the rules of § 1.951–1(e)) of each recharacterized amount in income as subpart F income in such separate category for the taxable year.

(iii) *Reduction of recapture account and corresponding earnings.* Each recapture account, and post-1986 undistributed earnings in the separate category containing the recapture account, will be reduced in any taxable year by the amount which is recharacterized under paragraph (f)(2)(ii) of this section. In addition, each recapture account, and post-1986 undistributed earnings in the separate category containing the recapture account, will be reduced in the amount of any distribution out of that account (as determined under the ordering rules of section 959(c) and paragraph (f)(3)(ii) of this section).

(3) *Distribution ordering rules*—(i) *Coordination of recapture and*

distribution rules. If a controlled foreign corporation distributes an amount out of earnings and profits described in section 959(c)(3) in a year in which current year earnings and profits exceed subpart F income and there is an amount in a recapture account for such year, the recapture rules will apply first.

(ii) *Distributions reduce recapture accounts first.* Any distribution made by a controlled foreign corporation out of earnings and profits described in section 959(c)(3) shall be treated as made first on a proportionate basis out of the recapture accounts in each separate category to the extent thereof (even if the amount in the recapture account exceeds post-1986 undistributed earnings in the separate category containing the recapture account). Any remaining distribution shall be treated as made on a proportionate basis out of the remaining earnings and profits of the controlled foreign corporation in each separate category. See section 904(d)(3)(D).

(4) *Examples.* The application of paragraphs (e) and (f) of this section may be illustrated by the following examples:

Example 1. (i) A, a U.S. person, is the sole shareholder of CFC, a controlled foreign corporation formed on January 1, 1998, whose functional currency is the u. In 1998, CFC earns 100u of foreign base company sales income that is general limitation income described in section 904(d)(1)(I) and incurs a (200u) loss attributable to activities that would have produced general limitation income that is not subpart F income. In 1998 CFC also earns 100u of foreign personal holding company income that is passive income described in section 904(d)(1)(A), and 100u of foreign personal holding company income that is dividend income subject to a separate limitation described in section 904(d)(1)(E) for dividends from a noncontrolled section 902 corporation. CFC's subpart F income for 1998, 300u, exceeds CFC's current earnings and profits, 100u, by 200u. Under section 952(c)(1)(A) and paragraph (e) of this section, subpart F income is limited to CFC's current earnings and profits of 100u, all of which is included in A's gross income under section 951(a)(1)(A). The 200u of CFC's 1998 subpart F income that is not included in A's income in 1998 by reason of section 952(c)(1)(A) is subject to recapture under section 952(c)(2) and paragraph (f) of this section.

(ii) For purposes of determining the amount and type of income included in A's gross income and the amount and type of income in CFC's recapture account, the rules of paragraphs (e) (1) and (2) of this section apply. Under paragraph (e)(1)(i) of this section, the amount by which CFC's subpart F income exceeds its earnings and profits for 1998, 200u, first reduces from 100u to 0 CFC's subpart F income in the general limitation category, which has a current year deficit of (100u) in earnings and profits. Next, under paragraph (e)(1)(iii) of this section, the remaining 100u by which CFC's 1998 subpart F income exceeds earnings and profits is applied proportionately to reduce CFC's subpart F income in the separate categories for passive income (100u) and dividends from the noncontrolled section 902 corporation (100u). Thus, A includes 50u of passive limitation/foreign personal holding company income and 50u of dividends from the noncontrolled section 902 corporation/foreign personal holding company income in gross income in 1998. CFC has 100u in its general limitation/foreign base company sales income recapture account attributable to the 100u of foreign base company sales income that is not included in A's income by reason of the earnings and profits limitation of section 952(c)(1)(A). CFC also has 50u in its passive limitation recapture account, all of which is attributable to foreign personal holding company income, and 50u in its recapture account for dividends from the noncontrolled section 902 corporation, all of which is attributable to foreign personal holding company income.

(iii) For purposes of computing post-1986 undistributed earnings, the rules of sections 902 and 960, including the rules of § 1.960–1(i), apply. Under § 1.960–1(i), the general limitation deficit of (100u) is allocated proportionately to reduce passive limitation earnings of 100u and noncontrolled section 902 dividend earnings of 100u. Thus, passive limitation earnings are reduced by 50u to 50u (100u passive limitation earnings/200u total earnings in positive separate categories × (100u) general limitation deficit=50u reduction), and the noncontrolled section 902 corporation earnings are reduced by 50u to 50u (100u noncontrolled section 902 corporation earnings/200u total earnings in positive separate categories × (100u) general limitation deficit=50u reduction). All of CFC's post-1986 foreign income taxes with respect to passive limitation income and dividends from the noncontrolled section 902 corporation are deemed paid by A under section 960 with respect to the subpart F inclusions (50u inclusion/50u earnings in each separate category). After the inclusion and deemed-paid taxes are computed, at the close of 1998 CFC has a (100u) deficit in general limitation earnings (100u subpart F earnings + (200u) nonsubpart F loss), 50u of passive limitation earnings (100u of earnings attributable to foreign personal holding company income − 50u inclusion) with a corresponding passive limitation/foreign personal holding company income recapture account of 50u, and 50u of earnings subject to a separate limitation for dividends from the noncontrolled section 902 corporation (100u earnings − 50u inclusion) with a corresponding noncontrolled section 902 corporation/foreign personal holding company income recapture account of 50u.

Example 2. (i) The facts are the same as in *Example 1* with the addition of the following facts. In 1999, CFC earns 100u of foreign base company sales income that is general limitation income and 100u of foreign personal holding company income that is passive limitation income. In addition, CFC incurs (10u) of expenses that are allocable to its separate limitation for dividends from the noncontrolled section 902 corporation. Thus, CFC's subpart F income for 1999, 200u, exceeds CFC's current earnings and profits, 190u, by 10u. Under section 952(c)(1)(A) and paragraph (e) of this section, subpart F income is limited to CFC's current earnings and profits of 190u, all of which is included in A's gross income under section 951(a)(1)(A).

(ii) For purposes of determining the amount and type of income included in A's gross income and the amount and type of income in CFC's recapture accounts, the rules of paragraphs (e) (1) and (2) of this section apply. While CFC's general limitation post-1986 undistributed earnings for 1999 are 0 ((100u) opening balance + 100u subpart F income), CFC's general limitation subpart F income (100u) does not exceed its general limitation current earnings and profits (100u) for 1999. Accordingly, under paragraph (e)(1)(iii) of this section, the amount by which CFC's subpart F income exceeds its earnings and profits for 1999, 10u, is applied proportionately to reduce CFC's subpart F income in the separate categories for general limitation income, 100u, and passive income, 100u. Thus, A includes 95u of general limitation foreign base company sales income and 95u of passive limitation foreign personal holding company income in gross income in 1999. At the close of 1999 CFC has 105u in its general limitation/foreign base company sales income recapture account (100u from 1998 + 5u from 1999), 55u in its passive limitation/foreign personal holding company income recapture account (50u from 1998 + 5u from 1999), and 50u in its dividends from the noncontrolled section 902 corporation/foreign personal holding company income recapture account (all from 1998).

(iii) For purposes of computing post-1986 undistributed earnings in each separate category, the rules of sections 902 and 960, including the rules of § 1.960–1(i), apply. Thus, post-1986 undistributed earnings (or an accumulated deficit) in each separate category are increased (or reduced) by current earnings and profits or current deficits in each separate category. The accumulated deficit in CFC's general limitation earnings and profits (100u) is reduced to 0 by the addition of 100u of 1999 earnings and profits. CFC's passive limitation earnings of 50u are increased by 100u to 150u, and CFC's noncontrolled section 902 corporation earnings of 50u are decreased by (10u) to 40u. After the addition of current year earnings and profits and deficits to the separate categories there are no deficits remaining in any separate category. Thus, the allocation rules of § 1.960–1(i)(4) do not apply in 1999. Accordingly, in determining the post-1986 foreign income taxes deemed paid by A, post-1986 undistributed earnings in each separate category are unaffected by earnings in the other categories. Foreign taxes deemed paid under section 960 for 1999 would be determined as follows for each separate category: with respect to the inclusion of 95u of foreign base company sales income out of general limitation earnings, the section 960 fraction is 95u inclusion/0 total earnings; with respect to the inclusion of 95u of passive limitation income

the section 960 fraction is 95u inclusion/150u passive earnings. Thus, no general limitation taxes would be associated with the inclusion of the general limitation earnings because there are no accumulated earnings in the general limitation category. After the deemed-paid taxes are computed, at the close of 1999 CFC has a (95u) deficit in general limitation earnings and profits ((100u) opening balance + 100u current earnings −95u inclusion), 55u of passive limitation earnings and profits (50u opening balance + 100u current foreign personal holding company income −95u inclusion), and 40u of earnings and profits subject to the separate limitation for dividends from the noncontrolled section 902 corporation (50u opening balance + (10u) expense).

Example 3. (i) A, a U.S. person, is the sole shareholder of *CFC*, a controlled foreign corporation whose functional currency is the u. At the beginning of 1998, CFC has post-1986 undistributed earnings of 275u, all of which are general limitation earnings described in section 904(d)(1)(I). CFC has no previously-taxed earnings and profits described in section 959(c)(1) or (c)(2). In 1998, CFC has a (200u) loss in the shipping category described in section 904(d)(1)(D), 100u of foreign personal holding company income that is passive income described in section 904(d)(1)(A), and 125u of general limitation manufacturing earnings that are not subpart F income. CFC's subpart F income for 1998, 100u, exceeds CFC's current earnings and profits, 25u, by 75u. Under section 952(c)(1)(A) and paragraph (e) of this section, subpart F income is limited to CFC's current earnings and profits of 25u, all of which is included in A's gross income under section 951(a)(1)(A). The 75u of CFC's 1998 subpart F income that is not included in A's income in 1998 by reason of section 952(c)(1)(A) is subject to recapture under section 952(c)(2) and paragraph (f) of this section.

(ii) For purposes of determining the amount and type of income included in A's gross income and the amount and type of income in CFC's recapture account, the rules of paragraphs (e) (1) and (2) of this section apply. Under paragraph (e)(1) of this section, the amount of CFC's subpart F income in excess of earnings and profits for 1998, 75u, reduces the 100u of passive limitation foreign personal holding company income. Thus, A includes 25u of passive limitation foreign personal holding company income in gross income, and CFC has 75u in its passive limitation/foreign personal holding company income recapture account.

(iii) For purposes of computing post-1986 undistributed earnings in each separate category the rules of sections 902 and 960, including the rules of § 1.960–1(i), apply. Under § 1.960–1(i), the shipping limitation deficit of (200u) is allocated proportionately to reduce general limitation earnings of 400u and passive limitation earnings of 100u. Thus, general limitation earnings are reduced by 160u to 240u (400u general limitation earnings/500u total earnings in positive separate categories × (200u) shipping deficit=160u reduction), and passive limitation earnings are reduced by 40u to 60u (100u passive earnings/500u total earnings in positive separate categories × (200u) shipping deficit=40u reduction). Five-twelfths of CFC's post-1986 foreign income taxes with respect to passive limitation earnings are deemed paid by A under section 960 with respect to the subpart F inclusion (25u inclusion/60u passive earnings). After the inclusion and deemed-paid taxes are computed, at the close of 1998 CFC has 400u of general limitation earnings (275u opening balance + 125u current earnings), 75u of passive limitation earnings (100u of foreign personal holding company income −25u inclusion), and a (200u) deficit in shipping limitation earnings.

Example 4. (i) The facts are the same as in *Example 3* with the addition of the following facts. In 1999, CFC earns 50u of general limitation earnings that are not subpart F income and 75u of passive limitation income that is foreign personal holding company income. Thus, CFC has 125u of current earnings and profits. CFC distributes 200u to A. Under paragraph (f)(3)(i) of this section, the recapture rules are applied first. Thus, the amount by which 1999 current earnings and profits exceed subpart F income, 50u, is recharacterized as passive limitation foreign personal holding company income. CFC's total subpart F income for 1999 is 125u of passive limitation foreign personal holding company income (75u current earnings plus 50u recapture account), and the passive limitation/foreign personal holding company income recapture account is reduced from 75u to 25u.

(ii) CFC has 150u of previously-taxed earnings and profits described in section 959(c)(2) (25u attributable to 1998 and 125u attributable to 1999), all of which is passive limitation earnings and profits. Under section 959(c), 150u of the 200u distribution is deemed to be made from earnings and profits described in section 959(c)(2). The remaining 50u is deemed to be made from earnings and profits described in section 959(c)(3). Under paragraph (f)(3)(ii) of this section, the dividend distribution is deemed to be made first out of the passive limitation recapture account to the extent thereof (25u). Under paragraph (f)(2)(iii) of this section, the passive limitation recapture account is reduced from 25u to 0. The remaining distribution of 25u is treated as made out of CFC's general limitation earnings and profits.

(iii) For purposes of computing post-1986 undistributed earnings, the rules of section 902 and 960, including the rules of § 1.960–1(i), apply. Thus, the shipping limitation accumulated deficit of (200u) reduces general limitation earnings and profits of 450u and passive limitation earnings and profits of 150u on a proportionate basis. Thus, 100% of CFC's post-1986 foreign income taxes with respect to passive limitation earnings are deemed paid by A under section 960 with respect to the 1999 subpart F inclusion of 125u (100u inclusion (numerator limited to denominator)/100u passive earnings). No post-1986 foreign income taxes remain to be deemed paid under section 902 in connection with the 25u distribution from the passive limitation/foreign personal holding company income recapture account. One-twelfth of CFC's post-1986 foreign income taxes with respect to general limitation earnings are deemed paid by A under section 902 with respect to the distribution of 25u general limitation earnings and profits described in section 959(c)(3) (25u inclusion/300u general limitation earnings). After the deemed-paid taxes are computed, at the close of 1999 CFC has 425u of general limitation earnings and profits (400u opening balance + 50u current earnings—25u distribution), 0 of passive limitation earnings (75u recapture account + 75u current foreign personal holding company income—125u inclusion—25u distribution), and a (200u) deficit in shipping limitation earnings.

(5) *Effective date.* Paragraph (e) of this section and this paragraph (f) apply to taxable years of a controlled foreign corporation beginning after March 3, 1997.

Par. 3. In § 1.952–2, paragraph (c)(1) is revised to read as follows:

§ 1.952–2 Determination of gross income and taxable income of a foreign corporation.

* * * * *

(c) *Special rules for purposes of this section—(1) Nonapplication of certain provisions.* Except where otherwise distinctly expressed, the provisions of subchapters F, G, H, L, M, N, S, and T of chapter 1 of the Internal Revenue Code shall not apply and, for taxable years of a controlled foreign corporation beginning after March 3, 1997, the provisions of section 103 of the Internal Revenue Code shall not apply.

* * * * *

Par. 4. In § 1.954–1, the *Example* in paragraph (d)(4)(iii) is revised to read as follows:

§ 1.954–1 Foreign base company income.

* * * * *

(d) * * *
(4) * * *
(iii) * * *

Example. During its 1995 taxable year, CFC, a controlled foreign corporation, earns royalty income, net of taxes, of $100 that is foreign personal holding company income. CFC has no expenses associated with this royalty income. CFC pays $50 of foreign income taxes with respect to the royalty income. For 1995, CFC has current earnings and profits of $50. CFC's subpart F income, as determined prior to the application of this paragraph (d), exceeds its current earnings and profits. Thus, under paragraph (d)(4)(ii) of this section, the amount of CFC's only net item of income, the royalty income, will be limited to $50. The remaining $50 will be subject to recharacterization in a subsequent taxable year under section 952(c)(2). Because the amount of foreign income taxes paid with respect to this net item of income is $50, the effective rate of tax on the item, for purposes of this paragraph (d), is 50 percent ($50 of taxes/$50 net item + $50 of taxes). Accordingly, an election under paragraph (d)(5) of this section may be made to exclude

the item of income from the computation of subpart F income.

* * * * *

Par. 5. In § 1.954–2, paragraphs (b)(3), (g)(2)(ii)(B)(*1*)(*i*) and (g)(2)(ii)(B)(*2*) are revised to read as follows:

§ 1.954–2 Foreign personal holding company income.

* * * * *

(b) * * *

(3) *Treatment of tax exempt interest.* For taxable years of a controlled foreign corporation beginning after March 3, 1997, foreign personal holding company income includes all interest income, including interest that is described in section 103 (see § 1.952–2(c)(1)).

* * * * *

(g) * * *

(2) * * *

(ii) * * *

(B) * * *

(*1*) * * *

(*i*) Arises from a transaction (other than a hedging transaction) entered into, or property used or held for use, in the normal course of the controlled foreign corporation's trade or business, other than the trade or business of trading foreign currency;

* * * * *

(*2*) The foreign currency gain or loss arises from a bona fide hedging transaction, as defined in paragraph (a)(4)(ii) of this section, with respect to a transaction or property that satisfies the requirements of paragraphs (g)(2)(ii)(B)(*1*) (*i*) through (*iii*) of this section, provided that any gain or loss arising from such transaction or property that is attributable to changes in exchange rates is clearly determinable from the records of the CFC as being derived from such transaction or property. For purposes of this paragraph (g)(2)(ii)(B)(*2*), a hedging transaction will satisfy the aggregate hedging rules of § 1.1221–2(c)(7) only if all (or all but a de minimis amount) of the aggregate risk being hedged arises in connection with transactions or property that satisfy the requirements of paragraphs (g)(2)(ii)(B)(*1*) (*i*) through (*iii*) of this section, provided that any gain or loss arising from such transactions or property that is attributable to changes in exchange rates is clearly determinable from the records of the CFC as being derived from such transactions or property.

* * * * *

Par. 6. Section 1.957–1 is amended by:

1. Removing the last sentence of paragraph (c) *Example 8* and adding two sentences in its place.

2. Revising the last sentence of paragraph (c) *Example 9.*

The addition and revision read as follows:

§ 1.957–1 Definition of controlled foreign corporation.

* * * * *

(c) * * *

Example 8. * * * JV was a controlled foreign corporation on the following day because over 50 percent of the total value in the corporation was held by a person that was a United States shareholder under section 951(b). See § 1.951–1(f).

Example 9. * * * JV became a controlled foreign corporation on the following day because over 50 percent of the total value in the corporation was held by a person that was a United States shareholder under section 951(b).

* * * * *

Par. 7. In § 1.960–1, paragraph (i) is added to read as follows:

§ 1.960–1 Foreign tax credit with respect to taxes paid on earnings and profits of controlled foreign corporations.

* * * * *

(i) *Computation of deemed-paid taxes in post-1986 taxable years*—(1) *General rule.* If a domestic corporation is eligible to compute deemed-paid taxes under section 960(a)(1) with respect to an amount included in gross income under section 951(a), then, such domestic corporation shall be deemed to have paid a portion of the foreign corporation's post-1986 foreign income taxes determined under section 902 and the regulations under that section in the same manner as if the amount so included were a dividend paid by such foreign corporation (determined by applying section 902(c) in accordance with section 904(d)(3)(B)).

(2) *Ordering rule for computing deemed-paid taxes under sections 902 and 960.* If a domestic corporation computes deemed-paid taxes under both sections 902 and 960 in the same taxable year, section 960 shall be applied first. After the deemed-paid taxes are computed under section 960 with respect to a deemed income inclusion, post-1986 undistributed earnings and post-1986 foreign income taxes in each separate category shall be reduced by the appropriate amounts before deemed-paid taxes are computed under section 902 with respect to a dividend distribution.

(3) *Computation of post-1986 undistributed earnings.* Post-1986 undistributed earnings (or an accumulated deficit in post-1986 undistributed earnings) are computed under section 902 and the regulations under that section.

(4) *Allocation of accumulated deficits.* For purposes of computing post-1986 undistributed earnings under sections 902 and 960, a post-1986 accumulated deficit in a separate category shall be allocated proportionately to reduce post-1986 undistributed earnings in the other separate categories. However, a deficit in any separate category shall not permanently reduce earnings in other separate categories, but after the deemed-paid taxes are computed the separate limitation deficit shall be carried forward in the same separate category in which it was incurred. In addition, because deemed-paid taxes may not exceed taxes paid or accrued by the controlled foreign corporation, in computing deemed-paid taxes with respect to an inclusion out of a separate category that exceeds post-1986 undistributed earnings in that separate category, the numerator of the deemed-paid credit fraction (deemed inclusion from the separate category) may not exceed the denominator (post-1986 undistributed earnings in the separate category).

(5) *Examples.* The application of this paragraph (i) may be illustrated by the following examples. See § 1.952–1(f)(4) for additional illustrations of these rules.

Example 1. (i) A, a U.S. person, is the sole shareholder of CFC, a controlled foreign corporation formed on January 1, 1998, whose functional currency is the u. In 1998 CFC earns 100u of general limitation income described in section 904(d)(1)(I) that is not subpart F income and 100u of foreign personal holding company income that is passive income described in section 904(d)(1)(A). In 1998 CFC also incurs a (50u) loss in the shipping category described in section 904(d)(1)(D). CFC's subpart F income for 1998, 100u, does not exceed CFC's current earnings and profits of 150u. Accordingly, all 100u of CFC's subpart F income is included in A's gross income under section 951(a)(1)(A). Under section 904(d)(3)(B) of the Internal Revenue Code and paragraph (i)(1) of this section, A includes 100u of passive limitation income in gross income for 1998.

(ii) For purposes of computing post-1986 undistributed earnings under sections 902, 904(d) and 960 with respect to the subpart F inclusion, the shipping limitation deficit of (50u) is allocated proportionately to reduce general limitation earnings of 100u and passive limitation earnings of 100u. Thus, general limitation earnings are reduced by 25u to 75u (100u general limitation earnings/200u total earnings in positive separate categories × (50u) shipping deficit = 25u reduction), and passive limitation earnings are reduced by 25u to 75u (100u passive earnings/200u total earnings in positive separate categories × (50u) shipping deficit = 25u reduction). All of CFC's post-1986 foreign income taxes with respect to passive limitation earnings are deemed paid by A under section 960 with respect to the 100u subpart F inclusion of passive income (75u inclusion (numerator limited to denominator

under paragraph (i)(4) of this section)/75u passive earnings). After the inclusion and deemed-paid taxes are computed, at the close of 1998 CFC has 100u of general limitation earnings, 0 of passive limitation earnings (100u of foreign personal holding company income — 100u inclusion), and a (50u) deficit in shipping limitation earnings.

Example 2. (i) The facts are the same as in *Example 1* with the addition of the following facts. In 1999, CFC distributes 150u to A. CFC has 100u of previously-taxed earnings and profits described in section 959(c)(2) attributable to 1998, all of which is passive limitation earnings and profits. Under section 959(c), 100u of the 150u distribution is deemed to be made from earnings and profits described in section 959(c)(2). The remaining 50u is deemed to be made from earnings and profits described in section 959(c)(3). The entire dividend distribution of 50u is treated as made out of CFC's general limitation earnings and profits. See section 904(d)(3)(D).

(ii) For purposes of computing post-1986 undistributed earnings under section 902 with respect to the 1999 dividend of 50u, the shipping limitation accumulated deficit of (50u) reduces general limitation earnings and profits of 100u to 50u. Thus, 100% of CFC's post-1986 foreign income taxes with respect to general limitation earnings are deemed paid by A under section 902 with respect to the 1999 dividend of 50u (50u dividend/50u general limitation earnings). After the deemed-paid taxes are computed, at the close of 1999 CFC has 50u of general limitation earnings (100u opening balance—50u distribution), 0 of passive limitation earnings, and a (50u) deficit in shipping limitation earnings.

(6) *Effective date.* This paragraph (i) applies to taxable years of a controlled foreign corporation beginning after March 3, 1997.

Margaret Milner Richardson,

Commissioner of Internal Revenue.

Approved: December 11, 1996.

Donald C. Lubick,

Assistant Secretary of the Treasury.

[FR Doc. 97–32378 Filed 12–31–96; 8:45 am]

BILLING CODE 4830–01–U

---

26 CFR Parts 31 and 602

[TD 8706]

RIN 1545–AR67

Electronic Filing of Form W–4

AGENCY: Internal Revenue Service (IRS), Treasury.

ACTION: Final regulations.

SUMMARY: This document contains final regulations relating to Form W–4, Employee's Withholding Allowance Certificate. The final regulations authorize employers to establish electronic systems for use by employees in filing their Forms W–4. The regulations provide employers and employees with guidance necessary to comply with the law. The regulations affect employers that establish electronic systems and their employees.

EFFECTIVE DATE: These final regulations are effective January 2, 1997.

FOR FURTHER INFORMATION CONTACT: Karin Loverud, (202) 622–6060 (not a toll-free number).

SUPPLEMENTARY INFORMATION:

Paperwork Reduction Act

The collection of information contained in these final regulations has been reviewed and approved by the Office of Management and Budget in accordance with the Paperwork Reduction Act (44 U.S.C. 3507) under control number 1545–1435. Responses to this collection of information are mandatory.

An agency may not conduct or sponsor, and a person is not required to respond to, a collection of information unless the collection of information displays a valid control number.

The estimated annual burden per respondent is 20 hours.

Comments concerning the accuracy of this burden estimate and suggestions for reducing this burden should be sent to the Internal Revenue Service, Attn: IRS Reports Clearance Officer, T:FP, Washington, DC 20224, and to the Office of Management and Budget, Attn: Desk Officer for the Department of the Treasury, Office of Information and Regulatory Affairs, Washington, DC 20503.

Books or records relating to this collection of information must be retained as long as their contents may become material in the administration of any internal revenue law. Generally, tax returns and tax return information are confidential, as required by 26 U.S.C. 6103.

Background

On April 15, 1994, a notice of proposed rulemaking [EE–45–93] containing proposed regulations relating to Form W–4, Employee's Withholding Allowance Certificate, was published in the Federal Register (59 FR 18057).

On December 21, 1994, temporary regulations (TD 8577) clarifying the existing proposed regulations were published in the Federal Register (59 FR 65712). A notice of proposed rulemaking (EE–45–93) cross-referencing the temporary regulations was published in the Federal Register for the same day (59 FR 65740).

Written comments responding to these notices were received. Public hearings were requested and were held on July 15, 1994, and November 7, 1995.

After consideration of all the comments, the proposed regulations under section 3402(f) are adopted as revised by this Treasury decision. The comments and revisions are discussed below.

Explanation of Revisions and Summary of Comments

1. Relationship between paper and electronic Forms W–4

A withholding exemption certificate (Form W–4) may be in either paper or electronic form. Therefore, an employee will furnish a Form W–4 to the employer either on paper or electronically. To clarify that an electronic Form W–4 has the same status as a paper Form W–4, the final regulations make minor revisions to § 31.3402(f)(5)–1, Form and contents of withholding exemption certificates. Further, the final regulations appear as § 31.3402(f)(5)–1(c), rather than in a separate regulations section limited to electronic forms.

2. Electronic filing by all employees.

The existing proposed and temporary regulations require employers that establish electronic systems to provide employees with the option of filing paper or electronic Forms W–4. Several commentators requested that employers be allowed to adopt systems under which all employees file Forms W–4 electronically. These commentators stated that a system under which all employees file electronically would reduce employer burden in terms of costs and time (for example, eliminate maintenance of duplicative paper and electronic systems). Similarly, it would reduce employee burden in terms of time and choosing a filing option.

The IRS and Treasury want to assist in reducing burdens on both employers and employees and to make it as easy as possible for employers to adopt less burdensome systems. The final regulations permit an employer to adopt a system under which all employees file Forms W–4 electronically. The IRS and Treasury expect, however, that an employer will make a paper option reasonably available upon request to any employee who has a serious objection to using the electronic system or whose access to, or ability to use, the system may be limited (for example, as a result of a disability). The paper option would be satisfied, for example, if the employer informs employees how they can obtain a paper Form W–4 and where they should submit the completed paper Form W–4. The IRS and Treasury also expect that employers will comply with all applicable law

governing the workplace and terms and conditions of employment, such as the Americans with Disabilities Act (42 U.S.C. 12112(a)). Compliance with these regulations does not guarantee that a system for filing Forms W–4 electronically is in compliance with those applicable laws.

3. Electronic Forms W–4

Several commentators recommended that electronic systems be allowed for all Forms W–4 without exception. The prior proposed and temporary regulations specifically exclude (1) Forms W–4 required upon commencement of employment (initial Form W–4), and (2) Forms W–4 required to be furnished to the IRS by employers because more than 10 withholding exemptions are claimed or, if the employee is expected to earn more than $200 per week, exemption from withholding is claimed.

Initial Form W–4. Section 3402(f)(2)(A) of the Internal Revenue Code (Code) requires a new employee to furnish the employer with a signed withholding exemption certificate. Section 6061 requires all Forms W–4 to be signed. See discussion below under *''5. Signature Under Penalties of Perjury''* and § 301.6061–1(b), which states that the Secretary may prescribe in forms, instructions, or other appropriate guidance the method of signing any return, statement, or other document required to be made under any provision of the internal revenue laws or regulations. The final regulations permit electronic systems to include Forms W–4 required upon commencement of employment.

Forms W–4 claiming more than 10 exemptions or exemption from withholding. Section 31.3402(f)(2)–1(g) requires employers to submit to the IRS copies of certain Forms W–4 furnished to them by their employees. The Forms W–4 required to be submitted are those on which the employee claims either (1) more than 10 withholding exemptions, or (2) exemption from withholding (and the employee is expected to earn more than $200 per week).

Under § 31.3402(f)(2)–1(g)(5), if the IRS determines that a Form W–4, a copy of which was submitted to the IRS, is defective, the IRS will notify in writing both the employer and the employee. (The notice is referred to as a ''lock-in letter.'') A Form W–4 is defective if (1) the IRS determines that the Form W–4 contains a materially incorrect statement, or (2) following communication with the employee, the IRS lacks sufficient information to determine whether the certificate is correct. The lock-in letter issued by the IRS advises the employer that the employee either is not entitled to claim exemption from withholding or is not entitled to claim more withholding exemptions than the number specified by the IRS in the notice, or both. If the employee subsequently files a new Form W–4, the employer may withhold on the basis of that new Form W–4 only if the new Form W–4 is consistent with the lock-in letter. The employer must continue to withhold on the basis of that advice until the IRS revokes in writing its lock-in letter.

The final regulations permit electronic systems to include Forms W–4 on which employees claim more than 10 withholding exemptions or exemption from withholding. However, the IRS and Treasury expect that electronic systems, alone or in conjunction with the rest of an employer's payroll system, will ensure compliance with the advice contained in a lock-in letter. For instance, an electronic system can ensure compliance with a lock-in letter by prohibiting an employee for whom a lock-in letter was issued from filing any electronic Form W–4 or prohibiting the employee from claiming more withholding exemptions than the number specified in the IRS notice. Additionally, an employer may choose to require any employee to file a paper Form W–4 if the employee wishes to claim more than 10 withholding exemptions or exemption from withholding.

4. Submission of Certain Forms W–4 to IRS

Section 31.3402(f)(2)–1(g) requires employers to submit to the IRS copies of Forms W–4 on which the employee claims either more than 10 withholding exemptions or exemption from withholding (and the employee is expected to earn more than $200 per week). Generally, the copies are sent quarterly to the IRS along with the employer's Form 941, Employer's Quarterly Federal Tax Return. Copies can also be submitted earlier and more often to the employer's IRS service center.

Employers that establish electronic systems will satisfy the requirement of § 31.3402(f)(2)–1(g) if they furnish the Form W–4 information on magnetic media. Before using magnetic media, employers must submit Form 4419, Application for Filing Information Returns Magnetically/Electronically, to request authorization. Rev. Proc. 92–80 (1992–2 C.B. 465) contains specifications for filing Forms W–4 on magnetic tape and on 5¼- and 3½-inch magnetic diskettes. Electronic transmission of Form W–4 information to the IRS is not yet available.

5. Signature Under Penalties of Perjury

Section 6061 of the Code requires that any return, statement, or other document required to be made under any provision of the Code or regulations be signed. Section 6065 requires that any such document contain or be verified by a written declaration that it is made under the penalties of perjury. These requirements apply to all Forms W–4, including those filed electronically, and are reflected in § 31.3402(f)(5)–1(c)(iii) of the final regulations.

Although sections 6061 and 6065 apply to all Forms W–4, the IRS and Treasury are concerned that some electronic systems established under the temporary regulations may not include a signature under penalties of perjury. The final regulations, therefore, include guidance on the perjury statement and the electronic signature.

For certain Forms W–4, the final regulations treat the signature-under-penalties-of-perjury-statement requirement as satisfied until January 1, 1999. This special rule applies only if the system precludes the electronic filing of Forms W–4 required upon commencement of employment and Forms W–4 claiming more than 10 withholding exemptions or exemption from withholding. Moreover, the special rule applies only to Forms W–4 filed electronically before the earlier of (1) January 1, 1999, or (2) the first date on which the employer's electronic system permits the filing of Forms W–4 required upon commencement of employment or Forms W–4 claiming more than 10 withholding exemptions or exemption from withholding.

The IRS and Treasury will consider written comments pertaining to the provisions relating to signatures under penalties of perjury. Submissions should be sent to: CC:DOM:CORP:R (TD 8706), room 5228, Internal Revenue Service, POB 7604, Ben Franklin Station, Washington, DC 20044. Alternatively, taxpayers may submit comments electronically via the Internet by selecting the ''Tax Regs'' option on the IRS Home Page, or by submitting comments directly to the IRS Internet site at http://www.irs.ustreas.gov/prod/tax__regs/comments.html. Submissions may be hand delivered between the hours of 8 a.m. and 5 p.m. to: CC:DOM:CORP:R (TD 8706), Courier's Desk, Internal Revenue Service, 1111 Constitution Avenue NW, Washington, DC.

6. Employer Retention of Forms W–4 and Predecessor and Successor Employers

One commentator requested guidance concerning the period for which paper Forms W–4 are required to be retained under § 31.6001–1(e) after the employer establishes an electronic system and in predecessor-employer/successor-employer situations. Electronic Forms W–4 have the same status as paper Forms W–4. Therefore, guidance that applies to paper Forms W–4 also applies to electronic Forms W–4. For further information, see Rev. Proc. 91–59 (1991–2 C.B. 841) (information regarding the retention of records using a variety of automatic data processing systems); and section 5 of Rev. Proc. 96–60 (1996–53 I.R.B.) (predecessor/successor situations).

Special Analyses

It has been determined that this Treasury decision is not a significant regulatory action as defined in EO 12866. Therefore, a regulatory assessment is not required. It also has been determined that section 553(b) of the Administrative Procedure Act (5 U.S.C. chapter 5) does not apply to these regulations, and, because the notice of proposed rulemaking preceding the regulations was issued prior to March 29, 1996, the Regulatory Flexibility Act (5 U.S.C. chapter 6) does not apply. Pursuant to section 7805(f) of the Code, the notice of proposed rulemaking preceding these regulations was submitted to the Small Business Administration for comment on its impact on small business.

Drafting Information

The principal author of these regulations is Karin Loverud, Office of the Associate Chief Counsel (Employee Benefits and Exempt Organizations), IRS. However, other personnel from the IRS and Treasury Department participated in their development.

List of Subjects

26 CFR Part 31

Employment taxes, Income taxes, Penalties, Pensions, Railroad retirement, Reporting and recordkeeping requirements, Social Security, Unemployment compensation.

26 CFR Part 602

Reporting and recordkeeping requirements.

Adoption of Amendments to the Regulations

Accordingly, 26 CFR parts 31 and 602 are amended as follows:

PART 31—EMPLOYMENT TAXES AND COLLECTION OF INCOME TAX AT SOURCE

Paragraph 1. The authority citation for part 31 is amended by adding an entry for section 31.3402(f)(5)–1 to read as follows:

Authority: 26 U.S.C. 7805 * * * Section 31.3402(f)(5)–1 also issued under 26 U.S.C. 3402 (i) and (m). * * *

Par. 2. Section 31.3402(f)(5)–1 is amended as follows:

1. Headings are added to paragraphs (a) and (b).
2. The fourth sentence of paragraph (a) is revised.
3. Paragraph (c) is added.
4. The authority citation which follows the end of the section is removed.

The revisions and additions read as follows:

§ 31.3402(f)(5)–1 Form and contents of withholding exemption certificates.

(a) *Form W–4.* * * * Blank copies of paper Forms W–4 will be supplied to employers upon request to the Internal Revenue Service. * * *

(b) *Invalid Form W–4.* * * *

(c) *Electronic Form W–4*—(1) *In general.* An employer may establish a system for its employees to file withholding exemption certificates electronically.

(2) *Requirements*—(i) *In general.* The electronic system must ensure that the information received is the information sent, and must document all occasions of employee access that result in the filing of a Form W–4. In addition, the design and operation of the electronic system, including access procedures, must make it reasonably certain that the person accessing the system and filing the Form W–4 is the employee identified in the form.

(ii) *Same information as paper Form W–4.* The electronic filing must provide the employer with exactly the same information as the paper Form W–4.

(iii) *Jurat and signature requirements.* The electronic filing must be signed by the employee under penalties of perjury.

(A) *Jurat.* The jurat (perjury statement) must contain the language that appears on the paper Form W–4. The electronic program must inform the employee that he or she must make the declaration contained in the jurat and that the declaration is made by signing the Form W–4. The instructions and the language of the jurat must immediately follow the employee's income tax withholding selections and immediately precede the employee's electronic signature.

(B) *Electronic signature.* The electronic signature must identify the employee filing the electronic Form W–4 and authenticate and verify the filing. For this purpose, the terms ''authenticate'' and ''verify'' have the same meanings as they do when applied to a written signature on a paper Form W–4. An electronic signature can be in any form that satisfies the foregoing requirements. The electronic signature must be the final entry in the employee's Form W–4 submission.

(iv) *Copies of electronic Forms W–4.* Upon request by the Internal Revenue Service, the employer must supply a hardcopy of the electronic Form W–4 and a statement that, to the best of the employer's knowledge, the electronic Form W–4 was filed by the named employee. The hardcopy of the electronic Form W–4 must provide exactly the same information as, but need not be a facsimile of, the paper Form W–4.

(3) *Effective date*—(i) *In general.* This paragraph applies to all withholding exemption certificates filed electronically by employees on or after January 2, 1997.

(ii) *Special rule for certain Forms W–4.* In the case of an electronic system that precludes the filing of Forms W–4 required on commencement of employment and Forms W–4 claiming more than 10 withholding exemptions or exemption from withholding, the requirements of paragraph (c)(2)(iii) of this section will be treated as satisfied if the Form W–4 is filed electronically before January 1, 1999.

§ 31.3402(f)(5)–2T [Removed]

Par. 3. Section 31.3402(f)(5)–2T is removed.

PART 602—OMB CONTROL NUMBERS UNDER THE PAPERWORK REDUCTION ACT

Par. 4. The authority citation for part 602 continues to read as follows:

Authority: 26 U.S.C. 7805.

Par. 5. In § 602.101, paragraph (c) is amended by:

1. Removing the entry for 31.3402(f)(5)–2T from the table.
2. Revising the entry for 31.3402(f)(5)–1 to read as follows:

§ 602.101 OMB Control numbers.

* * * * *

(c) * * *

CFR part or section where identified and described	Current OMB Control No.
* * * * *	
31.3402(f)(5)–1	1545–0010 1545–1435

CFR part or section where identified and described	Current OMB Control No.
* * * * *	

Approved: December 12, 1996.

Margaret Milner Richardson,

Commissioner of Internal Revenue.

Donald C. Lubick,

Acting Assistant Secretary of the Treasury.

[FR Doc. 96–32669 Filed 12–31–96; 8:45 am]

BILLING CODE 4830–01–U

26 CFR Part 53

[TD 8705]

RIN 1545–AU65

Requirement of Return and Time for Filing

AGENCY: Internal Revenue Service (IRS), Treasury.

ACTION: Final and temporary regulations.

SUMMARY: This document contains final and temporary regulations providing that disqualified persons and organization managers liable for Internal Revenue Code section 4958 excise taxes are required to file Form 4720. The regulations also specify the filing date for returns for the period to which the new excise taxes applied retroactively. These excise taxes are imposed on excess benefit transactions between disqualified persons, as statutorily defined, and sections 501(c)(3) and (4) organizations, except for private foundations.

DATES: These regulations are effective January 2, 1997.

For dates of applicability, see § 53.6071–1T(f) of these regulations.

FOR FURTHER INFORMATION CONTACT: Phyllis Haney, (202) 622–4290 (not a toll-free number).

SUPPLEMENTARY INFORMATION:

Background

This document contains amendments to the Foundation and Similar Excise Taxes regulations (26 CFR part 53) under sections 6011 and 6071. These regulations provide guidance relating to the requirement of a return to accompany payment of section 4958 excise taxes and the time for filing that return. These rules were first published in Notice 96–46 (1996–39 I.R.B. 7) (September 23, 1996).

Taxpayer Bill of Rights 2, Public Law 104–168, 110 Stat. 1452 (TBOR2), enacted July 30, 1996, added section 4958 to the Code. As described more fully below, section 4958 imposes excise taxes on excess benefit transactions. Section 4958 taxes apply retroactively to excess benefit transactions occurring on or after September 14, 1995. The taxes do not, however, apply to any benefit arising from a transaction pursuant to any written contract which was binding on September 13, 1995, and at all times thereafter before such transaction occurred.

An ''excess benefit transaction'' subject to tax under section 4958 is any transaction in which an economic benefit is provided by an organization described in section 501(c)(3) (except for a private foundation) or 501(c)(4) directly or indirectly to, or for the use of, any disqualified person if the value of the economic benefit provided exceeds the value of the consideration (including the performance of services) received for providing the benefit. A ''disqualified person'' is any person who was, at any time during the 5-year period ending on the date of the excess benefit transaction, in a position to exercise substantial influence over the affairs of the organization. Disqualified persons also include family members and certain entities in which at least 35 percent of the control or beneficial interest are held by persons described in the preceding sentence. An ''organization manager'' is any officer, director, trustee, or any individual having powers or responsibilities similar to those of any officer, director, or trustee.

Section 4958 imposes three taxes. The first tax is equal to 25 percent of the excess benefit amount, and is to be paid by any disqualified person who engages in an excess benefit transaction. The second tax is equal to 200 percent of the excess benefit amount, and is to be paid by any disqualified person if the excess benefit transaction is not corrected within the taxable period. The third tax is equal to 10 percent of the excess benefit amount, and is to be paid by any organization manager who knowingly participates in an excess benefit transaction. The maximum amount of this third tax with respect to any one excess benefit transaction may not exceed $10,000. These regulations prescribe Form 4720 for calculating and paying the first and third taxes described above.

TBOR2 also amended section 6033(b) to require section 501(c)(3) organizations to report the amounts of the taxes paid under section 4958 with respect to excess benefit transactions involving the organization, as well as any other information the Secretary may require concerning those transactions. Section 6033(f) also was amended to impose the same reporting requirements on section 501(c)(4) organizations. Those amendments to section 6033 only apply to organizations' returns for taxable years beginning after July 30, 1996. These and other TBOR2 amendments to the reporting requirements for section 501(c)(3) and (4) organizations are reflected on IRS Forms 990 and 990–EZ beginning with the 1996 versions.

Explanation of Provisions

The regulations provide that disqualified persons and organization managers, as defined in sections 4958(f)(1) and (2), who are liable for section 4958 excise taxes on excess benefit transactions, as defined in section 4958(c)(1), are required to file a return on Form 4720. The general rule is that returns will be due on or before the 15th day of the fifth month following the close of the disqualified person's or organization manager's taxable year. The regulations also provide that returns on Form 4720 for taxable years ending after September 13, 1995, and on or before July 30, 1996, will be due on or before December 15, 1996. See Notice 96–46 (1996–39 I.R.B. 7) (September 23, 1996).

Special Analyses

It has been determined that this Treasury decision is not a significant regulatory action as defined in EO 12866. Therefore, a regulatory assessment is not required. It also has been determined that section 553(b) of the Administrative Procedure Act (5 U.S.C. chapter 5) does not apply to these regulations, and because the regulation does not impose a collection of information on small entities, the Regulatory Flexibility Act (5 U.S.C. chapter 6) does not apply. Pursuant to section 7805(f) of the Internal Revenue Code, these temporary regulations will be submitted to the Chief Counsel for Advocacy of the Small Business Administration for comment on their impact on small business.

Drafting Information

The principal author of these regulations is Phyllis Haney, Office of Associate Chief Counsel (Employee Benefits and Exempt Organizations). However, other personnel from the IRS and Treasury Department participated in their development.

List of Subjects in 26 CFR Part 53

Excise taxes, Foundations, Investments, Lobbying, Reporting and recordkeeping requirements.

Adoption of Amendments to the Regulations

Accordingly, 26 CFR part 53 is amended as follows:

PART 53—FOUNDATION AND SIMILAR EXCISE TAXES

Paragraph 1. The authority citation for part 53 continues to read as follows:

Authority: 26 U.S.C. 7805.

§ 53.6011–1 [Amended]

Par. 2. In § 53.6011–1, paragraph (b) is amended by:

1. Removing from the first sentence, the language ''or 4955(a),'' and adding '', 4955(a), or 4958(a),'' in its place.

2. Removing from the last sentence, the language ''or 4955(a),'' and adding '', 4955(a), or 4958(a),'' in its place.

Par. 3. Section 53.6071–1T is added to read as follows:

§ 53.6071–1T Time for filing returns (temporary).

(a) through (e) [Reserved]. For further guidance see § 53.6071–1(a) through (e).

(f) *Taxes imposed on excess benefit transactions engaged in by organizations described in sections 501(c)(3) (except private foundations) and 501(c)(4)*—(1) *General rule.* A Form 4720 required by § 53.6011–1(b) for a disqualified person or organization manager liable for tax imposed by section 4958(a) shall be filed by that person on or before the 15th day of the fifth month following the close of such person's taxable year.

(2) *Special rule for taxable years ending after September 13, 1995, and on or before July 30, 1996.* A Form 4720 required by § 53.6011–1(b) for a disqualified person or organization manager liable for tax imposed by section 4958(a) on an excess benefit transaction occurring in such person's taxable year ending after September 13, 1995, and on or before July 30, 1996, is due on or before December 15, 1996.

Dated: December 10, 1996.

Margaret Milner Richardson,

Commissioner of Internal Revenue.

Donald C. Lubick,

Acting Assistant Secretary of the Treasury.

[FR Doc. 96–32376 Filed 12–31–96; 8:45 am]

BILLING CODE 4830–01–U

Fiscal Service

31 CFR Part 357

[Department of the Treasury Circular, Public Debt Series, No. 2–86]

Regulations Governing Book-Entry Treasury Bonds, Notes, and Bills; Determination Regarding State Statute; California

AGENCY: Bureau of the Public Debt, Fiscal Service, Treasury.

ACTION: Determination of substantially identical state statute.

SUMMARY: The Department of the Treasury is announcing that it has reviewed the State of California's recently enacted law adopting Revised Article 8 of the Uniform Commercial Code—Investment Securities (''Revised Article 8'') and determined that the state statute is substantially identical to the uniform version of Revised Article 8 for purposes of interpreting the rules in 31 CFR Part 357, Subpart B (the ''TRADES'' regulations). Therefore, the portion of the TRADES rule requiring application of Revised Article 8 if a state has not adopted Revised Article 8 will no longer be applicable for California.

EFFECTIVE DATE: January 2, 1997.

FOR FURTHER INFORMATION CONTACT: Walter T. Eccard, Chief Counsel (202) 219–3320, or Cynthia E. Reese, Deputy Chief Counsel (202) 219–3320.

SUPPLEMENTARY INFORMATION: On August 23, 1996, the Department published a final rule to govern securities held in the commercial book-entry system, now referred to as Treasury/Reserve Automated Debt Entry System (''TRADES''). 61 FR 43626.

In the commentary to the final regulations, Treasury stated that for the 28 states that had by then adopted Revised Article 8, the versions enacted were ''substantially identical'' to the uniform version for purposes of the rule. Therefore for those states, that portion of the TRADES rule requiring application of Revised Article 8 was not invoked. Treasury also indicated in the commentary that as additional states adopted Revised Article 8, notice would be provided in the Federal Register as to whether the enactments were substantially identical to the uniform version so that the federal application of Revised Article 8 would no longer be in effect for those states. Treasury adopted this approach in an attempt to provide certainty in application of the rule in response to public comments. This, the first such notice, addressed California's recent adoption of Article 8.

Treasury has reviewed the California enactment and concluded that the variations in California's statute from Revised Article 8 are minor. Therefore, Treasury has concluded that the California enactment is substantially identical to Revised Article 8. Accordingly, if either § 357.10(b) or § 357.11(a) directs a person to California, the provisions of §§ 357.10(c) and 357.11(d) of the TRADES rule are not applicable.

Dated: December 20, 1996.

Richard L. Gregg,

Commissioner of the Public Debt.

[FR Doc. 96–33274 Filed 12–31–96; 8:45 am]

BILLING CODE 4810–39–M

DEPARTMENT OF HEALTH AND HUMAN SERVICES

Health Care Financing Administration

42 CFR Part 413

[BPD–788–F]

RIN 0938–AH12

Medicare Program; Electronic Cost Reporting for Skilled Nursing Facilities and Home Health Agencies

AGENCY: Health Care Financing Administration (HCFA), HHS.

ACTION: Final rule.

SUMMARY: This final rule adds the requirement that, for cost reporting periods ending on or after February 1, 1997, most skilled nursing facilities and home health agencies must submit cost reports currently required under the Medicare regulations in a standardized electronic format. This rule also allows a delay or waiver of this requirement where implementation would result in financial hardship for a provider. The provisions of this rule allow for more accurate preparation and more efficient processing of cost reports.

DATES: This final rule is effective February 1, 1997. This rule is applicable for cost reporting periods ending on or after February 1, 1997.

FOR FURTHER INFORMATION CONTACT: Tom Talbott, (410) 786–4592.

SUPPLEMENTARY INFORMATION:

I. Background

Generally, under the Medicare program, skilled nursing facilities (SNFs) and home health agencies (HHAs) are paid for the reasonable costs of the covered items and services they furnish to Medicare beneficiaries. Sections 1815(a) and 1833(e) of the Social Security Act (the Act) provide that no payments will be made to a provider unless it has furnished the

information, requested by the Secretary, needed to determine the amount of payments due the provider. In general, providers submit this information through cost reports that cover a 12-month period. Rules governing the submission of cost reports are set forth in Federal regulations at 42 CFR 413.20 and 42 CFR 413.24.

Under § 413.20(a), all providers participating in the Medicare program are required to maintain sufficient financial records and statistical data for proper determination of costs payable under the program. In addition, providers must use standardized definitions and follow accounting, statistical, and reporting practices that are widely accepted in the health care industry and related fields. Under §§ 413.20(b) and 413.24(f), providers are required to submit cost reports annually, with the reporting period based on the provider's accounting year. Additionally, under § 412.52, all hospitals participating in the prospective payment system must meet cost reporting requirements set forth at §§ 413.20 and 413.24.

Section 1886(f)(1)(B)(i) of the Act required the Secretary to place into effect a standardized electronic cost reporting system for all hospitals participating in the Medicare program. This provision was effective for hospital cost reporting periods beginning on or after October 1, 1989. On May 25, 1994, we published a final rule with comment period in the Federal Register implementing the electronic cost reporting requirement for hospitals (59 FR 26960). On June 27, 1995, we published a final rule that responded to comments on the May 25, 1994 final rule with comment period (60 FR 33123).

II. Provisions of the Proposed Regulations

On December 5, 1995, we published a proposed rule in the Federal Register (60 FR 62237) that proposed to require SNFs and HHAs to submit cost reports in a standardized electronic format for cost reporting periods beginning on or after October 1, 1995. We also proposed that if a SNF or HHA believes that implementation of the electronic submission requirement would cause a financial hardship, it may submit a written request for a waiver or a delay of these requirements.

We stated that we essentially would apply the current hospital electronic cost reporting requirements to SNFs and HHAs. Hospitals participating in Medicare must submit cost reports in a uniform electronic format for cost reporting periods beginning on or after October 1, 1989. These hospital cost reports must be electronically transmitted to the intermediary in American Standard Code for Information Interchange (ASCII) format. In addition to the electronic file, hospitals were initially required to submit a hard copy of the full cost report, which was later changed to a hard copy of a one-page settlement summary, a statement of certain worksheet totals found in the electronic file, and a statement signed by the hospital's administrator or chief financial officer certifying the accuracy of the electronic file (§ 413.24(f)(4)(iii)). Further, to preserve the integrity of the electronic file, we specified procedures regarding the processing of the electronic cost report once it is submitted to the intermediary. In addition, the provider's electronic program must be able to disclose that changes have been made to the provider's as-filed cost report. We proposed to apply these same hospital electronic cost reporting requirements to SNFs and HHAs.

In the proposed rule, we discussed in detail the benefits of requiring electronic cost reports for SNFs and HHAs. The use of electronically prepared cost reports will be beneficial for SNFs and HHAs because the cost reporting software for these reports will virtually eliminate computational errors and substantially reduce preparation time. The use of cost reporting software will also save time when the provider discovers that it needs to change individual entries in the cost report.

III. Discussion of Public Comments

We received six timely comments in response to the proposed rule. The majority of the commenters supported our proposal but had some questions and concerns regarding its implementation. A summary of these comments and our responses follow:

Waivers and Exclusions

Comment. Several commenters requested clarification of the requirement for granting a waiver of electronic filing due to financial hardship. While some commenters suggested that we develop a defined set of criteria for determining when the requirement for electronic filing would impose a financial hardship on a provider, others supported our proposal of a case-by-case review of waiver requests. One commenter suggested that, in addition to financial hardship, waivers should be automatically granted for providers with low Medicare utilization.

Commenters supporting case-by-case review advised us to remain flexible in making determinations of financial hardship until we have the experience and data to determine whether set criteria are necessary. Another commenter supporting our proposal noted that most providers have, or have access to, a computer and recommended that as part of a waiver request, a provider should be required to include a statement certifying that it does not own, rent, or have access to a computer.

Commenters opposing case-by-case review were concerned that, based on hospitals' experiences with electronic filing, few waivers would be granted. These commenters asserted that it would be best to establish specific criteria for the waiver process.

Response. We do not believe that the development of specific criteria for waiver requests is appropriate. For example, a characteristic such as a provider's size alone may not necessarily be a reliable indicator that electronic cost reporting would impose a financial hardship since even the smallest SNFs and HHAs are quite likely to already be using computer equipment. Thus, we believe that an individualized review of each waiver request based on the totality of the provider's financial situation would be the most effective method for making determinations. Factors that we may consider in determining whether to grant a waiver include whether the provider has access to a computer, the provider's size, level of Medicare utilization, and financial status.

Regarding the commenters— concern that, like hospitals, few waivers will be granted for SNFs and HHAs, we wish to point out that the small number of electronic reporting waivers granted to hospitals is attributed to the small number of hospitals that have requested them. We have received only 10 waiver electronic reporting requests from hospitals (of approximately 7,000 hospitals required to file electronically) since we implemented electronic reporting. All 10 hospitals have been granted waivers. We note that hospitals must request the waiver every year. We anticipate receiving numerous requests from SNFs and HHAs. There are large differences in the financial structure between hospitals and long-term care providers. Hospitals provide many services that are not provided by SNFs and HHAs. Additionally, virtually all hospitals have, or have access to, computer equipment, which may or may not be the case for SNFs and HHAs. As we did with hospitals, we anticipate granting hardship waivers for providers with low Medicare utilization and

providers with reimbursement systems that would be too costly to program (for example, all inclusive rate providers who are not required to file electronically). Each waiver request will be handled on a case-by-case basis and waivers will be granted when a provider has documented appropriately its financial hardship.

We note that if a provider subject to the requirements and not granted a hardship exemption does not submit its cost report electronically, Medicare payments to that provider may be suspended under the provisions of sections 1815(a) and 1833(e) of the Act. These sections of the Act provide that no Medicare payments will be made to a provider unless it has furnished the information, requested by the Secretary, that is needed to determine the amount of payments due the provider under the Medicare program. Section 405.371(d) provides for suspension of Medicare payments to a provider by the intermediary if the provider fails to submit information requested by the intermediary that is needed to determine the amount due the provider under the Medicare program. The general procedures that are followed when Medicare payment to a provider is suspended for failure to submit information needed by the intermediary to determine Medicare payment are located in section 2231 of the Medicare Intermediary Manual (HCFA Pub. 13). Those procedures include timeframes for ''demand letters'' to providers. Demand letters remind providers to file timely and complete cost reports and explain possible adjustments of Medicare payments to a provider and the right to request a 30-day extension of the due date.

Comment. One commenter suggested that, to avoid unnecessary administrative costs and delays, the fiscal intermediary instead of HCFA should have responsibility for granting waiver requests.

Response. We believe that our process for making waiver determinations is the most efficient and will allow each provider seeking a waiver to receive an individualized review of its request. As explained later, we have extended the deadline for filing waiver requests. The revised process specifies that the waiver request, including supporting documentation, must be submitted to a provider's intermediary no later than 30 days after the end of the provider's cost reporting period. The intermediary will review the request and forward it, with a recommendation for approval or denial, to the HCFA central office within 30 days of its receipt of the request. HCFA central office will either approve or deny the request by response to the intermediary within 60 days of receipt of the request from the intermediary.

Comment. Some commenters expressed concern with the proposed deadline for filing waiver requests of 120 days before the end of the provider's cost reporting period. One commenter noted that the deadline should not be set before the end of the reporting period because the level of Medicare utilization can vary from month to month. Another commenter suggested that the time limits be modified to be more accommodating until HCFA has further experience with the impact of electronic cost reporting on SNFs and HHAs.

Response. We have reconsidered our proposed policy in light of these comments and the fact that we have decided to extend the due date for filing electronic cost reports in this final rule (as discussed under the section on ''Implementation Date''). We agree with the commenters that it is appropriate to allow providers a longer time period within which to submit waiver requests. We have revised § 413.24(f)(4)(v) to provide that a provider may submit a written request for delay or waiver with necessary supporting documentation to its intermediary no later than 30 days after the end of its cost reporting period.

Comment. One commenter suggested that in lieu of a waiver, we should allow the hardware and software costs as ''below the line'' cost expenses by modifying the Medicare cost report to allow the provider to enter the software costs directly into reimbursable costs and to treat the hardware similarly, as a capital expense.

Response. The use of electronic cost reporting software and the costs associated with it is similar to a provider hiring an accounting firm to complete its cost report. We do not make separate payments for these types of costs; rather we include the costs as administrative and general costs. Similarly, for those providers that have to purchase computer equipment, in accordance with existing regulations governing payment of provider costs, Medicare will pay for the cost of the equipment as an overhead cost.

Comment. One commenter inquired about the effect of the rule on hospital-based HHAs. The commenter asked if hospital-based facilities will be required to submit a separate cost report. Another commenter requested clarification as to whether providers under the prospective payment system would be required to file electronically. Specifically, the commenter asked that we clarify our statement in the proposed rule that a SNF that furnishes fewer than 1,500 Medicare covered days in a cost reporting period would not be subject to the electronic cost reporting requirement (60 FR 62238).

Response. The electronic cost reporting provision will only apply to those providers that are required to file a full Medicare cost report. Providers that are required to file less than a full cost report (that is, low or no Medicare utilization) will not file electronically but will be required to request a waiver of the requirement to file electronically. Hospital-based SNFs and HHAs file electronically through the hospital, would continue to do so, and would not file separately as a result of this regulation. We did not intend to exclude SNFs that are paid prospectively and that file their cost reports on Form 2540S. While § 413.321 defines the Form 2540S as a simplified cost reporting form, the form does not meet the definition of a less than full cost report as discussed above. Absent a waiver, these SNFs will be required to file their cost reports electronically. Software will be available from HCFA and from commercial vendors that meet the requirements for electronic filing.

Implementation Date

Comment. Commenters were concerned that the proposed implementation date for filing electronic cost reports beginning on or after October 1, 1995, was too aggressive and would not allow sufficient time for providers with short period cost reports to file electronically.

Response. We agree that the proposed implementation date should be revised. The new effective date will be timed to coincide with the completion of the installment of and training on the free software and electronic specifications. We anticipate that the software will be ready for distribution in time for providers to become accustomed to using it before they submit their cost reports for cost reporting periods ending on or after February 1, 1997. Thus, we are revising the implementation date to require SNFs and HHAs to begin filing their cost reports electronically for cost reporting periods ending on or after February 1, 1997. We believe that this revised implementation date will avoid prolonged extensions for short period cost reports. We also believe that providers with cost reporting periods ending on February 1, 1997 (and who thus must file their cost reports by June 30, 1997), will have ample time to do what is needed to file an electronic cost report by June 30, 1997.

Cost Reporting Software

Comment. One commenter inquired about how providers will be paid for the cost of the electronic cost reporting software. Other commenters questioned the adequacy of the software offered by HCFA and its efficiency in performing electronic filing. These commenters' concerns were based on the difficulties experienced by hospitals in using the cost reporting software provided by HCFA. Another commenter suggested that the software be available at least 6 months before the implementation date for electronic filing to allow providers time to install the software and train staff. Additionally, one commenter advised that free software should be available for SNFs under the prospective payment system. Finally, commenters suggested that we develop software for billing and for the Provider Cost Report Reimbursement Questionnaire (Form 339).

Response. HCFA will provide software, free of charge, to any provider that requests it. Alternatively, providers may purchase the software from any HCFA-approved software vendor. To obtain the free software, providers may contact their intermediaries or send a written request to the following address: Health Care Financing Administration, Division of Cost Principles and Reporting, Room C5–02–23, Central Building, 7500 Security Boulevard, Baltimore, MD 21244–1850. We note that, as with the cost of computer equipment, Medicare will pay for the cost of the software as an overhead cost through the cost report based on Medicare utilization.

Regarding commenters' concerns about the adequacy of the cost reporting software, we note that while there were some difficulties with application of the free software for hospitals, the hospital cost report is extremely complex and requires extensive reporting for a number of Medicare services that are not provided by SNFs and HHAs. Thus, we do not anticipate having similar types of problems with cost reporting software for SNFs and HHAs because these providers generally file less complicated cost reports. The free software will not be developed to compete with commercial software packages. Rather, the software offered by HCFA will enable a provider with access to a computer to meet the requirements by filing an electronic data set to the fiscal intermediary in order to generate a cost report. We expect that the software will be a series of input screens that are designed to assimilate the cost reporting forms. Once the prescribed data are entered, these same data can be forwarded to the intermediary to produce a completed cost report. As stated above, we anticipate that the software will be ready for distribution in time to allow providers to install the software and train staff.

While we do not currently require that providers submit bills in an electronic format, we strongly encourage electronic billing. We note that fiscal intermediaries can accept electronic bills prepared with commercially available software that meets Medicare specifications. Fiscal intermediaries also provide free software for submission of Medicare billing data. Providers should contact their intermediary's electronic billing department for information about this software. Additionally, we are currently in the process of developing a software package for the Form 339.

Audit Adjustments

Comment. One commenter questioned the provision in proposed § 413.24(f)(4)(iii), which requires that the fiscal intermediary must return the as-filed cost report to the provider for correction if it does not pass all specified edits. The commenter believed that requiring intermediaries to send rejected cost reports back to the provider would impose a burden because the provider would have to do a complete review of the cost report in order to identify and correct the error. The commenter suggested that we allow the intermediary discretion in determining whether to send a cost report back to the provider.

Response. This section provides that the intermediary must reject a cost report that does not pass all specified edits. This provision is not intended to prohibit the intermediary from making audit adjustments to the provider's cost report. Rather, an intermediary must reject a cost report that fails a ''level one'' edit (for example, when the settlement amount on the hard copy cost report and the amount contained in the electronic file are different). Cost reports that fail level one edits result in incorrect settlement data that cannot be corrected by the intermediary for legal reasons. The cost report is the submission of the provider and must maintain its originality throughout the cost report settlement process.

Comment. One commenter recommended that intermediaries not require providers to submit more than one hard copy of the cost report in addition to the electronic file.

Response. During a transition period, we will require providers to submit a hard copy of the completed full cost report forms in addition to the electronic file (as we did for hospitals). Requiring a hard copy will allow the provider and the intermediary to compare data on the hard copy cost report to data in the electronic file to ensure accuracy and proper programming. Once providers and intermediaries become accustomed to the use of the electronic cost reporting software, we will no longer require that a hard copy of the full cost report be filed. After the transition period, SNFs and HHAs subject to the electronic reporting requirement will be required to file a hard copy of the one-page settlement sheet, a statement of certain worksheet totals found in the electronic file, and a statement signed by their administrator or chief financial officer certifying the accuracy of the electronic file.

IV. Provisions of the Final Rule

In this final rule we are adopting the provisions as proposed with three revisions. Specifically, in response to a public comment, we are revising § 413.24(f)(4) (ii) and (iv) to change the implementation date. These sections now provide that, effective for cost reporting periods beginning on or after February 1, 1997, SNFs and HHAs must submit cost reports in a standardized electronic format. Additionally, we are revising § 413.24(f)(4)(v) to clarify that providers with low or no Medicare utilization may request a waiver of electronic cost reporting. We are making another revision to § 413.24(f)(4)(v) to specify that a provider may submit a written request for a delay or a waiver with necessary supporting documentation to its intermediary no later than 30 days after the end of its cost reporting period.

V. Impact Statement

We generally prepare a regulatory flexibility analysis that is consistent with the Regulatory Flexibility Act (RFA) (5 U.S.C. 601 through 612) unless we certify that a final rule such as this will not have a significant economic impact on a substantial number of small entities. For purposes of the RFA, all providers and small businesses that distribute cost-report software to providers are considered small entities. HCFA's intermediaries are not considered small entities for purposes of the RFA.

In addition, section 1102(b) of the Social Security Act requires us to prepare a regulatory impact analysis for any final rule that may have a significant impact on the operation of a substantial number of small rural hospitals. Such an analysis must conform to the provisions of section 604

of the RFA. For purposes of section 1102(b) of the Act, we define a small rural hospital as a hospital that is located outside of a Metropolitan Statistical Area and has fewer than 50 beds. We are not preparing a rural impact statement since we have determined, and certify, that this final rule will not have a significant impact on the operations of a substantial number of small rural hospitals.

As stated above, under §§ 413.20(b) and 413.24(f), providers are required to submit cost reports annually, with reporting periods based on the provider's accounting year. This final rule will require SNFs and HHAs, like hospitals, to submit their Medicare cost reports in a standardized electronic format. We anticipate that this requirement will take effect for cost reporting periods ending on or after February 1, 1997, meaning that the first electronic cost reports will be due June 30, 1997.

Currently, approximately 75 percent of all SNFs and HHAs submit a hard copy of an electronically prepared cost report to the intermediary. We believe that the provisions of this final rule will have little or no effect on these providers, except to reduce the time involved in copying and collating a hard copy of the report for intermediaries. In addition to the 75 percent of providers that currently use electronic cost reporting, this rule will not affect those providers that do not file a full cost report and, as stated above, will not be required to submit cost reports electronically.

This final rule may have an impact on those providers who do not prepare electronic cost reports, some of whom may have to purchase computer equipment, obtain the necessary software, and train staff to use the software. However, as discussed below, we believe that the potential impact of this final rule on those providers who do not prepare electronic cost reports will be insignificant.

First, a small number of providers that do not submit electronic cost reports may have to purchase computer equipment to comply with the provisions of this final rule. However, even among the 25 percent of SNFs and HHAs that do not submit electronically prepared cost reports, we believe that most providers already have access to computer equipment, which they are now using for internal record keeping purposes, as well as for submitting electronically generated bills to their fiscal intermediaries, for example. Thus, we do not believe that obtaining computer equipment will be a major obstacle to electronic cost reporting for most providers. For those providers that will have to purchase computer equipment, we note that, in accordance with current regulations governing payment of provider costs, Medicare will pay for the cost of the equipment as an overhead cost.

We recognize that a potential cost for providers that do not submit electronic cost reports will be that of training staff to use the software. Since most SNFs and HHAs currently use computers, we do not believe that training staff to use the new software will impose a large burden on providers. An additional cost will be the cost of the software offered by commercial vendors. However, providers could eliminate this cost by obtaining the free software from HCFA.

The requirement that hospitals submit cost reports in a standardized electronic format has been in place since October 1989. Since that time, the accuracy of cost reports has increased and we have received very few requests for waivers. Additionally, we have not received any comments from the hospital industry indicating that the use of electronic cost reporting is overly burdensome. We believe that electronic cost reporting will be equally effective for SNFs and HHAs, with the benefits (such as increased accuracy and decreased preparation time) outweighing the costs of implementation for most providers.

In conclusion, we have determined that this final rule will not have a significant effect on SNF and HHA costs because these providers will not be required to collect any additional data beyond that which the regulations currently specify; cost reporting software is available at no cost from HCFA to any provider that requests it; most SNFs and HHAs have some type of computer equipment through which they currently prepare electronic cost reports; and a waiver of the electronic cost reporting requirement will be available to providers for whom the requirement will impose a financial hardship. We note that, as with the cost of computer equipment, Medicare will pay for the cost of the software as an overhead cost through the cost report based on Medicare utilization. Therefore, SNFs and HHAs will only be affected to the extent that, absent a waiver, they will be required to submit cost reports in a standardized electronic format to their intermediary. A provider that does not comply with the provisions of this rule, as specified in the preamble, will be subject to sections 1815(a) and 1833(e) of the Act, which provide that no payments will be made to a provider unless it has furnished the information requested by the Secretary that is needed to determine the amount of payments due the provider under Medicare.

In accordance with the provisions of Executive Order 12866, this regulation was not reviewed by the Office of Management and Budget (OMB).

VI. Collection of Information Requirements

The overall information collection and recordkeeping requirements associated with filing HHA costs reports (HCFA Form 1728) have been approved by OMB through October 1997 (OMB approval number 0938–0022). Additionally, OMB has approved the overall information collection and record keeping requirement associated with filing SNF costs reports (HCFA Form 2540) through May 1999 (OMB approval number 0938–0463).

This final rule does not require SNFs and HHAs to report any information on the electronic cost report that is not already required in the Medicare cost reports currently submitted by these providers. Although this regulation does not impose any new information collection requirements per se, the new electronic format requires HCFA to resubmit the information collection requirements to OMB for approval.

We estimate that the number of hours each provider will save by submitting an electronically prepared cost report instead of manually preparing and photocopying the cost report will be about 4.5 hours for each affected HHA and 9 hours for each affected SNF. Assuming that approximately 25 percent of all SNFs and HHAs will be affected, that is, roughly 3,000 SNFs and 2,000 HHAs, we estimate that SNFs will save approximately 27,000 hours per year completing cost reports and HHAs will save about 9,000 hours per year.

This final rule does not need to be reviewed by OMB under the Paperwork Reduction Act of 1995.

List of Subjects in 42 CFR Part 413

Health facilities, Kidney diseases, Medicare, Puerto Rico, Reporting and recordkeeping requirements.

42 CFR part 413 is amended as set forth below:

PART 413—PRINCIPLES OF REASONABLE COST REIMBURSEMENT; PAYMENT FOR END-STAGE RENAL DISEASE SERVICES; OPTIONAL PROSPECTIVELY DETERMINED PAYMENT RATES FOR SKILLED NURSING FACILITIES

1. The authority citation for part 413 continues to read as follows:

Authority: Secs. 1102, 1861(v)(1)(A), and 1871 of the Social Security Act (42 U.S.C. 1302, 1395x(v)(1)(A), and 1395hh).

2. Section 413.1 is amended by redesignating paragraphs (a)(1)(ii) (C) through (J) as paragraphs (a)(1)(ii) (D) through (K), respectively, and adding a new paragraph (a)(1)(ii)(C) to read as follows:

§ 413.1 Introduction.

(a) *Basis, scope, and applicability.*

(1) *Statutory basis.* * * *

(ii) *Additional requirements.* * * *

(C) Sections 1815(a) and 1833(e) of the Act provide the Secretary with authority to request information from providers to determine the amount of Medicare payment due providers.

* * * * *

3. Section 413.24 is amended by redesignating existing paragraphs (f)(4)(i) through (f)(4)(iv) as paragraphs (f)(4)(ii) through (f)(4)(v); adding a new paragraph (f)(4)(i); and revising redesignated paragraphs (f)(4)(ii) through (f)(4)(v) to read as follows:

§ 413.24 Adequate cost data and cost finding.

* * * * *

(f) *Cost reports.* * * *

(4) *Electronic submission of cost reports.* (i) As used in this paragraph, ''provider'' means a hospital, skilled nursing facility, or home health agency.

(ii) Effective for cost reporting periods beginning on or after October 1, 1989, for hospitals, and cost reporting periods ending on or after February 1, 1997, for skilled nursing facilities and home health agencies, a provider is required to submit cost reports in a standardized electronic format. The provider's electronic program must be capable of producing the HCFA standardized output file in a form that can be read by the fiscal intermediary's automated system. This electronic file, which must contain the input data required to complete the cost report and the data required to pass specified edits, is forwarded to the fiscal intermediary for processing through its system.

(iii) The fiscal intermediary stores the provider's as-filed electronic cost report and may not alter that file for any reason. The fiscal intermediary makes a ''working copy'' of the as-filed electronic cost report to be used, as necessary, throughout the settlement process (that is, desk review, processing audit adjustments, final settlement, etc). The provider's electronic program must be able to disclose if any changes have been made to the as-filed electronic cost report after acceptance by the intermediary. If the as-filed electronic cost report does not pass all specified edits, the fiscal intermediary rejects the cost report and returns it to the provider for correction. For purposes of the requirements in paragraph (f)(2) of this section concerning due dates, an electronic cost report is not considered to be filed until it is accepted by the intermediary.

(iv) Effective for cost reporting periods ending on or after September 30, 1994, for hospitals, and cost reporting periods ending on or after, February 1, 1997, for skilled nursing facilities and home health agencies, a provider must submit a hard copy of a settlement summary, a statement of certain worksheet totals found within the electronic file, and a statement signed by its administrator or chief financial officer certifying the accuracy of the electronic file or the manually prepared cost report. During a transition period, skilled nursing facilities and home health agencies must submit a hard copy of the completed cost report forms in addition to the electronic file. The following statement must immediately precede the dated signature of the provider's administrator or chief financial officer:

I hereby certify that I have read the above certification statement and that I have examined the accompanying electronically filed or manually submitted cost report and the Balance Sheet Statement of Revenue and Expenses prepared by _____ (Provider Name(s) and Number(s)) for the cost reporting period beginning _____ and ending _____ and that to the best of my knowledge and belief, this report and statement are true, correct, complete and prepared from the books and records of the provider in accordance with applicable instructions, except as noted. I further certify that I am familiar with the laws and regulations regarding the provision of health care services, and that the services identified in this cost report were provided in compliance with such laws and regulations.

(v) A provider may request a delay or waiver of the electronic submission requirement in paragraph (f)(4)(ii) of this section if this requirement would cause a financial hardship or if the provider qualifies as a low or no Medicare utilization provider. The provider must submit a written request for delay or waiver with necessary supporting documentation to its intermediary no later than 30 days after the end of its cost reporting period. The intermediary reviews the request and forwards it, with a recommendation for approval or denial, to HCFA central office within 30 days of receipt of the request. HCFA central office either approves or denies the request and notifies the intermediary within 60 days of receipt of the request.

* * * * *

(Catalog of Federal Domestic Assistance Program No. 93.773, Medicare—Hospital Insurance; and Program No. 93.774, Medicare—Supplementary Medical Insurance Program)

Dated: September 27, 1996.

Bruce C. Vladeck,

Administrator, Health Care Financing Administration.

[FR Doc. 96–33093 Filed 12–31–96; 8:45 am]

BILLING CODE 4120–01–P

DEPARTMENT OF TRANSPORTATION

National Highway Traffic Safety Administration

49 CFR Part 571

[Docket No. 74–14; Notice 110]

RIN 2127–AG14

Federal Motor Vehicle Safety Standards; Occupant Crash Protection

AGENCY: National Highway Traffic Safety Administration (NHTSA), DOT.

ACTION: Final rule; technical amendment.

SUMMARY: On November 27, 1996, NHTSA published a final rule requiring vehicles with air bags to have new warning labels. The preamble to the notice stated that one of the labels, the removable label, would have the following statement: ''Children *Can* Be KILLED or INJURED by Passenger Air Bag.'' (emphasis added) Two other labels, the sun visor warning label and the child seat label, also include statements indicating that death or injury *can* occur. Due to a typographic error, the figure in the regulatory text for the removable label indicates that the label should read: ''Children *May* Be KILLED or INJURED by Passenger Air Bag.'' (emphasis added). This notice corrects that error.

DATES: *Effective Date:* The amendments made in this rule are effective January 2, 1997.

Petition Dates: Any petitions for reconsideration must be received by NHTSA no later than February 18, 1997.

ADDRESSES: Any petitions for reconsideration should refer to the docket and notice number of this notice and be submitted to: Administrator, National Highway Traffic Safety Administration, 400 Seventh Street, SW, Washington, DC 20590.

FOR FURTHER INFORMATION CONTACT: Mary Versailles, Office of Safety Performance Standards, NPS–31, National Highway Traffic Safety Administration, 400 Seventh Street, SW, Washington, D.C. 20590; telephone

(202) 366–2057; facsimile (202) 366–4329; electronic mail ''mversailles@nhtsa.dot.gov''.

SUPPLEMENTARY INFORMATION: On November 27, 1996, NHTSA published a final rule amending 49 CFR 571.208 to require vehicles with air bags to have new warning labels. The preamble to the notice stated that one of the labels, the removable label, would have the following statement: ''Children *Can* Be KILLED or INJURED by Passenger Air Bag.'' (emphasis added) Two other labels, the sun visor warning label and the child seat label, also include statements indicating that death or injury *can* occur. Due to a typographic error, the figure in the regulatory text for the removable label indicates that the label should read: ''Children *May* Be KILLED or INJURED by Passenger Air Bag.'' (emphasis added). This notice corrects that error.

Vehicles manufactured on or after February 25, 1997 (90 days after publication of the final rule) must be equipped with the new warning labels. Because NHTSA is aware that many manufacturers have begun preparations to comply with the new rule, and because it would be difficult for manufacturers to comply by February 25 if they were to start that process over again, NHTSA has decided to allow manufacturers to use either ''can'' or ''may'' in the text of the removable label until September 1, 1997. For vehicles manufactured on or after September 1, 1997, the removable label must use the word ''can.''

NHTSA finds for good cause that this final rule can be made effective in less than 30 days. This rule corrects a typographic error in the regulatory language of the November 27, 1996, final rule. This notice should therefore be effective on the same date as the earlier rule.

Rulemaking Analyses and Notices

Executive Order 12866 and DOT Regulatory Policies and Procedures

NHTSA has considered the impact of this rulemaking action under E.O. 12866 and the Department of Transportation's regulatory policies and procedures. This rulemaking document was not reviewed under E.O. 12866, ''Regulatory Planning and Review.'' This document is part of an action that was determined to be ''significant'' under the Department of Transportation's regulatory policies and procedures. However, this notice does not impose any new requirements on manufacturers. It simply corrects a typographic error.

Regulatory Flexibility Act

NHTSA has also considered the impacts of this final rule under the Regulatory Flexibility Act. I hereby certify that this rule will not have a significant economic impact on a substantial number of small entities. Further, this final rule will not alter the economic impacts of the November 1996 final rule. As explained above, this rule will not have an economic impact on any manufacturers.

Paperwork Reduction Act

In accordance with the Paperwork Reduction Act of 1980 (P.L. 96–511), there are no requirements for information collection associated with this final rule.

National Environmental Policy Act

NHTSA has also analyzed this final rule under the National Environmental Policy Act and determined that it will not have a significant impact on the human environment.

Executive Order 12612 (Federalism)

NHTSA has analyzed this rule in accordance with the principles and criteria contained in E.O. 12612, and has determined that this rule will not have significant federalism implications to warrant the preparation of a Federalism Assessment.

Civil Justice Reform

This final rule does not have any retroactive effect. Under 49 U.S.C. 30103, whenever a Federal motor vehicle safety standard is in effect, a State may not adopt or maintain a safety standard applicable to the same aspect of performance which is not identical to the Federal standard, except to the extent that the State requirement imposes a higher level of performance and applies only to vehicles procured for the State's use. 49 U.S.C. 30161 sets forth a procedure for judicial review of final rules establishing, amending or revoking Federal motor vehicle safety standards. That section does not require submission of a petition for reconsideration or other administrative proceedings before parties may file suit in court.

List of Subjects in 49 CFR Part 571

Imports, Motor vehicle safety, Motor vehicles.

In consideration of the foregoing, 49 CFR part 571 is amended as follows:

PART 571—FEDERAL MOTOR VEHICLE SAFETY STANDARDS

1. The authority citation for part 571 of title 49 continues to read as follows:

Authority: 49 U.S.C. 322, 30111, 30115, 30117, and 30166; delegation of authority at 49 CFR 1.50.

2. Section 571.208 is amended by revising S4.5.1(e) introductory text and by adding new paragraph (e)(iv) to read as follows:

§ 571.208 Standard No. 208, Occupant Crash Protection.

* * * * *

S4.5.1 *Labeling and owner's manual information.*

* * * * *

(e) *Label on the dash.* Each vehicle manufactured on or after February 25, 1997 that is equipped with an inflatable restraint for the passenger position shall have a label attached to a location on the dashboard or the steering wheel hub that is clearly visible from all front seating positions. The label need not be permanently affixed to the vehicle. This label shall conform in content to the label shown in Figure 7 of this standard, and shall comply with the requirements of S4.5.1(e)(2)(i) through S4.5.1(e)(2)(iv).

* * * * *

(iv) For vehicles manufactured before September 1, 1997, the label shown in Figure 7 may be modified by replacing the word ''can'' with the word ''may'' in the statement: ''Children can be killed or injured by passenger air bag.''

* * * * *

§ 571.208 [Amended]

3. Section 571.208 is amended by replacing figure 7 with a new figure 7 as follows:

L. Robert Shelton,

Associate Administrator for Safety Performance Standards.

BILLING CODE 4910-59-P

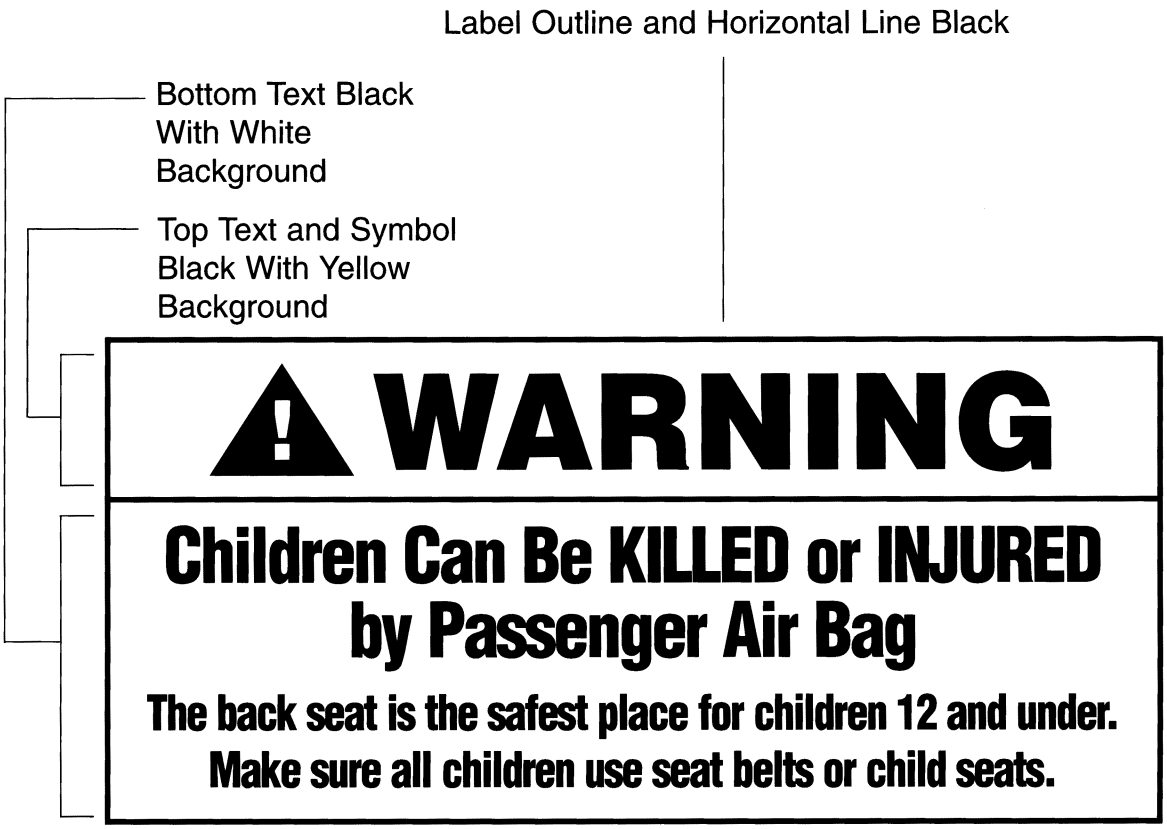

Figure 7. Removable Label on Dash.

[FR Doc. 96–33308 Filed 12–31–96; 8:45 am]
BILLING CODE 4910–59–P

DEPARTMENT OF COMMERCE

National Oceanic and Atmospheric Administration

50 CFR Part 229

[Docket No. 950605147–6368–05; I.D. 040996D]

RIN 0648–AH33

Final List of Fisheries for 1997

AGENCY: National Marine Fisheries Service (NMFS), National Oceanic and Atmospheric Administration (NOAA), Commerce.

ACTION: Final rule.

SUMMARY: In accordance with the Marine Mammal Protection Act of 1972, as amended (MMPA), NMFS updates its final List of Fisheries (LOF) for 1997. The LOF classifies fisheries as Category I, II, or III, based on their level of incidental mortalities and serious injuries of marine mammals. The LOF informs the public of the level of interactions with marine mammals in various U.S. commercial fisheries and which fisheries are subject to certain provisions of the MMPA, such as the requirement to register for Authorization Certificates. The registration of several fisheries under this program, referred to as the Marine Mammal Assessment Program (MMAP), has been successfully integrated with other existing registration or permitting systems. NMFS also amends the instructions for registration in part 229.

EFFECTIVE DATES: The amendments to part 229 are effective December 27, 1996. As of December 27, 1996, the effective period of the List of Fisheries for 1996 (60 FR 67063, Dec. 28, 1995) is extended to February 28, 1997. The changes to the List of Fisheries for 1997 are effective March 1, 1997.

ADDRESSES: Information and registration material for the region in which a fishery occurs, and reporting forms, may be obtained from the following addresses: NMFS, Northeast Region, One Blackburn Drive, Gloucester, MA 01930–2298, Attn: Sandra Arvilla; NMFS, Southeast Region, 9721 Executive Center Drive North, St. Petersburg, FL 33702; NMFS, MMAP, Protected Species Management Division, 501 W. Ocean Blvd., Suite 4200, Long Beach, CA 90802–4213; NMFS Northwest Region, 7600 Sand Point Way NE, Seattle, WA 98115, Attn: Permits office; NMFS–PMRD, P.O. Box 22668, 709 West 9th Street, Juneau, AK 99082.

Comments regarding burden-hour estimates for collection-of-information requirements contained in this final rule should be sent to Chief, Marine Mammal Division, Office of Protected Resouces, 1315 East-West Hwy, Silver Spring, MD 20910 and Office of Management and Budget (OMB), Washington, D.C. 20502 (Attention: NOAA Desk Officer).

FOR FURTHER INFORMATION CONTACT: Robyn Angliss, Office of Protected Resources, 301–713–2322; Douglas Beach, Northeast Region, 508–281–9254; Charles Oravetz, Southeast Region, 813–570–5301; James Lecky, Southwest Region, 310–980–4015; Brent Norberg, Northwest Region, 206–526–6140; Steven Zimmerman, Alaska Region, 907–586–7235.

SUPPLEMENTARY INFORMATION: Publication of the LOF, which places all U.S. commercial fisheries into three categories based on their levels of incidental mortality and serious injury of marine mammals, is required by section 118 of the MMPA. Background information on the history of the LOF and a discussion of the fishery classification criteria are provided in the proposed LOF for 1997 (61 FR 37035, July 16, 1996). The fishery classification criteria are specified in the implementing regulations for section 118 of the MMPA (50 CFR part 229).

Registration Requirements for Vessels Participating in Category I and II Fisheries

Vessel or gear owners participating in Category I or II fisheries must register under the MMPA, as required by 50 CFR 229.4. Registration under the MMPA is administered by NMFS regional offices. Thus, the procedures and fees associated with registration differs between Regions. Under 50 CFR 229.4, the granting and administration of Authorization Certificates is to be integrated and coordinated with existing state and Federal fishery license, registration, or permit systems and related programs, whenever possible. Alternative registration programs have been or are being implemented in the Alaska Region, Northwest Region, and Northeast Region. Special procedures and instructions for registration in these Regions are provided in the next section (see Region-Specific Registration Requirements).

If the granting and administration of authorizations has not been integrated with state licensing, registration, or permitting systems, owners of vessels or gear must obtain registration packets from the NMFS Region in which their fishery operates. NMFS Regional Offices will endeavor to send these packets to known participants in Category I or II fisheries; however, it is the responsibility of fishers to ensure that these packets are obtained and submitted to NMFS at least 30 days in advance of fishing. The registration packet will typically include an MMAP registration form, a list of those fisheries in each region that require authorization in order to incidentally kill or injure marine mammals (Category I and II fisheries), and an explanation of the management regime, including instructions on reporting requirements. The registration packet may also include an explanation of the changes in the fishery classification criteria, guidance on deterring marine mammals, and a reminder that intentional lethal takes of marine mammals are no longer permitted except under certain specific conditions.

Vessel owners must submit the registration form and a $25 fee to the NMFS Regional Office in which their fishery operates. NMFS will send the vessel owner an Authorization Certificate, program decals, and reporting forms within 60 days of receiving the registration form and application fee.

If the granting and administration of authorizations under 50 CFR 229.4 is not integrated or coordinated with existing fishery licenses, registrations, or related programs, requests for registration forms and completed registration forms should be sent to the NMFS Regional Offices listed in this notice under **ADDRESSES.**

Procedures for registering in each NMFS region are outlined in the following section.

Region-Specific Registration Requirements for Category I and II Fisheries

Alaska Region MMAP Registration for 1997

In 1997, registration in the MMAP for fishing vessels or set net permit holders participating in Alaska Category II fisheries will be integrated with the Alaska Department of Fish and Game (ADF&G) system for registering commercial vessels and permitting set net fishing. The information required for MMAP registration will be obtained by NMFS directly from ADF&G and will be automatically incorporated into the NMFS MMAP database. Vessel owners must indicate on their ADF&G vessel registration form which Category II fishery they intend to participate in during 1997. If a fishery is not indicated, the vessel will not be registered in the MMAP. Registered vessel owners and set net operators will then be sent an MMAP certificate for 1997, an MMAP decal, a program information sheet, marine mammal injury and mortality reporting forms, and a written statement to be signed and returned to NMFS indicating whether any marine mammals had been injured or killed during the vessel's commercial fishing operations in 1996. The vessel or set net MMAP certificate will not be considered valid until the statement indicating any injuries or mortalities to marine mammals during 1996 fishing operations is returned to NMFS. There will be no fee charged for MMAP registration for 1997.

Northwest Region (NWR) MMAP Registration for 1997

In the Northwest Region, the States of Washington and Oregon have agreed to continue their assistance in issuing Authorization Certificates for Category I and II fishers as part of the fishing license renewal process. There will be no additional charge to the fishers for this service, and the registration instructions will remain the same for 1997 as they were in 1996.

Southwest Region (SWR) MMAP Registration for 1997

SWR is in the process of integrating MMAP registration for Category I and II fisheries that occur in California with the California Department of Fish and Game's commercial fishery permit registration program. However, this integration will not be completed before 1998. For this reason, Category I and II vessel owners in California will continue to register with SWR. In December 1996, vessel owners who engaged in a Category I or II fishery in 1996 will receive a registration packet in the mail. Any Category I or II vessel owner who has not received an application package by December 1, 1996, may request one from NMFS SWR (see **ADDRESSES**).

Southeast Region (SER) MMAP Registration for 1997

SER is in the process of integrating MMAP registration for Category I and II fisheries that occur in the southeast U.S. Atlantic Ocean with existing fishery registration programs. However, this integration will not be completed before 1998.

The only state fisheries in Category I or II that are under SER jurisdiction occur in North Carolina. State fishers in North Carolina should expect to receive a registration packet in the mail. If a fisher plans to participate in any state or Federal fishery in Category I or II and a registration packet is not received, fishers should contact SER (see **ADDRESSES**).

Northeast Region (NER) MMAP Registration for 1997

NER is integrating MMAP registration with state and Federal permitting processes for the following fisheries: Gulf of Maine, U.S. mid-Atlantic lobster fishery, Atlantic squid, mackerel, butterfish trawl, and the New England multispecies sink gillnet fishery (including but not limited to species as defined in the Northeast Multispecies Fishery Management Plan, dogfish, and monkfish). The Category I sink gillnet fishery includes regulated and non-regulated fisheries. Participants in the

federally regulated segment, the multispecies sink gillnet fishery, will be registered in the MMAP automatically through integration with the Federal permit process. Fishers who do not hold a Federal multispecies sink gillnet permit and who fish with sink gillnet for non-regulated species (dogfish and monkfish) are required to submit an MMAP registration form and processing fee to NMFS.

Federally permitted participants in the squid, mackerel, butterfish trawl fishery will be registered in the MMAP automatically through integration with the Federal permit process. Fishers who do not hold a Federal squid, mackerel, butterfish trawl permit and who trawl for those species are required to submit an MMAP registration form and processing fee to NMFS.

State and Federally permitted participants in the lobster trap/pot fishery will be registered in the MMAP automatically through integration with other permitting processes. The integrated registration process is expected to be completed prior to the effective date of this final rule. NMFS expects to issue information packages to permitted fishers by March 1, 1997.

For all participants in fisheries for which NMFS has integrated registration with permitting processes, the requirements to submit a registration form and fee and to post an MMAP decal on the vessel will be waived in 1997. A general certificate will be issued and will only be valid if presented with a valid state or Federal fishing permit.

All fishers who plan to participate in any other Category I and II fisheries in the NER must register under the MMAP by submitting a registration or renewal form and the processing fee to NMFS.

Reporting: Vessel owners or operators, or fishers (in the case of non-vessel fisheries), in Category I, II, or III, fisheries must comply with 50 CFR 229.6 and report all incidental mortality and injury of marine mammals during the course of commercial fishing operations to NMFS Headquarters or appropriate NMFS Regional Office. ''Injury'' is defined in 50 CFR 229.2 as a wound or other physical harm. In addition, any animal that ingests fishing gear or any animal that is released with fishing gear entangling, trailing, or perforating any part of the body is considered injured and must be reported. Instructions for submission of reports are found at 50 CFR 229.6(a).

Observers: Fishers participating in Category I and II fisheries may be required, upon request, to accommodate an observer aboard their vessels. Observer requirements may be found at 50 CFR 229.7.

Responses to Comments

NMFS received 15 comments on the proposed LOF. Many comments were lengthy and raised many points of concern. Key issues and concerns are summarized and responded to as follows:

General Comments

Comment 1: Timely data flow from the regional Fishery Science Centers is important. In some cases, incidental take data are 2 or more years behind. In addition, NMFS should focus on developing updated stock assessments along with revised Potential Biological Removal (PBR) levels. Failure to provide timely information on mortality or abundance can result in incorrect categorization of fisheries and unnecessary risk to marine mammal populations.

Response: NMFS agrees that the LOF should strive to classify commercial fisheries based on the best scientific data available and that NMFS should provide, when possible, updated mortality and serious injury estimates and updated PBR levels for each LOF.

Estimates of incidental mortality and serious injury that are based on observer data and used in the LOF are typically 2 years old. For instance, the proposed LOF for 1998, which will be developed in early 1997, will be based on mortality and serious injury estimates from 1996. This data lag is unavoidable because of the time required for entry and analysis of observer data and the time required to propose and finalize a new LOF. NMFS is aware that some estimates of mortality and serious injury of marine mammals in observed fisheries are more than 2 years old, will continue to work towards improving both the estimates and the timeline in which they are provided.

New draft Stock Assessment Reports (SARs), which include revised estimates of stock-specific and fishery-specific mortality and serious injury, and revised abundance estimates and associated PBR levels, are expected to be made available to the public in the near future. If final SARs are not available when the proposed LOF for 1998 is developed, NMFS will base the proposed LOF for 1998 on the information provided in the draft SARs.

Comment 2: Several commenters believed that the reclassification of a fishery from Category III to either Category II or I in the LOF would automatically result in the implementation of an observer program for that fishery.

Response: The final regulations implementing section 118 of the MMPA require that vessels in fisheries classified in Category I or II to provide accommodations for observers if requested by NMFS (50 CFR 229.7(b)). Neither the regulations nor the MMPA require that NMFS place observers on all vessels participating in all fisheries classified in Category I or II. While information collected by observers aboard vessels usually provides the most accurate description of the level of serious injury and mortality to marine mammals incidental to commercial fishing operations, monitoring of commercial fishing operations may also be accomplished via alternative monitoring programs.

Comment 3: Annual reporting requirements need to be more specific about the condition of live marine mammal releases. NMFS needs to gather detailed information on ''released unharmed,'' ''injury,'' ''serious injury,'' or ''incidental mortality.'' A simple check box with ''yes'' or ''no'' to the question of killed or injured will continue to create problems with NMFS' assessment of the estimated level of ''serious injury and/or incidental mortality'' with any accuracy. NMFS has yet to determine what distinguishes an injury from a serious injury and how it relates to survivability of released marine mammals. Both NMFS and Congress acknowledge that encounters with marine mammals do not always result in ''injury'', ''serious injury'', or ''incidental mortality''.

Response: As stated by the commenter, NMFS recognizes that not all accidental encounters between commercial fishing vessels or gear and marine mammals result in injuries, serious injuries, or mortalities.

NMFS has provided considerable guidance as to what constitutes an injury, because fishers must be provided with criteria in order to determine whether an incidental interaction with a marine mammal constitutes an injury and whether a report of interaction needs to be submitted to NMFS. An injury is defined in 50 CFR 229.2 as

> * * * a wound or other physical harm. Signs of injury to a marine mammal include, but are not limited to, visible blood flow, loss of or damage to an appendage or jaw, inability to use one or more appendages, asymmetry in the shape of the body or body position, noticeable swelling or hemorrhage, laceration, puncture or rupture of eyeball, listless appearance or inability to defend itself, inability to swim or dive upon release from fishing gear, or signs of equilibrium imbalance. Any animal that ingests fishing gear, or any animal that is released with fishing gear entangling, trailing or perforating any part of the body will be considered injured regardless of the absence of any wound or other evidence of an injury.

The definition of serious injury is more general. It is recognized that not all incidental injuries to marine mammals are serious or are likely to result in a mortality. Serious injury is defined in 50 CFR 229.2 as ''any injury that will likely result in mortality.''

NMFS anticipates that the types of injuries that constitute serious injuries may be species-specific and fishery-specific. Interim guidelines were developed by the Northeast Region in order to address the serious injury and mortality of large whales incidental to the lobster pot fishery. The response to comment 19 describes these interim guidelines. National guidelines for determining which injuries should be considered serious and likely to result in mortality will be developed by NMFS in 1997 and will be made available for public comment.

Comment 4: Observers should be placed on vessels when NMFS has questions about the level of serious injury and/or incidental mortality in a particular fishery. Current fishery designations do not reflect the realities of fishery interactions; they only reflect what fisheries NMFS has chosen to concentrate on observing thus far.

Response: The classification of commercial fisheries in the LOF is based on current information on the level of serious injury and mortality of marine mammals incidental to commercial fisheries. NMFS disagrees that current fishery designations only reflect what fisheries NMFS has observed to date. There are several fisheries whose classification in Category II has been justified by using something other than observer data, such as the Southeast Alaska salmon purse seine fishery, the North Carolina stop net fishery, and the mid-Atlantic coastal gillnet fishery.

Comment 5: Time should be spent in the productive capacity of research and development for a technological solution in the areas of documented take.

Response: NMFS agrees. Each year, NMFS allocates funding to improve gear technology in order to reduce serious injuries and mortalities of protected species.

Comment 6: A Category I listing focuses considerable attention on the fishery and gear types in question. This attention translates into regulatory and legislative action to mandate nontrivial measures to reduce or eliminate the risk to the endangered species in question. Such attention and actions should be commensurate with the demonstrated real risk, so that unwarranted costs and hardships are not imposed on people and businesses that have no impact on the whales.

Response: Fisheries placed in Category I in the LOF are those that have been determined to have frequent incidental serious injuries and mortalities of marine mammals. Because the fishery classification criteria are defined relative to a stock's PBR level and because the PBR level for some marine mammal stocks, particularly endangered marine mammal stocks, are very low, some commercial fisheries that incur a few (i.e., 1 to 5) serious injuries or mortalities of these marine mammals, will be classified in Category I.

The LOF itself does not impose changes in fishery management that impact commercial fishers. Generally, reduction of serious injuries and mortalities incidental to commercial fisheries will be addressed by the Take Reduction Team (TRT) process. The MMPA requires that NMFS convene TRTs that include representatives of all impacted constituents. These Teams develop Take Reduction Plans (TRPs) which have the short-term objective of reducing serious injury and mortality levels to the PBR levels of the involved stocks, and the long-term objective of reducing serious injury and mortality levels to the Zero Mortality Rate Goal. Proposed regulations resulting from TRPs will be published in the Federal Register, and comments on the methods that NMFS proposes to use to reduce interactions between marine mammals and commercial fisheries will be solicited at that time.

Comment 7: For practical purposes, Congress apparently intended Category I to indicate a frequent incidence of serious injury and mortality. However, in a sleight of language that makes citizens so wary of their government, the definition of ''frequent'' makes it possible to call something ''frequent'' that any practical person would call remote.

Response: Pursuant to the MMPA, Category I, II, and III fisheries are those that incur frequent, occasional, or have a remote likelihood of incidental serious injuries and mortalities of marine mammals, respectively. Congress did not provide a definition of ''frequent,'' ''occasional,'' or ''remote likelihood'' in the MMPA. The final regulations implementing section 118 defined Category I, II, and III fisheries and thereby defined ''frequent,'' ''occasional,'' and ''remote likelihood'' based on the number of marine mammals seriously injured or killed incidental to commercial fishing operations relative to the marine mammal stock's PBR level.

NMFS' fishery classification criteria allow the agency to consider the level of serious injury and mortality incidental to commercial fishing on a stock-specific basis using a ''weakest stock'' approach. The population level and status of each marine mammal stock is specific to that stock. Thus, the level of impact each marine mammal population can withstand while allowing the population to attain its optimum sustainable population (OSP) level is also stock-specific. For instance, because the estimated minimum population size of North Atlantic right whales is 295 animals, the number of animals that can be removed from the population by commercial fishing while allowing the population to attain OSP is 0.4. In contrast, because the minimum population size of the Oregon/Washington coastal stock of harbor seals is 28,322, the number of animals that can be removed from this population by commercial fishing while allowing the population to attain OSP is 1,699. Thus, a small take of right whales (under 1 per year) would have a significant negative effect on the population, while a similar level of take of the Oregon/Washington stock of harbor seals would not. NMFS' chosen approach to the classification criteria allows it to focus management actions where fishery interactions have a significant negative effect on a marine mammal population.

Comment 8: If the MMPA programs succeed in protecting marine mammals, their numbers will increase, and logically, so will fishery interactions with them. It is not only possible, but virtually guaranteed, that no matter what commercial fishermen do to minimize interactions, they will interact with more and more animals until an active deterrent is in general use.

Response: The fishery classification criteria in the final regulations implementing section 118 are defined relative to a marine mammal stock's PBR level. Thus, if the population of a particular stock of marine mammal increases, the PBR level would be expected to increase as well. Consequently, commercial fisheries could anticipate that a higher number of incidental serious injuries and mortalities could be authorized, provided that the level relative to the PBR level remains constant or decreases.

Comment 9: It appears that marine mammal takes by fishermen of other countries fishing in proximity to the concerned stocks will be considered as ''uncontrollable mortality'' and will come ''off the top'' before NMFS sets the PBR level.

Response: The calculation of a PBR level for transboundary marine mammal stocks was considered on a case-by-case basis. General guidelines for migratory and non-migratory stocks were developed but were not applied in those instances where the guidelines were inconsistent with what is known about the biology of the marine mammal stock of concern. For migratory stocks, PBR level calculations are generally based upon the portion of the stock found in waters under U.S. jurisdiction or the proportion of the year that a migratory stock spends in waters under U.S. jurisdiction, and mortalities from foreign fisheries were generally included in the estimate of total mortality but not in the estimate of mortality incidental to U.S. fishing operations. For non-migratory stocks, the PBR level was calculated based on the abundance estimate of the stock residing in U.S. territorial waters and the Exclusive Economic Zone (EEZ). Restricting PBR level calculations in such a manner was considered appropriate because NMFS can only regulate incidental mortality and serious injury with respect to fishing activities under U.S. jurisdiction. Mortality and serious injury incidental to foreign fishing operations outside the U.S. EEZ generally do not affect the status of the stock (strategic vs. non-strategic) and are not included in the estimate of fishing mortality; thus, incidental takes of marine mammals by foreign fishing vessels should not affect the classification of U.S. commercial fisheries and will not affect the ability of U.S. commercial fishers to compete with foreign fishers.

Comments on Fisheries in the Northeast Region

Comments on the Gulf of Maine Mackerel Trawl Fishery

Comment 10: The commenter questioned NMFS' allegation that significant effort is not expected in the Gulf of Maine mackerel trawl fishery. As fisheries are coming under effort restrictions for groundfish in the Gulf of Maine, more effort is likely in herring and mackerel fisheries, as these stocks are more abundant. Although this fishery may not merit a separate listing from the combined trawl fishery for squid, mackerel, and butterfish, attention needs to be paid to the likely increase in effort.

Response: Since a new listing for the Atlantic squid, mackerel, and butterfish trawl was created in the 1996 LOF, the listing for the Gulf of Maine mackerel trawl fishery is duplicative and has been deleted in the 1997 LOF. The squid, mackerel, butterfish trawl fishery is retained in Category II in the 1997 LOF. NMFS anticipates that additional information on effort in this fishery will be available from fishing vessel and dealer logbooks. NMFS agrees that there is potential for expansion of the mackerel trawl fishery since the stock is currently considered underexploited. However, because the economic viability of this fishery is uncertain, effort may not increase appreciably in the near future.

Fishers who hold a Federal permit for the squid, mackerel, butterfish fishery will be registered automatically under the new integrated registration system. Fishers who participate in the state component of this fishery must obtain registration materials from NMFS and must submit the completed registration and a $25 fee to be authorized under the MMPA (see instructions under Registration).

Comments on the Finfish Aquaculture Fishery

Comment 11: Harbor seals should be added as interacting with the Finfish Aquaculture Fishery.

Response: The addition of harbor seals as an interacting stock is due to the entanglement of harbor seals in aquaculture pens. NMFS has no further information to indicate any marine mammal stocks other than harbor seals interacting with this fishery during the 1990–1994 period.

Offshore Monkfish Bottom Gillnet Fishery

Comment 12: The offshore monkfish bottom gillnet fishery should be divided into components of the Northeast Multispecies sink gillnet fishery and the U.S. Mid-Atlantic coastal gillnet fishery.

Response: NMFS agrees. This change will impact several vessels that were using sink gillnet gear but were not required to be permitted under the Multispecies Fishery Management Plan (FMP) because they were targeting monkfish and/or dogfish, which are not currently included under the Multispecies FMP. Monkfish was listed as a target species in the 1996 LOF for the Northeast Multispecies sink gillnet fishery but not for the Mid-Atlantic gillnet fishery. Fishers who hold a Federal permit for the multispecies sink gillnet fishery will be registered automatically under the new integrated registration system. Fishers who target only monkfish and do not have a Federal multispecies permit must obtain registration materials from NMFS and must submit the completed registration and a $25 fee to be authorized under the MMPA (see instructions under Registration).

Comment 13: It was not reflected in the proposed LOF that any interactions between the offshore monkfish bottom gillnet fishery and marine mammals were recorded in the course of observation from the observer program, nor were anecdotal reports provided. Why is the monkfish bottom gillnet fishery being subjected to the requirements of the MMPA? If there have been reports of interactions with marine mammals in the course of the fishing operations of the sink gillnet dogfish and monkfish fisheries, then these reports should be presented in the Federal Register as sufficient to classify them as the proposed rule states. Without that documentation, this fishery is being classified for unjust and unsound scientific reasoning until such fact and proof come forward.

Response: NMFS recognizes that quantitative information was not provided in the proposed LOF in support of the combination of the offshore monkfish bottom gillnet fishery with the New England multispecies sink gillnet fishery in Category I or with the U.S. mid-Atlantic coastal gillnet fishery in Category II, depending on the geographic location in which the fisher operates. As indicated in the proposed LOF, the offshore monkfish bottom gillnet fishery should be combined with the New England multispecies sink gillnet fishery or the U.S. mid-Atlantic coastal gillnet fishery, primarily because the offshore monkfish gillnet fishery uses tied-down sink gillnet gear, which is similar to the gear type used for flounder in the multispecies fishery, and thus, is an extension of current fisheries already in existence and is not a separate fishery. Vessels occasionally set strings of nets for monkfish in the same area and on the same trip as strings of nets set for groundfish. Thus, because the gear is similar, there is no practical distinction between the fisheries.

Comments on the Classification of the Lobster Pot Fishery

A. Comments regarding the data used to classify the fishery.

Comment 14: What is the definition of ''serious injury'' as it pertains to the lobster pot fishery classification and who determines whether the injury was serious?

Response: See response to comment 3 regarding the definitions of ''injury'' and ''serious injury'' under 50 CFR 229.2.

National guidelines for determining what constitutes a serious injury have not been established. The Atlantic Scientific Review Group (SRG), which

advises the agency on the science used by NMFS to manage marine mammals in the Atlantic Ocean, recommended that all instances where marine mammals are released alive from fishing gear be considered serious injuries until documentation to the contrary has been produced.

In the absence of national guidelines and because interim criteria for serious injury were urgently needed to address the impact of the lobster pot fishery to right and humpback whales, the Northeast Region utilized interim criteria for determining what constitutes a serious injury to large whales. The criteria developed by the Northeast Region and used in the classification of the lobster fishery were not as conservative as the Atlantic SRG has recommended.

According to the definition of injury, animals entangled in fishing gear, or released with gear trailing, are considered injured. For the analysis of the level of impact incidental to the lobster pot fishery, an injury was considered serious if it met any of the following criteria: (a) Entanglement did or could interfere with feeding (e.g., cinching loop around snout or gear through baleen); (b) entanglement did or could interfere with mobility (e.g., whale anchored, flippers pinned, flukes weighed down, gear apparently preventing whale from getting to the surface to breathe); or (c) entanglement resulted in substantial wounds (e.g., deep cuts, tendon/ligament or bone damage), that may result in loss of appendages or debilitating infection. A secondary consideration used in the analysis was whether the growth of a juvenile animal could cause further injury by a cinching entanglement on any part of its body as it increased in size.

In some cases, records of serious injury entanglements used for this analysis described whales which were disentangled. In cases of significant entanglements, the injuries were considered serious unless NMFS could confirm with reliable information that the whale was completely freed of gear, and that the whale did not incur residual serious injuries.

If necessary, these guidelines will be changed to ensure consistency with the national guidelines.

Comment 15: The lobster fishery was placed in Category I because of one entanglement of a right whale in 26 years. Because this constitutes a rare interaction, it is inappropriate to place this fishery in Category I.

Response: NMFS disagrees that the interaction between northern right whales and the lobster pot fishery should be considered rare. The lobster fishery was placed in Category I in the proposed LOF based on 1 serious injury or mortality of a northern right whale in 5 years. This animal was first seen entangled in lobster gear on December 21, 1993, and stranded dead in July of 1995. In addition, since the publication of the proposed LOF, NMFS identified a second record (July 9, 1993) as a serious injury of a right whale in lobster pot gear. Thus, the placement of the lobster pot fishery in Category I in this final LOF is based on two mortalities or serious injuries of right whales, one that was first seen on 12/21/93 and a second that was first seen on 7/9/93 (see Table 1).

NMFS considered only data from 1990 to 1994 in this analysis. NMFS used 21 records of serious injury and mortality incidental to the lobster fishery for this analysis (see Table 1). Of the records NMFS considered suitable for this analysis, lobster pot gear was responsible for the serious injury or mortality of two right whales, 9 humpback whales, and 7 minke whales. In addition, NMFS has records of two additional humpback whales and one minke whale that could be seriously injured; these records are currently under evaluation. NMFS also has records of 25 other whale entanglements collected between 1990 and 1994 that were excluded from this analysis due to insufficient information on gear type, species identification, or degree of injury. It is likely that some percentage of those entanglements represent serious injury and/or mortality due to entanglement in lobster gear.

NMFS is using opportunistic data to classify the lobster pot fishery. Opportunistic reports provided by sources such as NMFS, the New England Aquarium, and private citizens cannot be extrapolated to provide a total estimate of serious injury and mortality incidental to this fishery. The true level of incidental serious injury and mortality incidental to this fishery is unknown but may be higher than that reported here.

The total observed serious injury or mortality of right whales incidental to the lobster pot fishery for 1990 to 1994 is 0.4 animals per year; the PBR level for the northern right whale stock is 0.4 animals. Thus, because the total fishery-related incidental mortality and serious injury for all commercial fisheries is above 10 percent of the PBR level for this stock, and because the average take for the past 5 years is greater than or equal to 50 percent of the PBR level (2 animals in 5 years equals 0.4 animals per year; this is equivalent to the PBR level for this stock), placement in Category I is justified, based on impact to northern right whales.

In addition to the serious injury and mortality of northern right whales incidental to the lobster pot fishery, 11 humpback whales were seriously injured or killed by lobster pot gear between 1990 and 1994. This level of serious injury and mortality of humpback whales averages to 1.8 animals per year, which represents 19 percent of the PBR level for that stock (PBR level = 9.7). This level of incidental serious injury and mortality would justify placement of the lobster pot fishery in Category II. In addition to the records of serious injuries and mortalities of large whales in lobster gear used in this analysis, NMFS has data which show that large whale (right, humpback, minke) entanglement in U.S. lobster gear has occurred historically and has continued since 1994, which is the last year of data used in this analysis.

Refer to the response to comment 7 for a discussion of the stock-specific approach of the fishery classification criteria.

TABLE 1: NMFS RECORD OF SERIOUS INJURY AND/OR MORTALITY OF LARGE WHALES INCIDENTAL TO THE GULF OF MAINE, U.S. MID–ATLANTIC LOBSTER TRAP/POT FISHERY FOR 1990–1994*

Date Sighted**	Species	Sighting Location	Description of gear and evidence of serious injury/mortality	Outcome***
7/9/93	North Atlantic right whale.	Georges Bank	Lobster buoy, warp, swivel plus swordfish driftnet; tail of juvenile cut 8″ on both sides from lobster line; partially healed and re-cut by net; wrapped in net; partially disentangled 7/9 by driftnet fisher; remainder removed 8/7 by disentanglement team ; re-sighted 9/93 in NY in shallow water; presumed dead from entanglement injuries.	Serious injury.

TABLE 1: NMFS RECORD OF SERIOUS INJURY AND/OR MORTALITY OF LARGE WHALES INCIDENTAL TO THE GULF OF MAINE, U.S. MID–ATLANTIC LOBSTER TRAP/POT FISHERY FOR 1990–1994*—Continued

Date Sighted**	Species	Sighting Location	Description of gear and evidence of serious injury/mortality	Outcome***
12/21/93	North Atlantic right whale.	Georgia	Lobster trap trawl rig (line with secondary lines spliced in perpendicularly); mostly floating poly line, also sinking poly/dacron line w/wooden toggle; green poly groundline imbedded 3″ into bone at right flipper insertion & through baleen; 6–8 wraps around flipper; dark warp on back; juvenile; stranded dead 7/95 in RI.	Serious injury.
4/10/90	Humpback whale	Massachusetts	Lobster gear; fisher observed free-swimming whale dragging hundreds of yards of gear and cut most off.	Injury+.
6/18/90	Humpback whale	Massachusetts	Flipper of free-swimming whale entangled in lobster warp; trailing blue and orange float; may have had line through mouth.	Serious injury.
7/4/90	Humpback whale	New Hampshire	Lobster line & orange buoy; whale may have shaken some of the pots; juvenile; last seen trailing buoy.	Serious injury.
8/1/91	Humpback whale	Massachusetts	Gillnet, lobster (including pot) & tuna gear, grappling hook; trailing 50' of netting; gear around mouth & tail; emaciated & tired; could not swim with tail; freed 8/11/91 by disentanglement team; juvenile; in bad shape; sighted over next week swimming slowly.	Serious injury.
8/24/91	Humpback whale	New York	Lobster trap trawl rig; at least 12 pots & 2 high-flyers; lobster line over flipper and fluke,; swimming impaired/atypical; distressed/labored breathing; mostly stayed just below surface; heading toward land; juvenile animal; disentangled.	Serious injury.
10/3/91	Humpback whale	Massachusetts	Lobster trap trawl w/2 buoys; line tight around tail; free-swimming; not in immediate danger but close to shore; cut free by local lobsterman (not his gear) & headed out to see; unknown whether trailing gear; juvenile.	Injury+.
4/22/93	Humpback whale	New Hampshire	Lobster line around tail stock & flukes; whale thin; unknown if gear trailing; probably same whale freed by disentanglement team on 4/24/93; thin and weak; some healing around line; juvenile animal.	Serious injury.
6/13/93	Humpback whale	New Hampshire	Pot warp wrapped around flippers & body; some bleeding on right; line trailing; calf of the year; fresh wounds.	Serious injury.
8/11/93	Humpback whale	Maine	Lobster & sink gillnet; reported by lobsterman; gear over back & through mouth; anchored; partially disentangled by diver; left gear through mouth at hinge; whale swam away; juvenile animal.	Serious injury.
8/19/93	Humpback whale	Maine	Lobster gear in mouth & around tail stock; semi-anchored; labored breathing/wheezing.	Serious injury.
8/11/94	Humpback whale	Maine	Probable single trap lobster gear wrapped around or draped over flipper; heavy density of pots in area; at least partially disentangled by lobsterman (not his gear).	Serious injury.
6/25/90	Minke whale	Maine	Lobster gear around tail stock; line around pectoral fins and in mouth; stranded alive as a result of entanglement injuries; old entanglement; emaciated; heavy barnacle load; lesions; tail deformed; juvenile.	Serious injury.
8/16/90	Minke whale	Massachusetts	Trailing lobster gear; looked bad	Injury+.
8/28/91	Minke whale	Maine	Lobster trap lines through mouth and around tail; lobsterman found dead whale in his gear; juvenile animal.	Mortality.
10/23/91	Minke whale	New Hampshire	Juvenile whale held in place by multiple lines leading to lobster trap trawls; partially disentangled.	Serious injury.
8/22/92	Minke whale	Maine	Juvenile whale found floating dead; wrapped in lobster gear	Mortality.
9/21/92	Minke whale	Maine	Line from lobster gear strapping mouth shut	Mortality.
9/3/93	Minke whale	New Hampshire	Net and lobster gear around tail and trailing; labored/struggling	Serious injury.
7/2/94	Minke whale	Maine	Lobster lines (3 pair traps involved); line through mouth; one line around lower jaw; chafing on tail; whale brought up dead with traps.	Mortality.

* In addition to these 21 reports, NMFS also received 25 records of large whale entanglement for the 1990–1994 period that were excluded from this analysis due to insufficient information on degree of injury, gear type, or species identification. It is likely that some percentage of these entanglement records represent serious injury or mortality due to lobster gear. The 25 records that were excluded include right, humpback, minke, fin, and unidentified whales.

** The date sighted and location provided in the table are not necessarily when or where the serious injury or mortality occurred; rather, this information indicates when and where the whale was first seen entangled in the gear that ultimately resulted in serious injury or death to the animal. Recent records indicate that the difference between these two points can be substantial for both time and location.

*** See response to comment 19 for a description of the guidelines used to determine what constituted a serious injury with respect to large whale takes in this fishery.

+ This injury may constitue a serious injury. NMFS is evaluating these records to determine the extent of the injury and whether it should be considered a serious injury.

Comment 16: The commenter included a list of entanglements and indicated that it is inappropriate to propose to reclassify the lobster pot fishery based on the one right whale entanglement because the gear cannot be traced to the lobster fishery. The gear recovered from the animal in question was identified as ''unidentified line''.

Response: The list to which the commenter refers was a draft list that was not prepared by NMFS. Information provided to NMFS by public commenters is very helpful but cannot be used to justify the placement of a fishery in a specific category in the LOF until the information has received scrutiny and approval by NMFS scientific, management, and headquarters staff.

The whale that the commenter refers to was sighted on December 21, 1993, off Georgia. When the gear was first removed from the whale, it was described as lobster gear, although it consisted only of line and a wooden toggle. When the gear was transferred to and examined by NMFS, this initial assessment was confirmed based on the type of line and arrangement of knots and splices. Since the publication of the proposed LOF, the gear has been examined and the assessment confirmed by a lobster industry representative. Consequently, the final reclassification of the lobster fishery into Category I is based on two serious injuries or mortalities of northern right whales. As previously stated, if no right whales had been seriously injured or killed, a classification in Category II would be justified based on the 9 serious injuries or mortalities of humpback whales and 6 serious injuries or mortalities of minke whales.

Comment 17: The commenter questions the statistical validity of the calculations by which the conclusion was reached that the lobster fishery exceeded the threshold limits for Category I. Because of the small numbers involved, a statistically valid analysis would indicate that there is a very high probability that the lobster fishery does not exceed the threshold for Category I.

Response: A statistical analysis of this data is not necessary, because the reported serious injury and mortality of two right whales in 5 years (1990–1994) results in a minimum average annual level of serious injury and mortality of 0.4 per year (2/5 = 0.4). Fisheries placed in Category I are those that have incidental serious injury and mortality of a particular stock of marine mammals that is greater than or equal to 50 percent of the PBR level for that stock. In the case of right whales, PBR level = 0.4, so 50 percent of the right whale PBR level = 0.2. Because two serious injuries or mortalities of right whales were reported in this fishery during 5 years, the minimum serious injury/mortality level of 0.4 right whales per year qualifies the lobster fishery as a Category I fishery.

Comment 18: The commenter indicated that it was inappropriate to classify the New England lobster pot fishery based on the recovery of pot gear from a right whale in waters off Georgia.

Response: Although the entangled right whale was first sighted swimming off Georgia, the initial location of entanglement cannot be determined. The whale was identified as an individual that, in addition to using the calving grounds off Georgia and Florida, has also been seen in Cape Cod Bay and in the Bay of Fundy. Whales have been known to swim great distances trailing gear.

Comment 19: NMFS was very conservative in its use of entanglement reports and this may result in an underestimate of the entanglement rate.

Response: NMFS agrees that the rate of annual serious injury and mortality determined through stranding and other reports probably underestimates the total level of serious injury and mortality that occurs incidental to this fishery. NMFS uses stranding and other reports to provide a minimum rate of serious injury and mortality incidental to particular commercial fisheries. This minimum rate cannot be extrapolated to a total estimate of annual serious injury and mortality.

Comment 20: Given the size of the lobster pot fishery and the very few reports of any interaction with whales over a twenty-six year period, logic would dictate that the lobster fishery is best described as having a remote likelihood of interaction. In reality, given all the lines that have always been present in the water for all these years, and the total lack of any significant interaction with whales, we believe the lobster fishery has been a very friendly neighbor to the whales.

Response: See response to Comment 15.

Comment 21: Most experts on whales do not believe that the lobster fishery merits a Category I designation. While some may voice concern with regard to vertical buoy lines going to the surface, they admit that the entanglement possibility is a rare occurrence. They also cannot explain how a whale can get entangled in such line.

Response: See response to comment 15.

Comment 22: Whale watch boat captains report that they have seen schools of whales ''feeding'' and ''frolicking'' among buoy lines and have never seen one become entangled.

Response: NMFS appreciates the reports that are received from whale watch boat captains, as they may provide information on relative seasonal distribution of the animals. The observation provided by the commenter documents that whales are known to use areas where lobster gear is fished. However, few of the entanglements that eventually lead to serious injury or mortality are observed at the time of initial occurrence. Many of the sightings of entangled whales either anchored in or trailing gear come from whale watch vessels, and these reports are valuable to NMFS.

See response to Comment 15 for additional discussion.

Comment 23: The elevation of the lobster pot fishery to Category I is supported by the information on large whale entanglements.

Response: NMFS agrees.

B. Comments Regarding the Combination of the Inshore and Offshore Lobster Trap/Pot Fisheries, the Description of the Lobster Trap/Pot Fishery and the Overlap with Documented Ranges of Marine Mammals.

Comment 24: The breadth and scope of the range of the lobster pot fishery is neither documented nor described in sufficient detail so as to distinguish the area of the fishery most likely to have interactions with the marine mammals of concern. Without this distinction, there is great assumption without sufficient scientific support to lump all participants and areas involved in this fishery into Category I.

Response: In a future LOF, NMFS may investigate whether it is possible to separate certain geographic segments of the lobster fishery relative to potential for whale entanglement. Data are not currently available to conduct this analysis. Most of the quantitative distribution surveys concentrate on shelf-edge rather than nearshore waters. Some qualitative sighting data are available in addition to historic records from whaling stations. NMFS' strategy for separating geographic segments of the lobster fishery would involve conducting an analysis of information on whether marine mammals known to become entangled in lobster gear occur in waters where and when the fishery occurs and then attempting to determine whether the rate of occurrence is sufficiently low to reduce the probability of entanglement. Many of the whale entanglements in lobster gear involve juvenile animals. Juvenile whales tend to explore inshore areas

and have been known to swim up into rivers (e.g., Delaware, Susquehanna, and Potomac Rivers). Humpback whales, in particular, have often been sighted feeding very close to shore and inside harbors.

Comment 25: A tremendously large portion of the fishery operates in near shore, shallow waters, inside the documented range of the marine mammals mentioned in the Federal Register notice, making this an absurd and unnecessary administrative burden on these fishermen with registration requirements.

Response: See response to comment 24.

Comment 26: The inshore and offshore components should be combined into a single fishery. The differences in gear that is used in the inshore and offshore fishery for lobster is neither significant enough to affect the potential to kill or seriously injure marine mammals, nor is the marine mammal distribution such that either inshore or offshore gear has a greater likelihood of entangling marine mammals.

Response: The relative potential for serious injury or mortality of marine mammals in various types of lobster gear is unknown. Very little information is available that describes the behavior of the whales which resulted in entanglement, particularly for those entanglements that occur at depth. It may be possible to separate out certain fisheries that occur in bays or sounds if it can be determined that marine mammal species that are known to become entangled in lobster gear do not occur in those areas. However, that information is not available at this time. See response to Comment 25 for additional discussion.

Comment 27: The proposed LOF indicated that the decision to combine the inshore and offshore lobster pot fisheries is based on ''new information received about the prosecution of the lobster fishery.'' Contrary to the implication in the Federal Register notice, the practical distinction between the offshore and inshore lobster pot fisheries is not based on the distinction between state waters and the EEZ. The proposed LOF is erroneous in stating that the number of pots and number and size of associated lines and surface gear increase as distance from shore increases.

Response: The description in the proposed LOF was intended to refer to the number of traps fished in a string and the number of traps fished per vessel, not to the total number of traps fished inshore versus offshore. NMFS recognizes that the size of the fleet that fishes a considerable distance from shore in the EEZ is much smaller than that which fishes closer to shore in the EEZ and in state waters.

Comment 28: Although there are no sharp or practical distinctions between the gear types and vessel sizes used in the inshore lobster pot fishery and the offshore lobster pot fishery, there are sharp geographic distinctions that can be made, particularly in coastal New Hampshire and Maine. Because there has been only one right whale sighting inside the 100m bathymetric contour (excluding Jeffreys Ledge), the available data support a classification of Category III for the lobster fishery that occurs in the State waters of New Hampshire and Maine. In addition, although there are right whale aggregations at the Great South Channel and Cape Cod Bay/Stellwagen Bank/Jeffreys Ledge and in the lower Bay of Fundy and Browns Bank on the Scotian Shelf, there are large areas of inshore lobster grounds in between where the data suggest that the risk of serious injury/mortality from entanglement in lobster gear is non-existent.

Response: NMFS disagrees with the commenter's interpretation of right whale distribution. More than one right whale has been sighted inside the 100m contour. Although concentrations of right whales apparently only exist in certain areas of the Gulf of Maine, the whales likely transit many of the other areas at some point while moving between concentration areas. Information from satellite tracking indicates whales may cover large distances over short periods of time. See response to Comments 24 and 26 for discussion of geographical separation of the lobster fishery. Absent the evidence of right whale serious injury and mortality, the evidence of humpback and minke whale mortality and serious injury from 1990–1994 in the areas of Maine and New Hampshire to which the commenter refers would support a Category II listing rather than Category III.

Comment 29: Due to its geographical location and fishing methods employed, a practical operational distinction separates Long Island Sound from other waters where the lobster fishery is prosecuted. To remain consistent with plans for a separate fishery management area in Long Island Sound, and because right whales, humpback whales, and minke whales do not occur in Long Island sound, the lobster pot fishery in Long Island Sound should be separated from the U.S. mid-Atlantic Inshore Lobster Trap/Pot fishery and identified as a separate fishery in Category III. It makes no sense to have inshore Long Island Sound lobster pot fishermen from Connecticut or New York comply with the same registration requirements as imposed on lobstermen who actually fish in New England waters inhabited by endangered cetaceans. Specifically, lobstermen fishing exclusively in the waters of Long Island Sound west of a line running from Watch Hill, RI, to Orient Point, NY, should be excluded from the Category I designation.

Response: See response to Comments 24, 25, and 26. NMFS does not have good information on the extent to which whales use Long Island Sound. However, humpback, minke, right, and fin whales have been sighted inside the line mentioned by the commenter. Most sighting surveys conducted in the western U.S. Atlantic Ocean did not cover inshore waters such as Long Island Sound, Delaware Bay, and Chesapeake Bay; rather, effort was concentrated on the continental shelf. NMFS may consider a geographic separation of the lobster fishery in a future LOF.

Comment 30: The lobster pot fishery should be restricted in areas of New England where endangered whales feed and mate. Recategorizing the territory that the whales inhabit from Category III to Category I would be beneficial to the endangered types of whales. It is a tragedy when any of these whales are entangled in trap lines, and enough have died already.

Response: Reclassification of the lobster fishery will not result directly in additional protection for marine mammals. Any such measures will be developed utilizing other management measures such as the promulgation of regulations in order to implementat the Large Whale TRP.

C. Comments on the Use of Alternate Management Regimes and Monitoring Programs.

Comment 31: Several commenters supported the use of monitoring systems, such as enhanced stranding and disentanglement network reporting, or additional gear marking requirements, in lieu of the implementation of an observer program for the lobster pot fishery. Other alternatives include the use of shipboard and aerial surveys to monitor fishing activity and whale distributions, particularly in critical habitat areas and known summer ranges in the northern Gulf of Maine. In addition, observer programs are unlikely to result in an increased understanding of interactions between marine mammals and lobster gear, as many entanglements may occur when the vessel is not present.

Response: NMFS agrees that alternatives to traditional observer

programs are likely to be more effective in monitoring marine mammal serious injuries or mortalities incidental to the lobster pot fishery. Such an alternative observer program is likely to include some of the components recommended, such as aerial surveillance, enhanced reporting of entanglements, etc. Although NMFS may schedule some low level of observer coverage in this fishery, the agency anticipates that several suggestions for alternative monitoring programs may be recommended by the Large Whale TRT. This Team, which consists of representatives of the Federal government, affected state governments, environmental groups, and the affected commercial fisheries, is charged with developing the Large Whale TRP by early 1997.

Comment 32: NMFS should develop an approach for monitoring serious injuries and mortalities of large whales in the lobster pot fishery which allows fishermen to become partners in the effort to protect this species, rather than victims in pursuit of what may be an unattainable goal.

Response: NMFS agrees. Representatives of the commercial lobster pot fishery currently participate in the Large Whale Take Reduction Team, which is charged with developing a plan that will reduce incidental serious injuries and mortalities of large whales. NMFS anticipates that many thoughtful, productive methods for addressing this issue will result from these meetings.

D. Comments on Coordinating Registration Under the MMAP with Existing State or Federal Registration Systems.

Comment 33: All lobstermen required to register under the MMPA (Category I and II) should be registered via an integration of state lobster licensing lists with NMFS MMPA registration requirements. If we allow our data processing systems managers to collaborate on this issue, we can avoid an enormous redundancy in applications for, and administration of, the required permits.

Response: NMFS agrees. Integration of registration under the MMPA with registration in existing Federal and state permitting systems greatly reduces the amount of paperwork that must be completed by the commercial fisher and handled by NMFS. Because of the reduced paperwork burden on NMFS, an integrated system often results in a reduction or elimination of the $25 fee otherwise required for registration under the MMPA. The NER will endeavor to integrate the registration of the commercial lobster pot fishers with state and Federal permitting systems.

Comment 34: Integration of registration with the state fishery registration system of Maine will be difficult, if not impossible, because licensing issues are controlled by the Legislature and coordination would require the passage of law, and because of the expense of registering 7,000 commercial lobster fishers.

Response: Integration of state registration systems with registration under the MMPA would not necessarily require that individual states change their licensing practices. NMFS will work closely with the states to develop an integrated registration program that causes the least impact to the state fishery management programs while ensuring that the legislative mandates of registration under the MMPA are fulfilled.

Comments on Other Fisheries

Comment 35: There has been a recent increase in effort in fishing for hagfish in the Gulf of Maine. This is a staked gear fishery that may bear monitoring for potential interactions with marine mammals.

Response: NMFS agrees that effort in the hagfish pot fishery has increased in New England waters and that the range of the fishery may overlap that of marine mammals known to become entangled in pot gear. Unlike the American eel fishery, the hagfish fishery in the Gulf of Maine primarily occurs in waters too deep for staked gear. The hagfish fishery uses gear that is rigged similar to lobster gear but uses barrels instead of pots. NMFS currently has no records of serious injuries or mortalities of marine mammals incidental to this fishery. NMFS expects to examine the locations and manner in which this fishery is prosecuted in order to determine whether the fishery should be proposed for reclassification based on analogy with the lobster pot fishery or other fisheries.

Comment 36: NMFS should pay additional attention to the proliferation of aquaculture permits in the Gulf of Maine, as some gear may pose an entanglement risk to marine mammals. For example, if top-down systems of shellfish aquaculture are used, they may pose the same types of entanglement risk that is posed by lobster gear. In addition, blue fin tuna grow-out activities should be monitored, as serious problems with entanglement of small cetaceans and pinnipeds have occurred in the deeper waters of Australia, where this technology is already in use.

Response: NMFS appreciates the information on the Australian tuna project. Federal bluefin tuna regulations do not currently authorize aquaculture or grow-out operations. Such activities may be conducted on a limited scale with a specific letter of authorization consistent with the Atlantic tuna regulations (50 CFR part 285) and the provisions of 50 CFR 600.745. U.S. Coast Guard and Army Corps of Engineers requirements also would apply. Depending on the scale and duration of the activity, an Environmental Assessment could be required, in which case the impacts on protected species would be assessed and public comment would be sought. The referenced pilot project is currently being examined in this regard.

Comment 37: The Atlantic Ocean, Caribbean, and Gulf of Mexico pelagic longline fisheries for swordfish, tuna, and sharks should be separated into three separate fisheries in the LOF. This action has been requested since 1991. Separation of the Atlantic longline fisheries would be consistent with NMFS' proposed action to separate the Oregon swordfish/blue shark surface longline fishery into the Oregon swordfish floating longline fishery and the Oregon blue shark floating longline fishery. In addition, separation of these fisheries by fishing region would facilitate establishing a standardized process for monitoring effort, estimating serious injury and incidental mortality rates, and evaluating the effectiveness of reduction methods.

Response: The proposed LOF for 1997 clearly indicates that the rationale for separating the two longline fisheries permitted by the state of Oregon is to remain consistent with changing state registration practices (see 61 FR 37035; especially 37038). This change was not proposed based on a change in the level of serious injury or mortality of marine mammals incidental to the fishery. NMFS will consider making changes to the LOF to parallel current state or federal fishery registration practices, as it greatly facilitates integration of state or federal fishery registration with registration in the MMAP.

At this time, there is no scientific or management reason to separate the Atlantic Ocean, Caribbean, and Gulf of Mexico pelagic longline fishery into separate fisheries in the LOF. The fishery is managed under the Atlantic Tunas Convention Act (ATCA) consistent with the recommendations of the International Committee for the Conservation of Atlantic Tunas (ICCAT), which has a very broad scope. This stems from the wide distribution of the target species in the pelagic longline

fishery, which migrate seasonally between the Northern U.S. Atlantic Ocean, the Caribbean, and the Gulf of Mexico. The marine mammals incidentally seriously injured and killed in this fishery are also found across all of these areas. Although some vessels operate on a more regional basis, the fishery typically follows the target species across these different regions. Because the fishery statistics are already collected on a regional basis, dividing the pelagic longline fishery into different segments would not alter the way in which effort and take data are monitored. The TRP involving this fishery does not affect the fishery in the Gulf or Caribbean, and observers are placed onboard these fisheries to monitor target species catch for the purposes of reporting to ICCAT, regardless of the fishery's classification under the MMPA. Therefore, maintaining this as one fishery does not place undue burden upon the fishery or undue ''blame'' for marine mammal takes in a regional area. Alternatively, if the fishery was divided into three separate fisheries, many fishers would have to register under two or three different fisheries.

Comment 38: The category designation of the Atlantic Ocean, Caribbean, and Gulf of Mexico pelagic longline fishery should be reassessed based on more accurate information. The current classification is based on pilot whale interactions which occur when the pilot whale preys upon dead tuna. If the reported number of hooks was used for calculating this estimate, NMFS must consider that a hook in the Gulf of Mexico and a similar hook at the Grand Banks have a very different likelihood of interacting with a particular marine mammal species.

Response: The estimated level of effort used in determining the total estimated serious injury and mortality of marine mammals incidental to this fishery is based on the number of sets (not hooks) and is the same data set used for estimating levels of catch for target species used by NMFS to report to ICCAT. Pilot whales and other species known to interact with this fishery occur in all areas where the fishery is prosecuted. For the purpose of the LOF, it is immaterial whether the serious injury or mortality occurred as a result of predation or attempted predation or if the serious injury or mortality occurred as a result of some other action on the part of the marine mammal. New information on the level of incidental serious injury and mortality in this fishery was not provided in the draft SARs for 1996, and thus information on the level of marine mammal serious injury and mortality in the pelagic longline fishery is unlikely to be available for the development of the proposed LOF for 1998. Constituents interested in obtaining more recent information should provide public comments on the draft SARs for 1996.

Comment 39: The category III designation for the Gulf of Maine, U.S. Mid-Atlantic tuna, shark, and swordfish hook and line/harpoon fishery should be reevaluated. As NMFS noted in the proposed LOF, information may be available to confirm the type of gear that entangled a humpback whale near Jeffrey's Ledge in 1995. These sources of information should be investigated.

Response: NMFS may revisit the classification of this fishery in the proposed LOF for 1998. At that time, NMFS hopes to have additional documentation on several entanglement records and on which segments of this fishery present an entanglement risk to marine mammals. The record to which the commenter refers documents the entanglement of a humpback whale in a bait gillnet set for live bait to be used in the tuna hand line fishery. While this entanglement could be considered an injury, NMFS determined that the entanglement did not constitute a serious injury, as the buoy line was apparently draped over the whale's flipper rather than wrapped around it.

Comment 40: Several of the gillnet and trap fisheries are proposed to remain in Category III in the absence of data indicating interactions, despite the fact that all of these fisheries are using gear types known to interact with marine mammals in areas where the fishing effort overlaps with marine mammal species that are known to become entangled in those types of gear. Lack of observer coverage or the extremely slow pace of data flowing from the Northeast Fisheries Science Center should not become a bar to providing monitoring of these fisheries.

Response: NMFS has no new information on the level of serious injury and mortality of marine mammals incidental to the majority of these fisheries at this time. New information on the level of serious injuries and mortalities of marine mammals incidental to the U.S. mid-Atlantic coastal gillnet fishery and the North Carolina inshore gillnet fishery is likely to become available by June 1997. These data will be evaluated and used, if appropriate, to propose changes to the LOF for 1998.

NMFS will reevaluate other fisheries in a future proposed LOF as data become available.

Comments on the Definitions of Various U.S. North Atlantic Trawl Fisheries

Comment 41: While the divisions and category designations of the North Atlantic trawl fisheries are generally supported, because the Gulf of Maine, South Atlantic, and Gulf of Mexico Herring Trawl fishery may co-occur with pilot whales and may be interacting with harbor porpoise, this fishery may need to be considered for designation as a Category II fishery.

Response: The herring trawl fishery which is currently listed in Category III is a coastal herring trawl fishery. At this time, NMFS has no evidence indicating that marine mammals have been seriously injured or killed incidental to this fishery.

Comment 42: The estimated number of five vessels in the Gulf of Maine, South Atlantic, and Gulf of Mexico herring trawl fishery may not be correct, as there have been reports of a larger number of vessels fishing in the Jeffrey's Ledge area.

Response: No updates on the number of participants are available for this final LOF. NMFS will update the tabular listing of number of participants in each fishery and the list of marine mammal stocks involved for the proposed LOF for 1998.

Comments on Fisheries in the Southwest Region

Comment 43: Reclassification of the California squid purse seine fishery to Category II is supported based on the increase in fishing effort, the presence of pilot whales in the area, and historical evidence of serious injury and mortality in the fishery.

Response: NMFS agrees. The fishery has been placed in Category II.

Justification for the Categorization of Commercial Fisheries

The following are justifications for the final categorization of commercial fisheries into Category I, II, or III based on the classification scheme defined in the final rule implementing section 118 (60 FR 45086, August 30, 1995). Justifications are presented only for those fisheries addressed in the proposed LOF for 1997 (61 FR 37035, July 16, 1996).

Commercial Fisheries in the Atlantic Ocean

U.S. Atlantic Tuna Purse Seine Fishery

As discussed in the proposed LOF for 1996, humpback and minke whales have been encircled by tuna purse seines. However, the whales were released and did not incur injury or mortality. Thus, no changes in the

classification of this fishery were proposed. In 1996, NMFS observers recorded that eight marine mammals were encircled incidental to this fishery. All animals incidentally encircled were released alive and uninjured. Since NMFS observers have recorded the encirclement of marine mammals, NMFS will carefully monitor this fishery to determine why marine mammals are being encircled, and will propose that the fishery be reclassified if serious injuries or mortalities become a concern.

This listing replaces a listing for the bluefin tuna purse seine fishery, which had been inadvertently omitted, and is made more general to include additional target species such as yellowfin tuna.

Gulf of Maine Mackerel Trawl Fishery

This fishery is a Category III state fishery that uses similar gear to target the same species as targeted in the Atlantic squid, mackerel, and butterfish trawl fishery. A separate listing of the Gulf of Maine mackerel trawl fishery is duplicative of the Atlantic squid, mackerel, butterfish trawl listing and is hereby deleted from the LOF. Commercial fishers participating in the state fishery for mackerel should, therefore, register under the MMPA as a Category II fishery (see information under Registration).

Finfish Aquaculture Fishery

NMFS has received four reports of harbor seal serious injury and mortality incidental to this fishery between 1990–1994. These data result in an average of 0.8 mortalities of harbor seals per year. Although the actual level of serious injury and mortality in this fishery is unknown, the reported serious injury and mortality level is less than 1 percent of the PBR level for the harbor seal. Therefore, this fishery is retained in Category III. The harbor seal (Western North Atlantic stock) is hereby added as a species which incurs injury and/or mortality incidental to the finfish aquaculture fishery.

U.S. North Atlantic Coastal Gillnet Fisheries

The southernmost boundary of the Northeast multispecies sink gillnet fishery and the northernmost boundary of the Mid-Atlantic gillnet fishery are modified to be consistent with the Multispecies Fishery Management Plan (FMP). This boundary extends south from the southern shoreline of Long Island along 72° 30′ W. Long. This change eliminates an overlap in the vicinity of Rhode Island and Martha's Vineyard.

Offshore Monkfish Bottom Gillnet

This fishery is divided geographically and placed with two other gillnet fisheries. The northern portion of the fishery is absorbed into the New England multispecies sink gillnet fishery in Category I and the southern portion with the Mid-Atlantic gillnet fishery in Category II. The monkfish fishery uses bottom gillnet gear that has been observed to cause mortality of marine mammals. In addition, several of the areas where bottom gillnet gear is used to target monkfish are known to be high-use areas for marine mammals.

Gulf of Maine, U.S. Mid-Atlantic Lobster Trap/Pot Fishery

Two records of serious injury or mortality of northern right whales, 7 records of serious injury and/or mortality of minke whales, and 10 records of serious injury and mortality of humpback whales were reported in this fishery from 1990–1994. These data represent a serious injury and mortality rate of 0.4 (100 percent of PBR level) per year for right whales, 1.8 (19 percent of PBR level) per year for humpback whales, and 1.4 (7 percent of PBR level) per year for minke whales. The above rates are greater than 1 percent but less than 50 percent of the PBR level for humpback and minke whales, but greater than 50 percent of the PBR level for right whales. Therefore, this fishery is placed in Category I in the 1997 LOF.

Opportunistic reports of free-swimming or stranded animals entangled in lobster pot gear were used to justify the placement of this fishery in Category I. However, it should be noted that opportunistic reports of this type provide a minimum estimate of mortality due to a particular source. These data cannot be extrapolated to provide a total estimated level of serious injury or mortality.

Northern right whale, humpback whale, and minke whale are added as marine mammal stocks that incur injury and/or mortality incidental to the lobster trap/pot fishery.

Trawl Fisheries

In the proposed LOF for 1997, NMFS requested public comments on alternative definitions of the trawl fisheries in the Northeast to better reflect current fishing practices. No public comments providing additional information on the fisheries were received. In a future LOF, NMFS may propose to redefine several of the trawl fisheries according to gear type rather than target species to parallel current fishery management practices and to facilitate more efficient data analysis.

U.S. Atlantic Large Pelagics Pair Trawl Fishery

A petition to consider pair trawl gear as an authorized gear type in the Atlantic tuna fishery was denied in 1996 because the tuna stocks the fishery targets are either fully- or over-utilized at this time (61 FR 48661, September 16, 1996). Because this fishery has not been authorized under ATCA (16 U.S.C. 971 et seq.), it has been removed from the LOF. Should the fishery be authorized in the future, NMFS will review the level of serious injury and mortality that occurred incidental to this fishery between 1992 and 1996 to determine the appropriate classification in the LOF.

Commercial Fisheries in the Pacific Ocean

Oregon Swordfish Floating Longline Fishery

The swordfish longline fishery is being separated from the Oregon blue shark longline fishery to ensure that registration under the MMPA remains consistent with the existing state licensing systems. This fishery will be retained in Category II.

Oregon Blue Shark Floating Longline Fishery

The blue shark longline fishery is being separated from the Oregon swordfish longline fishery to ensure that registration under the MMPA remains consistent with the existing state licensing systems. This fishery will be retained in Category II.

California Squid Purse Seine Fishery

No observer data are available for consideration in classification of this fishery. Between 1989 and 1995, California squid purse seine fishers reported short-finned pilot whale harassment during deterrence attempts, but there were no accounts of pilot whales being injured or killed either by deterrence or gear. The California squid purse seine fishery is currently classified as a Category III fishery. However, the Pacific Scientific Review Group, established under section 117 of the MMPA, recommended that the squid purse seine fishery be monitored with an observer program because of documentation of previous interactions between this fishery and short-finned pilot whales and a lack of current information about marine mammal mortalities and serious injuries incidental to this fishery.

Short-finned pilot whales were once common off Southern California, especially near Santa Catalina Island (Barlow et al. 1995). In early spring, short-finned pilot whales occurred in

inshore waters of California, coincident with the arrival of spawning squid, their main prey source. Dohl et al. (1980) estimated that a resident population of 400 short-finned pilot whales with a seasonal increase of up to 2000 individuals occurred in California waters. Short-finned pilot whales essentially disappeared from the area after the strong 1982–83 El Nino event and few sightings were made between 1984–92 (Barlow et al. 1995). However, short-finned pilot whales appear to have returned to California waters as indicated by recent sighting events and incidental mortality in the drift gillnet fishery for thresher shark and swordfish (average annual mortality = 20). Results from ship surveys in 1993 off California indicate that the estimated abundance of short-finned pilot whales in California/Oregon/Washington is approximately 1,000 animals (NMFS unpublished data). Barlow et al. (1995) concluded that the California/Oregon/Washington short-finned pilot whale population was a ''strategic'' stock under the MMPA.

Historically, incidental mortality of pilot whales occurred in the squid purse seine fishery in southern California. Twelve pilot whales were observed and reported entangled incidental to this fishery during the 1980 season (Miller et al. 1983). Miller et al. (1983) also reported that pilot whales were occasionally shot in the squid purse fishery when lethal deterrence was legal. Heyning and Woodhouse (1994) analyzed stranding data between 1975–90 and documented that 14 short-finned pilot whales stranded or were found floating dead (most during the late 1970s). They concluded that these pilot whales were probably incidentally killed in the squid purse seine fishery. All animals that were examined had stomachs full of market squid: none of those stranded had evidence of bullet holes, and commercial squid boats were reported to have been working those areas at the time.

Currently, the majority of the purse seine vessels that purse seine offshore California for mackerel, tuna, and anchovy (a Category II fishery) use the same gear to fish for squid in the winter off southern California (California Department of Fish and Game, unpublished data). Although the number of purse seine vessels has remained relatively stable in southern California with approximately 65 squid purse seine vessels in operation, over the last few years, squid purse seine effort and landings have increased.

The regulations implementing section 118 classify all fisheries based on the best available information on incidental mortality and serious injury of marine mammals. In the absence of reliable information indicating the frequency of incidental mortality and serious injury of marine mammals in commercial fisheries, the Assistant Administrator will determine whether taking is ''occasional'' (Category II) by evaluating other factors such as fishing techniques, gear used, methods used to deter marine mammals, target species, seasons and areas fished, qualitative data from logbooks or fisher reports, stranding data, and the species and distribution of marine mammals in the areas.

Due to the possible increase of short-finned pilot whales in California waters, coincidence of the fishery and short-finned pilot whales in southern California waters, historic incidental taking in the California purse seine fishery, and impacts to the short-finned pilot whale stock from other fisheries, NMFS is categorizing the California squid purse seine fishery in Category II.

Other Changes to the List of Fisheries

Southeastern U.S. Coastal Gillnet

The Southeast U.S. Atlantic coastal gillnet fishery is deleted from this final LOF. With the exception of certain gillnet fisheries already included separately on the LOF (e.g., Gulf of Maine, Southeast U.S. Atlantic coastal shad, sturgeon gillnet fishery, Gulf of Mexico coastal gillnet fishery, Florida east coast, Gulf of Mexico pelagics king and Spanish mackerel gillnet fishery, Southeastern U.S. Atlantic shark gillnet fishery), coastal Atlantic gillnet fisheries no longer exist south of North Carolina, due to state gillnet bans. Coastal gillnet fisheries in North Carolina are either included in the U.S. mid-Atlantic coastal gillnet fishery, or the North Carolina inshore gillnet fishery.

Gulf of Maine, Southern North Atlantic, Gulf of Mexico Coastal Herring Trawl Fishery

The Gulf of Maine, Southern North Atlantic, Gulf of Mexico coastal herring trawl fishery is revised as the Gulf of Maine, U.S. mid-Atlantic coastal herring trawl fishery. Although purse seine fisheries for ''herring-like'' fish such as menhaden and sardine exist in the southeastern U.S., there are no southeastern trawl fisheries targeting these species. In addition, true herring are not found in southeastern U.S. waters.

Summary of Changes to the LOF for 1997

With the following exceptions, the placement and definitions of U.S. commercial fisheries are identical to that provided in the LOF for 1996 and thus, the majority of the LOF for 1996 remains valid in 1997. The following summarizes the changes in fishery classification, fishery definition, elimination of fisheries, and species that incur incidental injury or mortality that are made final by this LOF for 1997. For a compiled list of the categorization of all U.S. commercial fisheries, contact the Office of Protected Resources (see **ADDRESSES**).

Commercial Fisheries in the Pacific Ocean

Category III to Category II:

The ''California squid purse seine fishery'' is moved from Category III to Category II.

Fishery definitions:

The ''Oregon swordfish/blue shark surface longline fishery'' is separated into the ''Oregon swordfish floating longline fishery'' and the ''Oregon blue shark floating longline fishery''. Both fisheries are retained in Category II.

Removals of fisheries from the LOF:

The ''Oregon swordfish/blue shark surface longline fishery'' is removed from the LOF.

Additions to the list of species that incur incidental injury or mortality to a particular fishery:

Short-finned pilot whales are added to the list of species that incurs injury or mortality incidental to the California squid purse seine fishery.

Commercial Fisheries in the Atlantic Ocean, Gulf of Mexico, and Caribbean

Category III to Category I and fishery definition:

The ''Gulf of Maine, U.S. mid-Atlantic inshore lobster trap/pot fishery'' and the ''Gulf of Maine, U.S. mid-Atlantic offshore lobster trap/pot fishery'' are combined and referred to as the ''Gulf of Maine, U.S. mid-Atlantic Lobster trap/pot fishery.'' This fishery is moved from Category III to Category I.

Fishery definition:

The ''Gulf of Maine mackerel trawl'' fishery, which is a Category III fishery, is combined with the ''Atlantic squid, mackerel, butterfish trawl fishery'' in Category II.

The geographic separation between the ''New England multispecies sink gillnet (including species as defined in the Multispecies Fisheries Management Plan and spiny dogfish and monkfish)'' and the ''U.S. mid-Atlantic coastal gillnet'' is changed from 70°40′ W. long to 72°30′ W. long.

The offshore monkfish gillnet fishery, which was in Category III, is combined with either the ''New England multispecies sink gillnet (including species as defined in the Multispecies Fisheries Management Plan and spiny

dogfish and monkfish)'', which is in Category I, or the ''U.S. mid-Atlantic coastal gillnet fishery'', which is in Category II, depending on where the monkfish is targeted.

Additions of Fisheries to the LOF:

The ''U.S. Atlantic tuna purse seine'' is added to Category III in the LOF.

Removals of Fisheries in the LOF:

The ''Gulf of Maine, U.S. mid-Atlantic inshore lobster trap/pot fishery'' and the ''Gulf of Maine, U.S. mid-Atlantic offshroe lobster trap/pot fishery'' are removed from the LOF.

The U.S. Atlantic large pelagics pair trawl is deleted from the LOF.

The ''Gulf of Maine mackerel trawl'' fishery is deleted from Category III in the LOF.

The ''Offshore monkfish gillnet fishery'' is deleted from Category III in the LOF.

Additions to the list of species that incur incidental injury or mortality to a particular fishery:

The North Atlantic stock of harbor seals is added as a stock that incurs injury or mortality incidental to the ''Finfish aquaculture'' fishery.

Other Changes to the LOF

Participants in Category I or II fisheries are required to register under the MMAP. In order to provide additional flexibility for integrated registration systems so that, if key MMPA Authorization Certificate registration information is supplied through integration with state systems, interjurisdictional fisheries programs, and federally managed fisheries, individual fishers would not be required to fill out forms or submit registration information but automatically would be issued registrations and Authorization Certificates.

The benefits of integrating MMPA registration with existing fishery registration or permit programs are clear. Integration results in a reduction in paperwork that must be completed by the fisher, a reduction in paperwork that must be completed by NMFS, and reduced staff burdens for NMFS. In some cases, integration has resulted in the elimination of the MMPA registration fee of $25.

Classification

This action has been determined to be not significant for the purposes of E.O. 12866.

When this LOF for 1997 was proposed, the Assistant General Counsel for Legislation and Regulation of the Department of Commerce certified to the Chief Counsel for Advocacy of the Small Business Administration certified that the proposed rule, if adopted, would not have a significant economic impact on a substantial number of small entities. As a result, a regulatory flexibility analysis was not prepared.

This final rule does not contain policies with federalism implications sufficient to warrant preparation of a federalism assessment under E.O. 12612.

Notwithstanding any other provision of law, no person is required to respond to nor shall a person be subject to a penalty for failure to comply with a collection of information subject to the requirements of the Paperwork Reduction Act unless that collection of information displays a currently valid OMB Control Number.

This final LOF determines which vessel owners must register under the MMPA, and which commercial fishers must report marine mammal mortalities and injuries within 48 hours of returning to port, as required by the section 118 implementing regulations. These collection of information requirements have been approved by OMB, and the OMB control numbers and public reporting burdens are as follows: reports of marine mammal injury or mortality (0.15 hours per report) under 0648–0292, and registration requirements (0.25 hours per registration) under 0648–0293.

The estimated response times include the time needed for reviewing instructions, searching the existing data sources, gathering and maintaining the data needed, and completing and reviewing the collections-of-information. Send comments regarding these burden estimates, or any other aspects of these collections-of-information to NMFS and OMB (see **ADDRESSES**).

List of Subjects in 50 CFR Part 229

Administrative practice and procedure, Confidential business information, Fisheries, Marine mammals, Reporting and recordkeeping requirements.

Dated: December 26, 1996.

Gary Matlock,

Acting Assistant Administrator for Fisheries, National Marine Fisheries Service.

For the reasons set out in the preamble, 50 CFR part 229 is amended as follows:

PART 229—AUTHORIZATION FOR COMMERCIAL FISHERIES UNDER THE MARINE MAMMAL PROTECTION ACT OF 1972

1. The authority citation for part 229 continues to read as follows:

Authority: 16 U.S.C. 1361 *et seq.*

2. In § 229.4, paragraphs (a),(b), and (e) are revised to read as follows:

§ 229.4 Requirements for Category I and II fisheries.

(a) *General.* (1) For a vessel owner or crew members to lawfully incidentally take marine mammals in the course of a commercial fishing operation in a Category I or II fishery, the owner or authorized representative of a fishing vessel or nonvessel fishing gear must have in possession a valid Certificate of Authorization. The owner of a fishing vessel or nonvessel fishing gear is responsible for obtaining a Certificate of Authorization.

(2) The granting and administration of Authorization Certificates under this part will be integrated and coordinated with existing fishery license, registration, or permit systems and related programs wherever possible. These programs may include, but are not limited to, state or interjurisdictional fisheries programs. If the administration of Authorization Certificates is integrated into a program, NMFS will publish a notice in the Federal Register announcing the integrated program and summarizing how an owner or authorized representative of a fishing vessel or non-fishing gear may register under that program or how registration will be achieved if no action is required on the part of the affected fisher. NMFS will make additional efforts to contact participants in the affected fishery via other appropriate means of notification.

(b) *Registration.* (1) The owner of a vessel, or for nonvessel gear fisheries, the owner of gear, who participates in a Category I or II fishery is required to be registered for a Certificate of Authorization.

(2) Unless a notice is published in the Federal Register announcing an integrated registration program, the owner of a vessel, or for nonvessel fishery, the owner of the gear must register for and receive an Authorization Certificate. To register, owners must submit the following information using the format specified by NMFS:

(i) Name, address, and phone number of owner.

(ii) Name, address, and phone number of operator, if different from owner, unless the name of the operator is not known or has not been established at the time the registration is submitted.

(iii) For a vessel fishery, vessel name, length, home port; U.S. Coast Guard documentation number or state registration number, and if applicable; state commercial vessel license number and for a nonvessel fishery, a description of the gear and state

commercial license number, if applicable.

(iv) A list of all Category I and II fisheries in which the fisher may actively engage during the calendar year.

(v) The approximate time, duration, and location of each such fishery operation, and the general type and nature of use of the fishing gear and techniques used.

(vi) A certification signed and dated by the owner of an authorized representative of the owner as follows: ''I hereby certify that I am the owner of the vessel, that I have reviewed all information contained on this document, and that it is true and complete to the best of my knowledge.''

(3) If a notice is published in the Federal Register announcing an integrated registration program, the owner of a vessel, or for nonvessel fishery, the owner of the gear may register by following the directions provided in that notice. If a person receives a registration to which he or she is not entitled or if the registration contains incorrect, inaccurate or incomplete information, the person shall notify NMFS within 10 days following receipt. If a fisher participating in a Category I or II fishery who expects to receive automatic registration does not receive that registration within the time specified in the notice announcing the integrated registration program, the person shall notify NMFS as directed in the notice or may apply for registration by submitting the information required under paragraph (b)(1)(i) through (b)(1)(vi) of this section.

* * * * *

(e) *Issuance.* (1) Unless an integrated registration program is in place, NMFS will issue an Authorization Certificate and, if necessary, a decal to an owner or authorized representative who:

(i) Submits a completed registration form and the required fee.

(ii) Has complied with the requirements of this section and §§ 229.6 and 229.7.

(iii) Has submitted updated registration or renewal registration which includes a statement (yes/no) whether any marine mammals were killed or injuried during the current or previous calendar year.

(2) If an integrated registration program has been established, an Authorization Certificate or other proof of registration will be issued annually to each fisher registered for that fishery.

(3) If a person receives a renewed Authorization Certificate or a decal to which he or she is not entitled, the person shall notify NMFS within 10 days following receipt. In order for a Authorization Certificate to be valid, the certification must be signed and dated by the owner or an authorized representative of the owner.

* * * * *

[FR Doc. 96–33370 Filed 12–27–96; 4:05 pm]

BILLING CODE 3510–22–W

Proposed Rules

Federal Register
Vol. 62, No. 1
Thursday, January 2, 1997

This section of the FEDERAL REGISTER contains notices to the public of the proposed issuance of rules and regulations. The purpose of these notices is to give interested persons an opportunity to participate in the rule making prior to the adoption of the final rules.

DEPARTMENT OF AGRICULTURE

Federal Crop Insurance Corporation

7 CFR Parts 443 and 457

RIN 0563–AA78

Hybrid Seed Crop Insurance Regulations; and Common Crop Insurance Regulations, Hybrid Corn Seed Crop Insurance Provisions

AGENCY: Federal Crop Insurance Corporation, USDA.

ACTION: Proposed rule.

SUMMARY: The Federal Crop Insurance Corporation (FCIC) proposes specific crop provisions for the insurance of hybrid corn seed. The provisions will be used in conjunction with the Common Crop Insurance Policy Basic Provisions, which contain standard terms and conditions common to most crops. The intended effect of this action is to provide policy changes to better meet the needs of the insured, include the current Hybrid Seed Crop Insurance Regulations with the Common Crop Insurance Policy for ease of use and consistency of terms, and to restrict the effect of the current hybrid corn seed crop insurance regulation to the 1997 and prior crop years.

DATES: Written comments, data, and opinions on this proposed rule will be accepted until close of business March 3, 1997 and will be considered when the rule is to be made final. The comment period for information collections under the Paperwork Reduction Act of 1995 continues through March 3, 1997.

ADDRESSES: Interested persons are invited to submit written comments to the Chief, Product Development Branch, Federal Crop Insurance Corporation, United States Department of Agriculture, 9435 Holmes Road, Kansas City, MO 64131. Written comments will be available for public inspection and copying in room 0324, South Building, United States Department of Agriculture, 14th and Independence Avenue, S.W., Washington, D.C., 8:15 a.m. to 4:45 p.m., est, Monday through Friday, except holidays.

FOR FURTHER INFORMATION CONTACT: Ron Nesheim, Program Analyst, Research and Development Division, Product Development Branch, Federal Crop Insurance Corporation, at the Kansas City, MO, address listed above, telephone (816) 926–7730.

SUPPLEMENTARY INFORMATION:

Executive Order No. 12866

The Office of Management and Budget (OMB) has determined this rule to be exempt for the purposes of Executive Order No. 12866, and, therefore, this rule has not been reviewed by OMB.

Paperwork Reduction Act of 1995

The title of this information collection is ''Catastrophic Risk Protection Plan and Related Requirements including, Common Crop Insurance Regulations; Hybrid Corn Seed Crop Insurance Provisions.'' The information to be collected includes a crop insurance application and an acreage report. Information collected from the application and acreage report is electronically submitted to FCIC by the reinsured companies. Potential respondents to this information collection are producers of hybrid corn seed that are eligible for Federal crop insurance.

The information requested is necessary for the reinsured companies and FCIC to provide insurance and reinsurance, determine eligibility, determine the correct parties to the agreement or contract, determine and collect premiums or other monetary amounts, and pay benefits.

All information is reported annually. The reporting burden for this collection of information is estimated to average 16.9 minutes per response for each of the 3.6 responses from approximately 1,755,015 respondents. The total annual burden on the pubic for this information collection is 2,676,932 hours.

FCIC is requesting comments on the following: (a) Whether the proposed collection of information is necessary for the proper performance of the functions of the agency, including whether the information shall have practical utility; (b) the accuracy of the agency's estimate of the burden of the proposed collection of information; (c) ways to enhance the quality, utility, and clarity of the information to be collected; and (d) ways to minimize the burden of the collection of information on respondents, including through the use of automated collection techniques or other forms of information gathering technology.

Comments regarding paperwork reduction should be submitted to the Desk Officer of Agriculture, Office of Information and Regulatory Affairs, Office of Management and Budget, Washington, D.C. 20503.

The Office of Management and Budget (OMB) is required to make a decision concerning the collections of information contained in these proposed regulations between 30 and 60 days after submission to OMB. Therefore, a comment to OMB is best assured of having full effect if OMB receives it within 30 days of publication. This does not affect the deadline for the public to comment on the proposed regulation.

Unfunded Mandates Reform Act of 1995

Title II of the Unfunded Mandates Reform Act of 1995 (UMRA), Public Law 104–4, establishes requirements for Federal agencies to assess the effects of their regulatory actions on state, local, and tribal governments and the private sector. This rule contains no Federal mandates (under the regulatory provisions of title II of the UMRA) for state, local, and tribal governments or the private sector. Thus, this rule is not subject to the requirements of sections 202 and 205 of the UMRA.

Executive Order No. 12612

It has been determined under section 6(a) of Executive Order No. 12612, Federalism, that this rule does not have sufficient federalism implication to warrant the preparation of a Federalism Assessment. The provisions contained in this rule will not have a substantial direct effect on states or their political subdivisions, or on the distribution of power and responsibilities among the various levels of government.

Regulatory Flexibility Act

This regulation will not have a significant impact on a substantial number of small entities. New provisions included in this rule will not impact small entities to a greater extent than large entities. Under the current regulations, a producer is required to complete an application and acreage

report. If the crop is damaged or destroyed, the insured is required to give notice of loss and provide the necessary information to complete a claim for indemnity. The producer must also annually certify to the previous years production if adequate records are available to support the certification. The producer must maintain the production records to support the certified information for at least three years. This regulation does not alter those requirements. The amount of work required of the insurance companies delivering and servicing these policies will not increase significantly from the amount of work currently required. This rule does not have any greater or lesser impact on the producer. Therefore, this action is determined to be exempt from the provisions of the Regulatory Flexibility Act (5 U.S.C. 605), and no Regulatory Flexibility Analysis was prepared.

Federal Assistance Program

This program is listed in the Catalog of Federal Domestic Assistance under No. 10.450.

Executive Order No. 12372

This program is not subject to the provisions of Executive Order No. 12372, which require intergovernmental consultation with state and local officials. See the Notice related to 7 CFR part 3015, subpart V, published at 48 FR 29115, June 24, 1983.

Executive Order No. 12778

The Office of the General Counsel has determined that these regulations meet the applicable standards provided in sections 2(a) and 2(b)(2) of Executive Order No. 12778. The provisions of this rule will not have a retroactive effect prior to the effective date. The provisions of this rule will preempt state and local laws to the extent such state and local laws are inconsistent herewith. The administrative appeal provisions published at 7 CFR parts 11 and 780 must be exhausted before any action for judicial review may be brought.

Environmental Evaluation

This action is not expected to have a significant impact on the quality of the human environment, health, and safety. Therefore, neither an Environmental Assessment nor an Environmental Impact Statement is needed.

National Performance Review

This regulatory action is being taken as part of the National Performance Review Initiative to eliminate unnecessary or duplicative regulations and improve those that remain in force.

Background

FCIC proposes to add to the Common Crop Insurance Regulations (7 CFR part 457), a new section, 7 CFR 457.152, Hybrid Corn Seed Crop Insurance Provisions. The new provisions will be effective for the 1998 and succeeding crop years. These provisions will replace and supersede the current provisions for insuring hybrid corn seed found at 7 CFR part 443 (Hybrid Seed Crop Insurance Regulations). FCIC also proposes to amend 7 CFR part 443 to limit its effect to the 1997 and prior crop years. FCIC will later publish a regulation to remove part 443 and reserve that part.

This rule makes minor editorial and format changes to improve the Hybrid Corn Seed Crop Insurance Regulation's compatibility with the Common Crop Insurance Policy. In addition, FCIC is proposing substantive changes in the provisions for insuring hybrid corn seed as follows:

1. Section 1—Add definitions for the terms *adjusted yield, bushel, certified seed test, county yield, FSA, field run, good farming practices, hybrid corn seed processor contract, insurable interest, interplanted, local market price, minimum guaranteed payment, planted acreage, planting pattern, practical to replant, seed amount,* and *written agreement* for clarification.

2. Section 2—Unit division provisions are amended to include a producer's reporting responsibilities to qualify for optional units. In addition, section 2(e)(4)(ii) clarifies that non-irrigated acreage that is not part of a field in which a center pivot irrigation system is used may qualify as a separate optional unit. This makes unit division consistent with other row crops. Also, clarifies that optional units are available if the hybrid corn seed processor contract specifies that it is a specific number of acres that are under contract and not a specified amount of production.

3. Section 4—Change the contract change date to November 30 in order to maintain an adequate time period between the contract change date and the revised cancellation date.

4. Section 5—Change the cancellation and termination dates to March 15. This change is necessary to standardize the cancellation and termination dates with the sales closing dates which were changed to 30 days earlier for spring planted crops to comply with the requirements of the Federal Crop Insurance Reform Act of 1994.

5. Section 6—Require the producer to certify that a hybrid corn seed processor contract has been executed and certify the amount of any minimum guaranteed payment from the seed company. Certification of a hybrid corn seed processor contract on or before the acreage reporting date is needed to establish insurability of the crop before a loss is likely and ensures a market for the crop. The producer must also certify to any minimum guaranteed payment under the contract because a minimum guaranteed payment will affect insurance premium and the amount of indemnity.

6. Section 7(c)—Specify conditions under which a seed producer who is also a seed company can establish an insurable interest in the insured crop. There is an inherent conflict of interest when the producer is also the processor who will provide the records of the producer. These conditions are needed to ensure the eligibility of the processor for crop insurance.

7. Section 8(c)—Clarify that any acreage damaged prior to the final planting date must be replanted unless it is not practical to replant.

8. Section 9(b)—Specify that the calendar date for the end of the insurance period is October 31. The current policy language refers to the date contained in the Actuarial Table.

9. Section 11(a)—Clarify the size of representative crop samples required when damage is discovered.

10. Section 12(e)—Clarify the types of production that will be considered seed production to count.

11. Section 12(g)—Change the adjustment level for high-moisture shelled hybrid corn seed from 15.5 percent to 15.0 percent. This change is consistent with changes in provisions for insuring field corn. Moisture adjustment calculations for ear corn are also changed. The current policy states ''the weight of ear corn to equal one bushel of shelled corn will be increased 2 pounds for each percentage point of moisture in excess of 14.0 percent.'' This conversion factor is changed to 1.5 pounds for each percentage point of moisture in excess of 14.0 percent because research has shown the existing formula overcompensates insureds for high moisture seed corn. The proposed provisions also allow use of the seed company's moisture conversion charts if the charts were used to determine the ''approved yield.''

12. Section 14. Add provisions for providing insurance coverage by written agreement. FCIC has a longstanding policy of permitting certain modification of the insurance contract by written agreement for some policies.

This amendment allows FCIC to tailor the policy to a specific insured in certain instances. The new section will cover application for, and duration of, written agreements.

List of Subjects in 7 CFR Parts 443 and 457

Crop insurance, Hybrid seed crop insurance regulations, Hybrid corn seed.

Proposed Rule

Accordingly, for the reasons set forth in the preamble, the Federal Crop Insurance Corporation hereby proposes to amend 7 CFR parts 443 and 457 as follows:

PART 443—HYBRID SEED CROP INSURANCE REGULATIONS

1. The authority citation for 7 CFR part 443 continues to read as follows:

Authority: 7 U.S.C 1506(l) and 1506(p).

2. The subpart heading preceding § 443.1 is revised to read as follows:

Subpart—Regulations for the 1986 through 1997 Crop Years.

3. Section 443.7 is amended by revising the introductory text of paragraph (d) to read as follows:

§ 443.7 The application and policy

* * * * *

(d) The application for the 1986 through 1997 crop years is found at subpart D of part 400, General Administrative Regulations (7 CFR 400.37 and 400.38). The provisions of the Hybrid Seed Crop Insurance Regulations for the 1986 through 1997 crop years are as follows:

* * * * *

PART 457—COMMON CROP INSURANCE REGULATIONS; REGULATIONS FOR THE 1994 AND SUBSEQUENT CONTRACT YEARS

3. The authority citation for 7 CFR part 457 continues to read as follows:

Authority: 7 U.S.C. 1506(l) and 1506(p).

4. 7 CFR part 457 is amended by adding a new § 457.152 to read as follows:

§ 457.152 Hybrid Corn Seed Crop Insurance Provisions

The Hybrid Corn Seed Crop Insurance Provisions for the 1998 and succeeding crop years are as follows:

FCIC policies:

DEPARTMENT OF AGRICULTURE

Federal Crop Insurance Corporation

Reinsured policies:

(Appropriate title for insurance provider)

Both FCIC and reinsured policies:

Hybrid Corn Seed Crop Provisions

If a conflict exists among the Basic Provisions (§ 457.8), these crop provisions, and the Special Provisions; the Special Provisions will control these crop provisions and the Basic Provisions; and these crop provisions will control the Basic Provisions.

1. Definitions

Adjusted yield—The yield per acre that results from multiplying the approved yield by the coverage level percentage.

Amount of insurance per acre—The number of dollars determined by multiplying the county yield for the coverage level you select by the price election you select, and subtracting any minimum guaranteed payment. If the minimum guaranteed payment is stated in a unit of measure other than dollars, it will be converted to a dollar amount by multiplying the number of bushels guaranteed by the price election you selected.

Approved yield—The yield per acre that a specific type or variety is expected to produce determined from yield records provided by the seed company or other acceptable information.

Bushel—Fifty-six pounds avoirdupois of shelled corn, 70 pound avoirdupois of ear corn, or the number of pounds determined under the seed company's normal conversion chart when the company's conversion chart is used to determine the approved yield and the claim for indemnity.

Certified seed test—A warm germination test performed according to specifications of the ''Rules for Testing Seeds'' of the Association of Official Seed Analysts.

Commercial hybrid corn seed—The offspring produced by crossing a male and female parent plant, each having a different genetic character. This offspring is the product intended for use by an agricultural producer to produce a commercial field corn crop for grain.

County yield—A yield contained in the Actuarial Table that is used to calculate your amount of insurance.

Days—Calendar days.

Dollar value per bushel—The value determined by dividing your amount of insurance for timely planted acreage by the adjusted yield.

FSA—The Farm Service Agency, an agency of the United States Department of Agriculture, or a successor agency.

Female parent plants—Corn plants that are grown for the purpose of producing commercial hybrid corn seed and have had their stamens removed.

Field run—Commercial hybrid corn seed production before it has been processed or screened.

Final planting date—The date contained in the Special Provisions for the insured crop by which the crop must initially be planted in order to be insured for the full amount of insurance per acre.

Good farming practices—The cultural practices generally in use in the county for the crop to make normal progress toward maturity and produce at least the yield used to determine the amount of insurance, or are required by the hybrid corn seed processor contract and recognized by the Cooperative State Research, Education, and Extension Service as compatible with agronomic and weather conditions in the county.

Harvest—Combining, threshing or picking of the female parent plants to obtain commercial hybrid corn seed.

Hybrid corn seed processor contract—A written agreement between the hybrid corn seed crop producer and a seed company containing, at a minimum:

(a) The producer's promise to plant and grow male and female parent plants, and to deliver all commercial hybrid corn seed produced from such plants to the seed company;

(b) The seed company's promise to purchase all the commercial hybrid corn seed produced by the producer; and

(c) Either a fixed price per unit of measure (bushels, hundredweight, etc.) of the commercial hybrid corn seed or a formula to determine the value of such seed. Any formula for establishing the value must be based on data provided by a public third party that establishes or provides pricing information to the general public, based on prices paid in the open market (*e.g.*, commodity futures exchanges) to be acceptable for the purpose of this policy.

Inadequate germination—Germination of less than 80 percent of the commercial hybrid corn seed as determined by using a certified seed test on clean seed.

Insurable interest—Your share of the financial loss that occurs in the event seed production is reduced by a cause of loss defined under this crop insurance contract.

Interplanted—Acreage on which two or more crops are planted in a manner that does not permit separate agronomic maintenance or harvest of the insured crop.

Irrigated practice—A method of producing a crop by which water is artificially applied during the growing season by appropriate systems and at the proper times, with the intention of providing the quantity of water needed to produce at least the yield used to establish the irrigated amount of insurance on the irrigated acreage planted to the insured crop.

Late planted—Acreage planted to the insured crop during the late planting period.

Late planting period—The period that begins the day after the final planting date for the insured crop and ends 25 days after the final planting date.

Local market price—The cash price offered by buyers in the area for any production from the female parent plants that is not considered commercial hybrid corn seed under the terms of this policy.

Male parent plants—Corn plants grown for the purpose of pollinating female parent plants.

Minimum guaranteed payment—A minimum amount (usually stated in dollars or bushels) specified in your hybrid corn seed processor contract that will be paid or credited to you by the seed company regardless of the quantity of seed produced.

Non-seed amount—The dollar amount obtained by multiplying the number of bushels of non-seed production to count by

the local market price determined on the earlier of the date the non-seed production is sold or the date of final inspection for the unit.

Planted acreage—Land in which seed has been placed by a machine appropriate for the insured crop and planting method, at the correct depth, into a seedbed that has been properly prepared for the planting method and production practice. The insured crop must be planted in rows wide enough to permit mechanical cultivation. Acreage planted in any other manner will not be insurable unless otherwise provided by the Special Provisions or by written agreement.

Planting pattern—The arrangement of the rows of the male and female parent plants in a field. An example of a planting pattern is four consecutive rows of female parent plants, two consecutive rows of male parent plants.

Practical to replant—In lieu of the definition of ''Practical to replant'' contained in section 1 of the Basic Provisions (§ 457.8), practical to replant is defined as our determination, after loss or damage to the insured crop, based on factors, including but not limited to moisture availability, condition of the field, time to crop maturity, and marketing window, that replanting to the insured crop will allow the crop to adequately pollinate and attain maturity prior to the calendar date for the end of the insurance period. It will not be considered practical to replant after the end of the late planting period unless replanting is generally occurring in the area. Determinations of practical to replant will take into consideration the planting dates specified in the hybrid corn seed processor contract in accordance with section 8(c).

Prevented planting—Inability to plant:

(a) The female parent plant seed with proper equipment by:

(1) The final planting date designated in the Special Provisions for the insured crop in the county; or

(2) The end of the late planting period; or

(b) The male parent plant seed with proper equipment at a time sufficient to assure adequate pollination of the female parent plants in accordance with the production management practices of the seed company.

You must have been unable to plant the female or male parent plant seed due to an insured cause of loss that has prevented the majority of producers in the surrounding area from planting the same crop.

Sample—For the purpose of the certified seed test, at least 3 pounds of field run shelled corn for each variety of commercial hybrid corn seed grown on the unit.

Seed amount—The dollar amount obtained by multiplying the number of bushels of seed production to count for each type or variety of commercial hybrid corn seed grown on the unit by the applicable dollar value per bushel for that type or variety, and totaling the products of each type or variety.

Seed company—A corporation that possesses all licenses for marketing commercial hybrid corn seed required by the state in which it is domiciled or operates, and which possesses or has contracted facilities with enough storage and drying capacity to accept and process the insured crop within a reasonable amount of time after harvest.

Seed production—All seed produced by female parent plants with a germination rate of at least 80 percent, as determined by a certified seed test.

Shelled corn—Kernels that have been removed from the cob.

Timely planted—Planted on or before the final planting date designated in the Special Provisions for the insured crop in the county.

Variety—The name, number or code assigned to a specific genetic cross by the seed company or the Special Provisions for the insured crop in the county.

Written agreement—A written document that alters designated terms of this policy in accordance with section 14.

2. Unit Division

(a) Unless limited by the Special Provisions, a unit as defined in section 1 (Definitions) of the Basic Provisions (§ 457.8), (basic unit) may be divided into optional units only if, for each optional unit, you meet all the conditions of this section or if a written agreement to such division exists.

(b) Optional units are available if the hybrid corn seed processor contract specifies that it is a specific number of acres that are under contract and not a specified amount of production.

(c) If you do not comply fully with these provisions, we will combine all optional units that are not in compliance with these provisions into the basic unit from which they were formed. We will combine the optional units at any time we discover that you have failed to comply with these provisions. If failure to comply with these provisions is determined to be inadvertent, and the optional units are combined into a basic unit, that portion of the additional premium paid for the optional units that have been combined will be refunded to you.

(d) All optional units you selected for the crop year must be identified on the acreage report for that crop year.

(e) The following requirements must be met for each optional unit:

(1) You must have records, which can be independently verified, of planted acreage and production for each optional unit for at least the last crop year used to determine your amount of insurance.

(2) You must plant the crop in a manner that results in a clear and discernable break in the planting pattern at the boundaries of each optional unit;

(3) You must have records of marketed production or measurement of stored production from each optional unit maintained in such a manner that permits us to verify the production from each optional unit, or the production from each unit must be kept separate until loss adjustment is completed by us; and

(4) Each optional unit must meet one or more of the following criteria, as applicable:

(i) *Optional Units by Section, Section Equivalent, or FSA Farm Serial Number:* Optional units may be established if each optional unit is located in a separate legally identified section. In the absence of sections, we may consider parcels of land legally identified by other methods of measure including, but not limited to Spanish grants, railroad surveys, leagues, labors, or Virginia Military Lands, as the equivalent of sections for unit purposes. In areas that have not been surveyed using the systems identified above, or another system approved by us, or in areas where such systems exist but boundaries are not readily discernable, each optional unit must be located in a separate farm identified by a unique FSA Farm Serial Number.

(ii) *Optional Units on Acreage Including Both Irrigated and Non-irrigated Practices:* In addition to, or instead of, establishing optional units by section, section equivalent, or FSA Farm Serial Number, optional units may be based on irrigated acreage or non-irrigated acreage if both are located in the same section, section equivalent, or FSA Farm Serial Number. To qualify as separate irrigated and non-irrigated optional units, the non-irrigated acreage may not continue into the irrigated acreage in the same rows or planting pattern. The irrigated acreage may not extend beyond the point at which the irrigation system can deliver the quantity of water needed to produce the yield on which the guarantee is based, except the corners of a field in which a center pivot irrigation system is used will be considered as irrigated acreage if separate acceptable records of production from the corners are not provided. If the corners of a field in which a center-pivot irrigation system is used do not qualify as a separate non-irrigated optional unit, they will be a part of the unit containing the irrigated acreage. However, non-irrigated acreage that is not a part of a field in which a center-pivot irrigation system is used may qualify as a separate optional unit provided that all requirements of this section are met.

3. Insurance Guarantees, Coverage Levels, and Prices for Determining Indemnities

(a) In addition to the requirements of section 3 (Insurance Guarantees, Coverage Levels, and Prices for Determining Indemnities) of the Basic Provisions (§ 457.8), you may select only one price election for all the hybrid corn seed in the county insured under this policy unless the Special Provisions provide different price elections by type or variety, in which case you may select one price election for each hybrid corn seed type or variety designated in the Special Provisions. The price election you choose for each type or variety must have the same percentage relationship to the maximum price offered by us for each type or variety. For example, if you choose 100 percent of the maximum price election for one specific type or variety, you must also choose 100 percent of the maximum price election for all other types or varieties.

(b) The production reporting requirements contained in section 3 (Insurance Guarantees, Coverage Levels, and Prices for Determining Indemnities) of the Basic Provisions (§ 457.8) are not applicable to this contract.

4. Contract Changes

In accordance with section 4 (Contract Changes) of the Basic Provisions (§ 457.8), the contract change date is November 30 preceding the cancellation date.

5. Cancellation and Termination Dates

In accordance with section 2 (Life of Policy, Cancellation, and Termination) of the

Basic Provisions (§ 457.8), the cancellation and termination dates are March 15.

6. Report of Acreage

In addition to the requirements of section 6 (Report of Acreage) of the Basic Provisions (§ 457.8), you must:

(a) Report, by type and variety, the location and insurable acreage of the insured crop;

(b) Report any acreage that is uninsured, including that portion of the total acreage occupied by male parent plants; and

(c) Certify that you have a hybrid corn seed processor contract and, if applicable, report the amount of any minimum guaranteed payment.

7. Insured Crop

(a) In accordance with section 8 (Insured Crop) of the Basic Provisions (§ 457.8), the crop insured will be all the female parent plants in the county for which a premium rate is provided by the actuarial table:

(1) In which you have a share;

(2) That are grown under a hybrid corn seed processor contract executed before the acreage reporting date;

(3) That are planted for harvest as commercial hybrid corn seed in accordance with the requirements of the hybrid corn seed processor contract; and

(4) That are not (unless allowed by the Special Provisions or by written agreement):

(i) Planted with a mixture of female and male parent seed in the same row;

(ii) Planted for any purpose other than for commercial hybrid corn seed;

(iii) Interplanted with another crop; or

(iv) Planted into an established grass or legume.

(b) An instrument in the form of a ''lease'' under which you retain control of the acreage on which the insured crop is grown and that provides for delivery of the crop under substantially the same terms as a hybrid corn seed processor contract will be treated as a contract under which you have an insurable interest in the crop.

(c) A commercial hybrid corn seed producer who is also a commercial hybrid corn seed company may be able to establish an insurable interest if the following requirements are met:

(1) The seed company must be a corporation and have an insurable interest in the hybrid corn seed crop;

(2) The Board of Directors of the seed company must have instituted a corporate resolution that sets forth essentially the same terms as a hybrid corn seed processor contract. Such corporate resolution will be considered a contract under the terms of the hybrid corn seed crop insurance policy;

(3) Sales records for at least the previous years' seed production must be provided to confirm that the seed company has produced and sold seed. If such records are not available, the crop may only be insured under the Coarse Grains Crop Provisions; and

(4) Our inspection of the storage and drying facilities determines that they satisfy the requirements for a seed company.

8. Insurable Acreage

In addition to the provisions of section 9 (Insurable Acreage) of the Basic Provisions (§ 457.8), we will not insure any acreage:

(a) Planted and occupied exclusively by male parent plants;

(b) Not in compliance with the rotation requirements contained in the Special Provisions or, if applicable, required by the hybrid corn seed processor contract; or

(c) Of the insured crop damaged before the final planting date, to the extent that the remaining stand will not produce at least 90 percent of the adjusted yield, unless such acreage is replanted or we agree that it is not practical to replant. If we determine that it is practical to replant and the seed company will not extend the planting date stipulated in the hybrid corn seed processor contract, we will delete the affected acreage from your report of acreage, and that acreage will not be insured under these crop provisions.

9. Insurance Period

(a) In addition to the provisions of section 11 (Insurance Period) of the Basic Provisions (§ 457.8), insurance attaches after:

(1) The female parent plant seed is completely planted in accordance with the hybrid corn seed processor contract and the production practices of the seed company, on or before the final planting date designated in the Hybrid Corn Seed Special Provisions, except as allowed in section 13(c); and

(2) The male parent plant seed is completely planted in accordance with production practices for the variety being produced.

(b) In accordance with the provisions of section 11 (Insurance Period) of the Basic Provisions (§ 457.8), the calendar date for the end of the insurance period is the October 31 immediately following planting.

10. Causes of Loss

(a) In accordance with the provisions of section 12 (Causes of Loss) of the Basic Provisions (§ 457.8), insurance is provided only against the following causes of loss that occur within the insurance period:

(1) Adverse weather conditions;

(2) Fire;

(3) Insects, but not damage due to insufficient or improper application of pest control measures;

(4) Plant disease, but not damage due to insufficient or improper application of disease control measures;

(5) Wildlife;

(6) Earthquake;

(7) Volcanic eruption; or

(8) Failure of irrigation water supply, if caused by an insured peril that occurs during the insurance period.

(b) In addition to the causes of loss not insured against under section 12 (Causes of Loss) of the Basic Provisions (§ 457.8), we will not insure against any loss of production due to:

(1) The use of unadapted, incompatible, or genetically deficient male or female parent plant seed;

(2) Frost or freeze after the date set by the Special Provisions;

(3) Failure to follow the requirements stated in the hybrid corn seed processor contract or production management practices of the seed company;

(4) Inadequate germination, even if it's the result of an insured cause of loss, unless you have provided adequate notice under section 11(b)(1) and the crop is inspected and the loss is appraised by us before harvest is completed; or

(5) Failure to plant the male parent plant seed at a time or in a manner sufficient to assure adequate pollination of the female parent plants, unless you are prevented from planting the male parent plant seed.

11. Duties in the Event of Damage or Loss

(a) In accordance with the requirements of section 14 (Duties in the Event of Damage or Loss) of the Basic Provisions (§ 457.8), the representative samples of the unharvested crop must be at least one complete planting pattern of the male and female parent plant rows, and extend the entire length of each field in the unit. The samples must not be harvested or destroyed until the earlier of our inspection or 15 days after harvest of the balance of the unit is completed.

(b) In addition to your duties under section 14 (Duties in the Event of Damage or Loss) of the Basic Provisions (§ 457.8):

(1) You must give us notice of probable loss at least 15 days before the beginning of harvest if you anticipate inadequate germination on any unit; and

(2) You must provide a completed copy of your hybrid corn seed processor contract.

12. Settlement of Claim

(a) We will determine your loss on a unit basis. In the event you are unable to provide separate acceptable production records:

(1) For any optional units, we will combine all optional units for which such production records were not provided; or

(2) For any basic units, we will allocate any commingled production to such units in proportion to our liability on the harvested acreage for the units.

(b) You will not receive an indemnity payment on a unit if the seed company refuses to provide us with records we require to determine the dollar value per bushel of production for each variety.

(c) In the event of loss or damage covered by this policy, we will settle your claim on any unit by:

(1) Multiplying the insured acreage by its respective amount of insurance per acre;

(2) Subtracting the total of production to count for the seed amount and the non-seed amount from the result of section 12(c)(1); and

(3) Multiplying the result of section 12(c)(2) by your share.

(d) The total production (bushels) to count from all insurable acreage on the unit will include all seed and non-seed production as specified in section 12 (e) through (g) below.

(e) Production to be counted as seed production will include:

(1) All appraised production as follows:

(i) Not less than the adjusted yield for acreage:

(A) That is abandoned;

(B) Put to another use without our consent;

(C) That is damaged solely by uninsured causes; or

(D) For which you fail to provide acceptable production records;

(ii) Production lost due to uninsured causes;

(iii) Mature unharvested production with a germination rate of at least 80 percent of the

commercial hybrid corn seed as determined by a certified seed test. Any such production may be adjusted in accordance with section 12(g);

(iv) Immature appraised production;

(v) Potential production on insured acreage that you intend to put to another use or abandon, if you and we agree on the appraised amount of production. Upon such agreement, the insurance period for that acreage will end if you put the acreage to another use or abandon the crop. If agreement on the appraised amount of production is not reached:

(A) If you do not elect to continue to care for the crop, we may give you consent to put the acreage to another use if you agree to leave intact, and provide sufficient care for, representative samples of the crop in locations acceptable to us (The amount of production to count for such acreage will be based on the harvested production or appraisals from the samples at the time harvest should have occurred. If you do not leave the required samples intact, or fail to provide sufficient care for the samples, our appraisal made prior to giving you consent to put the acreage to another use will be used to determine the amount of production to count); or

(B) If you elect to continue to care for the crop, the amount of production to count for the acreage will be the harvested production, or our reappraisal if additional damage occurs and the crop is not harvested; and

(2) Harvested production that you deliver as commercial hybrid corn seed to the seed company stated in your hybrid corn seed processor contract, regardless of quality, unless the production has inadequate germination.

(f) Production to be counted as non-seed production will include all harvested or mature appraised production that does not qualify as seed production to count as specified in section 12(e). Any such production may be adjusted in accordance with section 12(g).

(g) For the purpose of determining the quantity of mature production:

(1) Shelled commercial hybrid corn seed will be:

(i) Increased 0.12 percent for each 0.1 percentage point of moisture below 15 percent; or

(ii) Decreased 0.12 percent for each 0.1 percentage point of moisture in excess of 15 percent.

(2) The weight of ear corn required to equal one bushel of shelled corn seed will be increased 1.5 pounds for each full percentage point of moisture in excess of 14 percent, and any portion of a percentage point will be disregarded. The moisture content of ear corn will be determined from a shelled sample of the ear corn.

(3) When records of commercial hybrid corn seed production provided by the seed company have been adjusted to a shelled corn basis of 15.0 percent moisture and 56 pound avoirdupois bushels, sections 12(g) (1) and (2) above will not apply to harvested production. In such cases, records of the seed company used for determining the next year's approved yield will be used to determine the amount of production to count; provided, such production records are calculated on the same basis as that used to determine the approved yield.

13. Late Planting and Prevented Planting

(a) In lieu of provisions contained in the Basic Provisions (§ 457.8) regarding acreage initially planted after the final planting date and the applicability of a Late Planting Agreement Option, insurance will be provided for acreage planted to the insured crop during the late planting period (see section 13(c)), and acreage you were prevented from planting (see section 13(d)). These coverages provide reduced amounts of insurance. The premium amount for late planted acreage and eligible prevented planting acreage will be the same as that for timely planted acreage. If the amount of premium you are required to pay (gross premium less our subsidy) for late planted acreage or prevented planting acreage exceeds the liability on such acreage, coverage for those acres will not be provided, no premium will be due, and no indemnity will be paid for such acreage.

(b) You must provide written notice to us not later than the acreage reporting date if you were prevented from planting.

(c) Late Planting

(1) For hybrid corn seed acreage planted during the late planting period, the amount of insurance for each acre will be reduced for each day planted after the final planting date by:

(i) One percent per day for the 1st through the 10th day; and

(ii) Two percent per day for the 11th through the 25th day.

(2) In addition to the requirements of section 6 (Report of Acreage) of the Basic Provisions (§ 457.8), you must report the dates the acreage is planted within the late planting period.

(3) If planting of hybrid corn seed continues after the final planting date, or you are prevented from planting during the late planting period, the acreage reporting date will be the later of:

(i) The acreage reporting date contained in the Special Provisions for the insured crop; or

(ii) Five days after the end of the late planting period.

(d) Prevented Planting (Including Planting After the Late Planting Period)

(1) If you were prevented from timely planting hybrid corn seed, you may elect:

(i) To plant hybrid corn seed during the late planting period. The amount of insurance for such acreage will be determined in accordance with section 13(c)(1);

(ii) Not to plant this acreage to any crop except a cover crop not for harvest. You may also elect to plant the insured crop after the late planting period. In either case, the amount of insurance for such acreage will be 40 percent of the amount of insurance for timely planted acres. For example, if your amount of insurance for timely planted acreage is $300 per acre, your prevented planting amount of insurance would be $120 per acre ($300 multiplied by 0.40). If you elect to plant the insured crop after the late planting period, production to count for such acreage will be determined in accordance with section 12; or

(iii) Not to plant the intended crop but plant a substitute crop for harvest, in which case:

(A) No prevented planting amount of insurance will be provided for such acreage if the substitute crop is planted on or before the 10th day following the final planting date for the insured crop; or

(B) An amount of insurance equal to 20 percent of the amount of insurance for timely planted acres will be provided for such acreage, if the substitute crop is planted after the 10th day following the final planting date for the insured crop. If you elected the Catastrophic Risk Protection Endorsement or excluded this coverage, and plant a substitute crop, no prevented planting coverage will be provided. For example, if your amount of insurance for timely planted acreage is $300 per acre, your prevented planting amount of insurance would be $60 per acre ($300 multiplied by 0.20). You may elect to exclude prevented planting coverage when a substitute crop is planted for harvest and receive a reduction in the applicable premium rate. If you wish to exclude this coverage, you must so indicate, on or before the sales closing date, on your application or on a form approved by us. Your election to exclude this coverage will remain in effect from year to year unless you notify us in writing on our form by the applicable sales closing date for the crop year for which you wish to include this coverage. All acreage of the crop insured under this policy will be subject to this exclusion.

(2) Amounts of insurance for timely, late, and prevented planting acreage within a unit will be combined to determine the amount of insurance for the unit. For example, assume you insure one unit in which you have a 100 percent share. The unit consists of 185 acres of the same type and variety of which 150 acres are occupied by the female parent plants. (The acreage occupied by the male parent plants (35 acres) is not insurable, and is not eligible for coverage under this section.) The unit consists of 150 acres, of which 50 acres were planted timely, 50 acres were planted 7 days after the final planting date (late planted), and 50 acres were not planted but are eligible for a prevented planting amount of insurance. The amount of insurance for the unit will be computed as follows:

(i) For the timely planted acreage, multiply the per acre amount of insurance for timely planted acreage by the 50 acres planted timely;

(ii) For the late planted acreage, multiply the per acre amount of insurance for timely planted acreage by 93 percent, and multiply the result by the 50 acres planted late; and

(iii) For prevented planting acreage, multiply the per acre amount of insurance for timely planted acreage by:

(A) Forty percent and multiply the result by the 50 acres you were prevented from planting, if the acreage is eligible for prevented planting coverage, and if the acreage is left idle for the crop year, or if a cover crop is planted not for harvest. Prevented planting compensation hereunder will not be denied because the cover crop is hayed or grazed; or

(B) Twenty percent and multiply the result by the 50 acres you were prevented from planting, if the acreage is eligible for prevented planting coverage, and if you elect to plant a substitute crop for harvest after the 10th day following the final planting date for the insured crop. (This paragraph (B) is not applicable, and prevented planting coverage is not available under these crop provisions, if you elected the Catastrophic Risk Protection Endorsement or you elected to exclude prevented planting coverage when a substitute crop is planted (see section 13(d)(1)(iii)).

Your premium will be based on the result of multiplying the per acre amount of insurance for timely planted acreage by the 150 acres in the unit.

(3) You must have the inputs available to plant and produce the intended crop with the expectation of at least producing the approved yield. Proof that these inputs were available may be required.

(4) In addition to the provisions of section 11 (Insurance Period) of the Basic Provisions (§ 457.8), the insurance period for prevented planting coverage begins:

(i) On the sales closing date contained in the Special Provisions for the insured crop in the county for the crop year the application for insurance is accepted; or

(ii) For any subsequent crop year, on the sales closing date for the insured crop in the county for the previous crop year, provided continuous coverage has been in effect since that date. For example: If you make application and purchase insurance for hybrid corn seed for the 1998 crop year, prevented planting coverage will begin on the 1998 sales closing date for hybrid corn seed in the county. If the coverage remains in effect for the 1999 crop year (is not terminated or canceled during or after the 1998 crop year), prevented planting coverage for the 1999 crop year began on the 1998 sales closing date. Cancellation for the purpose of transferring the policy to a different insurance provider when there is no lapse in coverage will not be considered terminated or canceled coverage for the purpose of the preceding sentence.

(5) The acreage to which prevented planting coverage applies will not exceed the total eligible acreage on all FSA Farm Serial Numbers in which you have a share, adjusted for any reconstitution that may have occurred on or before the sales closing date. Eligible acreage for each FSA Farm Serial Number is determined as follows:

(i) If you participate in any program administered by the United States Department of Agriculture that limits the number of acres that may be planted for the crop year, the acreage eligible for prevented planting coverage will not exceed the total acreage permitted to be planted to the insured crop.

(ii) If you do not participate in any program administered by the United States Department of Agriculture that limits the number of acres that may be planted, and unless we agree in writing on or before the sales closing date, eligible acreage will not exceed the greater of:

(A) The number of acres planted to hybrid corn seed on the FSA Farm Serial Number during the previous crop year; or

(B) One-hundred percent of the simple average of the number of acres planted to hybrid corn seed during the crop years that you certified to determine your yield.

(iii) Acreage intended to be planted under an irrigated practice will be limited to the number of acres for which you had adequate irrigation facilities prior to the insured cause of loss which prevented you from planting.

(iv) A prevented planting amount of insurance will not be provided for any acreage:

(A) That does not constitute at least 20 acres or 20 percent of the acreage in the unit, whichever is less (Acreage that is less than 20 acres or 20 percent of the acreage in the unit will be presumed to have been intended to be planted to the insured crop planted in the unit, unless you can show that you had the inputs available before the final planting date to plant and produce another insured crop on the acreage);

(B) For which the actuarial table does not designate a premium rate unless a written agreement designates such premium rate;

(C) Used for conservation purposes or intended to be left unplanted under any program administered by the United States Department of Agriculture;

(D) On which another crop is prevented from being planted, if you have already received a prevented planting indemnity, guarantee or amount of insurance for the same acreage in the same crop year, unless you provide adequate records of acreage and production showing that the acreage was double-cropped in each of the last 4 years in which the insured crop was grown on the acreage;

(E) On which the insured crop is prevented from being planted, if any other crop is planted and fails, or is planted and harvested, hayed or grazed on the same acreage in the same crop year, (other than a cover crop as specified in paragraph (d)(2)(iii)(A) of this section, or a substitute crop allowed in paragraph (d)(2)(iii)(B) of this section), unless you provide adequate records of acreage and production showing that the acreage was double-cropped in each of the last 4 years in which the insured crop was grown on the acreage;

(F) When coverage is provided under the Catastrophic Risk Protection Endorsement if you plant another crop for harvest on any acreage you were prevented from planting in the same crop year, even if you have a history of double-cropping. If you have a Catastrophic Risk Protection Endorsement and receive a prevented planting indemnity, guarantee, or amount of insurance for a crop and are prevented from planting another crop on the same acreage, you may only receive the prevented planting indemnity, guarantee, or amount of insurance for the crop on which the prevented planting indemnity, guarantee, or amount of insurance is received; or

(G) For which planting history or conservation plans indicate that the acreage would have remained fallow for crop rotation purposes.

(v) For the purpose of determining eligible acreage for prevented planting coverage, acreage for all units will be combined and be reduced by the number of hybrid corn seed acres timely planted and late planted. For example, assume you have 100 acres eligible for prevented planting coverage in which you have a 100 percent share. The acreage is located in a single FSA Farm Serial Number which you insure as two separate optional units consisting of 50 acres each. If you planted 60 acres of hybrid corn seed on one optional unit and 40 acres of hybrid corn seed on the second optional unit, your prevented planting eligible acreage would be reduced to zero (*i.e.*, 100 acres eligible for prevented planting coverage minus 100 acres planted equals zero).

(6) In accordance with the provisions of section 6 (Report of Acreage) of the Basic Provisions (§ 457.8), you must report by unit any insurable acreage that you were prevented from planting. This report must be submitted on or before the acreage reporting date. For the purpose of determining acreage eligible for a prevented planting amount of insurance, the total amount of prevented planting and planted acres cannot exceed the maximum number of acres eligible for prevented planting coverage. Any acreage you report in excess of the number of acres eligible for prevented planting coverage, or that exceeds the number of eligible acres physically located in a unit, will be deleted from your acreage report.

14. Written Agreement

Designated terms of this policy may be altered by written agreement in accordance with the following:

(a) You must apply in writing for each written agreement no later than the sales closing date, except as provided in section 14(e);

(b) The application for a written agreement must contain all variable terms of the contract between you and us that will be in effect if the written agreement is not approved;

(c) If approved, the written agreement will include all variable terms of the contract, including, but not limited to, crop type or variety, the guarantee, premium rate, and price election;

(d) Each written agreement will only be valid for one year (If the written agreement is not specifically renewed the following year, insurance coverage for subsequent crop years will be in accordance with the printed policy); and

(e) An application for a written agreement submitted after the sales closing date may be approved if, after a physical inspection of the acreage, it is determined that no loss has occurred and the crop is insurable in accordance with the policy and written agreement provisions.

Signed in Washington, D.C., on December 20, 1996.

Kenneth D. Ackerman,

Manager, Federal Crop Insurance Corporation.

[FR Doc. 96–33067 Filed 12–31–96; 8:45 am]

BILLING CODE 3410–FA–P

Agricultural Marketing Service

7 CFR Part 906

[Docket No. FV96–906–4PR]

Oranges and Grapefruit Grown in the Lower Rio Grande Valley in Texas; Reapportionment of Membership on the Texas Valley Citrus Committee

AGENCY: Agricultural Marketing Service, USDA.

ACTION: Proposed rule.

SUMMARY: This proposed rule would reapportion the membership of the 15-member Texas Valley Citrus Committee (committee) established under the Federal marketing order regulating the handling of oranges and grapefruit grown in the Lower Rio Grande Valley in Texas. This action would provide for more equitable representation between cooperative and independent producers and handlers. This reapportionment would reduce the number of cooperative producer member positions from four to two and provide independent producers with those two positions, thus, increasing independent producer membership to seven positions. In addition, the number of cooperative handler member positions would be reduced from two to one, thereby increasing independent handler membership to five positions.

DATES: Comments must be received by February 3, 1997.

ADDRESSES: Interested persons are invited to submit written comments concerning this proposal. Comments must be sent in triplicate to the Docket Clerk, Fruit and Vegetable Division, AMS, USDA, P.O. Box 96456, room 2525–S, Washington, DC 20090–6456, Fax # (202) 720–5698. All comments should reference the docket number and the date and page number of this issue of the Federal Register and will be made available for public inspection in the Office of the Docket Clerk during regular business hours.

FOR FURTHER INFORMATION CONTACT: Belinda G. Garza, McAllen Marketing Field Office, Marketing Order Administration Branch, Fruit and Vegetable Division, 1313 E. Hackberry, McAllen, Texas 78501; telephone: (210) 682–2833, Fax # (210) 682–5942; or Charles L. Rush, Marketing Order Administration Branch, Fruit and Vegetable Division, AMS, USDA, P.O. Box 96456, room 2525–S, Washington, DC 20090–6456; telephone: (202) 690–3670, Fax # (202) 720–5698. Small businesses may request information on compliance with this regulation by contacting: Jay Guerber, Marketing Order Administration Branch, Fruit and Vegetable Division, AMS, USDA, P.O. Box 96456, room 2525–S, Washington, DC 20090–6456; telephone: (202) 720–2491, Fax # (202) 720–5698.

SUPPLEMENTARY INFORMATION: This proposal is issued under Marketing Agreement and Order No. 906 (7 CFR Part 906), as amended, regulating the handling of oranges and grapefruit grown in the Lower Rio Grande Valley in Texas, hereinafter referred to as the ''order.'' This order is effective under the Agricultural Marketing Agreement Act of 1937, as amended (7 U.S.C 601–674), hereinafter referred to as the ''Act.''

The Department of Agriculture (Department) is issuing this rule in conformance with Executive Order 12866.

This proposal has been reviewed under Executive Order 12988, Civil Justice Reform. This rule is not intended to have retroactive effect. If adopted, this proposal will not preempt any State or local laws, regulations, or policies, unless they present an irreconcilable conflict with this rule.

The Act provides that administrative proceedings must be exhausted before parties may file suit in court. Under section 608c(15)(A) of the Act, any handler subject to an order may file with the Secretary a petition stating that the order, any provision of the order, or any obligation imposed in connection with the order is not in accordance with law and request a modification of the order or to be exempted therefrom. A handler is afforded the opportunity for a hearing on the petition. After the hearing the Secretary would rule on the petition. The Act provides that the district court of the United States in any district in which the handler is an inhabitant, or has his or her principal place of business, has jurisdiction to review the Secretary's ruling on the petition, provided an action is filed not later than 20 days after date of the entry of the ruling.

Pursuant to requirements set forth in the Regulatory Flexibility Act (RFA), the Agricultural Marketing Service (AMS) has considered the economic impact of this action on small entities.

The purpose of the RFA is to fit regulatory actions to the scale of business subject to such actions in order that small businesses will not be unduly or disproportionately burdened. Marketing orders issued pursuant to the Act, and rules issued thereunder, are unique in that they are brought about through group action of essentially small entities acting on their own behalf. Thus, both statutes have small entity orientation and compatibility.

There are 17 handlers of oranges and grapefruit who are subject to regulation under the order and approximately 2,000 orange and grapefruit producers in the regulated area. Small agricultural service firms, which includes handlers, have been defined by the Small Business Administration (13 CFR 121.601) as those having annual receipts of less than $5,000,000, and small agricultural producers are defined as those having annual receipts of less than $500,000. The majority of handlers and producers of Texas oranges and grapefruit may be classified as small entities.

This proposed rule would reapportion the membership of the committee. This action is intended to provide for equitable and balanced representation between cooperative and independent producers and handlers and would not impose additional costs or burdens on producers and handlers.

Therefore, the AMS has determined that this proposed rule would not have a significant economic impact on a substantial number of small entities. Interested persons are invited to submit information on the regulatory and informational impacts of this action on small businesses.

Pursuant to section 906.18 of the order, the committee consists of 15 members. Each member has an alternate. Nine of the members are producers and six are handlers. Section 906.122 of the order's rules and regulations provides that the nine producer representatives be allocated so that four members represent cooperative marketing organizations, hereinafter referred to as cooperative producers, and five members represent independent marketing organizations, hereinafter referred to as independent producers. Section 906.122 further provides that the six handler representatives on the committee be allocated so that two members represent cooperative marketing organizations, hereinafter referred to as cooperative handlers, and four represent independent marketing organizations, hereinafter referred to as independent handlers.

Section 906.19 provides for a three-year term of office for committee members and their alternates. The terms of office of the committee are staggered so that one-third of the terms end every third year. Members and alternates serve in their designated positions during the portion of the term of office for which they are selected or until their respective successors are selected and have qualified.

Section 906.21 of the order authorizes the committee, with the Secretary's

approval, to reapportion membership between cooperative producer and handler members and independent producer and handler members as necessary to assure equitable representation on the committee. Such changes are authorized in order to reflect structural changes within the industry and changes in the amount of fruit handled by cooperative handlers in relation to fruit handled by independent handlers.

On August 27, 1996, the committee met to discuss, among other issues, committee representation and to determine whether any changes were warranted to foster more equitable representation. Changes in the Texas citrus industry have resulted in a reduction of the number of cooperative handlers in that industry subsequently resulting in a decrease in the amount of fruit handled by cooperative handlers. According to the committee's records, there were four cooperative organizations operating until 1984, prior to a freeze in the production area. From 1985 to 1995, there were two cooperative organizations handling Texas citrus. Presently, only one cooperative handler remains in operation.

As the number of cooperative handlers has decreased, so has the volume of fresh fruit accounted for by cooperatives. At the time committee membership was last reapportioned in 1969, cooperatives accounted for about 30 percent of fresh fruit shipments and about 45 percent of fruit harvested (which includes processed citrus). The volume of fresh fruit shipments accounted for by cooperatives has declined since that time, particularly after the last two freezes.

The committee is concerned that the cooperative segment of the industry is currently over-represented on the committee and that committee representation no longer reflects the current structure of the industry. The present situation has recently made it difficult to acquire cooperative representation on the committee, which could lead to potential problems in the future.

This proposed rule would change the composition of the committee by reducing cooperative producer positions on the committee from four to two, and increasing independent producer member positions from five to seven. In addition, cooperative handler representation would be reduced from two member positions to one, and independent handler positions would be increased from four to five. The proposed change would bring committee representation more in line with the Texas citrus industry's current structure. This change was unanimously recommended by the committee at its August 27 meeting.

The committee further recommended that current committee members complete their current terms of office where possible and new members be nominated where applicable to provide for full three-year terms of office for unexpired terms. Presently, the term of office of one of the four cooperative producer members expires on July 31, 1997, and three expire on July 31, 1999. The 1997 position, in addition to one of the 1999 positions, would be relinquished to independent producers. Also, there are presently two cooperative handler members, one of whose terms expires on July 31, 1998, and the other on July 31, 1999. One of those positions would be relinquished to independent handlers. The three terms of office relinquished to the independents would terminate on July 31 of the appropriate term. Determination of which cooperative producer and handler members currently serving unexpired terms would remain in their respective positions would be made by lot at the committee's subsequent nomination meetings.

The Texas citrus industry has historically demonstrated a policy of maintaining equitable representation among cooperative and independent producers and handlers. When the order was promulgated in 1960, two of the nine producer member positions and one of the six handler positions were allocated to cooperative members. In 1969, committee membership was reallocated to the present apportionment to reflect changes in the composition of the industry.

Cooperative producer member positions were increased from two to four and cooperative handler representation was increased from one to two. The changes also provided for a reduction in the number of independent producer and handler positions. Following the two major freezes, only one cooperative handler remains in operation. The committee recommended returning to the order's original apportionment to accommodate the shift in production. Reducing the total number of cooperative positions to three would bring representation closer in line with the proportion of fresh fruit shipments accounted for by the cooperative. Therefore, the committee's recommendation to revert to the committee's original apportionment would be achieved by removing § 906.122, which would result in reallocation of cooperative and independent producers and handlers to that reflected in § 906.18 of the order. Section 906.122, which provides that the production area be considered as one district for purposes of committee representation, would not be affected by this rule.

A 30-day comment period is provided to allow interested persons to respond to this proposal. All written comments received within the comment period will be considered prior to finalization of this rule.

List of Subjects in 7 CFR Part 906

Grapefruit, Marketing agreements, Oranges, Reporting and recordkeeping requirements.

For the reasons set forth in the preamble, 7 CFR part 906 is proposed to be amended as follows:

PART 906—ORANGES AND GRAPEFRUIT GROWN IN THE LOWER RIO GRANDE VALLEY IN TEXAS

1. The authority citation for 7 CFR part 906 continues to read as follows:

Authority: 7 U.S.C. 601–674.

2. Section 906.122 is removed.

Dated: December 26, 1996.

Robert C. Keeney,

Director, Fruit and Vegetable Division.

[FR Doc. 96–33328 Filed 12–31–96; 8:45 am]

BILLING CODE 3410–02–P

FEDERAL RESERVE SYSTEM

12 CFR Part 202

[Regulation B; Docket No. R–0955]

Equal Credit Opportunity

AGENCY: Board of Governors of the Federal Reserve System.

ACTION: Proposed rule.

SUMMARY: The Board is publishing for comment proposed revisions to Regulation B (Equal Credit Opportunity). The revisions would implement recent amendments to the Equal Credit Opportunity Act (ECOA). These amendments create a legal privilege for information developed by creditors as a result of ''self-tests'' that they voluntarily conduct to determine the level of their compliance with the ECOA. The Department of Housing and Urban Development will be publishing for comment a substantially similar proposal to revise the regulations implementing the Fair Housing Act.

DATES: Comments must be received on or before January 31, 1997.

ADDRESSES: Comments should refer to Docket No. R–0955, and may be mailed

to William W. Wiles, Secretary, Board of Governors of the Federal Reserve System, 20th Street and Constitution Avenue, N.W., Washington, D.C. 20551. Comments also may be delivered to Room B–2222 of the Eccles Building between 8:45 a.m. and 5:15 p.m. weekdays, or to the guard station in the Eccles Building courtyard on 20th Street, N.W. (between Constitution Avenue and C Street) at any time. Comments received will be available for inspection in Room MP–500 of the Martin Building between 9:00 a.m. and 5:00 p.m. weekdays, except as provided in 12 CFR 261.8 of the Board's rules regarding availability of information.

FOR FURTHER INFORMATION CONTACT: James A. Michaels, Senior Attorney, or Manley Williams, Staff Attorney, Division of Consumer and Community Affairs, Board of Governors of the Federal Reserve System, at (202) 452–3667 or 452–2412; for the hearing impaired *only,* Dorothea Thompson, Telecommunications Device for the Deaf, at (202) 452–3544.

SUPPLEMENTARY INFORMATION:

I. Background

The Equal Credit Opportunity Act (ECOA), 15 U.S.C. 1691, makes it unlawful for creditors to discriminate in any aspect of a credit transaction on the basis of sex, race, color, religion, national origin, marital status, age (provided the applicant has the capacity to contract), because all or part of an applicant's income derives from any public assistance, or because an applicant has in good faith exercised any right under the Consumer Credit Protection Act. The act is implemented by the Board's Regulation B (12 CFR Part 202).

On September 30, 1996, the President signed into law amendments to the ECOA as part of the Economic Growth and Regulatory Paperwork Reduction Act of 1996 (Pub. L. 104–208, 110 Stat. 3009) (1996 Act). Section 2302 of the 1996 Act creates a legal privilege for information developed by creditors through ''self-tests'' that are conducted to determine the level or effectiveness of their compliance with the ECOA, provided that appropriate corrective action is taken to address any possible violations that may be discovered. Privileged information may not be obtained by a government agency or credit applicant for use in an examination or investigation relating to fair lending compliance, or in any civil proceeding in which a violation of the ECOA is alleged. The 1996 Act also provides that a challenge to a creditor's claim of privilege may be filed in any court or administrative law proceeding with appropriate jurisdiction.

The Act directs the Board to issue implementing regulations, including a definition of what constitutes a ''self-test.'' After consultation with the federal agencies responsible for enforcing the ECOA and with the Department of Housing and Urban Development (HUD), the Board is publishing proposed rules to implement the 1996 Act's amendments to the ECOA. The 1996 Act also establishes a privilege for creditor self-testing under the Fair Housing Act (42 U.S.C. 3601 *et seq*). HUD will be publishing for comment substantially similar rules to implement the amendments to the Fair Housing Act.

II. Proposed Regulatory Provisions

The proposed amendment to Regulation B would implement the 1996 Act by defining what constitutes a privileged self-test. The Board proposes to define a ''self-test'' as any program, practice, or study that creates data or factual information about the creditor's compliance with the ECOA that is not available or derived from loan files or other records related to credit transactions. This includes but is not limited to the practice of using fictitious loan applicants (testers). The privilege would apply to the factual evidence generated by the self-test as well as any analysis or conclusions contained in reports prepared about the self-test. A self-test would not include any collection of data required by law or a creditor's review or evaluation of loan files.

The Board expects to publish a final rule in March 1997, which would become effective 30 days later. The 1996 Act provides that once the rule is issued, self-tests will become privileged even if they were conducted before the regulation's effective date. As an exception to this, self-tests previously conducted will not become privileged on the regulation's effective date if a court action or administrative proceeding has already commenced against the creditor alleging a violation of the ECOA or Regulation B or the Fair Housing Act. In addition, a self-test previously conducted will not become privileged on the regulation's effective date if any part of the report or results has already been disclosed.

III. Section-by-Section Analysis

Section 202.15 Incentives for Self-Testing and Self-Correction

15(a) General Rule

Proposed paragraph 15(a) states the general rule that the report or results of a creditor's self-test are privileged if the conditions specified in this rule are satisfied. The privilege applies whether the creditor conducts the self-test or employs the services of a third party. A self-test must, however, be conducted voluntarily; self-tests that are required by a government authority (including those conducted pursuant to a judicial order) would not qualify for the privilege. Similarly, any collection of data required by law would not be considered voluntary under this section. The privilege for self-testing is in addition to and independent of any other privilege that may exist, such as the attorney-client privilege or the privilege for attorney work product.

This paragraph would also implement the requirement imposed by the 1996 Act that a creditor take appropriate corrective action to address any possible violations identified by the self-test in order for the privilege to apply. A creditor must take whatever actions are reasonable in light of the scope of the possible violations to fully remedy both their cause and effects. This may include both prospective and retroactive relief. Guidance on a creditor's responsibility for taking appropriate corrective action is provided under paragraph 15(c).

Although corrective actions are required when a possible violation is found, a self-test is also privileged when it does not identify any possible violations and no corrective action is necessary. The Board believes that the effectiveness of the privilege as an incentive to self-test would be significantly undermined if it only applied when violations were discovered. If that were the case, the mere assertion of the privilege would be tantamount to an admission that violations had occurred. Under such circumstances, some creditors might be reluctant to use self-testing in light of the fact that the mere assertion of the privilege might prompt the filing of legal claims.

The Board also notes that a creditor's determinations about the type of corrective action needed, or a finding that no corrective action is required, would not be conclusive in determining whether the requirements of this paragraph have been satisfied. If a creditor's claim of privilege is challenged, it would be necessary to assess the need for corrective action or the type of corrective action that is appropriate based on a review of the self-testing results. Such an assessment might be accomplished by an adjudication where a judge may conduct an *in camera* inspection of the privileged documents.

Under the statute, the privilege applies only if the creditor has already taken or is in the process of taking appropriate corrective action. In some cases, the issue of whether certain information is privileged may arise before the corrective actions are fully underway. The rule requires, at a minimum, that the creditor establish a plan for corrective action, a means for monitoring the creditor's progress in implementing the plan, and activity to begin carrying out the plan. A schedule may be imposed by the court or agreed to by an agency or the other parties affected. A creditor's failure to fully implement planned corrective action may be cause for subsequently reevaluating whether the privilege applies.

15(b) Self-test defined

15(b)(1) Definition

Proposed paragraph 15(b)(1) states what constitutes a ''self-test'' for purposes of this rule. The 1996 Act does not define ''self-test'' and authorizes the Board to define by regulation the practices to be covered by the privilege. The Board proposes to define a ''self-test'' as any program, practice, or study used to create data or factual information about the creditor's compliance with the ECOA and Regulation B that is not available and cannot be derived from loan or application files or other records related to credit transactions. This definition of self-test includes but is not limited to the practice of using testers. For example, self-testing would also include a survey of mortgage customers conducted by a creditor for fair lending purposes, or a program specially designed to test loan officers' knowledge about fair lending laws.

In establishing the self-testing privilege, the Congress sought to encourage lenders to undertake voluntary efforts to assess their compliance with fair lending laws. The proposed definition is an incentive for creditors to use self-testing to monitor the pre-application stage of the loan process in particular; the pre-application process does not typically produce the type of documentation that lends itself to traditional file reviews. The privilege serves as an incentive by assuring that evidence of possible discrimination voluntarily gathered through a self-test will not be used against a creditor, provided the creditor takes appropriate corrective actions for any discrimination that is found. Although the legislative history focuses on the traditional use of matched-pair testers, it also recognizes that other testing methods may also be useful.

Under the proposed rule, the principal attribute of self-testing is that it constitutes a voluntary undertaking by the creditor to produce new factual evidence that otherwise would not be available from credit records. The proposed rule does not define ''self-test'' so broadly as to include all types of self-evaluation or self-assessment performed by a creditor. Self-evaluations involving creditor reviews of loan or application files, and reviews of HMDA data or similar types of records (such as broker or loan officer compensation records) that do not produce new data or factual evidence about a creditor's compliance would not be covered by the privilege. Accordingly, a compilation of data or a regression analysis derived from the data in existing loan files would not be privileged.

Although a broader definition encompassing such audits or evaluations would be within the Board's rulemaking authority under the statute, the Board does not believe that this broader definition of self-test is necessary. Principles of sound lending dictate that a creditor have adequate policies and procedures in place to ensure compliance with applicable laws and regulations, and that lenders adopt appropriate audit and control systems. These may take the form of compliance reviews, file analyses, the use of second-review committees, or other methods that examine creditor records kept in the ordinary course of business. Notwithstanding any evaluation performed by the creditor, the underlying loan records are themselves subject to examination by the regulatory and enforcement agencies and must usually be disclosed to a private litigant alleging a violation. The Board believes that creditors already have adequate incentive to conduct such routine compliance reviews and file analyses as a good business practice and to avoid or minimize potential liability for violations.

Insured financial institutions also have an incentive to conduct such audits to assist the regulatory agencies in streamlining the bank examination process and thereby minimizing the burden and costs associated with that process. A broader definition of self-test would allow creditors to withhold information relating to self-audits from a regulatory agency. At this time, the Board does not believe it is necessary to extend the privilege to audits of existing business records, which could have an unintended negative effect on the levels of cooperation between creditors and the regulatory agencies. The Board solicits public comment, however, on the scope of the proposed definition of ''self-test'' and whether a broader definition would adversely affect the ability of supervisory or enforcement agencies or private parties to obtain needed information or whether it would provide needed incentive for creditor monitoring and self-correction.

In order to qualify for the privilege, a self-test must be designed and conducted to assess the level and effectiveness of the creditor's compliance with the rules prohibiting discrimination or discouraging loan applications on a prohibited basis. Testing for compliance with the other regulatory requirements of Regulation B is not privileged. For example, a test to determine whether adverse action notices are mailed within applicable time limits would not be privileged. A self-test designed for other purposes, such as a self-test designed to observe employees' efficiency and thoroughness in meeting customer needs, is not covered by the privilege even if evidence of discrimination is uncovered incidentally.

15(b)(2) Examples

Proposed paragraph 15(b)(2) gives examples of some activities that would and would not be included as self-tests for purposes of this section.

15(b)(3) Types of information covered

Under the 1996 Act, the privilege covers the report or results of a self-test. Proposed paragraph 15(b)(3) clarifies that this includes any data generated by the self-test and any analysis of such data, and any workpapers or draft documents.

15(b)(4) Types of information not covered

The 1996 Act does not prohibit an agency or applicant from requesting information about whether a creditor has conducted a self-test. Proposed paragraph 15(b)(4) clarifies the right of a government agency or private litigant to obtain sufficient information about the existence of the self-test, including its scope or the methodology used in conducting the test, to determine whether to challenge a creditor's claim of privilege. The 1996 Act provides that a challenge to a creditor's claim of privilege may be filed in any court or administrative law proceeding with appropriate jurisdiction. The Board expects such challenges to be resolved according to the laws and procedures used for other types of privilege claims. This may include the use of *in camera* proceedings, the filing of documents and pleadings with the court under seal,

or the production of documents to other parties under an appropriate protective order that limits the purpose for which they may be used.

15(c) Appropriate corrective action

Proposed paragraph 15(c) clarifies that a determination of whether a creditor has taken appropriate corrective action must be made on a case-by-case basis. Under the statute, an issue regarding the sufficiency of the corrective action may be resolved in a court or administrative law proceeding. A creditor must take whatever actions are reasonable given the nature and scope of the possible violations to fully remedy both their cause and effects. To determine the appropriate corrective action, the creditor must: (1) identify the policies or practices that are the cause of the possible violation, such as inadequate or improper lending policies, failure to implement established policies, employee conduct, or other causes; and (2) assess the extent and scope of any possible violation, by determining the stages of the application process and the areas of operations likely to be affected by those policies or practices, and the particular branches or offices involved.

The Board proposes to provide additional guidance in the Official Staff Commentary to Regulation B, by including a list of sample corrective actions, including both prospective and retroactive relief. Not all of the listed corrective measures would be appropriate in every case. Comments are solicited on this approach.

In 1994, the Interagency Task Force on Fair Lending, representing the ten federal agencies responsible for implementing and enforcing the fair lending laws, issued a policy statement on credit discrimination (59 FR 18266, 18270–71 (April 15, 1994)). That policy statement advised lenders that discover discriminatory practices as a result of a self-test to ''make all reasonable efforts to determine the full extent of the discrimination and its cause'' and to ''determine whether the practices were grounded in defective policies, poor implementation or control of those policies, or isolated to a particular area of the lender's operations.'' The policy statement also provided a list of prospective and retroactive corrective actions that might be appropriate depending on the circumstances.

The proposed regulation and revisions to the Official Staff Commentary substantially follow the discussion of self-testing and the list of sample corrective actions set out in the Interagency Policy Statement. Appropriate corrective action may include, but is not limited to, one or more of the following:

1. Identifying persons whose applications may have been inappropriately processed; offering to extend credit if the applications were improperly denied; compensating applicants for damages, both out-of-pocket and compensatory; and notifying them of their legal rights.

2. Correcting institutional polices or procedures that may have contributed to possible discrimination, and adopting new policies as appropriate;

3. Identifying and then training and/or disciplining the employees involved;

4. Developing outreach programs, marketing strategies, or loan products to more effectively serve segments of the lender's markets that may have been affected by the possible discrimination; and

5. Improving audit and oversight systems to avoid a recurrence of the possible violations.

A creditor must take corrective action that is commensurate with the scope of the discrimination and is specifically tailored to address the particular type of problem identified by the self-test. For example, if self-testing reveals that minority applicants do not receive the same level of assistance during the pre-application stage, but reveals no discrepancy in loan decisions, underwriting criteria or credit terms for loan applications that were actually filed, it may be sufficient for a creditor to take prospective action relating to the creditor's policies and employee training. On the other hand, if a self-test reveals that loan officers treat the submission of loan applications by minorities differently by quoting more onerous loan terms such as larger down-payments or higher interest rates, in addition to prospective action (such as outreach efforts) retroactive relief may also be required; appropriate corrective action would include a review of existing loan files to determine if minority borrowers were actually granted loans on less favorable terms.

15(d)(1) Scope of privilege

Proposed paragraph 15(d)(1) explains the nature of the qualified privilege afforded by the new law. This paragraph states that privileged documents may not be obtained by a government agency for use in an examination or investigation relating to fair lending compliance, or by a government agency or applicant (including prospective applicants alleging they were discouraged from pursuing an application on a prohibited basis) in any civil proceeding in which a violation of the ECOA or Regulation B is alleged. There may be other proceedings where the privilege would not apply, for example, if the documents were sought in litigation unrelated to fair lending issues. Comment is solicited on how the rule should apply to state agencies for purposes of the ECOA.

15(d)(2) Loss of privilege

Proposed paragraph 15(d)(2) describes the circumstances that would result in documents losing their privileged status. As provided in the 1996 Act, the results or report of a self-test, including any data generated by the self-test, will not be considered privileged under this section once the creditor has voluntarily disclosed all or part of the contents to any government agency, loan applicant, or the general public. This is explained in proposed paragraph 15(d)(2)(i).

If a creditor elects to rely on the self-testing results as a defense to alleged violations of the ECOA in court or administrative proceedings, the privilege would not apply if the documents are sought in connection with those proceedings—the disclosure would be treated as a voluntary disclosure under this paragraph. This loss of privilege is covered in proposed paragraph 15(d)(2)(ii). However, a creditor's involuntary production of records in response to a judicial order does not evidence the creditor's intent to give up the privilege. Accordingly, if such disclosures are made in a limited fashion that does not constitute a disclosure to the general public, for example under a protective order, that disclosure would not affect the privileged status of the documents.

The 1996 Act provides that the report or results of a self-test are not privileged if they are disclosed by a person with lawful access to the report or results. The statute draws no distinction based on whether the person was authorized by the creditor to make the particular disclosure.

The Board solicits comments on whether it should establish by regulation an exception to the general rule in paragraph 15(d)(2)(i), whereby creditors could voluntarily share privileged information with a federal or state bank supervisory agency or law enforcement agency without causing the information to lose its privileged status when it is subsequently sought by private litigants. However, such disclosures would cause the documents or information to lose their privileged status with respect to all supervisory or enforcement agencies. The purpose of the exception would be to encourage greater cooperation between creditors and enforcement agencies in monitoring compliance and to encourage creditors

to seek guidance from the agencies in developing appropriate corrective action.

As noted above, a creditor's claim of privilege may be challenged in an appropriate court or administrative law proceeding. Proposed paragraph 15(d)(2)(iii) addresses the situation where a creditor seeks to assert the privilege but fails or is unable to produce information pertaining to the self-test that is necessary for determining whether the privilege applies. The results or report of a self-test would not be privileged in such cases. The judge may determine in each case whether the creditor has met its burden of producing the relevant evidence.

15(d)(3) Limited use of privileged information

Proposed paragraph 15(d)(3) implements the statutory provision that allows for a limited use of privileged documents. The report or results of a privileged self-test may be obtained and used for the purpose of determining a penalty or remedy after a violation of the ECOA or Regulation B has been formally adjudicated or admitted. The production of privileged documents for this purpose does not evidence the creditor's intent to give up the privilege. If such disclosures are made in a limited fashion that does not constitute a disclosure to the general public, the disclosure would not affect the privileged status of the documents.

A finding by a government agency, as part of a bank examination or investigation, that discrimination has occurred would not constitute an adjudication for this purpose. If such findings lead to a formal adjudication or an admission by the creditor, the limited use of privilege documents under this paragraph would apply.

The 1996 Act also provides that information disclosed for purposes of determining a penalty or remedy may be used only for the particular proceeding in which the adjudication or admission is made. Accordingly, parties who obtain such information are prohibited from any further dissemination and the judge in that proceeding may issue an appropriate order.

15(e) Record retention

Proposed paragraph 15(e) provides that a creditor has a duty to retain self-testing records for a limited time. This retention is necessary to facilitate a determination about whether the results or report of the self-test are privileged or for the purpose of determining the appropriate penalty or remedy when a violation has been adjudicated or admitted. The Board proposes to adopt the same standard for the retention of self-testing records as applies to other records, which must be retained for 25 months.

IV. Form of Comment Letters

Comment letters should refer to Docket No. R–0955. The Board requests that, when possible, comments be prepared using a standard courier typeface with a type size of 10 or 12 characters per inch. This will enable the Board to convert the text into machine-readable form through electronic scanning, and will facilitate automated retrieval of comments for review. Comments may also be submitted on 3.5 inch or 5.25 inch computer diskettes, in any IBM-compatible DOS-based format. Comments on computer diskettes must be accompanied by a paper version.

The comment period ends on January 31, 1997. Normally the Board provides a 60-day comment period, in keeping with the Board's policy statement on rulemaking (44 FR 3957, January 19, 1979). In this case, the 1996 Act directs the Board to prescribe final regulations by March 31, 1997. The Board believes that an abbreviated comment period is necessary in order to meet this schedule.

V. Regulatory Flexibility Analysis

The proposed amendments implement the legal privilege created by the 1996 Act for certain information that creditors may voluntarily develop about their compliance with the fair lending laws through self-testing. The regulation does not impose any significant regulatory requirements on creditors. Consequently, the proposed amendments are not likely to have a significant impact on institutions' costs, including the costs to small institutions.

VI. Paperwork Reduction Act

In accordance with the Paperwork Reduction Act of 1995 (44 U.S.C.3506), the Board has reviewed the proposed rule under authority delegated to the Board by the Office of Management and Budget (OMB). 5 CFR 1320 Appendix A.1. Comments on the collection or disclosure of information associated with this regulation should be sent to the Office of Management and Budget, Paperwork Reduction Project (7100–0201), Washington, DC 20503, with copies of such comments sent to Mary M. McLaughlin, Chief, Financial Reports Section, Division of Research and Statistics, Mail Stop 97, Board of Governors of the Federal Reserve System, Washington, DC 20551.

Regulation B applies to individuals and businesses that regularly extend credit or participate in the decision of whether or not to extend credit. This includes all types of creditors. Under the Paperwork Reduction Act, however, the Board accounts for the paperwork burden associated with Regulation B only for state member banks. Any estimates of paperwork burden for other financial institutions would be provided by the federal agency or agencies that supervise those lenders. There are 1,028 state member banks that are respondents and/or recordkeepers, with an estimated average frequency of 4,765 responses per bank each year. The current estimated burden for Regulation B ranges from fifteen seconds to five minutes per response. The combined annual burden for all state member banks under Regulation B is estimated to be 129,015 hours.

The collection of information requirements in the proposed regulation are found in 12 CFR 202.15(e). The recordkeepers are for-profit financial institutions, including small businesses. Records relating to self-tests must be retained for at least twenty-five months. The purpose is to facilitate the determination about whether the results or report of a creditor's self-test are privileged. The recordkeeping burden associated with the proposal consists of the additional effort necessary to retain self-testing records; it does not include the effort necessary to conduct and document the self-test.

The privilege for information developed through self-tests is intended to serve as an incentive for lenders to undertake voluntary efforts to assess their compliance with fair lending laws. The Federal Reserve welcomes comments that would help it estimate the number of state member banks that would use self-testing under the proposal. At a typical state member bank that conducts one self-testing program per year, it is estimated to take between one and eight hours (or an average of two hours) for the additional effort to retain the relevant records. Some portion of banks that conduct self-tests will find errors in compliance and will have to take appropriate corrective action. The amount of time needed would depend on the nature and scope of the possible violation. The Federal Reserve estimates that the recordkeeping associated with corrective action would take an additional two to twenty hours, with an average of eight recordkeeping burden hours annually. There is estimated to be no annual cost burden over the annual hour burden, and no capital or start up costs.

Because the records would be maintained at state member banks, no

issue of confidentiality under the Freedom of Information Act arises.

Comments are also invited on: a. whether the proposed collection of information is necessary for the proper performance of the Federal Reserve's functions; including whether the information has practical utility; b. the accuracy of the Federal Reserve's estimate of the burden of the proposed information collection, including the cost of compliance; c. ways to enhance the quality, utility, and clarity of the information to be collected; and d. ways to minimize the burden of information collection on respondents, including through the use of automated collection techniques or other forms of information technology.

An agency may not collect or sponsor the collection or disclosure of information, and an organization is not required to collect or disclose information unless a currently valid OMB control number is displayed. The OMB control number for Regulation B is 7100–0201.

List of Subjects in 12 CFR Part 202

Aged, Banks, Banking, Civil rights, Credit, Federal Reserve System, Marital status discrimination, Penalties, Religious discrimination, Reporting and recordkeeping requirements, Sex discrimination.

For the reasons set forth in the preamble, the Board proposes to amend 12 CFR part 202 as set forth below:

PART 202—EQUAL CREDIT OPPORTUNITY (REGULATION B)

1. The authority citation for Part 202 would continue to read as follows:

Authority: 15 U.S.C. 1691–1691f.

2. Section 202.15 would be added to read as follows:

§ 202.15 Incentives for self-testing and self-correction

(a) *General rule.* If a creditor voluntarily conducts or authorizes a third party to conduct a self-test, the report or results of the self-test are privileged as provided in this section if the creditor has taken or is taking appropriate corrective action to address any possible violations identified by the self-test. A self-test required by any government authority is not privileged.

(b) *Self-test defined*—(1) *Definition.* A self-test is any program, practice, or study that:

(i) Creates data or factual information that is not available and cannot be derived from loan or application files or other records related to credit transactions; and

(ii) Is used to determine the extent or effectiveness of the creditor's compliance with the regulation's prohibition on discrimination in § 202.4 or the prohibition on discouraging applications for credit in § 202.5(a).

(2) *Examples.* Self-testing includes, but is not limited to, the practice of using fictitious applicants for credit (testers). Self-testing does not include the collection of data required by law or by any government authority, or a creditor's review or evaluation of loan files.

(3) *Types of information covered.* The privilege applies to the report or results of a self-test, including any data generated by the self-test and any analysis of such data, and any workpapers or draft documents.

(4) *Types of information not covered.* The privilege does not cover information about whether a creditor has conducted a self-test, or information concerning the scope of or the methodology used in conducting the self-test.

(c) *Appropriate corrective action.* Whether a creditor has taken or is taking appropriate corrective action will be determined on a case-by-case basis. A creditor must take whatever action is reasonable in light of the scope of the possible violations to fully remedy both their cause and effects. Corrective action includes both prospective and retroactive relief, as may be appropriate. To determine the appropriate corrective action, the creditor must:

(1) Identify the policies or practices that are the likely cause of the possible violation, such as inadequate or improper lending policies, failure to implement established policies, employee conduct, or other causes; and

(2) Assess the extent and scope of any possible violation, by determining the stages of the application process, the areas of the creditor's operations likely to be affected by the policies or practices identified, and the particular branches or offices involved.

(d)(1) *Scope of privilege.* The report or results of a privileged self-test may not be obtained or used:

(i) By a government agency in any examination or investigation relating to compliance with the act or the regulations in this part; or

(ii) By a government agency or an applicant (including a prospective applicant who alleges a violation of § 202.5(a)) in any proceeding or civil action in which a violation of the act or regulation is alleged.

(2) *Loss of privilege.* The report or results of a self-test are not privileged under paragraph (d)(1) of this section if the creditor or a person with lawful access to the self-test:

(i) Voluntarily discloses all or any part of the report or results of the self-test or any privileged information to an applicant or government agency or to the public; or

(ii) Refers to or describes the report or results of the self-test or any privileged information as a defense to charges that the creditor has violated the act or the regulations in this part; or

(iii) If the creditor fails or is unable to produce required records or information pertaining to the self-test that are necessary to determine whether the privilege applies.

(3) *Limited use of privileged information.* Notwithstanding the provisions of paragraph (d)(1) of this section, the report or results of a privileged self-test may be obtained and used by an applicant or government agency for the sole purpose of determining a penalty or remedy for a violation of the act or this regulation that has been adjudicated or admitted. Disclosures made for this limited purpose may be used only for the particular proceeding in which the adjudication or admission was made, and remains privileged under paragraph (d)(1) of this section.

(e) *Record retention.* For 25 months after a self-test has been conducted, the creditor shall retain information about the self-test, including any corrective action taken to address possible violations identified by the self-test. A creditor shall retain information beyond 25 months if it has actual notice that it is under investigation or is subject to an enforcement proceeding for an alleged violation, or if it has been served with notice of a civil action. In that case, the creditor shall retain the information until final disposition of the matter, unless an earlier time is allowed by the agency or court order.

3. Supplement I to Part 202 would be amended by adding *Section 202.15—Incentives for Self-Testing and Self-Correction,* to read as follows:

Supplement I to Part 202—Official Staff Interpretations

* * * * *

Section 202.15—Incentives for Self-Testing and Self-Correction

15(a) General rule

1. The privilege for self-testing is in addition to and independent of any other privilege that may exist, such as the attorney-client privilege or the privilege for attorney work product.

2. Although corrective actions are required when a possible violation is found, a self-test that identifies no possible violations and requires no corrective action is also

privileged. A creditor's determination about the type of corrective action needed, or a finding that no corrective action is required, is not conclusive in determining whether the requirements of this paragraph have been satisfied. If a creditor's claim of privilege is challenged, an assessment of the need for corrective action or the type of corrective action that is appropriate must be based on a review of the self-testing results. Such an assessment might be accomplished by an adjudication where a judge conducts an in camera inspection of the privileged documents.

3. The privilege applies only if the creditor has taken or is taking the appropriate corrective action. In some cases, the issue of whether certain information is privileged may arise before the corrective actions are fully underway. The rule requires, at a minimum, that the creditor establish a plan for corrective action, a means for monitoring the creditor's progress in implementing the plan, and activity to begin carrying out the plan. A schedule may be imposed by the court or agreed to by an agency or the other parties affected.

15(b) Self-test defined

15(b)(1) Definition

1. The principal attribute of self-testing is that it constitutes a voluntary undertaking by the creditor to produce new data or factual information that otherwise would not be available and could not be derived from loan or application files or other records related to credit transactions. A ''self-test'' includes but is not limited to the practice of using fictitious loan applicants (also known as testers or mystery shoppers). For example, self-testing would also include a survey of mortgage customers conducted by a creditor for fair lending purposes or a program specially designed to test loan officers' knowledge about fair lending laws. Self-evaluations involving creditor reviews of loan files, and reviews of HMDA data or similar types of records (such as broker or loan officer compensation records) do not produce new information about a creditor's compliance and would not be covered by the privilege. Accordingly, a compilation of data or a regression analysis derived from the data in existing loan files would not be privileged.

2. To qualify for the privilege, a self-test must be designed and conducted to assess the level and effectiveness of the creditor's compliance with the rules prohibiting discrimination or discouraging loan applications on a prohibited basis. Self-testing for compliance with other regulatory requirements of Regulation B is not privileged.

15(c) Appropriate corrective action

1. A creditor must take whatever action is reasonable in light of the scope of the possible violations to fully remedy both their cause and effects. Appropriate corrective action may include, but is not limited to, one or more of the following:

i. Identifying persons whose applications may have been inappropriately processed; offering to extend credit if the applications were improperly denied; compensating applicants for damages, both out-of pocket and compensatory; and notifying them of their legal rights;

ii. Correcting institutional polices or procedures that may have contributed to possible discrimination, and adopting new policies as appropriate;

iii. Identifying and then training and/or disciplining the employees involved;

iv. Developing outreach programs, marketing strategies, or loan products to more effectively serve segments of the lender's markets that may have been affected by the possible discrimination; and

v. Improving audit and oversight systems to avoid a recurrence of the possible violations.

15(d)(2) Loss of privilege

Paragraph 15(d)(2)(iii)

1. A creditor's claim of privilege may be challenged in an appropriate court or administrative law proceeding. The results or report of a self-test are not privileged if the creditor fails or is unable to produce the relevant information pertaining to the self-test that is necessary for determining whether the privilege applies. A judge may determine in each case whether the creditor has met its burden of producing the relevant evidence.

* * * * *

By order of the Board of Governors of the Federal Reserve System, December 20, 1996.

William W. Wiles,

Secretary of the Board.

[FR Doc. 96–32919 Filed 12–31–96; 8:45 am]

BILLING CODE 6210–01–P

---

12 CFR Part 213

[Regulation M; Docket No. R–0952]

Consumer Leasing

AGENCY: Board of Governors of the Federal Reserve System.

ACTION: Proposed rule.

SUMMARY: The Board is publishing for comment proposed revisions to Regulation M, which implements the Consumer Leasing Act. The act requires lessors to provide uniform cost and other disclosures about consumer lease transactions. The proposed revisions primarily implement amendments to the act contained in the Economic Growth and Regulatory Paperwork Reduction Act of 1996, which streamline the advertising disclosures for lease transactions. In addition, the proposal contains several technical amendments that would be made to the regulation.

DATES: Comments must be received by February 7, 1997.

ADDRESSES: Comments should refer to Docket No. R–0952, and may be mailed to William W. Wiles, Secretary, Board of Governors of the Federal Reserve System, 20th Street and Constitution Avenue, N.W., Washington, DC 20551. Comments also may be delivered to Room B–2222 of the Eccles Building between 8:45 a.m. and 5:15 p.m. weekdays, or to the guard station in the Eccles Building courtyard on 20th Street, N.W. (between Constitution Avenue and C Street) at any time. Comments may be inspected in Room MP–500 of the Martin Building between 9:00 a.m. and 5:00 p.m. weekdays, except as provided in 12 CFR 261.8 of the Board's rules regarding the availability of information.

FOR FURTHER INFORMATION CONTACT: Kyung H. Cho-Miller or Obrea O. Poindexter, Staff Attorneys, Division of Consumer and Community Affairs, Board of Governors of the Federal Reserve System, Washington, DC 20551, at (202) 452–2412 or 452–3667. Users of Telecommunications Device for the Deaf *only* may contact Dorothea Thompson, at (202) 452–3544.

SUPPLEMENTARY INFORMATION:

I. Background on the Consumer Leasing Act and Regulation M

The Consumer Leasing Act (CLA), 15 U.S.C. 1667–1667e, was enacted into law in 1976 as an amendment to the Truth in Lending Act (TILA), 15 U.S.C. 1601 *et seq.* The CLA generally applies to consumer leases of personal property in which the contractual obligation does not exceed $25,000 and has a term of more than four months. An automobile lease is the most common type of consumer lease covered by the act. Under the act, lessors are required to provide uniform cost and other information about consumer lease transactions.

The Board was given rulewriting authority, and its Regulation M (12 CFR part 213) implements the CLA. An official staff commentary interprets the regulation.

The Board recently completed a review of Regulation M, pursuant to its policy of periodically reviewing its regulations, and approved a final rule in September 1996 substantially revising the regulation to update the disclosure requirements and to carry out more effectively the purposes of the Act (61 FR 52246, October 7, 1996).

II. Proposed Regulatory Provisions

This proposed rulemaking contains a few technical amendments to the regulation. For example, the model clause for providing a description of the leased property is added and the example of an annual charge as an other charge is deleted on the open- and closed-end model forms. All the proposed technical amendments are discussed in detail in the section-by-section analysis.

In the September 1996 final rule, the advertising provisions implemented amendments to the CLA contained in the Riegle Community Development and Regulatory Improvement Act of 1994 (Pub. L. 103–325, 108 Stat. 2160), allowing a toll-free number or a print advertisement to substitute for certain lease disclosures in radio commercials (which was expanded in the final rule to television commercials).

The advertisement provisions were amended and streamlined on September 30, 1996, when the Congress enacted the Economic Growth and Regulatory Paperwork Reduction Act of 1996 (Pub. L. 104–208, 110 Stat. 3009) (the 1996 Act). The Board's proposed rule implements the statutory changes, which are discussed in detail below in § 213.7.

III. Section-by-Section Analysis

Section 213.4 Content of disclosures

4(n) Fees and Taxes

In the September 1996 final rule, paragraph 4(n) of this section stated that the lessor must disclose the total dollar amount of all official and license fees, registration, title, or taxes required to be paid ''to the lessor'' in connection with the lease. Adding ''paid to the lessor'' narrowed the scope of the disclosure from the previous requirement. No substantive change to the requirement was intended. Thus, the phrase ''to the lessor'' would be deleted from this section.

4(o) Insurance

The Board proposes to revise the captions for paragraph 4(o) (1) and (2) to change the focus from voluntary and required insurance. The new captions more accurately reflect the requirement for the insurance disclosure—that insurance obtained through the lessor or through a third party, regardless of whether it is required or voluntary, must be disclosed.

Section 213.5 Renegotiations, Extensions, and Assumptions

5(d) Exceptions

Under Regulation M, new disclosures generally are required where a covered lease transaction is renegotiated or extended; however, under paragraph 5(d)(1) new disclosures are not required if the ''lease charge'' is reduced in a renegotiation or an extension of an existing lease. This exception was moved from the official staff commentary to the regulation in the final rule approved in September 1996. For clarity and consistency in terminology throughout the regulation, the Board proposes to replace the term ''lease charge'' with the term ''rent charge.''

Section 213.7 Advertising

The advertising provisions in Regulation M currently require additional disclosure if an advertisement states any of the following terms: the amount of any payment; the number of required payments; or a statement of any capitalized cost reduction or other payment required prior to or at consummation, or that no payment is required. Under the amendments to the CLA contained in the 1996 Act, an advertisement that states the number of required payments would no longer trigger additional disclosures.

The 1996 Act also changes the items that must be disclosed (to the extent applicable) when a triggering term is stated in an advertisement. The current disclosures and the changes made by the 1996 Act are as follows:

(1) That the transaction advertised is a lease. No change was made in this disclosure.

(2) The total amount due at lease signing, or that no payment is required. This disclosure has been expanded to also include amounts due at delivery if delivery occurs after consummation.

(3) The number, amounts, due dates or periods of scheduled payments, and total of such payments under the lease. The total of scheduled payments is eliminated as a required disclosure.

(4) A statement of whether or not the lessee has the option to purchase the leased property, and where the lessee has the option to purchase at the end of the lease term, the purchase-option price. This disclosure has been eliminated entirely.

(5) A statement of the amount, or the method for determining the amount, of the lessee's liability (if any) at the end of the lease term. This disclosure has been eliminated entirely.

(6) For an open-end lease, a statement of the lessee's liability (if any) for the difference between the residual value of the lease property and its realized value at the end of the lease term. This disclosure was simplified to require a short statement that an additional charge may be imposed.

The 1996 Act also adds as an additional disclosure of a statement on whether or not a security deposit is required.

7(b) Clear and Conspicuous Standard

7(b)(1) Amount Due at Lease Signing

The general rule in this paragraph states that any reference to a charge that is part of the total amount due at lease signing may not be more prominent than the disclosure of the total amount due at lease signing. The amount of any capitalized cost reduction (or no capitalized cost reduction) is provided as an example of an amount that is a part of the total amount due at lease signing. The Board proposes to delete this example from this paragraph and to move it to the official staff commentary.

7(d) Advertisement of Terms That Require Additional Disclosure

7(d)(1) Triggering Terms

Pursuant to the 1996 Act, the Board proposes to delete paragraph 7(d)(1)(ii). Merely stating in an advertisement the number of required lease payments, for example, ''36 payments,'' no longer ''triggers'' the additional disclosures in paragraph 7(d)(2). Paragraph 7(d)(1)(iii) would be redesignated as paragraph 7(d)(1)(ii).

7(d)(2) Additional Terms

An advertisement stating any item listed in paragraph 7(d)(1) is required to state the additional disclosures in paragraph 7(d)(2), as applicable. As discussed previously, the 1996 Act amends many of the required additional disclosures in this paragraph. The following proposed changes implement the statutory amendments.

The 1996 Act expands the disclosure of the total amount due at lease signing in paragraph 7(d)(2)(ii) to include ''amounts paid at delivery, whichever occurs later.'' Prior to the amendments, a delivery charge paid after consummation was not included in the total amount due at lease signing in § 213.4(b) or in this section. Under the proposed changes to implement the statutory amendment, the delivery charge would be included in the total even if it was paid after consummation. The Board does not propose to expand the disclosure under § 213.4 to parallel the new advertising rule.

The total of scheduled payments disclosure from paragraph 7(d)(2)(iii), all of paragraph 7(d)(2)(iv), and all of paragraph 7(d)(2)(v) will be deleted. A statement of whether or not a security deposit is required is added by the statute and proposed as paragraph 7(d)(iv). For an open-end lease, the amended statute requires a statement that an extra charge may be imposed at the end of the lease term; the regulatory provision is redesignated as paragraph 7(d)(2)(v).

7(f) Alternative Disclosures—Television or Radio Advertisements

7(f)(1) Toll-Free Number or Print Advertisement

The 1996 Act deletes the ''total of scheduled payments'' as a required additional disclosure under section 184(a), the general advertising disclosures, but not in section 184(c),

which governs radio advertisements. Section 105(a) of the TILA provides that the Board's regulations ''may contain such classifications, differentiations, or other provisions, and may provide for such adjustments and exceptions for any class of transactions, as in the judgment of the Board are necessary or proper to effectuate the purposes of [the CLA], to prevent circumvention or evasion thereof, or to facilitate compliance therewith.'' The Board does not believe that the Congress intended to require more disclosures for radio advertisements than other advertisements. Accordingly, the Board proposes to delete the disclosure of the ''total of scheduled payments'' from section 184(c) on radio advertisements pursuant to its exception authority under section 105(a).

Appendices

Lessors are required to provide a description of leased property under the CLA and § 213.4(a) of Regulation M. The Board proposes to amend the model forms for open- and closed-end leases disclosures to add among the nonsegregated disclosures a model clause for describing leased property.

The Board proposes to amend the model forms for open- and closed-end leases by deleting ''annual tax'' as an example of an other charge. Third-party fees or charges paid to the lessor but not retained by the lessor such as taxes are not included in the ''other charges'' disclosure.

IV. Form of Comment Letters

Comment letters should refer to Docket No. R–0952 and, when possible, should use a standard Courier typeface with a type size of 10 or 12 characters per inch. This will enable the Board to convert the text to machine-readable form through electronic scanning, and will facilitate automated retrieval of comments for review. Also, if accompanied by an original document in paper form, comments may be submitted on 3½ inch or 5¼ inch computer diskettes in any IBM-compatible DOS-based format.

The comment period ends on February 7, 1997. Normally, the Board provides a 60-day comment period, in keeping with the Board's policy statement on rulemaking (44 FR 3957, January 19, 1979). The proposed regulatory revisions primarily implement changes in the law made by the 1996 Act that streamline the advertising provisions and, in addition, make a few technical changes to Regulation M. The Board believes that it is desirable to ensure that a final rule takes effect along with the final rule approved in September 1996, which requires issuing a final rule by April 1, 1997. Accordingly, the Board is providing an abbreviated comment period.

V. Regulatory Flexibility Analysis

In accordance with section 3(a) of the Regulatory Flexibility Act (5 U.S.C. 603), the Board's Office of the Secretary has reviewed the proposed amendments to Regulation M. Overall, the amendments are not expected to have any significant impact on small entities. The proposed regulatory revisions, primarily required to implement the 1996 Act, ease compliance by streamlining the advertising provisions. A final regulatory flexibility analysis will be conducted after consideration of comments received during the public comment period.

VI. Paperwork Reduction Act

In accordance with the Paperwork Reduction Act of 1995 (44 U.S.C. 3506; 5 CFR 1320 Appendix A.1), the Board reviewed the proposed rule under the authority delegated to the Board by the Office of Management and Budget. Comments on the collections of information should be sent to the Office of Management and Budget, Paperwork Reduction Project (7100–0202), Washington, DC 20503, with copies of such comments to be sent to Mary M. McLaughlin, Chief, Financial Reports Section, Division of Research and Statistics, Mail Stop 97, Board of Governors of the Federal Reserve System, Washington, DC 20551.

The respondents are individuals or businesses that regularly lease, offer to lease, or arrange for the lease of personal property under a consumer lease. The purpose of the disclosures associated with Regulation M is to ensure that lessees of personal property receive meaningful information that enables them to compare lease terms with other leases and, where appropriate, with credit transactions. Records, required to evidence compliance with the regulation, must be retained for twenty-four months. The revisions to the collection of information requirements in this proposed rule are found in 12 CFR 213.4, 213.5, and 213.7 and appendices A–1 and 2.

Regulation M applies to all types of financial institutions, not just state member banks. Under the Paperwork Reduction Act, however, the Federal Reserve accounts for the paperwork burden associated with Regulation M only for state member banks. Any estimates of paperwork burden for institutions other than state member banks affected by the amendments would be provided by the federal agency or agencies that supervise those lessors. The Federal Reserve has found that few state member banks engage in consumer leasing and that while the prevalence of leasing has increased in recent years, it has not increased substantially among state member banks. It also has found that among state member banks that engage in consumer leasing, only a very few advertise consumer leases.

The proposed revisions to §§ 213.4 and 213.5 are estimated to have no effect on the hour burden that the regulation imposes. The proposed revisions to § 213.7, while more substantive, are expected to have no net effect on the hour burden.

The current hour burden for state member banks, as of the September 1996 final rule, is estimated to be eighteen minutes for the disclosures and twenty-five minutes for advertising. It is estimated that there will be 310 respondents and an average frequency of 120 responses per respondent each year. The total amount of annual hour burden at all state member banks is estimated to be 11,179 hours. Start-up cost burden associated with the September 1996 final rule was estimated to be $12,000 per respondent, amounting to a total of $3,720,000 for state member banks. The Federal Reserve estimates that this amount is sufficient to cover any costs of the proposed rule.

The disclosures made by lessors to consumers under Regulation M are mandatory (15 U.S.C. 1667 *et seq.*). Because the Federal Reserve does not collect any information, no issue of confidentiality under the Freedom of Information Act arises. Consumer lease information in advertisements is available to the public. Disclosures of the costs, liabilities, and terms of consumer lease transactions relating to specific leases are not publicly available.

An agency may not conduct or sponsor, and an organization is not required to respond to, this information collection unless it displays a currently valid OMB control number. The OMB control number is 7100–0202.

Comments are invited on: (a) whether the proposed revised collection of information is necessary for the proper performance of the Federal Reserve's functions; including whether the information has practical utility; (b) the accuracy of the Federal Reserve's estimate of the burden of the proposed revised information collection, including the cost of compliance; (c) ways to enhance the quality, utility, and clarity of the information to be

collected; and (d) ways to minimize the burden of information collection on respondents, including through the use of automated collection techniques or other forms of information technology.

List of Subjects in 12 CFR Part 213

Advertising, Federal Reserve System, Reporting and recordkeeping requirements, Truth in Lending.

Certain conventions have been used to highlight the proposed revisions to the regulation. New language is shown inside bold-faced arrows, while language that would be deleted is set off with bold-faced brackets.

For the reasons set forth in the preamble, the Board proposes to amend 12 CFR Part 213 as follows:

PART 213—CONSUMER LEASING (REGULATION M)

1. The authority citation for part 213 continues to read as follows:

Authority: 15 U.S.C. 1604.

2. Section 213.4 would be amended as follows:

a. Paragraph (n) would be revised; and

b. The headings of Paragraphs (o)(1) and (o)(2) would be revised.

The revisions read as follows:

§ 213.4 Content of disclosures.

* * * * *

(n) *Fees and taxes.* The total dollar amount for all official and license fees, registration, title, or taxes required to be paid [to the lessor] in connection with the lease.

(o) *Insurance.* * * *

(1) [*Voluntary insurance.*] fl *Through the lessor.* fi * * *

(2) [*Required insurance.*] fl *Through a third party.* fi * * *

* * * * *

3. Section 213.5 would be amended by revising paragraph (d)(1) to read as follows:

§ 213.5 Renegotiations, extensions, and assumptions.

* * * * *

(d) *Exceptions.* * * *

(1) A reduction in the [lease] fl rent fi charge;

* * * * *

4. Section 213.7 would be amended as follows:

a. Paragraph (b)(1) would be revised;

b. Paragraph (d) would be revised.

The revisions read as follows:

§ 213.7 Advertising.

* * * * *

(b) *Clear and conspicuous standard.* * * *

(1) *Amount due at lease signing.* Except for the statement of a periodic payment, any affirmative or negative reference to a charge that is a part of the total amount due at lease signing under paragraph (d)(2)(ii) of this section [, such as the amount of any capitalized cost reduction (or no capitalized cost reduction is required),] shall not be more prominent than the disclosure of the total amount due at lease signing.

* * * * *

(d) *Advertisement of terms that require additional disclosure*—(1) *Triggering terms.* An advertisement that states any of the following items shall contain the disclosures required by paragraph (d)(2) of this section, except as provided in paragraphs (e) and (f) of this section:

(i) The amount of any payment; fl or fi

[(ii) The number of required payments; or]

[(iii)] fl (ii) fi A statement of any capitalized cost reduction or other payment required prior to or at consummation, or that no payment is required.

(2) *Additional terms.* An advertisement stating any item listed in paragraph (d)(1) of this section shall also state the following items:

(i) That the transaction advertised is a lease;

(ii) The total amount due at lease signing fl or delivery, whichever is later fi , or that no payment is required;

(iii) The number, amounts, fl and fi due dates or periods of scheduled payments[, and total of such payments] under the lease;

[(iv) A statement of whether or not the lessee has the option to purchase the leased property, and where the lessee has the option to purchase at the end of the lease term, the purchase-option price. The method of determining the purchase-option price may be substituted in disclosing the lessee's option to purchase the leased property prior to the end of the lease term;]

[(v)] fl (iv) fi A statement of fl whether or not a security deposit is required fi [the amount, or the method for determining the amount, of the lessee's liability (if any) at the end of the lease term that] ; and

[(vi)] fl (v) fi A statement [of the lessee's liability] fl that an extra charge may be imposed at the end of the lease term where the lessee is liable fi (if any) for the difference between the residual value of the leased property and its realized value at the end of the lease term.

* * * * *

5. Appendix A to part 213 is amended by revising Appendix A–1 and Appendix A–2 to read as follows:

Appendix A to Part 213—Model Forms

* * * * *

BILLING CODE 6210–01–P

Appendix A-1 Model Open-End or Finance Vehicle Lease Disclosures

Federal Consumer Leasing Act Disclosures

Date _____

Lessor(s) _____ **Lessee(s)** _____

Amount Due at Lease Signing (Itemized below)* $ _____	**Monthly Payments** Your first monthly payment of $ _____ is due on _____, followed by _____ payments of $ _____ due on the _____ of each month. The total of your monthly payments is $ _____.	**Other Charges** (not part of your monthly payment) Disposition fee (if you do not purchase the vehicle) $_____ [[Annual tax] _____] _____ _____ Total $_____	**Total of Payments** (The amount you will have paid by the end of the lease) $ _____ You will owe an additional amount if the actual value of the vehicle is less than the residual value.

*** Itemization of Amount Due at Lease Signing**

Amount Due At Lease Signing:

Capitalized cost reduction	$ _____
First monthly payment	_____
Refundable security deposit	_____
Title fees	_____
Registration fees	_____
_____	_____
Total	$ _____

How the Amount Due at Lease Signing will be paid:

Net trade-in allowance	$ _____
Rebates and noncash credits	_____
Amount to be paid in cash	_____
Total	$ _____

Your monthly payment is determined as shown below:

Gross capitalized cost. The agreed upon value of the vehicle ($ _____) and any items you pay over the lease term (such as service contracts, insurance, and any outstanding prior loan or lease balance) ..... $ _____

If you want an itemization of this amount, please check this box. ☐

Capitalized cost reduction. The amount of any net trade-in allowance, rebate, noncash credit, or cash you pay that reduces the gross capitalized cost ..... - _____

Adjusted capitalized cost. The amount used in calculating your base monthly payment ..... = _____

Residual value. The value of the vehicle at the end of the lease used in calculating your base monthly payment ..... - _____

Depreciation and any amortized amounts. The amount charged for the vehicle's decline in value through normal use and for other items paid over the lease term ..... = _____

Rent charge. The amount charged in addition to the depreciation and any amortized amounts ..... + _____

Total of base monthly payments. The depreciation and any amortized amounts plus the rent charge ..... = _____

Lease term. The number of months in your lease ..... ÷ _____

Base monthly payment ..... = _____

Monthly sales/use tax ..... + _____

_____ ..... + _____

Total monthly payment ..... =$ _____

Rent and other charges. The total amount of rent and other charges imposed in connection with your lease $ _____ .

Early Termination. You may have to pay a substantial charge if you end this lease early. The charge may be up to several thousand dollars. The actual charge will depend on when the lease is terminated. The earlier you end the lease, the greater this charge is likely to be.

Excessive Wear and Use. You may be charged for excessive wear based on our standards for normal use [and for mileage in excess of _____ miles per year at the rate of _____ per mile].

Purchase Option at End of Lease Term. [You have an option to purchase the vehicle at the end of the lease term for $ _____ [and a purchase option fee of $ _____].] [You do not have an option to purchase the vehicle at the end of the lease term.]

Other Important Terms. See your lease documents for additional information on early termination, purchase options and maintenance responsibilities, warranties, late and default charges, insurance, and any security interest, if applicable.

[The following provisions are the nonsegregated disclosures required under Regulation M.]

Description of Leased Property				
Year	Make	Model	Body Style	Vehicle ID #

Official Fees and Taxes. The total amount you will pay for official and license fees, registration, title, and taxes over the term of your lease, whether included with your monthly payments or assessed otherwise: $ _____ .

Insurance. The following types and amounts of insurance will be acquired in connection with this lease:

_____ .

_____ We (lessor) will provide the insurance coverage quoted above for a total premium cost of $ _____.

_____ You (lessee) agree to provide insurance coverage in the amount and types indicated above.

End of Term Liability. (a) The residual value ($ _____) of the vehicle is based on a reasonable, good faith estimate of the value of the vehicle at the end of the lease term. If the actual value of the vehicle at that time is greater than the residual value, you will have no further liability under this lease, except for other charges already incurred [and are entitled to a credit or refund of any surplus.] If the actual value of the vehicle is less than the residual value, you will be liable for any difference up to $ _____ (3 times the monthly payment). For any difference in excess of that amount, you will be liable only if:

1. Excessive use or damage [as described in paragraph ____] [representing more than normal wear and use] resulted in an unusually low value at the end of the term.
2. The matter is not otherwise resolved and we win a lawsuit against you seeking a higher payment.
3. You voluntarily agree with us after the end of the lease term to make a higher payment.

Should we bring a lawsuit against you, we must prove that our original estimate of the value of the leased property at the end of the lease term was reasonable and was made in good faith. For example, we might prove that the actual was less than the original estimated value, although the original estimate was reasonable, because of an unanticipated decline in value for that type of vehicle. We must also pay your attorney's fees.

(b) If you disagree with the value we assign to the vehicle, you may obtain, at your own expense, from an independent third party agreeable to both of us, a professional appraisal of the _____ value of the leased vehicle which could be realized at sale. The appraised value shall then be used as the actual value.

Standards for Wear and Use. The following standards are applicable for determining unreasonable or excess wear and use of the leased vehicle:

_____ .

Maintenance.

[You are responsible for the following maintenance and servicing of the leased vehicle:

_____].

[We are responsible for the following maintenance and servicing of the leased vehicle:

_____].

Warranties. The leased vehicle is subject to the following express warranties:

_____ .

Early Termination and Default. (a) You may terminate this lease before the end of the lease term under the following conditions:

_____ .

The charge for such early termination is:

_____ .

(b) We may terminate this lease before the end of the lease term under the following conditions:

_____ .

Upon such termination we shall be entitled to the following charge(s) for:

_____ .

(c) To the extent these charges take into account the value of the vehicle at termination, if you disagree with the value we assign to the vehicle, you may obtain, at your own expense, from an independent third party agreeable to both of us, a professional appraisal of the _____ value of the leased vehicle which could be realized at sale. The appraised value shall then be used as the actual value.

Security Interest. We reserve a security interest of the following type in the property listed below to secure performance of your obligations under this lease:

_____ .

Late Payments. The charge for late payments is: _____ .

Option to Purchase Leased Property Prior to the End of the Lease. [You have an option to purchase the leased vehicle prior to the end of the term. The price will be [$ _____ /[the method of determining the price].] [You do not have an option to purchase the leased vehicle.]

Appendix A-2 Model Closed-End or Net Vehicle Lease Disclosures

Federal Consumer Leasing Act Disclosures

Date _____

Lessor(s) _____ **Lessee(s)** _____

Amount Due at Lease Signing (Itemized below)*	**Monthly Payments**	**Other Charges** (not part of your monthly payment)	**Total of Payments** (The amount you will have paid by the end of the lease)
$ _____	Your first monthly payment of $ _____ is due on _____, followed by _____ payments of $ _____ due on the _____ of each month. The total of your monthly payments is $ _____.	Disposition fee (if you do not purchase the vehicle) $ _____ [[Annual tax] _____] _____ _____ Total $ _____	$ _____

*** Itemization of Amount Due at Lease Signing**

Amount Due At Lease Signing:

Capitalized cost reduction	$ _____
First monthly payment	_____
Refundable security deposit	_____
Title fees	_____
Registration fees	_____
_____	_____
Total	$ _____

How the Amount Due at Lease Signing will be paid:

Net trade-in allowance	$ _____
Rebates and noncash credits	_____
Amount to be paid in cash	_____
Total	$ _____

Your monthly payment is determined as shown below:

Gross capitalized cost. The agreed upon value of the vehicle ($ _____) and any items you pay over the lease term (such as service contracts, insurance, and any outstanding prior loan or lease balance) ..... $ _____

If you want an itemization of this amount, please check this box. ☐

Capitalized cost reduction. The amount of any net trade-in allowance, rebate, noncash credit, or cash you pay that reduces the gross capitalized cost ..... - _____

Adjusted capitalized cost. The amount used in calculating your base monthly payment ..... = _____

Residual value. The value of the vehicle at the end of the lease used in calculating your base monthly payment ..... - _____

Depreciation and any amortized amounts. The amount charged for the vehicle's decline in value through normal use and for other items paid over the lease term ..... = _____

Rent charge. The amount charged in addition to the depreciation and any amortized amounts ..... + _____

Total of base monthly payments. The depreciation and any amortized amounts plus the rent charge ..... = _____

Lease term. The number of months in your lease ..... ÷ _____

Base monthly payment ..... = _____

Monthly sales/use tax ..... + _____

_____ ..... + _____

Total monthly payment ..... =$ _____

Early Termination. You may have to pay a substantial charge if you end this lease early. <u>The charge may be up to several thousand dollars</u>. The actual charge will depend on when the lease is terminated. The earlier you end the lease, the greater this charge is likely to be.

Excessive Wear and Use. You may be charged for excessive wear based on our standards for normal use [and for mileage in excess of _____ miles per year at the rate of _____ per mile].

Purchase Option at End of Lease Term. [You have an option to purchase the vehicle at the end of the lease term for $ _____ [and a purchase option fee of $ _____].] [You do not have an option to purchase the vehicle at the end of the lease term.]

Other Important Terms. See your lease documents for additional information on early termination, purchase options and maintenance responsibilities, warranties, late and default charges, insurance, and any security interest, if applicable.

[The following provisions are the nonsegregated disclosures required under Regulation M.]

Description of Leased Property				
Year	Make	Model	Body Style	Vehicle ID #

Official Fees and Taxes. The total amount you will pay for official and license fees, registration, title, and taxes over the term of your lease, whether included with your monthly payments or assessed otherwise: $ _____ .

Insurance. The following types and amounts of insurance will be acquired in connection with this lease:

_____ .

_____ We (lessor) will provide the insurance coverage quoted above for a total premium cost of $ _____.

_____ You (lessee) agree to provide insurance coverage in the amount and types indicated above.

Standards for Wear and Use. The following standards are applicable for determining unreasonable or excess wear and use of the leased vehicle:

_____

Maintenance.
[You are responsible for the following maintenance and servicing of the leased vehicle:

_____].

[We are responsible for the following maintenance and servicing of the leased vehicle:

_____].

Warranties. The leased vehicle is subject to the following express warranties:

_____ .

Early Termination and Default. (a) You may terminate this lease before the end of the lease term under the following conditions:

_____ .

The charge for such early termination is:

_____ .

(b) We may terminate this lease before the end of the lease term under the following conditions:

_____ .

Upon such termination we shall be entitled to the following charge(s) for:

_____ .

(c) To the extent these charges take into account the value of the vehicle at termination, if you disagree with the value we assign to the vehicle, you may obtain, at your own expense, from an independent third party agreeable to both of us, a professional appraisal of the _____ value of the leased vehicle which could be realized at sale. The appraised value shall then be used as the actual value.

Security Interest. We reserve a security interest of the following type in the property listed below to secure performance of your obligations under this lease:

_____

Late Payments. The charge for late payments is: _____

Option to Purchase Leased Property Prior to the End of the Lease. [You have an option to purchase the leased vehicle prior to the end of the term. The price will be [$ _____ /[the method of determining the price].] [You do not have an option to purchase the leased vehicle.]

BILLING CODE 6210–01–C

* * * * *

By order of the Board of Governors of the Federal Reserve System, December 17, 1996.

William W. Wiles,

Secretary of the Board.

[FR Doc. 96–32496 Filed 12–31–96; 8:45 am]

BILLING CODE 6210–01–P

DEPARTMENT OF TRANSPORTATION

Federal Aviation Administration

14 CFR Part 71

[Airspace Docket No. 96–ASO–41]

Proposed Amendment to Class E Airspace; Fort Stewart, GA

AGENCY: Federal Aviation Administration (FAA), DOT.

ACTION: Notice of proposed rulemaking.

SUMMARY: This notice proposes to amend the Class E airspace area at Fort Stewart, GA. A GPS RWY 32R Standard Instrument Approach Procedure (SIAP) has been developed for Wright AAF. Additional controlled airspace extending upward from 700 feet above the surface (AGL) is needed to accommodate this SIAP and for IFR operations at the airport.

DATES: Comments must be received on or before February 10, 1997.

ADDRESSES: Send comments on the proposal in triplicate to: Federal Aviation Administration, Docket No. 96–ASO–41, Manager, Operations Branch, ASO–530, P.O. Box 20636, Atlanta, Georgia 30320.

The official docket may be examined in the Office of the Assistant Chief Counsel for Southern Region, Room 550, 1701 Columbia Avenue, College Park, Georgia 30337, telephone (404) 305–5586.

FOR FURTHER INFORMATION CONTACT: Benny L. McGlamery, Operations Branch, Air Traffic Division, Federal Aviation Administration, P.O. Box 20636, Atlanta, Georgia 30320; telephone (404) 305–5570.

SUPPLEMENTARY INFORMATION:

Comments Invited

Interested parties are invited to participate in this proposed rulemaking by submitting such written data, views or arguments as they may desire. Comments that provide the factual basis supporting the views and suggestions presented are particularly helpful in developing reasoned regulatory decisions on the proposal. Comments are specifically invited on the overall regulatory, aeronautical, economic, environmental, and energy-related aspects of the proposal. Communications should identify the airspace docket and be submitted in triplicate to the address listed above. Commenters wishing the FAA to acknowledge receipt of their comments on this notice must submit with those comments a self-addressed, stamped postcard on which the following statement is made: ''Comments to Airspace Docket No. 96–ASO–41.'' The postcard will be date/time stamped and returned to the commenter. All communications received before the specified closing date for comments will be considered before taking action on the proposed rule. The proposal contained in this notice may be changed in light of the comments received.All comments submitted will be available for examination in the Office of the Assistant Chief Counsel for Southern Region, Room 550, 1701 Columbia Avenue, College Park, Georgia 30337, both before and after the closing date for comments. A report summarizing each substantive public contact with FAA personnel concerned with this rulemaking will be filed in the docket.

Availability of NPRMs

Any person may obtain a copy of this Notice of Proposed Rulemaking (NPRM) by submitting a request to the Federal Aviation Administration, Manager, Operations Branch, ASO–530, Air Traffic Division, P.O. Box 20636, Atlanta, Georgia 30320. Communications must identify the notice number of this NPRM. Persons interested in being placed on a mailing list for future NPRMs should also request a copy of Advisory Circular No. 11–2A which describes the application procedure.

The Proposal

The FAA is considering an amendment to Part 71 of the Federal Aviation Regulations (14 CFR Part 71) to amend the Class E airspace area at Fort Stewart, GA. A GPS RWY 32R SIAP has been developed for Wright AAF. Additional controlled airspace extending upward from 700 feet above the surface (AGL) is needed to accommodate this SIAP and for IFR operations at the airport. Class E airspace designations for airspace areas extending upward from 700 feet or more above the surface are published in Paragraph 6005 of FAA Order 7400.9D dated September 4, 1996, and effective September 16, 1996, which is incorporated by reference in 14 CFR 71.1. The Class E airspace designation listed in this document would be published subsequently in the Order.

The FAA has determined that this proposed regulation only involves an established body of technical regulations for which frequent and routine amendments are necessary to keep them operationally current. It, therefore, (1) is not a ''significant regulatory action'' under Executive Order 12866; (2) is not a ''significant rule'' under DOT Regulatory Policies and Procedures (44 FR 11034; February 26, 1979); and (3) does not warrant preparation of a regulatory evaluation as the anticipated impact is so minimal. Since this is a routine matter that will only affect air traffic procedures and air navigation, it is certified that this rule, when promulgated, will not have a significant economic impact on a substantial number of small entities under the criteria of the Regulatory Flexibility Act.

List of Subjects in 14 CFR Part 71

Airspace, Incorporation by reference, Navigation (Air).

The Proposed Amendment

In consideration of the foregoing, the Federal Aviation Administration proposes to amend 14 CFR Part 71 as follows:

PART 71—[Amended]

1. The authority citation for 14 CFR Part 71 continues to read as follows:

Authority: 49 U.S.C. 106(g); 40103, 40113, 40120; E.O. 10854, 24 FR 9565, 3 CFR, 1959–1963 Comp., p. 389; 14 CFR 11.69.

§ 71.1 [Amended]

2. The incorporation by reference in 14 CFR 71.1 of Federal Aviation Administration Order 7400.9D, Airspace Designations and Reporting Points, dated September 4, 1996, and effective September 16, 1996, is amended as follows:

Paragraph 6005 Class E airspace areas extending upward from 700 feet above the surface of the earth.

* * * * *

ASO GA E5 Fort Stewart, GA [Revised]

Fort Stewart, Wright AAF, GA (lat. 31°53′21″N, long. 83°49′48″W)

That airspace extending upward from 700 feet above the surface within a 6.6-mile radius of Wright AAF.

* * * * *

Issued in College Park, Georgia, on December 13, 1996.

Benny L. McGlamery,

Acting Manager, Air Traffic Division, Southern Region.

[FR Doc. 96–33378 Filed 12–31–96; 8:45 am]

BILLING CODE 4910–13–M

DEPARTMENT OF THE TREASURY

Internal Revenue Service

26 CFR Part 1

[REG–246018–96]

RIN 1545–AU49

Recomputation of Life Insurance Reserves

AGENCY: Internal Revenue Service (IRS), Treasury.

ACTION: Notice of proposed rulemaking and notice of public hearing.

SUMMARY: This document contains proposed regulations relating to the definition of life insurance reserves. The proposed regulations permit the taxpayer or the IRS to recompute certain reserves if those reserves were initially computed or estimated on other than an actuarial basis. The proposed regulations affect both life insurance companies and property and casualty insurance companies. This document also contains a notice of a public hearing on the proposed regulations.

DATES: Written comments must be received by April 2, 1997. Requests to speak and outlines of oral comments to be discussed at the public hearing scheduled for Thursday, April 17, 1997, at 10 a.m. must be received by Thursday, March 27, 1997.

ADDRESSES: Send submissions to: CC:DOM:CORP:R (REG–246018–96), room 5226, Internal Revenue Service, POB 7604, Ben Franklin Station, Washington, DC 20044. Submissions may be hand delivered between the hours of 8 a.m. and 5 p.m. to: CC:DOM:CORP:R (REG–246018–96), Courier's Desk, Internal Revenue Service, 1111 Constitution Avenue NW, Washington, DC. Alternatively, taxpayers may submit comments electronically via the Internet by selecting the ''Tax Regs'' option on the IRS Home Page, or by submitting comments directly to the IRS Internet site at http://www.irs.ustreas.gov/prod/tax__regs/comments.html. The public hearing will be held in the Commissioner's conference room, room 3313, Internal Revenue Service Building, 1111 Constitution Avenue, N.W. Washington, D.C.

FOR FURTHER INFORMATION CONTACT: Concerning the regulations, Ann Cammack, (202) 622–3970; concerning submissions and the hearing, Evangelista Lee, (202) 622–7190 (not toll-free numbers).

SUPPLEMENTARY INFORMATION:

Background

To qualify as a life insurance reserve for purposes of Part I of subchapter L of the Internal Revenue Code, a reserve must satisfy various requirements, including the requirement in section 816(b)(1)(A) and § 1.801–4(a)(1) that it be ''computed or estimated on the basis of recognized mortality or morbidity tables and assumed rates of interest.'' Qualifying as a life reserve under section 816(b) has various consequences. Life reserves are included in the numerator and denominator of the reserve ratio test of section 816(a), which is used to determine when an insurance company is taxed as a life insurance company under Part I of subchapter L. Increases in life reserves as defined in section 816(b) are taken into account under section 807(c)(1). In addition, life reserves as defined in section 816(b) are considered part of a nonlife company's unearned premiums under section 832(b)(4).

Two circuits have construed former section 801(b)(1)(A), which was recodified as section 816(b)(1)(A) in 1984, to prevent reserves held with respect to life, annuity or noncancellable accident and health policies but not computed or estimated using actuarial tables from qualifying as life reserves. The IRS also has held that life reserves must be computed or estimated using actuarial tables under former section 801(b)(1)(A). *See, e.g.*, Rev. Rul. 69–302 (1969–2 C.B. 186). The Claims Court, in contrast, has concluded that the statute and regulation do not necessarily require the insurance company to compute its life reserves using actuarial tables, when a different method results in reserves that ''reasonably approximate'' actuarial reserves.

Rev. Rul. 69–302 held that not only were life reserves required to be computed or estimated on the basis of recognized mortality or morbidity tables and assumed rates of interest, but that reserves for credit life insurance contracts could not be retroactively recomputed in a manner that would enable them to qualify as life reserves. Neither of the cases cited in Rev. Rul. 69–302, however, addressed the question of whether taxpayers or the Commissioner could recompute reserves based on information that was available at the end of the applicable taxable year. Two subsequent cases came to opposite conclusions on this issue.

The reserve ratio test of section 816(a) was intended to distinguish between life and nonlife insurance companies based on the nature of each company's business, as measured by its reserves. This purpose is not achieved, however, if a company that only issues life insurance, annuity or noncancellable accident and health contracts can elect to be taxed as a nonlife company by failing to use mortality and morbidity tables and assumed rates of interest in computing or estimating its reserves for some of those contracts.

Explanation of Provisions

Proposed § 1.801–4(g)(1) provides that if an insurance company does not compute or estimate its reserves for certain contracts on the basis of mortality or morbidity tables and assumed rates of interest, then the taxpayer or the Commissioner may recompute those reserves on the basis of mortality or morbidity tables and assumed rates of interest. This regulation will apply to reserves for contracts involving, at the time with respect to which the reserves are computed, life, accident or health contingencies, if such reserves were not initially computed in accordance with the requirements of section 816(b)(1)(A).

Proposed § 1.801–4(g)(2) provides that if the taxpayer or the Commissioner recomputes reserves pursuant to § 1.801–4(g)(1), the reserves satisfy the section 816(b)(1)(A) requirement that a life reserve be computed or estimated using actuarial tables and assumed rates of interest. Assuming that these amounts satisfy the other requirements of section 816(b), the recomputed amounts will be considered life insurance reserves under section 816(b), and the recomputed reserves will be included in both the numerator and the denominator of the reserve ratio test under section 816(a). In addition, the reserves for such contracts will be taken into account under section 807(c)(1) and will be used to compute a nonlife company's unearned premiums under section 832(b)(4).

Proposed § 1.801–4(g)(3) provides that for purposes of section 816(b)(4) and § 1.801–3(i), which provide that the mean of the beginning and end of year reserves will be used for purposes of section 816 (a), (b) and (c), the reserves on a life insurance, annuity or noncancellable accident and health contract must be recomputed for both the beginning and the end of the year.

Proposed § 1.801–4(g)(4) requires that no information acquired after the date as of which the beginning of year reserves were initially computed or estimated may be taken into account in recomputing those reserves under paragraph (g)(1). It also requires that no information acquired after the date as of

which the end of year reserves were initially computed or estimated may be taken into account in recomputing those reserves under paragraph (g)(1).

The IRS is considering whether to issue guidance under section 816, including regulations regarding the definition of ''total reserves'' under section 816(c) as well as redesignating and revising the regulations issued under prior law section 801. The IRS invites comments on this matter.

Proposed Effective Date

Proposed § 1.801–4(g) would be effective with respect to returns filed for taxable years beginning after the publication of the final regulations.

Effect on Other Documents

The IRS will modify, clarify, or obsolete publications as necessary to conform with this regulation as of the date of publication in the Federal Register of the final regulations. *See e.g.,* Rev. Rul. 69–302 (1969–2 C.B. 186). The IRS solicits comments as to whether other publications should be modified or obsoleted.

Special Analyses

It has been determined that this notice of proposed rulemaking is not a significant regulatory action as defined in EO 12866. Therefore, a regulatory assessment is not required. It also has been determined that section 553(b) of the Administrative Procedure Act (5 U.S.C. chapter 5) does not apply to these regulations, and because the regulations do not impose a collection of information on small entities, the Regulatory Flexibility Act (5 U.S.C. chapter 6) does not apply. Pursuant to section 7805(f) of the Internal Revenue Code, this notice of proposed rulemaking will be submitted to the Chief Counsel for Advocacy of the Small Business Administration for comment on its impact on small business.

Comments and Public Hearing

Before these proposed regulations are adopted as final regulations, consideration will be given to any written comments (a signed original and 8 copies) that are submitted timely to the IRS. All comments will be available for public inspection and copying.

A public hearing has been scheduled for Thursday, April 17, 1997 in the Commissioner's conference room, room 3313, Internal Revenue Service Building at 10:00 a.m. Because of access restrictions, visitors will not be admitted beyond the Internal Revenue Building lobby more than 15 minutes before the hearing starts.

The rules of 26 CFR 601.601(a)(3) apply to the hearing.

Persons that wish to present oral comments at the hearing must submit written comments by March 27, 1997 and submit an outline of the topics to be discussed and the time to be devoted to each topic (a signed original and 8 copies) by March 27, 1997.

A period of 10 minutes will be allotted to each person for making comments.

An agenda showing the scheduling of the speakers will be prepared after the deadline for receiving outlines has passed. Copies of the agenda will be available free of charge at the hearing.

Drafting Information

The principal author of this regulation is Ann B. Cammack, Office of Assistant Chief Counsel (Financial Institutions and Products). However, other personnel from the IRS and Treasury Department participated in their development.

List of Subjects in 26 CFR Part 1

Income taxes, Reporting and recordkeeping requirements.

Proposed Amendments to the Regulations

Accordingly, 26 CFR part 1 is proposed to be amended as follows:

PART 1—INCOME TAXES

Paragraph 1. The authority citation for part 1 continues to read in part as follows:

Authority: 26 U.S.C. 7805 * * *

Par. 2. Section 1.801–4 is amended by adding a new paragraph (g) to read as follows:

§ 1.801–4 Life insurance reserves.

* * * * *

(g) *Recomputation of life insurance reserves—(1) General.* If an insurance company does not compute or estimate its reserves for contracts involving, at the time with respect to which the reserves are computed, life, accident or health contingencies, on the basis of mortality or morbidity tables and assumed rates of interest, then the taxpayer or the Commissioner may recompute reserves for those contracts on the basis of mortality or morbidity tables and assumed rates of interest.

(2) *Effect of recomputation.* If reserves are recomputed pursuant to paragraph (g)(1) of this section, the recomputed reserves satisfy the requirements of section 816(b)(1)(A).

(3) *Mean reserve.* For purposes of section 816(b)(4) and § 1.801–3(i), if reserves are recomputed pursuant to paragraph (g)(1) of this section for a taxable year, the reserves must be recomputed for both the beginning and the end of the taxable year.

(4) *Subsequently acquired information.* No information acquired after the date as of which a reserve was initially computed or estimated may be taken into account in recomputing that reserve under paragraph (g)(1) of this section.

(5) *Effective date.* This section is applicable with respect to returns filed for taxable years beginning after the date final regulations are filed with the Office of the Federal Register.

Michael P. Dolan,

Acting Commissioner of Internal Revenue.

[FR Doc. 96–32855 Filed 12–31–96; 8:45 am]

BILLING CODE 4830–01–U

---

26 CFR Part 1

[REG–209839–96]

RIN 1545–AU60

Determination of Earned Premiums

AGENCY: Internal Revenue Service (IRS), Treasury.

ACTION: Notice of proposed rulemaking and notice of public hearing.

SUMMARY: This document contains proposed regulations relating to the requirement that insurance companies other than life insurance companies reduce by 20 percent their deductions for increases in unearned premiums. This requirement was enacted as part of the Tax Reform Act of 1986. These regulations are necessary in order to provide guidance to nonlife insurance companies that are subject to the 20 percent reduction rule. This document also contains a notice of a public hearing on the proposed regulations.

DATES: Written comments must be received by April 2, 1997. Requests to speak and outlines of oral comments to be discussed at the public hearing scheduled for April 30, 1997 at 10:00 a.m. must be received by April 2, 1997.

ADDRESSES: Send submissions to: CC:DOM:CORP:R (REG–209839–96), room 5226, Internal Revenue Service, POB 7604, Ben Franklin Station, Washington, DC 20044. Submissions may be hand delivered between the hours of 8 a.m. and 5 p.m. to: CC:DOM:CORP:R (REG–209839–96), Courier's Desk, Internal Revenue Service, 1111 Constitution Avenue NW, Washington, DC. Alternatively, taxpayers may submit comments electronically via the internet by selecting the ''Tax Regs'' option on the IRS Home Page, or by submitting

comments directly to the IRS internet site at http://www.irs.ustreas.gov/prod/tax__regs/comments.html. The public hearing will be held in the Auditorium, Internal Revenue Service Building, 1111 Constitution Avenue NW, Washington, DC.

FOR FURTHER INFORMATION CONTACT: Concerning the regulations, Gary Geisler, (202) 622–3970; concerning submissions and the hearing, Evangelista Lee, (202) 622–7190 (not toll-free numbers).

SUPPLEMENTARY INFORMATION:

Background

A nonlife insurance company's underwriting income equals its premiums earned on insurance contracts during the taxable year less its losses incurred and its expenses incurred. For taxable years beginning on or after January 1, 1993, a company's premiums earned on insurance contracts during the taxable year is an amount equal to the gross premiums written on insurance contracts during the taxable year, less return premiums and premiums paid for reinsurance, plus 80 percent of unearned premiums at the end of the prior taxable year, less 80 percent of unearned premiums at the end of the current taxable year.

The gross premiums written for an insurance or reinsurance contract is the total amount charged by the insurance company for the insurance coverage provided under the contract, including amounts charged covering the company's expenses and overhead. Written premiums are generally recorded for the full term of coverage for the year in which the contract is issued. Upon recording a written premium, the company establishes an unearned premium liability to reflect the portion of the written premium which relates to the unexpired portion of the insurance coverage.

The term ''unearned premium'' historically referred to the portion of the gross premiums written that would have to be returned to the policyholder upon cancellation of the policy and that was in direct proportion to the unexpired term of the policy. *See, e.g., Buckeye Union Casualty Co.* v. *Commissioner,* 448 F.2d 228, 230 (6th Cir. 1971), *aff'g* 54 T.C. 13, 20 n.5 (1970). Cases and rulings expanded this definition to include premiums paid for a future benefit, the cost of which was fixed when the policy was issued. *See, e.g., Massachusetts Protective Ass'n.* v. *United States,* 114 F.2d 304 (1st Cir. 1940); *C.P.A. Co.* v. *Commissioner,* 7 T.C. 912 (1946) (nonlife company), *acq.* 1947–1 C.B. 1; Rev. Rul. 55–705, 1955–2 C.B. 280. *But cf. Bituminous Casualty Corp.* v. *Commissioner,* 57 T.C. 58 (1971), *acq. in result* 1973–2 C.B. 1 (stating in dictum that ''unearned premiums'' had a substantially broader definition than the one developed in the cases and rulings cited above).

Prior to 1987, the increase in unearned premiums during the taxable year was deducted from gross premiums written in the computation of premiums earned. For example, if a company on September 1st issued a one-year fire insurance policy with a premium of $1,200, the company on that date would record a gross written premium of $1,200 and establish a $1,200 unearned premium reserve. On December 31st, the company would have earned one-third of the premium, $400, but would have an $800 unearned premium reserve liability for the remaining eight months of coverage to be provided in periods after the close of the taxable year. The subtraction of the full amount of unearned premiums from the gross written premium ''generally reflect[ed]'' the accounting conventions (often referred to as ''statutory accounting principles'') used to prepare the annual statement for state insurance regulatory purposes. 2 H.R. Conf. Rep. No. 841, 99th Cong., 2d Sess. II–354 (1986), 1986–3 C.B. (Vol. 4) 354; S. Rep. No. 313, 99th Cong., 2d Sess. 495 (1986), 1986–3 C.B. (Vol. 3) 495; H.R. Rep. No. 426, 99th Cong., 1st Sess. 668 (1985), 1986–3 C.B. (Vol. 2) 668.

A nonlife company generally deducts expenses incurred in the taxable year in which the expenses are reported on the company's annual statement. These expenses include premium acquisition expenses attributable to unearned premiums.

In 1986, Congress determined that the combination of deferring unearned premiums and currently deducting premium acquisition expenses attributable to unearned premiums under the accounting conventions used to prepare a nonlife insurance company's annual statement resulted in a mismatch of income and expense. Congress decided to require a better measurement of income for Federal income tax purposes. H.R. Rep. No. 426, 1986–3 C.B. (Vol. 2) at 669; S. Rep. No. 313, 1986–3 C.B. (Vol. 3) at 496. Rather than require a nonlife company to capitalize and amortize premium acquisition expenses, Congress reduced by 20 percent the current deduction for unearned premiums. See section 832(b)(4)(B); 2 H.R. Conf. Rep. No. 841, 1986–3 C.B. (Vol. 4) at 354–55; S. Rep. No. 313, 1986–3 C.B. (Vol. 3) at 495–98; H.R. Rep. No. 426, 1986–3 C.B. (Vol. 2) at 668–70. This reduction in unearned premiums is sometimes referred to as the ''20 percent haircut.'' The acceleration of income as a result of the 20 percent haircut is intended to be roughly equivalent to denying current deductibility for a portion of the premium acquisition expenses.

Congress intended the 20 percent haircut to apply to all amounts (other than life insurance reserves and title insurance reserves) that were considered unearned premiums for Federal income tax purposes as of 1986. The House Report states that ''[a]ll items which are included in unearned premiums under section 832(b) of present law are subject to this reduction in the deduction.'' H.R. Rep. No. 426, 1986–3 C.B. (Vol. 2) at 669. In describing the House bill, the Conference Report reiterates that ''[a]ll items which are included in unearned premiums under section 832(b) of present law are subject to this reduction in the deduction'' and describes the Senate amendment as ''the same as the House bill, except that life insurance reserves which are included in unearned premium reserves under section 832(b)(4) are not subject to this reduction.'' 2 H.R. Conf. Rep. No. 841, 1986–3 C.B. (Vol. 4) at 354–55. The Report's description of the Conference agreement states that the agreement ''follows the Senate amendment'' but ''provides special treatment of title insurance unearned premium reserves.'' Id. See sections 832(b) (7) and (8) for the rules applicable to life insurance and title insurance reserves.

Following the imposition of the 20 percent haircut on unearned premiums, the National Association of Insurance Commissioners (NAIC) revised the statutory accounting principles used to prepare a nonlife insurance company's annual statement. In general, these changes permitted a nonlife company to defer recording written premiums and/or to reduce the amount of unearned premiums reported on the company's annual statement. The affected items included advance premiums, additional premiums on retrospectively rated insurance policies, and the reporting of written premiums for workers' compensation policies and certain other casualty policies where the covered risk varies over the policy term.

Prior to 1989, advance premiums were required to be reported in written premiums and unearned premiums on the annual statement for the year in which the advance premiums were received. However, statutory accounting principles now permit advance premiums to be accumulated in a suspense account and reported as a write-in liability on the annual

statement. A company electing to use this alternative treatment would not report advance premiums in either written premiums or unearned premiums on the annual statement until the effective date of the underlying coverage.

Statutory accounting principles also required a nonlife insurance company to record an estimated liability for payment of return premiums under retrospectively rated insurance policies (retro credits) as part of the unearned premium liability. Estimates of additional premiums due from insureds under these policies (retro debits) historically were not taken into account except as an offset to the company's estimated liability for payment of retro credits. Thus, retro debits were not permitted to be shown as assets on the annual statement, and generally were not included in written premiums prior to the year in which the company billed the policyholder for these additional premiums. Beginning in 1988, however, the NAIC permitted retro debits to be shown in an insurance company's admitted assets, subject to certain limitations. The NAIC currently has under consideration a proposal that would require retro credits to be recorded as a write-in liability on the annual statement, rather than as part of unearned premiums. This proposal would also permit retro credits and retro debits to be taken into account either as adjustments to written premiums or as adjustments to earned premiums for purposes of determining underwriting income on the annual statement.

A nonlife insurance company ordinarily reports the full amount of premiums provided in a casualty insurance policy (including any deferred premium installments) in written premiums and unearned premiums for the year in which the policy is issued. However, for workers' compensation policies and certain other casualty policies where the covered risk varies over the policy term, some but not all state insurance regulators permit written premiums to be recorded based on installment billings to the policyholder. If the insurance company issues these policies throughout the year, and the premiums for the policies are billed monthly, the portion of the total written premiums that would be shown as unearned premiums is substantially smaller than would be the case if the written premiums and unearned premiums were determined based on the entire policy term. The NAIC currently has under consideration proposed guidance that would require the full amount of the premiums provided in all casualty insurance policies to be reported in written premiums and unearned premiums on the effective date of the related coverage.

Section 832(b)(1)(A) provides that a nonlife insurance company's income is computed on the basis of the underwriting and investment exhibit of the annual statement approved by the NAIC. Some companies assert that section 832(b)(1)(A) limits application of the 20 percent haircut to the amount of unearned premiums reported on the annual statement. Under this approach, a company that elects for annual statement purposes to report advance premiums as a write-in liability, to offset unearned premiums by retro debits, or to include deferred premiums on policies covering fluctuating risks in written premiums only when billed to the insured, reduces the amount of unearned premiums subject to the 20 percent haircut.

The existing regulations under § 1.832–4(a)(2) state that ''[t]he underwriting and investment exhibit[,] * * * insofar as it is not inconsistent with the provisions of the Code will be recognized and used as a basis for [computing the net income of a nonlife insurance company].'' However, the regulations recognize that not all items of the exhibit ''reflect * * * income as defined in the Code.'' Where statutory accounting principles permit a company to elect among alternative accounting practices, one or more of which do not clearly reflect income as defined by the Code, the company is required for Federal tax purposes to use a method that clearly reflects income. Section 446(b) and § 1.446–1(a)(2). Furthermore, an accounting practice used on the annual statement, although specifically mandated by statutory accounting principles, is not used for purposes of computing taxable income if that practice is inconsistent with the Code.

Overview of Proposed Regulations

The proposed regulations define gross premiums written, return premiums, and unearned premiums for tax purposes. The proposed regulations also provide rules for determining when gross premiums written, return premiums, and unearned premiums are taken into account for tax purposes. In this manner, the proposed regulations ensure that items such as advance premiums and retrospective premium adjustments are treated consistently for purposes of the 20 percent haircut on unearned premiums.

Explanation of Provisions

The starting point for determining a nonlife insurance company's premiums earned for tax purposes is the ''gross premiums written on insurance contracts during the taxable year.'' Proposed § 1.832–4(a)(4)(i) defines ''gross premiums written on insurance contracts'' as the total amounts charged by the insurance company for insurance coverage under insurance or reinsurance contracts issued or renewed during the taxable year. Thus, ''gross premiums written'' includes collected and uncollected premiums.

Proposed § 1.832–4(a)(4)(ii) addresses the treatment of retro debits, which reflect estimates of additional premiums to be received from the insured or the reinsured based on the insurance company's loss experience during expired coverage periods. Thus, retro debits represent additional gross premiums written rather than offsets to the unearned premium liability for unexpired coverage periods. Treating retro debits as offsets to unearned premiums would reduce the acceleration of income under the 20 percent haircut, and would allow some companies with retro debits exceeding their unearned premiums to report a lesser amount of earned premiums for Federal income tax purposes than for annual statement reporting purposes. This result is contrary to the Congressional intent to accelerate the rate at which premiums are earned for tax purposes in order to correct the mismatching of income and expenses on the annual statement. Accordingly, proposed § 1.832–4(a)(4)(ii) requires retro debits to be included in gross premiums written regardless of the manner in which the retro debits are reported on the underwriting exhibit of the annual statement.

Under section 832(b)(4)(A), an insurance company reduces the amount of gross premiums written on insurance contracts during the taxable year by return premiums and premiums paid for reinsurance. Proposed § 1.832–4(a)(5)(i) defines return premiums as amounts paid or credited to the policyholder in accordance with the terms of an insurance contract, other than policyholder dividends or claims and benefit payments. Thus, return premiums include amounts paid or credited to the policyholder with respect to endorsements and modifications of the terms of coverage of an insurance contract. Return premiums also include amounts returned or credited to the policyholder on cancellation of an insurance contract, including the unearned portion of any deferred or uncollected premiums previously included by the company in gross premiums written and unearned premiums. Finally, return premiums

include amounts contractually required to be returned to the ceding company under a reinsurance contract.

The proposed regulations modify the treatment of retro credits under existing law for purposes of determining earned premiums. Since 1943, § 1.832–4(a)(3)(ii) has provided that the liability for return premiums under a retrospectively rated policy is included in a nonlife company's unearned premiums for tax purposes. Although retro credits were included in unearned premiums in 1986, these amounts are based on an insured's loss experience during expired coverage periods, for which the company has already earned the premium. For this reason, proposed § 1.832–4(a)(5)(ii) provides that a nonlife company's provision for payment of a retro credit generally is included in return premiums that reduce gross premiums written. However, proposed § 1.832–4(a)(6)(iv) gives a company the option to include retro credits in unearned premiums to which the 20 percent haircut applies.

The proposed regulations provide timing rules with respect to when a company reports gross premiums written and unearned premiums for tax purposes. Proposed § 1.832–4(a)(7) requires a company to report gross premiums written with respect to an insurance or reinsurance contract for the earlier of the taxable year which includes the effective date of the contract or the taxable year in which all or a part of the gross premium for the contract is received. Thus, the company must report gross premiums written with respect to an insurance contract for the year in which it collects an advance premium. By requiring advance premiums to be included in gross premiums written and unearned premiums, regardless of the manner in which the advance premiums are recorded on the annual statement, the proposed regulations ensure that the treatment of a nonlife insurance company's advance premiums conforms with the treatment of advance premiums of a life insurance company under section 807(e)(7).

The NAIC is considering proposed guidance that would require the premium for the entire term of a property and casualty insurance contract to be recorded as written premium on the effective date of the contract. The proposed NAIC guidance rejects the previous NAIC position that permitted written premiums for workers' compensation policies and certain other casualty policies where the covered risk varies over the policy term to be recorded when billed. For this reason, the method of reporting gross premiums written for workers' compensation policies and certain other casualty insurance policies covering fluctuating risks is reserved in the proposed regulations.

Proposed Effective Date

The proposed regulations are proposed to apply to the determination of premiums earned for insurance contracts issued or renewed in taxable years beginning after the date on which final regulations are published in the Federal Register.

Special Analyses

It has been determined that this notice of proposed rulemaking is not a significant regulatory action as defined in Executive Order 12866. Therefore, a regulatory assessment is not required. It also has been determined that section 553(b) of the Administrative Procedure Act (5 U.S.C. chapter 5) does not apply to these regulations, and because the regulations do not impose a collection of information on small entitles, the Regulatory Flexibility Act (5 U.S.C. chapter 6) does not apply. Pursuant to section 7805(f) of the Internal Revenue Code, this notice of proposed rulemaking will be submitted to the Chief Counsel for Advocacy of the Small Business Administration for comment on its impact on small business.

Comments and Public Hearing

Before these proposed regulations are adopted as final regulations, consideration will be given to any written comments (a signed original and 8 copies) that are submitted timely to the IRS. All comments will be available for public inspection and copying.

A public hearing has been scheduled for Wednesday, April 30, 1997 in the Auditorium, Internal Revenue Service Building, 1111 Constitution Avenue NW, Washington DC. Because of access restrictions, visitors will not be admitted beyond the Internal Revenue Building lobby more than 15 minutes before the hearing starts.

The rules of 26 CFR 601.601(a)(3) apply to the hearing.

Persons that wish to present oral comments at the hearing must submit written comments by April 2, 1997 and submit an outline of the topics to be discussed and the time to be devoted to each topic (a signed original and 8 copies) by April 2, 1997.

A period of 10 minutes will be allotted to each person for making comments.

An agenda showing the scheduling of the speakers will be prepared after the deadline for receiving outlines has passed. Copies of the agenda will be available free of charge at the hearing.

Drafting Information

The principal author of this regulation is Gary Geisler, Office of Assistant Chief Counsel (Financial Institutions and Products). However, other personnel from the IRS and Treasury Department participated in their development.

List of Subjects in 26 CFR Part 1

Income taxes.

Proposed Amendments to the Regulations

Accordingly, 26 CFR part 1 is proposed to be amended as follows:

PART 1—INCOME TAXES

Paragraph 1. The authority citation for part 1 continues to read in part as follows:

Authority: 26 U.S.C. 7805 * * *

Par. 2. Section 1.832–4 is amended as follows:

1. Paragraph (a)(3) is revised.
2. Paragraphs (a)(4) and (a)(5) are redesignated as (a)(9) and (a)(10).
3. New paragraphs (a)(4) through (a)(8) are added.

The additions and revisions read as follows:

§ 1.832–4 Gross income.

(a) * * *

(3) *Premiums earned.* The determination of premiums earned on insurance contracts during the taxable year begins with the insurance company's gross premiums written on insurance contracts during the taxable year, reduced by return premiums and ceded reinsurance premiums. Subject to the exceptions in sections 832(b)(7), 832(b)(8), and 833(a)(3), this amount is increased by 80 percent of the unearned premiums at the end of the preceding taxable year, and is decreased by 80 percent of the unearned premiums at the end of the taxable year.

(4) *Gross premiums written*—(i) *In general.* An insurance company's ''gross premiums written on insurance contracts during the taxable year'' are the total amounts charged by the insurance company for insurance coverage under insurance or reinsurance contracts issued or renewed by the company during the taxable year.

(ii) *Debits on retrospectively rated insurance policies.* Gross premiums written include an insurance company's estimate of the gross additional premiums to be received from the insured or the reinsured with respect to the expired portion of a retrospectively rated insurance or reinsurance contract

(retro debits). The retro debits are reported for the taxable year in which the amounts can be reasonably estimated based on information used to compute the insurance company's loss reserves. An insurance company adjusts gross premiums written to reflect payments from the insured or the reinsured with respect to retro debits, as well as changes in the estimate of retro debits.

(5) *Return premiums*—(i) *In general.* Return premiums are amounts paid or credited to the policyholder in accordance with the terms of an insurance contract, other than policyholder dividends or claims and benefit payments. For example, return premiums include amounts returned or credited to the policyholder based on modifications of the terms of an insurance contract. Return premiums also include amounts contractually required to be returned to the ceding company pursuant to a reinsurance contract.

(ii) *Credits on retrospectively rated insurance policies.* Except as provided in paragraph (a)(6)(iv) of this section, return premiums include an insurance company's estimate of the gross liability for return premiums to be paid or credited to the insured or the reinsured with respect to the expired portion of a retrospectively rated insurance or reinsurance contract (retro credits). The retro credits are included in return premiums for the taxable year in which the insurance company's liability to pay or credit these amounts can be reasonably estimated based on information used to compute the company's loss reserves. An insurance company adjusts return premiums to reflect payments made or amounts credited to the insured or the reinsured with respect to retro credits, as well as changes in the estimate of retro credits.

(iii) *Unpaid premiums on cancelled policies.* If an insurance contract is cancelled, an insurance company includes in return premiums the unearned portion of any deferred or uncollected premiums previously included in gross premiums written and unearned premiums.

(6) *Unearned premiums*—(i) *In general.* The unearned premium for an insurance or reinsurance contract is the portion of the gross premiums written which is attributable to future insurance coverage to be provided under the contract. An insurance company makes an appropriate adjustment to its unearned premiums for an insurance or reinsurance contract if the contract is reinsured with, or retroceded to, another insurance company.

(ii) *Special rules.* In computing ''premiums earned on insurance contracts during the taxable year,'' the amount of unearned premiums includes—

(A) Life insurance reserves (as defined in section 816(b), but computed in accordance with section 807(d));

(B) In the case of a mutual flood or fire insurance company described in section 832(b)(1)(D) (with respect to contracts described in that section) the amount of unabsorbed premium deposits which the company would be obligated to return to its policyholders at the close of the taxable year if all its policies were terminated at that time;

(C) In the case of an interinsurer or reciprocal underwriter which reports unearned premiums on its annual statement net of premium acquisition expenses, the unearned premiums on the company's annual statement increased by the portion of premium acquisition expenses allocable to those unearned premiums;

(D) In the case of a title insurance company, its discounted unearned premiums (computed in accordance with section 832(b)(8)); and

(E) Amounts treated as unearned premiums pursuant to the optional treatment provided in paragraph (a)(6)(iv) of this section.

(iii) *Method of determining unearned premiums.* If the risk of loss under an insurance or reinsurance contract arises uniformly over the contract period, the unearned premium attributable to the portion of the insurance coverage which has not expired is computed on a pro rata basis. If the risk of loss does not arise uniformly over the contract period, the insurance company may consider the pattern or incidence of the risk in determining the portion of the gross premium written which is attributable to the portion of the insurance coverage which has not yet expired.

(iv) *Option to include retro credits in unearned premiums.* An insurance company may include retro credits in unearned premiums under section 832(b)(4) for its first taxable year beginning after the date on which final regulations are published in the Federal Register. Any company exercising this option must apply it consistently to all retro credits with respect to retrospectively rated insurance or reinsurance contracts issued or renewed during the taxable year and all subsequent years.

(7) *Method of reporting gross premiums written*—(i) *In general.* An insurance company reports gross premiums written with respect to an insurance or reinsurance contract for the earlier of the taxable year which includes the effective date of the contract or the taxable year in which all or a part of the gross premium for the contract is received.

(ii) *Method of reporting gross premiums written on policies covering fluctuating risks.* [Reserved]

(iii) *Examples.* The provisions of this paragraph (a)(7) are illustrated by the following examples:

Example 1. (i) IC is a nonlife insurance company which, pursuant to section 843, files its returns on a calendar year basis. On July 1, 1998, IC issues a fire insurance policy to A, an individual. The policy provides coverage for a one-year term beginning on July 1, 1998 and ending on June 30, 1999. The premium provided in the policy is $500, which may be paid either in full on the policy effective date or in quarterly installments of $125. A selects the installment payment option. As of December 31, 1998, the policy issued to A remains in force, and IC has collected a total of $250 of installment premiums from A. Assume IC has issued no other policies.

(ii) For the taxable year ending December 31, 1998, IC reports the $500 premium provided in A's policy in gross premiums written under section 832(b)(4)(A). IC also claims a reduction under section 832(b)(4)(B) for 80% of the $250 of unearned premiums ($200) associated with the policy at the end of the taxable year.

Example 2. (i) The facts are the same as *Example 1*, except that the term of coverage for the fire insurance policy issued to A begins on January 1, 1999 and ends on December 31, 1999. On December 15, 1998, IC receives $125 from A and agrees to apply this amount as the first premium installment due on the policy.

(ii) Under paragraph (a)(7)(i) of this section, IC reports gross premiums written for the policy issued to A for the taxable year in which the advance premium is received. Thus, for the taxable year ending December 31, 1998, IC includes $500 in its gross premiums written under section 832(b)(4)(A). IC also claims a reduction under section 832(b)(4)(B) for 80% of the $500 of unearned premiums ($400) associated with the policy at the end of the taxable year.

(8) *Effective date.* Paragraphs (a)(3) through (a)(7) of this section are applicable with respect to the determination of premiums earned for insurance contracts issued or renewed during taxable years beginning after the date on which final regulations are published in the Federal Register.

Michael P. Dolan,

Acting Commissioner of Internal Revenue.

[FR Doc. 96–32520 Filed 12–31–96; 8:45 am]

BILLING CODE 4830–01–U

26 CFR Parts 1 and 301

[REG–248770–96]

RIN 1545–AU64

Miscellaneous Sections Affected by the Taxpayer Bill of Rights 2 and the Personal Responsibility and Work Opportunity Reconciliation Act of 1996

AGENCY: Internal Revenue Service (IRS), Treasury.

ACTION: Notice of proposed rulemaking.

SUMMARY: This document contains proposed regulations relating to joint returns, property exempt from levy, interest, penalties, offers in compromise, and the awarding of costs and certain fees. The proposed regulations reflect changes to the law made by the Taxpayer Bill of Rights 2 and a conforming amendment made by the Personal Responsibility and Work Opportunity Reconciliation Act of 1996. The proposed regulations affect taxpayers with respect to filing of returns, interest, penalties, court costs, and payment, deposit, and collection of taxes.

DATES: Written comments and requests for a public hearing must be received by April 2, 1997.

ADDRESSES: Send submissions to: CC:DOM:CORP:R (REG–248770–96), room 5228, Internal Revenue Service, POB 7604, Ben Franklin Station, Washington, DC 20044. In the alternative, submissions may be hand delivered between the hours of 8 a.m. and 5 p.m. to: CC:DOM:CORP:R (REG–248770–96), Courier's Desk, Internal Revenue Service, 1111 Constitution Avenue NW, Washington DC. Finally, taxpayers may submit comments electronically via the INTERNET by selecting the ''Tax Regs'' option on the IRS Home Page, or by submitting comments directly to the IRS Internet site at http://www.irs.ustreas.gov/prod/tax__regs/comments.html.

FOR FURTHER INFORMATION CONTACT: Concerning the regulations, Beverly A. Baughman, (202) 622–4940 regarding joint returns and penalties; Robert A. Miller, (202) 622–3640 regarding levy; Donna J. Welch, (202) 622–4910 regarding interest; Thomas D. Moffitt, (202) 622–7900 regarding court costs; and Kevin B. Connelly, (202) 622–3640 regarding compromises (not toll-free numbers). Concerning submissions, Evangelista Lee, (202) 622–7190 (not a toll-free number).

SUPPLEMENTARY INFORMATION:

Paperwork Reduction Act

The collection of information contained in this notice of proposed rulemaking has been submitted to the Office of Management and Budget for review in accordance with the Paperwork Reduction Act of 1995 (44 U.S.C. 3507(d)). Comments on the collection of information should be sent to the Office of Management and Budget, Attn: Desk Officer for the Department of the Treasury, Office of Information and Regulatory Affairs, Washington, D.C. 20503, with copies to the Internal Revenue Service, Attn: IRS Reports Clearance Officer, T:FP, Washington, D.C. 20224. Comments on the collection of information should be received by March 3, 1997. Comments are specifically requested concerning:

Whether the proposed collection of information is necessary for the proper performance of the functions of the Internal Revenue Service, including whether the information will have practical utility;

The accuracy of the estimated burden associated with the proposed collection of information (see below);

How the quality, utility, and clarity of the information to be collected may be enhanced;

How the burden of complying with the proposed collection of information may be minimized, including through the application of automated collection techniques or other forms of information technology; and

Estimates of capital or start-up costs and costs of operation, maintenance, and purchase of services to provide information.

The collection of information in this proposed regulation is in § 301.7430–2(c)(3)(i)(B). This information is required to obtain an award of reasonable administrative costs. This information will be used to determine if a taxpayer is entitled to an award of reasonable administrative costs. The collection of information is required to obtain the award. The likely respondents are individuals, business or other for-profit institutions, nonprofit institutions, and small businesses or organizations.

Estimated total annual reporting burden: 10 hours.

The estimated annual burden per respondent: 15 minutes.

Estimated number of respondents: 38.

Estimated annual frequency of responses: On occasion.

An agency may not conduct or sponsor, and a person is not required to respond to, a collection of information unless it displays a valid control number assigned by the Office of Management and Budget.

Books or records relating to a collection of information must be retained as long as their contents may become material in the administration of any internal revenue law. Generally, tax returns and tax return information are confidential, as required by 26 U.S.C. 6103.

Background

This document contains proposed amendments to the Income Tax Regulations and the Regulations on Procedure and Administration (26 CFR parts 1 and 301, respectively) relating to joint returns under section 6013, levy under section 6334, interest under section 6601, the failure to file penalty under section 6651, the failure to deposit penalty under section 6656, compromise under section 7122, and awards of costs and certain fees under section 7430. These sections were amended by the Taxpayer Bill of Rights 2 (TBOR2) (Pub. L. 104–168, 110 Stat. 1452 (1996)) and the Personal Responsibility and Work Opportunity Reconciliation Act of 1996 (Pub. L. 104–193, 110 Stat. 2105 (1996)). The changes made by TBOR2 and the Personal Responsibility and Work Opportunity Reconciliation Act of 1996 are reflected in the proposed regulations.

Explanation of Provisions

Interest and Penalties

Section 6601 requires a taxpayer to pay interest on late payments of tax. However, sections 6601(e)(2) and 6601(e)(3) provide an interest-free period if a taxpayer pays the tax due within a certain number of days after the date of the notice and demand for payment. Sections 303(a) and 303(b)(1) of TBOR2 amended sections 6601(e)(2) and 6601(e)(3) to extend this interest-free period. Therefore, § 301.6601–1(f) of the proposed regulations extends the interest-free period from 10 days to 21 calendar days after the date of the notice and demand (10 business days if the amount for which the notice and demand is made equals or exceeds $100,000) with respect to any notice and demand made after December 31, 1996. The proposed regulations also define business day and calendar day for purposes of § 301.6601–1(f).

Section 6651(a)(3) imposes a penalty on any person who fails to pay the amount of tax that is required to be shown on a return but that is not so shown. However, a penalty-free period is provided if a taxpayer pays the tax due within a certain number of days after the date of the notice and demand for payment. Section 303(b)(2) of TBOR2 amended section 6651(a)(3) to extend the penalty-free period. Therefore, proposed § 301.6651–1(a)(3) extends the penalty-free period from 10

days to 21 calendar days after the date of the notice and demand (10 business days if the amount for which the notice and demand is made equals or exceeds $100,000) with respect to any notice and demand made after December 31, 1996. In addition, the proposed regulations amend section 301.6651–1(a)(3) to conform with changes made by section 1502(b) of the Tax Reform Act of 1986 (Pub. L. 99–514, 100 Stat. 2085 (1986)) to repeal the special coordination rule under section 6651(c)(1)(B).

Section 6651(a)(2) imposes a penalty on any person who fails to pay the amount of tax shown on a return by the payment due date (including extensions). Pursuant to section 6020(b), if a taxpayer does not file a tax return, the Secretary can make a substitute return for the taxpayer. Prior to TBOR2, a taxpayer with a substitute return was not subject to a section 6651(a)(2) penalty because the substitute return was not treated as a return for purposes of the penalty. See Rev. Rul. 76–562, 1976–2 C.B. 430. Section 1301 of TBOR2 amended section 6651 to apply the section 6651(a)(2) failure to pay penalty to returns prepared by the Secretary pursuant to section 6020(b). Thus, for returns due (determined without regard to extensions) after July 30, 1996, proposed § 301.6651–1(g) provides that a taxpayer with a substitute return may be subject to a failure to pay penalty under section 6651(a)(2).

Section 6656 imposes a penalty for failure to deposit taxes with a government depository by the prescribed due date. Section 304 of TBOR2 amended section 6656 to provide exceptions to the failure to deposit penalty for first time depositors of employment taxes. Accordingly, § 301.6656–3(a) of the proposed regulations provides that in the case of first time depositors of employment taxes, the Secretary will generally waive the penalty for failure to deposit if (1) the failure to deposit is inadvertent based on all the facts and circumstances, (2) the depositing entity meets certain net worth requirements, (3) the failure to deposit occurs during the first quarter the depositing entity is required to deposit any employment tax, and (4) the return for the employment tax is filed on time.

In addition, proposed § 301.6656–3(b) provides that the Secretary may abate any penalty for failure to make deposits if the first time a depositor is required to make a deposit, the amount required to be deposited is inadvertently sent to the Secretary instead of to the appropriate government depository. Proposed § 301.6656–3 applies to deposits required to be made after July 30, 1996.

Joint Returns

Prior to TBOR2, married individuals making an election under section 6013(b) to file a joint return after filing a separate return for the same taxable year were required to pay the full amount of the tax shown on the joint return at or before the time of filing the joint return. With respect to taxable years beginning after July 30, 1996, section 402 of TBOR2 amended section 6013(b) to permit married individuals who previously filed separate returns to file joint returns for the same taxable year without paying the full amount of tax shown on the joint return. Accordingly, § 1.6013–2(b)(1) of the proposed regulations provides that the full payment requirement applies only to taxable years beginning on or before July 30, 1996.

Levy and Compromise

Section 6334 lists the items of property that are exempt from levy by the IRS. Section 502 of TBOR2 amended section 6334 to (1) increase the dollar amount exempt from levy under section 6334(a)(2) and provide that this exemption amount applies to all taxpayers, not just heads of a family; (2) increase the dollar amount exempt from levy under section 6334(a)(3); and (3) provide a yearly inflation adjustment for the dollar amounts exempt from levy. In addition, section 110(l)(6) of the Personal Responsibility and Work Opportunity Reconciliation Act of 1996, in a conforming amendment, amended section 6334(a)(11)(A) to delete the language ''(relating to aid to families with dependent children)''.

Accordingly, § 301.6334–1(a)(2) of the proposed regulations increases from $1,650 ($1,550 in the case of levies issued during 1989) to $2,500 the amount exempt from levy for fuel, provisions, furniture, and personal effects, and makes this exemption applicable to all taxpayers, not just taxpayers who are heads of a family. The proposed regulations also increase from $1,100 ($1,050 in the case of levies issued during 1989) to $1,250 the amount exempt from levy for books and tools of a trade, business, or profession. These changes are effective with respect to levies issued after December 31, 1996. In addition, for calendar years beginning after 1997, § 301.6334–1(e) of the proposed regulations provides an inflation adjustment for the exemption amounts described above and for rounding to the nearest multiple of $10.

Prior to the enactment of TBOR2, section 7122(b) required the General Counsel of the Treasury or his delegate to file an opinion with the Secretary whenever the Secretary compromised a case, unless the compromise involved a civil case in which the unpaid amount of the tax assessed (including any interest, additional amount, addition to the tax, or assessable penalty) was less than $500. Effective July 30, 1996, section 503 of TBOR2 amended section 7122 to raise the dollar threshold for mandatory review of compromises of civil cases by the General Counsel of the Department of Treasury or his delegate from $500 to $50,000. Accordingly, § 301.7122–1(e) of the proposed regulations provides that for compromises accepted on or after July 30, 1996, no opinion is required if the unpaid amount of tax is less than $50,000.

Awarding of Costs and Certain Fees

In general, under section 7430 a prevailing party may recover the reasonable administrative or litigation costs incurred in an administrative or a civil proceeding if the proceeding relates to the determination, collection, or refund of any tax, interest, or penalty. Prior to TBOR2, the taxpayer had the burden of proving that the position of the United States was not substantially justified. Section 701 of TBOR2 amended section 7430(c)(4) to place on the government the burden of proving that the position of the United States is substantially justified. Under TBOR2, the position of the government will be presumed not to be substantially justified if the IRS did not follow its applicable published guidance. Section 701 defines applicable published guidance.

The proposed regulations reflect these changes. Further, § 301.7430–5(c)(3) of the proposed regulations clarifies that in the definition of applicable published guidance, ''regulations'' means final and temporary regulations. The proposed regulations also clarify the period during which and the issues upon which the position of the United States is presumed to be not substantially justified.

Section 702 of TBOR2 amended section 7430(c)(1) to increase the allowable hourly rate of an award of attorney's fees and provide for a yearly inflation adjustment and rounding. Sections 301.7430–2 and 301.7430–4 of the proposed regulations reflect these changes.

Finally, section 703 of TBOR2 amended section 7430(b)(1) to clarify that any failure to agree to an extension of the statute of limitations will not affect the determination of whether a taxpayer has exhausted administrative

remedies as a prerequisite to recovery of attorney's fees. Although this is consistent with an example in the prior regulations (Example 4, § 301.7430–1(f)), the proposed regulations add § 301.7430–1(b)(4) to reflect the statutory language.

Special Analyses

It has been determined that this notice of proposed rulemaking is not a significant regulatory action as defined in EO 12866. Therefore, a regulatory assessment is not required.

It is hereby certified that the regulations in this document will not have a significant economic impact on a substantial number of small entities. This certification is based on a determination that in the past only an average of 38 taxpayers per year, the majority of whom were individuals, have filed a request to recover administrative costs. Accordingly, a Regulatory Flexibility Analysis under the Regulatory Flexibility Act (5 U.S.C. chapter 6) is not required.

Pursuant to section 7805(f) of the Internal Revenue Code, this notice of proposed rulemaking will be submitted to the Chief Counsel for Advocacy of the Small Business Administration for comment on its impact on small business.

Comments and Requests for a Public Hearing

Before these proposed regulations are adopted as final regulations, consideration will be given to any written comments (a signed original and eight (8) copies) or electronic comments that are submitted timely to the IRS. All comments will be available for public inspection and copying. A public hearing may be scheduled if requested in writing by any person that timely submits written comments. If a public hearing is scheduled, notice of the date, time, and place for the hearing will be published in the Federal Register.

Drafting Information

The principal authors of these regulations are Beverly A. Baughman and Donna J. Welch, Office of Assistant Chief Counsel (Income Tax and Accounting), Robert A. Miller and Kevin B. Connelly, Office of Assistant Chief Counsel (General Litigation), and Thomas D. Moffitt, Office of Assistant Chief Counsel (Field Service). However, other personnel from the IRS and Treasury Department participated in their development.

List of Subjects

26 CFR Part 1

Income taxes, Reporting and recordkeeping requirements.

26 CFR Part 301

Employment taxes, Estate taxes, Excise taxes, Gift taxes, Income taxes, Penalties, Reporting and recordkeeping requirements.

Proposed Amendments to the Regulations

Accordingly, 26 CFR parts 1 and 301 are proposed to be amended as follows:

PART 1—INCOME TAXES

Paragraph 1. The authority citation for part 1 continues to read in part as follows:

Authority: 26 U.S.C. 7805 * * *

§ 1.6013–2 [Amended]

Par. 2. Section 1.6013–2(b)(1) is amended by removing the language ''Unless'' and adding ''Beginning on or before July 30, 1996, unless'' in its place.

PART 301—PROCEDURE AND ADMINISTRATION

Par. 3. The authority citation for part 301 continues to read in part as follows:

Authority: 26 U.S.C. 7805 * * *

Par. 4. Section 301.6334–1 is amended by:

1. Revising paragraph (a)(2).
2. Removing the language ''$1,100 ($1,050 for levies issued prior to January 1, 1990)'' from paragraph (a)(3) and adding ''$1,250'' in its place.
3. Removing the language ''(relating to aid to families with dependent children)'' from paragraph (a)(11)(i).
4. Redesignating paragraph (e) as paragraph (f) and adding a new paragraph (e).
5. Revising newly designated paragraph (f).

The additions and revisions read as follows:

§ 301.6334–1 Property exempt from levy.

(a) * * *

(2) *Fuel, provisions, furniture, and personal effects.* So much of the fuel, provisions, furniture, and personal effects in the taxpayer's household, and of the arms for personal use, livestock, and poultry of the taxpayer, that does not exceed $2,500 in value.

* * * * *

(e) *Inflation adjustment.* For any calendar year beginning after December 31, 1997, each dollar amount referred to in paragraphs (a)(2) and (a)(3) of this section will be increased by an amount equal to the dollar amount multiplied by the cost-of-living adjustment determined under section 1(f)(3) for the calendar year (substituting ''calendar year 1996'' for ''calendar year 1992'' in section 1(f)(3)(B)). If any dollar amount as adjusted is not a multiple of $10, the dollar amount will be rounded to the nearest multiple of $10 (rounding up if the amount is a multiple of $5).

(f) *Effective date.* Generally, these provisions are applicable with respect to levies made on or after July 1, 1989. However, any reasonable attempt by a taxpayer to comply with the statutory amendments addressed by the regulations in this section prior to February 21, 1995, will be considered as meeting the requirements of the regulations in this section. In addition, paragraphs (a)(2), (a)(3), (a)(11)(i) and (e) of this section are applicable with respect to levies issued after December 31, 1996.

Par. 5. Section 301.6601–1 is amended by:

1. Revising paragraphs (f)(3) and (f)(4).
2. Redesignating paragraph (f)(5) as paragraph (f)(6) and adding new paragraph (f)(5).

The additions and revisions read as follows:

§ 301.6601–1 Interest on underpayments.

* * * * *

(f) * * *

(3) Interest will not be imposed on any assessable penalty, addition to the tax, or additional amount if the amount is paid within 21 calendar days (10 business days if the amount stated in the notice and demand equals or exceeds $100,000) from the date of the notice and demand. If interest is imposed, it will be imposed only for the period from the date of the notice and demand to the date on which payment is received. This paragraph (f)(3) is applicable with respect to any notice and demand made after December 31, 1996.

(4) If notice and demand is made after December 31, 1996, for any amount and the amount is paid within 21 calendar days (10 business days if the amount equals or exceeds $100,000) from the date of the notice and demand, interest will not be imposed for the period after the date of the notice and demand.

(5) For purposes of paragraphs (f)(3) and (f)(4) of this section—

(i) The term *business day* means any day other than a Saturday, Sunday, legal holiday in the District of Columbia, or a statewide legal holiday in the state where the taxpayer resides or where the taxpayer's principal place of business is located. With respect to the tenth

business day (after taking into account the first sentence of this paragraph (f)(5)(i)), see section 7503 relating to time for performance of acts where the last day falls on a statewide legal holiday in the state where the act is required to be performed.

(ii) The term *calendar day* means any day. With respect to the twenty-first calendar day, see section 7503 relating to time for performance of acts where the last day falls on a Saturday, Sunday, or legal holiday.

* * * * *

Par. 6. Section 301.6651–1 is amended by:

1. Revising paragraph (a)(3).
2. Adding paragraph (g).

The additions and revisions read as follows:

§ 301.6651–1 Failure to file tax return or to pay tax.

(a) * * *

(3) *Failure to pay tax not shown on return.* In the case of failure to pay any amount of any tax required to be shown on a return specified in paragraph (a)(1) of this section that is not so shown (including an assessment made pursuant to section 6213(b)) within 21 calendar days from the date of the notice and demand (10 business days if the amount for which the notice and demand is made equals or exceeds $100,000) with respect to any notice and demand made after December 31, 1996, there will be added to the amount stated in the notice and demand the amount specified below unless the failure to pay the tax within the prescribed time is shown to the satisfaction of the district director or the director of the service center to be due to reasonable cause and not to willful neglect. The amount added to the tax is 0.5 percent of the amount stated in the notice and demand if the failure is for not more than 1 month, with an additional 0.5 percent for each additional month or fraction thereof during which the failure continues, but not to exceed 25 percent in the aggregate.

* * * * *

(g) *Treatment of returns prepared by the Secretary*—(1) *In general.* A return prepared by the Secretary under section 6020(b) will be disregarded for purposes of determining the amount of the addition to tax for failure to file any return pursuant to paragraph (a)(1) of this section. However, the return prepared by the Secretary will be treated as a return filed by the taxpayer for purposes of determining the amount of the addition to tax for failure to pay the tax shown on any return and for failure to pay the tax required to be shown on a return that is not so shown pursuant to paragraphs (a)(2) and (a)(3) of this section, respectively.

(2) *Effective date.* This paragraph (g) applies to returns the due date for which (determined without regard to extensions) is after July 30, 1996.

Par. 7. Section 301.6656–3 is added to read as follows:

§ 301.6656–3 Abatement of penalty.

(a) *Exception for first time depositors of employment taxes*—(1) *Waiver.* The Secretary will generally waive the penalty imposed by section 6656(a) on a person's failure to deposit any employment tax under subtitle C of the Internal Revenue Code if—

(i) The failure is inadvertent;

(ii) The person meets the requirements referred to in section 7430(c)(4)(A)(ii) (relating to the net worth requirements applicable for awards of attorney's fees);

(iii) The failure occurs during the first quarter that the person is required to deposit any employment tax; and

(iv) The return of the tax is filed on or before the due date.

(2) *Inadvertent failure.* For purposes of paragraph (a)(1)(i) of this section, the Secretary will determine if a failure to deposit is inadvertent based on all the facts and circumstances.

(b) *Deposit sent to Secretary.* The Secretary may abate the penalty imposed by section 6656(a) if the first time a depositor is required to make a deposit, the amount required to be deposited is inadvertently sent to the Secretary instead of to the appropriate government depository.

(c) *Effective date.* This section applies to deposits required to be made after July 30, 1996.

Par. 8. Paragraph (e) of § 301.7122–1 is revised to read as follows:

§ 301.7122–1 Compromises.

* * * * *

(e) *Record*—(1) *In general.* If an offer in compromise is accepted, there will be placed on file the opinion of the Chief Counsel of the IRS with respect to the compromise, with the reasons for the opinion, and including a statement of—

(i) The amount of tax assessed;

(ii) The amount of interest, additional amount, addition to the tax, or assessable penalty, imposed by law on the person against whom the tax is assessed; and

(iii) The amount actually paid in accordance with the terms of the compromise.

(2) *Exception.* For compromises accepted on or after July 30, 1996, no opinion will be required with respect to the compromise of any civil case in which the unpaid amount of tax assessed (including any interest, additional amount, addition to the tax, or assessable penalty) is less than $50,000. However, the compromise will be subject to continuing quality review by the Secretary.

* * * * *

§ 301.7430–0 [Amended]

Par 9. Section 301.7430–0 is amended by:

1. Adding under the heading § 301.7430–1, a caption (b)(4) to read ''(4) Failure to agree to extension of time for assessments.''.
2. Adding under the heading § 301.7430–5, a caption (c)(3) to read ''(3) Presumption.''.

Par. 10. Section 301.7430–1 is amended by adding paragraph (b)(4) to read as follows:

§ 301.7430–1 Exhaustion of administrative remedies.

* * * * *

(b) * * *

(4) *Failure to agree to extension of time for assessments.* Any failure by the prevailing party to agree to an extension of the time for the assessment of any tax will not be taken into account for purposes of determining whether the prevailing party has exhausted the administrative remedies available to the party within the IRS.

* * * * *

Par. 11. Section 301.7430–2 is amended by:

1. Removing the language ''7430(c)(4)(B)(ii)'' from the third sentence of paragraph (b)(2) and adding ''7430(c)(4)(C)(ii)'' in its place.
2. Revising paragraph (c)(3)(i)(B).
3. Removing the language ''If more than $75'' from paragraph (c)(3)(ii)(C) and adding ''In the case of administrative proceedings commenced after July 30, 1996, if more than $110'' in its place.

The revision reads as follows:

§ 301.7430–2 Requirements and procedures for recovery of reasonable administrative costs.

* * * * *

(c) * * *

(3) * * *

(i) * * *

(B) A clear and concise statement of the reasons why the taxpayer alleges that the position of the IRS in the administrative proceeding was not substantially justified. For administrative proceedings commenced after July 30, 1996, if the taxpayer alleges that the IRS did not follow any applicable published guidance, the statement must identify all applicable published guidance that the taxpayer

alleges that the IRS did not follow. For purposes of this paragraph (c)(3)(i)(B), the term *applicable published guidance* means final or temporary regulations, revenue rulings, revenue procedures, information releases, notices, announcements, and, if issued to the taxpayer, private letter rulings, technical advice memoranda, and determination letters. Also, for purposes of this paragraph (c)(3)(i)(B), the term *administrative proceeding* includes only those administrative proceedings or portions of administrative proceedings occurring on or after the administrative proceeding date as defined in § 301.7430–3(c).

* * * * *

Par. 12. Section 301.7430–4 is amended by:

1. Removing the language ''$75'' from paragraph (b)(3)(i) and adding '', in the case of proceedings commenced after July 30, 1996, $110'' in its place.
2. Revising paragraph (b)(3)(ii).
3. Removing the language ''$75'' from the first, second, and third sentences of paragraph (b)(3)(iii)(B) and adding ''$110'' in its place.
4. Removing the language ''$75'' from paragraph (b)(3)(iii)(C) and adding ''$110'' in its place.
5. Removing the language ''$75'' from the third sentence of the example in paragraph (b)(3)(iii)(D) and adding ''$110'' in its place.
6. Removing the language ''$75'' from the second and third sentences of paragraph (c)(2)(ii) and adding ''$110'' in its place.

The revision reads as follows:

§ 301.7430–4 Reasonable administrative costs.

* * * * *

(b) * * *

(3) * * *

(ii) *Cost of living adjustment.* The IRS will make a cost of living adjustment to the $110 per hour limitation for fees incurred in any calendar year beginning after December 31, 1996. The cost of living adjustment will be an amount equal to $110 multiplied by the cost-of-living adjustment determined under section 1(f)(3) for the calendar year (substituting ''calendar year 1995'' for ''calendar year 1992'' in section 1(f)(3)(B)). If the dollar limitation as adjusted by this cost-of-living increase is not a multiple of $10, the dollar amount will be rounded to the nearest multiple of $10 (rounding up if the amount is a multiple of $5).

* * * * *

Par. 13. Section 301.7430–5 is amended by:

1. Revising paragraph (a).
2. Adding paragraph (c)(3).

The addition and revision read as follows:

§ 301.7430–5 Prevailing party.

(a) *In general.* For purposes of an award of reasonable administrative costs under section 7430 in the case of administrative proceedings commenced after July 30, 1996, a taxpayer is a prevailing party only if—

(1) The position of the IRS was not substantially justified;

(2) The taxpayer substantially prevails as to the amount in controversy or with respect to the most significant issue or set of issues presented; and

(3) The taxpayer satisfies the net worth and size limitations referenced in paragraph (f) of this section.

* * * * *

(c) * * *

(3) *Presumption.* If the IRS did not follow any applicable published guidance in an administrative proceeding commenced after July 30, 1996, the position of the IRS, on those issues to which the guidance applies and for all periods during which the guidance was not followed, will be presumed not to be substantially justified. This presumption may be rebutted. For purposes of this paragraph (c)(3), the term *applicable published guidance* means final or temporary regulations, revenue rulings, revenue procedures, information releases, notices, announcements, and, if issued to the taxpayer, private letter rulings, technical advice memoranda, and determination letters. Also, for purposes of this paragraph (c)(3), the term *administrative proceeding* includes only those administrative proceedings or portions of administrative proceedings occurring on or after the administrative proceeding date as defined in § 301.7430–3(c).

* * * * *

Par. 14. Section 301.7430–6 is revised to read as follows:

§ 301.7430–6 Effective date.

Sections 301.7430–2 through 301.7430–6, other than §§ 301.7430–2 (b)(2), (c)(3)(i)(B), (c)(3)(ii)(C), and (c)(5); §§ 301.7430–4 (b)(3)(i), (b)(3)(ii), (b)(3)(iii)(B), (b)(3)(iii)(C), (b)(3)(iii)(D), and (c)(2)(ii); and §§ 301.7430–5 (a) and (c)(3), apply to claims for reasonable administrative costs filed with the IRS after December 23, 1992, with respect to costs incurred in administrative proceedings commenced after November 10, 1988. Section 301.7430–2(c)(5) is applicable March 23, 1993. Section 301.7430–0, §§ 301.7430–2 (b)(2), (c)(3)(i)(B), and (c)(3)(ii)(C); §§ 301.7430–4 (b)(3)(i), (b)(3)(ii), (b)(3)(iii)(B), (b)(3)(iii)(C), (b)(3)(iii)(D), and (c)(2)(ii); and §§ 301.7430–5 (a) and (c)(3) are applicable for administrative proceedings commenced after July 30, 1996.

Margaret Milner Richardson,

Commissioner of Internal Revenue.

[FR Doc. 96–32380 Filed 12–31–96; 8:45 am]

BILLING CODE 4830–01–U

---

26 CFR Parts 1 and 602

[REG–209494–90]

RIN 1545–A051

Credit for Increasing Research Activities

AGENCY: Internal Revenue Service (IRS), Treasury.

ACTION: Notice of proposed rulemaking and notice of public hearing.

SUMMARY: This document contains proposed regulations under section 41 of the Internal Revenue Code of 1986 describing when computer software which is developed by (or for the benefit of) a taxpayer primarily for the taxpayer's internal use can qualify for the credit for increasing research activities. The proposed regulations reflect a change to section 41 made by the Tax Reform Act of 1986. This document also provides notice of a public hearing on these proposed regulations.

DATES: Comments and outlines of topics to be discussed at the public hearing scheduled for May 13, 1997 must be received by April 22, 1997.

ADDRESSES: Send submissions to: CC:DOM:CORP:R (REG–209494–90), room 5228, Internal Revenue Service, POB 7604, Ben Franklin Station, Washington, DC 20044. Submissions may be hand delivered between the hours of 8 a.m. and 5 p.m. to: CC:DOM:CORP:R (REG–209494–90), Courier's Desk, Internal Revenue Service, 1111 Constitution Avenue NW., Washington, DC. Alternatively, taxpayers may submit comments electronically via the Internet by selecting the ''Tax Regs'' option of the IRS Home Page, or by submitting comments directly to the IRS Internet site at: http://www.irs.ustreas.gov/prod/tax_regs/comments.html. The public hearing will be held in the auditorium, Internal Revenue Building, 1111 Constitution Avenue, NW., Washington, DC.

FOR FURTHER INFORMATION CONTACT: Concerning the regulations, Lisa J. Shuman or Robert B. Hanson, 202–622–3120; concerning submissions and the hearing, Christina Vasquez, 202–622–7180 (not toll-free numbers).

SUPPLEMENTARY INFORMATION:

Background

Section 41 of the Internal Revenue Code provides a credit against tax for increasing research activities. Eligibility for the credit is determined in part on the definition of *qualified research* under section 41(d)(1). Section 231 of the Tax Reform Act of 1986 (the 1986 Act), 1986–3 C.B. 1, 87, established a new definition of *qualified research* for purposes of the research credit. Qualified research was narrowed to require that research be undertaken for the purpose of discovering information that is technological in nature and the application of which is intended to be useful in developing a new or improved business component of the taxpayer. In addition, research is eligible for the credit only if substantially all of the activities of the research constitute elements of a process of experimentation for a new or improved function, performance, or reliability or quality. Treasury and the IRS request comments on the appropriate explanation of the terms used in the definition of qualified research under the 1986 Act, in particular, the term *process of experimentation*.

Section 231 of the 1986 Act also specified that expenditures incurred in certain research, research-related, and non-research activities are to be excluded from eligibility for the credit without reference to the general requirements for credit eligibility. Under section 41(d)(4)(E) of the Code, except to the extent provided in regulations, qualified research does not include research with respect to computer software developed by (or for the benefit of) the taxpayer primarily for the taxpayer's own use (internal-use software), other than for use in (1) an activity which constitutes qualified research, or (2) a production process whose development meets the requirements in section 41(d)(1) for qualified research (as where the taxpayer is developing robotics and software for the robotics for use in operating a manufacturing process, and the taxpayer's research costs of developing the robotics are eligible for the credit).

The legislative history indicates that Congress intended to limit the credit for the costs of developing internal-use software to software meeting a high threshold of innovation. In particular, Congress intended that regulations would permit internal-use software to qualify for the credit only if, in addition to satisfying the general requirements for credit eligibility, the taxpayer can establish that the following three-part test is satisfied: the software is innovative (as where the software results in a reduction in cost, or improvement in speed, that is substantial and economically significant); the software development involves significant risk (as where the taxpayer commits substantial resources to the development of the software and there is substantial uncertainty, because of technical risk, that such resources would not be recovered in a reasonable period of time); and the software is not commercially available for use by the taxpayer (as where the software cannot be purchased, leased, or licensed and used for the intended purpose without modifications that would satisfy the first two requirements). See H.R. Rep. No. 841, 99th Cong., 2d Sess. II–73. Thus, Congress did not intend that the three-part test in the legislative history would apply in lieu of the general requirements for credit eligibility but, rather, intended that the general requirements for credit eligibility of section 41(d) also would have to be satisfied. See H.R. Rep. No. 841 at II–73.

The legislative history indicates, however, that Congress did not intend the internal-use software exclusion in section 41(d)(4)(E) to apply to research related to the development of a new or improved package of software and hardware developed as a single product of which the software is an integral part, and that is used directly by the taxpayer in providing technological services to customers in its trade or business (as where a taxpayer develops together a new or improved high technology medical or industrial instrument containing software that processes and displays data received by the instrument, or where a telecommunications company develops a package of new or improved switching equipment plus software to operate the switches). See H.R. Rep. No. 841 at II–74.

Congress intended that regulations incorporating the three-part test in the legislative history as an exception to the exclusion from the definition of qualified research under section 41(d)(4)(E) would be effective on the same date section 41(d)(4)(E) became effective. In Notice 87–12 (1987–1 C.B. 432), the IRS stated that regulations to be issued under section 41(d)(4)(E) would be effective for taxable years beginning after December 31, 1985.

Explanation of Provisions

The proposed regulations follow the legislative history and provide that internal-use software that meets the general requirements of section 41(d), is innovative, involves significant economic risk, and is not commercially available for use by the taxpayer is not excluded from eligibility for the research credit under section 41(d)(4)(E). Under the proposed regulations, this is a facts and circumstances test. Treasury and the IRS request comments on facts and circumstances, other than those factors enumerated in the legislative history, to be considered in determining whether internal-use software satisfies the three-part test.

Proposed Effective Dates

The amendments are proposed to be effective for taxable years beginning after December 31, 1985.

Special Analyses

It has been determined that this notice of proposed rulemaking is not a significant regulatory action as defined in EO 12866. Therefore, a regulatory assessment is not required. It also has been determined that section 553(b) of the Administrative Procedure Act (5 U.S.C. chapter 5) does not apply to these regulations, and because these regulations do not impose a collection of information on small entities, the Regulatory Flexibility Act (5 U.S.C. chapter 6) does not apply. Therefore, a Regulatory Flexibility Analysis is not required. Pursuant to section 7805(f) of the Internal Revenue Code, this notice of proposed rulemaking will be submitted to the Chief Counsel for Advocacy of the Small Business Administration for comment on its impact on small business.

Comments and Public Hearing

Before these proposed regulations are adopted as final regulations, consideration will be given to any comments that are submitted timely (in the manner described in the **ADDRESSES** portion of this preamble) to the IRS. All comments will be available for public inspection and copying.

A public hearing has been scheduled for May 13, 1997, at 10 a.m. in the auditorium, Internal Revenue Building, 1111 Constitution Avenue, NW., Washington, DC. Because of access restrictions, visitors will not be admitted beyond the building lobby more than 15 minutes before the hearing starts.

The rules of 26 CFR 601.601(a)(3) apply to the hearing.

Persons that wish to present oral comments at the hearing must submit (in the manner described in the **ADDRESSES** portion of this preamble) comments and an outline of the topics to be discussed and the time to be devoted to each topic by April 22, 1997.

A period of 10 minutes will be allotted to each person for making comments.

An agenda showing the scheduling of the speakers will be prepared after the deadline for receiving outlines has passed. Copies of the agenda will be available free of charge at the hearing.

List of Subjects

26 CFR Part 1

Income taxes, Reporting and recordkeeping requirements.

26 CFR Part 602

Reporting and recordkeeping requirements.

Proposed Amendments to the Regulations

Accordingly, 26 CFR parts 1 and 602 are proposed to be amended as follows:

PART 1—INCOME TAXES

Paragraph 1. The authority citation for part 1 is amended by adding an entry in numerical order to read as follows:

Authority: 26 U.S.C. 7805. * * *

Section 1.41–4 also issued under 26 U.S.C. 41(d)(4)(E). * * *

Par. 2. Section 1.41–0 is amended by revising the entry for § 1.41–4 to read as follows:

§ 1.41–0 Table of contents.

* * * * *

§ 1.41–4 Qualified research for taxable years beginning after December 31, 1985.

(a) through (d) [Reserved].
(e) Internal-use computer software.
(1) General rule.
(2) Requirements.
(3) Computer software and hardware developed as a single product.
(4) Primarily for internal use.
(5) Special rule.
(6) Application of special rule.
(7) Effective date.

* * * * *

Par. 3. Section 1.41–4 is revised to read as follows:

§ 1.41–4 Qualified research for taxable years beginning after December 31, 1985.

(a) through (d) [Reserved].

(e) *Internal-use computer software*—(1) *General rule.* Research with respect to computer software that is developed by (or for the benefit of) the taxpayer primarily for the taxpayer's internal use is eligible for the research credit only if the software satisfies the requirements of paragraph (e)(2) of this section. Generally, research with respect to computer software is not eligible for the research credit where software is used internally, for example, in general and administrative functions (such as payroll, bookkeeping, or personnel management) or in providing noncomputer services (such as accounting, consulting, or banking services).

(2) *Requirements.* The requirements of this paragraph (e)(2) are—

(i) The software satisfies the requirements of section 41(d)(1);

(ii) The software is not otherwise excluded under section 41(d)(4) (other than section 41(d)(4)(E)); and

(iii) One of the following conditions is met—

(A) The taxpayer uses the software in an activity that constitutes qualified research (other than the development of the internal-use software itself);

(B) The taxpayer uses the software in a production process that meets the requirements of section 41(d)(1); or

(C) The software satisfies the special rule of paragraph (e)(5) of this section.

(3) *Computer software and hardware developed as a single product.* This paragraph (e) does not apply to the development costs of a new or improved package of computer software and hardware developed together by the taxpayer as a single product, of which the software is an integral part, that is used directly by the taxpayer in providing technological services in its trade or business to customers. In these cases, eligibility for the research credit is to be determined by examining the combined hardware-software product as a single product.

(4) *Primarily for internal use.* All relevant facts and circumstances are to be considered in determining if computer software is developed primarily for the taxpayer's internal use. If computer software is developed primarily for the taxpayer's internal use, the requirements of this paragraph (e) apply even though the taxpayer intends to, or subsequently does, sell, lease, or license the computer software.

(5) *Special rule.* Computer software satisfies the special rule of this paragraph (e)(5) only if the taxpayer can establish that—

(i) The software is innovative (as where the software results in a reduction in cost, or improvement in speed, that is substantial and economically significant);

(ii) The software development involves significant economic risk (as where the taxpayer commits substantial resources to the development and there is a substantial uncertainty, because of technical risk, that such resources would be recovered within a reasonable period); and

(iii) The software is not commercially available for use by the taxpayer (as where the software cannot be purchased, leased, or licensed and used for the intended purpose without modifications that would satisfy the requirements of paragraphs (e)(5) (i) and (ii) of this section).

(6) *Application of special rule.* In determining if the special rule of paragraph (e)(5) of this section is satisfied all of the facts and circumstances are considered. The special rule allows the costs of developing internal-use software to be eligible for the research credit only if the software meets a high threshold of innovation. The facts and circumstances analysis takes into account only the results attributable to the development of the new or improved software independent of the effect of any modifications to related hardware or other software. The weight given to any fact or circumstance will depend on the particular case.

(7) *Effective date.* This paragraph (e) is applicable for taxable years beginning after December 31, 1985.

§§ 1.41–0A through 1.41–8A [Removed]

Par. 4. Sections 1.41–0A through 1.41–8A and the undesignated centerheading preceding these sections are removed.

PART 602—OMB CONTROL NUMBERS UNDER THE PAPERWORK REDUCTION ACT

Par. 5. The authority citation for part 602 continues to read as follows:

Authority: 26 U.S.C. 7805.

Par. 6. In § 602.101, paragraph (c) is amended by removing the following entries from the table:

§ 602.101 OMB Control numbers.

* * * * *

(c) * * *

CFR part or section where identified and described	Current OMB control No.
* * * * *	
1.41–4A	1545–0074
1.41–4 (b) and (c)	1545–0074
* * * * *	

Margaret Milner Richardson,

Commissioner of Internal Revenue.

[FR Doc. 96–32671 Filed 12–31–96; 8:45 am]

BILLING CODE 4830–01–U

26 CFR Part 53

[REG–247862–96]

RIN 1545–AU66

Requirement of Return and Time for Filing

AGENCY: Internal Revenue Service (IRS), Treasury.

ACTION: Notice of proposed rulemaking by cross-reference to temporary regulations.

SUMMARY: In the Rules and Regulations section of this issue of the Federal Register, the IRS is issuing regulations that provide that disqualified persons and organization managers liable for section 4958 excise taxes are required to file Form 4720. The regulations also specify the filing date for returns for the period to which the new excise taxes apply retroactively. The text of those temporary regulations also serves as the text of these proposed regulations.

DATES: Written comments must be received by April 2, 1997.

ADDRESSES: Send submissions to: CC:DOM:CORP:R (REG–247862–96), room 5226, Internal Revenue Service, POB 7604 Ben Franklin Station, Washington, DC 20044. Submissions may be hand delivered between the hours of 8 a.m. and 5 p.m. to CC:DOM:CORP:R (REG–247862–96), Courier's Desk, Internal Revenue Service, 1111 Constitution Avenue NW, Washington, DC. Alternatively, taxpayers may submit comments electronically via the Internet by selecting the ''Tax Regs'' option of the IRS Home Page, or by submitting comments directly to the IRS Internet site at http://www.irs.ustreas.gov/prod/tax—regs/comments.html.

FOR FURTHER INFORMATION CONTACT: Phyllis Haney, (202) 622–4290 (not a toll-free number).

SUPPLEMENTARY INFORMATION:

Background

Final and temporary regulations in the Rules and Regulations section of this issue of the Federal Register amend the Foundation and Similar Excise Taxes Regulations (26 CFR part 53) relating to sections 6011 and 6071. The final regulations contain rules relating to the requirement of a return to accompany payment of section 4958 excise taxes; the temporary regulations prescribe the time for filing that return.

The text of those temporary regulations also serves as the text of these proposed regulations. The preamble to the temporary regulations explains the temporary regulations.

These rules were first published in Notice 96–46 (1996–39 I.R.B. 7) (September 23, 1996). The new section 4958 excise taxes were added by section 1311 of the Taxpayer Bill of Rights 2, Public Law 104–168, 110 Stat. 1452, enacted July 30, 1996.

Special Analyses

It has been determined that this Treasury decision is not a significant regulatory action as defined in EO 12866. Therefore, a regulatory assessment is not required. It also has been determined that section 553(b) of the Administrative Procedure Act (5 U.S.C. chapter 5) does not apply to these regulations, and because the regulation does not impose a collection of information on small entities, the Regulatory Flexibility Act (5 U.S.C. chapter 6) does not apply. Pursuant to section 7805(f) of the Internal Revenue Code, these temporary regulations will be submitted to the Chief Counsel for Advocacy of the Small Business Administration for comment on their impact on small business.

Comments and Request for Public Hearing

Before these proposed regulations are adopted as final regulations, consideration will be given to any written comments (a signed original and eight (8) copies) that are submitted timely to the IRS. All comments will be available for public inspection and copying. A public hearing may be scheduled if requested in writing by a person that timely submits written comments. If a public hearing is scheduled, notice of the date, time, and place for the hearing will be published in the Federal Register.

Drafting Information

The principal author of these regulations is Phyllis Haney, Office of Associate Chief Counsel (Employee Benefits and Exempt Organizations). However, other personnel from the IRS and Treasury Department participated in their development.

List of Subjects in 26 CFR Part 53

Excise taxes, Foundations, Investments, Lobbying, Reporting and recordkeeping requirements.

Proposed Amendments to the Regulations

Accordingly, 26 CFR part 53 is proposed to be amended as follows:

PART 53—FOUNDATION AND SIMILAR EXCISE TAXES

Paragraph 1. The authority citation for part 53 continues to read as follows:

Authority: 26 U.S.C. 7805.

Par. 2. Section 53.6071–1 is amended by adding paragraph (f) to read as follows:

§ 53.6071–1 Time for filing returns.

* * * * *

(f) [The text of paragraph (f) of this section is the same as the text of § 53.6071–1T(f) published elsewhere in this issue of the Federal Register].

Margaret Milner Richardson,

Commissioner of Internal Revenue.

[FR Doc. 96–32377 Filed 12–31–96; 8:45 am]

BILLING CODE 4830–01–U

FEDERAL COMMUNICATIONS COMMISSION

47 CFR Part 73

[MM Docket No. 93–191, RM–8088]

Television Broadcasting Services; Pueblo, CO

AGENCY: Federal Communications Commission.

ACTION: Proposed rule; denial.

SUMMARY: This document denies the application for review jointly filed by the University of Southern Colorado and Sangre De Cristo Communications, Inc. of the *Report and Order*, 60 FR 37041 (July 19, 1995) in this proceeding which denied petitioners' joint petition to exchange their television channel assignments. The Commission determined that its rules did not require an exchange under the circumstances and that the requested exchange would not be granted because a short-spacing waiver granted to the noncommercial licensee KTSC(TV), largely on the grounds that it would extend noncommercial service, was not appropriate for the commercial licensee (KOAA–TV).

FOR FURTHER INFORMATION CONTACT: Arthur D. Scrutchins, Mass Media Bureau (202) 418–2180.

SUPPLEMENTARY INFORMATION: This is a synopsis of the Commission's Memorandum Opinion and Order, MM Docket No. 93–191, adopted November 21, 1996, and released December 16, 1996. The full text of this Commission decision is available for inspection and copying during normal business hours in the FCC Reference Center (Room 239), 1919 M St., NW., Washington, DC. The complete text of this decision may also be purchased from the Commission's copy contractors, International Transcription Service, Inc., (202) 857–3800, 2100 M Street, NW., Suite 140, Washington, DC 20037.

List of Subjects in 47 CFR Part 73

Television broadcasting.

Federal Communications Commission.

Douglas W. Webbink,

Chief, Policy and Rules Division, Mass Media Bureau.

[FR Doc. 96–33340 Filed 12–31–96; 8:45 am]

BILLING CODE 6712–01–P

DEPARTMENT OF COMMERCE

National Oceanic and Atmospheric Administration

50 CFR Part 679

[Docket No. 961217360–6360–01; I.D. 112596C]

RIN 0648–AI62

Fisheries of the Exclusive Economic Zone off Alaska; Groundfish of the Bering Sea and Aleutian Islands Area; Prohibited Species Catch Limits for Tanner Crab

AGENCY: National Marine Fisheries Service (NMFS), National Oceanic and Atmospheric Administration (NOAA), Commerce.

ACTION: Proposed rule; request for comments.

SUMMARY: NMFS issues this proposed rule to implement Amendment 41 to the Fishery Management Plan for the Groundfish Fishery of the Bering Sea and Aleutian Islands Area (FMP). This rule would adjust the prohibited species catch (PSC) limits for Tanner crab (*Chionoecetes bairdi*) (*C. bairdi*) in Zones 1 and 2 of the Bering Sea. This measure is necessary to protect the *C. bairdi* stock in the Bering Sea, which has declined to a level that presents a serious conservation problem. Changes to the previously proposed 1997 *C. bairdi* prohibited species bycatch allowances for the Bering Sea and Aleutian Islands management area (BSAI) trawl fisheries are also proposed to reflect the proposed adjustment to the *C. bairdi* PSC limits. This measure is intended to accomplish the objectives of the FMP.

DATES: Comments must be received by February 18, 1997.

ADDRESSES: Comments should be sent to Ronald J. Berg, Chief, Fisheries Management Division, Alaska Region, NMFS, P.O. Box 21668, Juneau, AK 99802, Attn: Lori J. Gravel, or delivered to the Federal Building, 709 West 9th Street, Juneau, AK. Copies of the Environmental Assessment/Regulatory Impact Review/Initial Regulatory Flexibility Analysis (EA/RIR/IRFA) prepared for the amendment may be obtained from the North Pacific Fishery Management Council, Suite 306, 605 West 4th Avenue, Anchorage, AK 99501–2252; telephone: 907–271–2809.

FOR FURTHER INFORMATION CONTACT: Kim S. Rivera, 907–586–7228.

SUPPLEMENTARY INFORMATION: The U.S. groundfish fisheries of the BSAI in the exclusive economic zone are managed by NMFS under the FMP. The FMP was prepared by the North Pacific Fishery Management Council (Council) under the Magnuson-Stevens Fishery Conservation and Management Act (16 U.S.C. 1801 *et seq.;* Magnuson-Stevens Act) and is implemented by regulations for the U.S. fisheries at 50 CFR part 679. General regulations that also pertain to U.S. fisheries appear at subpart H of 50 CFR part 600.

Background

Bering Sea crab stocks currently are at relatively low levels, based on recent NMFS bottom trawl survey data. Recruitment and exploitable biomass of Bering Sea Tanner crab (*C. bairdi*) stocks are near historically low levels. The 1995 Tanner crab season produced only 4.5 million lb (2,017 mt) for the 196 vessels participating. This amount is the lowest catch since the fishery reopened in 1988. Preliminary 1996 survey data indicate that the stock decline will continue.

Crab is a bycatch species in the groundfish fisheries. An objective of the FMP is to minimize the impact of groundfish fisheries on crab and other prohibited species, while providing for rational and optimal use of the region's fishery resources. All gear types used to catch groundfish have some potential to catch crab incidentally, but the large majority of crab bycatch occurs in trawl fisheries.

The Council initiated several analyses in January 1995 to examine measures to further limit crab bycatch in the groundfish fisheries. Proposed alternatives included a reduction of existing crab bycatch limits (with an option that the limits be based on crab abundance) and establishment of bycatch limits for snow crab (*C. opilio*).

At its January 1996 meeting, the Council requested that a suite of crab bycatch management measures be examined in one package, so that the impacts of these measures could be analyzed in a comprehensive manner. An additional option of establishing PSC limits for Tanner crab based on abundance thresholds was proposed by the Alaska Crab Coalition in January 1996 and was added to the analysis at the request of the Council.

At its April 1996 meeting, the Council modified the alternatives to include reduced PSC limits for Tanner crab and snow crab. In June 1996, the Council formed an industry work group to review proposed PSC limits for Tanner and snow crab. This work group consisted of three crab fishery representatives, three trawl fishery representatives, and one shoreside processing representative. The group met August 29–30, 1996, and came to a consensus on PSC limits for *C. bairdi* crab. The agreement negotiated by affected industry groups resulted in a proposal for an annual specification of PSC limits for *C. bairdi* based on the total abundance of *C. bairdi* as indicated by the most recent NMFS bottom trawl survey.

At its September 1996 meeting, the Council endorsed the industry work group agreement and took final action on *C. bairdi* PSC limits under Amendment 41 to the FMP. The Council also encouraged the industry work group to continue to pursue an agreement for an appropriate PSC limit for *C. opilio* crab that could be presented to the Council in the near future. Adjustment of the *C. bairdi* PSC Limit.

Amendment 41 would modify the current *C. bairdi* PSC limits of 1,000,000 animals in Zone 1 and 3,000,000 animals in Zone 2 and provide for the annual specification of the revised PSC limits, based on the total estimated abundance of *C. bairdi* as follows:

Zone	Abundance	PSC limit (number of animals)
1	0–150 million crabs.	0.5% of abundance.
	150–270 million crabs.	750,000.
	270–400 million crabs.	850,000.
	over 400 million crabs.	1,000,000.
2	0–175 million crabs.	1.2% of abundance.
	175–290 million crabs.	2,100,000.
	290–400 million crabs.	2,550,000.
	over 400 million crabs.	3,000,000.

Based on the abundance of *C. bairdi* estimated from the 1996 NMFS trawl survey (185 million crabs), the PSC limit for *C. bairdi* in 1997 would be 750,000 crabs in Zone 1 and 2,100,000 crabs in Zone 2. Details of and justification for the proposed PSC limit adjustments under Amendment 41 are as follows:

C. bairdi PSC limits for U.S. trawl vessels in specified BSAI fisheries were first established in 1986 by emergency

rule (51 FR 20652, June 6, 1986) and extended in 1987 under Amendment 10 to the FMP (52 FR 8592; March 19, 1987). In 1987 and 1988, the *C. bairdi* PSC limits were the subject of negotiations between groundfish, crab, and halibut fishery representatives under the premise that measures to limit bycatch of one prohibited species may impact the bycatch rates of another prohibited species. Determination of the PSC limits began with the best available scientific information on the abundance and distribution of the specified crab and halibut species and their rate of bycatch in fisheries for certain species of groundfish. These determinations were reviewed and debated in meetings of the Council's Bycatch Committee. Based on this process, the *C. bairdi* PSC limits were established in 1989 at 1,000,000 animals in Zone 1 and 3,000,000 animals in Zone 2 (54 FR 32642; August 9, 1989). Regulations at § 679.21(e) provide for the apportionment of these PSC limits among trawl fisheries during the annual specification process as fishery-specific bycatch allowances. When a fishery attains its specified bycatch allowance, the zone is closed to that fishery.

The bycatch of *C. bairdi* in the 1995 BSAI groundfish fisheries totaled 2.3 million crabs (923,000 in Zone 1 and approximately 1.3 million in Zone 2), which is reduced significantly from 4.3 million in 1992. About 98 percent of the *C. bairdi* bycatch occurs in the trawl fisheries. The yellowfin sole fishery accounts for most of the Tanner crab bycatch, followed by the rock sole/flathead sole/other flatfish fisheries. Bycatch is highest in NMFS statistical area 509 in Zone 1 and statistical area 513 in Zone 2. Large numbers of Tanner crab also are consistently taken in statistical areas 517 and 521 in Zone 2. Data indicate that the recent level of Tanner crab bycatch in trawl fisheries (1992–95 average of 3.06 million) is high relative to the 1978–87 average of 2.06 million.

The Council's proposed adjustment to the *C. bairdi* PSC limits is an effort to protect further the stocks of Bering Sea Tanner crab by limiting the incidental take of this species when the stock is depressed. The proposed criteria for the annual specification of the *C. bairdi* PSC limits were developed by the Council-appointed industry work group. Although the industry work group did not make recommendations for *C. opilio* PSC limits, the group will meet in the future and attempt to reach consensus on this issue.

Economic Considerations

Estimates based on the Bering Sea simulation model using 1993 and 1994 fishery data indicate that the proposed management measure would lead to a slight decrease in the net benefits to the Nation over the status quo. The approximately $1.2 million decrease in net benefits using 1993 data and approximately $2.2 million decrease in net benefits using 1994 data would have resulted in decreases of 0.4 percent and a 0.8 percent, respectively, of the net benefits to the Nation, had the proposed measure been effective during those years. However, given a certain level of uncertainty inherent in the data, and in the model procedures, these predicted changes in net benefits to the Nation are not great enough to indicate an actual change from the status quo.

Implementation of the proposed measure, along with area closures proposed to protect red king crab under Amendment 37 (61 FR 65985, December 16, 1996; final rule cite), may have cumulative effects on groundfish trawl fisheries. As noted by the Council's Scientific and Statistical Committee, time and area closures cause temporal and spatial shifts in groundfish fishery effort. With each additional bycatch restriction, options for the groundfish trawl fleets are reduced, resulting in effort shifts that could increase the bycatch of other prohibited species. However, these tradeoffs will occur with any protection closure that may be implemented. Proposed Changes to the Proposed 1997 Prohibited Species Bycatch Allowances for the BSAI Trawl Fisheries.

As part of the annual BSAI groundfish specification process, the Council recommended PSC allowances for the BSAI trawl fisheries at its September 1996 meeting. NMFS published in the Federal Register the proposed 1997 BSAI groundfish specifications that include the PSC allowances for the trawl fisheries (61 FR 60076, November 26, 1996). Table 7 of the proposed 1997 PSC allowances for the BSAI trawl fisheries would be amended as follows to reflect the proposed adjustments to the *C. bairdi* PSC limits:

TABLE 7.—PROPOSED 1997 PROHIBITED SPECIES BYCATCH ALLOWANCES OF C. BAIRDI, TANNER CRAB FOR THE BSAI TRAWL FISHERIES

Trawl fisheries	Zone 1	Zone 2
	(number)	
Yellowfin sole	187,500	1,071,000
Rocksole/flathead sole/otherflat	318,750	357,000
Turbot/arrowtooth/sablefish	0	0
Rockfish	0	6,300
Pacific cod	187,500	182,700
Pollock/Atka mackerel/other	56,250	483,000
Total	750,000	2,100,000

These fishery bycatch allowances reflect the same relative 1997 fishery apportionments of the *C. bairdi* PSC limits as those proposed by the Council at its September 1996 meeting.

Classification

This proposed rule to implement Amendment 41 has been preliminarily determined to be adequate to put before the public for comment. At this time, NMFS has not determined that the FMP amendment this rule would implement is consistent with the national standards, other provisions of the Magnuson-Stevens Act, and other applicable laws. NMFS, in making that determination, will take into account the data, views, and comments received during the comment period.

This proposed rule has been determined to be not significant for purposes of E.O. 12866.

The Council prepared an IRFA as part of the RIR, which describes the impact this proposed rule would have on small entities, if adopted. Based on the analysis, it was determined that this proposed rule could have a significant economic impact on a substantial number of small entities. In 1995 there were 156 trawl vessels in the BSAI. Those trawl vessels and processors participating in the BSAI groundfish fishery could be affected by this proposed action. Most catcher vessels harvesting groundfish off Alaska are considered small entities and would be affected by the reduced *C. bairdi* PSC limits. The economic impact on small entities that would result from reduced PSC limits could result in a reduction in annual gross revenues of more than 5 percent and would have a significant economic impact on a substantial number of small entities. The 132 trawl catcher vessels that harvested BSAI groundfish in 1993 are considered small entities. Many of these vessels could be affected by the proposed reduced PSC limits, based on the best available information. A copy of this analysis is

available from the Council (see **ADDRESSES**).

List of Subjects in 50 CFR Part 679

Fisheries, Reporting and recordkeeping requirements.

Dated: December 27, 1996.

Nancy Foster,

Deputy Assistant Administrator for Fisheries, National Marine Fisheries Service.

For the reasons set out in the preamble, 50 CFR part 679 is proposed to be amended as follows:

PART 679—FISHERIES OF THE EXCLUSIVE ECONOMIC ZONE OFF ALASKA

1. The authority citation for part 679 continues to read as follows:

Authority: 16 U.S.C. 773 *et seq.*, 1801 *et seq.*

2. In § 679.21, paragraph (e)(1)(iii) is removed, paragraphs (e)(1)(iv) through (vii) are redesignated as paragraphs (e)(1)(iii) through (vi), respectively, and paragraph (e)(1)(ii) is revised to read as follows:

§ 679.21 Prohibited species bycatch management.

* * * * *

(e) * * *

(1) * * *

(ii) *Tanner crab (C. bairdi).* The PSC limit of *C. bairdi* Tanner crabs caught by trawl vessels while engaged in directed fishing for groundfish in Zones 1 and 2 during any fishing year will be specified annually by NMFS under paragraph (e)(6) of this section, based on total abundance of *C. bairdi* Tanner crab as indicated by the NMFS annual bottom trawl survey, using the criteria set out under paragraphs (e)(1)(ii)(A) and (B) of this section.

(A) *Zone 1.* When the total abundance of *C. bairdi* Tanner crabs in Zone 1 is:

(*1*) 150 million animals or less, the PSC limit will be 0.5 percent of the total abundance.

(*2*) Over 150 million to 270 million animals, the PSC limit will be 750,000 animals.

(*3*) Over 270 million to 400 million animals, the PSC limit will be 850,000 animals.

(*4*) Over 400 million animals, the PSC limit will be 1,000,000 animals.

(B) *Zone 2.* When the total abundance of C. bairdi Tanner crabs in Zone 2 is:

(*1*) 175 million animals or less, the PSC limit will be 1.2 percent of the total abundance.

(*2*) Over 175 million to 290 million animals, the PSC limit will be 2,100,000 animals.

(*3*) Over 290 million to 400 million animals, the PSC limit will be 2,550,000 animals.

(*4*) Over 400 million animals, the PSC limit will be 3,000,000 animals.

* * * * *

[FR Doc. 96–33369 Filed 12–30–96; 9:45 am]

BILLING CODE 3510–22–W

Notices

Federal Register
Vol. 62, No. 1
Thursday, January 2, 1997

This section of the FEDERAL REGISTER contains documents other than rules or proposed rules that are applicable to the public. Notices of hearings and investigations, committee meetings, agency decisions and rulings, delegations of authority, filing of petitions and applications and agency statements of organization and functions are examples of documents appearing in this section.

DEPARTMENT OF AGRICULTURE

Rural Housing Service

Rural Business-Cooperative Service

Rural Utilities Service

Farm Service Agency

Notice of Request for Extension of a Currently Approved Information Collection

AGENCIES: Rural Housing Service, Rural Business-Cooperative Service, Rural Utilities Service, and Farm Service Agency, USDA.

ACTION: Proposed collection: comments request.

SUMMARY: In accordance with the Paperwork Reduction Act of 1995, this notice announces the Rural Housing Service (RHS), the Rural Business-Cooperative Service (RBS), Rural Utilities Service (RUS), and the Farm Service Agency's (FSA) intention to request an extension for a currently approved information collection in support of compliance with applicable acts for planning and performing construction and other development work.

DATES: Comments on this notice must be received by March 3, 1997 to be assured consideration.

FOR FURTHER INFORMATION CONTACT: Samuel J. Hodges III, Architect, Program Support Staff, RHS, U.S. Department of Agriculture, Stop 0761, 1400 Independence Ave., S.W., Washington, DC 20250, Telephone (202) 720–9653.

SUPPLEMENTARY INFORMATION:

Title: RD 1924–A, ''Planning and Performing Construction and Other Development.''

OMB Number: 0575–0042.

Expiration Date of Approval: March 31, 1997.

Type of Request: Extension of a currently approved information collection.

Abstract: The information collection under OMB Number 0575–0042 enables the Rural Housing Service to effectively administer the policies, methods and responsibilities in the planning and performing of construction and other development work for the related construction programs.

Section 501 of Title V of the Housing Act of 1949, as amended, authorizes the Secretary Of Agriculture to extend financial assistance to construct, improve, repair, replace or rehabilitate dwellings, farm buildings and/or related facilities to provide decent, safe and sanitary living conditions and adequate farm buildings and other structures in rural areas.

Section 506 of the Act requires that all new buildings and repairs shall be constructed in accordance with plans and specifications as required by the Secretary and that such construction be supervised and inspected.

Section 509 grants the Secretary the power to determine and prescribe the standards of adequate farm housing and other buildings. The Housing and Urban-Rural Recovery Act of 1983 amended Section 509 (a) and Section 515 to require residential buildings and related facilities comply with the standards prescribed by the Secretary of Agriculture, the standards prescribed by the Secretary of Housing and Urban Development, or the standards prescribed in any of the nationally recognized model building codes.

Similar authorizations are contained in Section 303, 304, 306, and 339 of the Consolidated Farm and Rural Development Act, as amended.

In several sections of both acts, loan limitations are established as percentages of development cost, requiring careful monitoring of those costs. Also, the Secretary is authorized to prescribe regulations to ensure that Federal funds are not wasted or dissipated and that construction will be undertaken economically and will not be of elaborate or extravagant design or materials.

Other information collection is required to conform to numerous Public Laws applying to all federal agencies, such as: Civil Rights Acts of 1964 and 1968, Davis-Bacon Act, Historic Preservation Act, Environmental Policy Act; and to conform to Executive Orders governing use of federal funds. This information is cleared through the appropriate enforcing Agency or other executive Department.

The Agencies provide forms and/or guidelines to assist in the collection and submission of information; however, most of the information may be collected and submitted in the form and content which is accepted and typically used in normal conduct of planning and performing development work in private industry when a private lender is financing the activity. The information is usually submitted via hand delivery or U.S. Postal Service to the appropriate Agency office.

The information is used by the Agencies to determine whether a loan/grant can be approved, to ensure that the Agency has adequate security for the loans financed, to provide for sound construction and development work and to determine that the requirements of the applicable acts have been met. The information is also used to monitor compliance with the terms and conditions of the Agencies loan/grant and to monitor the prudent use of federal funds.

If the information were not collected and submitted, the Agencies would not have control over the type and quality of construction and development work planned and performed with federal funds. The Agencies would not be assured that the security provided for loans is adequate, nor would the Agencies be certain that decent, safe and sanitary dwelling or other adequate structures were being provided to rural residents as required by the different acts.

Estimate of Burden: Public reporting burden for this collection of information is estimated to average .33 hours per response.

Respondents: Individuals or households, farms, business or other for-profit, non-profit institutions, and small businesses or organizations.

Estimated Number of Respondents: 29,369.

Estimated Number of Responses per Respondent: 14.03.

Estimated Total Annual Burden on Respondents: 139,632 hours.

Copies of this information collection can be obtained from Barbara Williams, Regulations and Paperwork Management Division, at (202) 720–9734.

Comments

Comments and invited on: (a) whether the proposed collection of information is necessary for the proper performance of the function of RHS, including whether the information will have practical utility; (b) the accuracy of RHS's estimate of the burden of the proposed collection of information, including the validity of methodology and assumptions used; (c) ways to enhance the quality, utility, and clarity of the information to be collected; and (d) ways to minimize the burden of the collection of information on those who are to respond, including through the use of appropriate automated, electronic, mechanical, or other technological collection techniques or other forms of information technology. Comments may be sent to Barbara Williams, Regulations and Paperwork Management Division, U.S. Department of Agriculture, Rural Development, Stop 0743, Washington, DC 20250–0753. All responses to this notice will be summarized and included in the request for OMB approval. All comment will also become a matter of public record.

Dated: December 20, 1996.

Jan E. Shadburn,

Acting Administrator, Rural Housing Service.

Dated: December 20, 1996.

Dayton J. Watkins,

Administrator, Rural Business-Cooperative Service.

Dated: December 20, 1996.

Wally Beyer,

Administrator, Rural Utilities Service.

Dated: December 23, 1996.

Bruce R. Weber,

Acting Administrator, Farm Service Agency.

[FR Doc. 96–33327 Filed 12–31–96; 8:45 am]

BILLING CODE 3410–XV–U

Federal Crop Insurance Corporation

Termination of the Standard Reinsurance Agreement

AGENCY: Federal Crop Insurance Corporation, USDA.

ACTION: Notice of termination.

SUMMARY: The Federal Crop Insurance Corporation (FCIC) herewith gives notice that it will terminate the current (1995/1997) Standard Reinsurance Agreement effective as of June 30, 1997.

EFFECTIVE DATE: June 30, 1997.

FOR FURTHER INFORMATION CONTACT: E. Heyward Baker, Acting Director, Reinsurance Services Division, Insurance Services, Risk Management Agency, United States Department of Agriculture, 1400 Independence Avenue, SW, Room 6727–S, Washington, D.C. 20250, telephone (202) 720–4232.

SUPPLEMENTARY INFORMATION: In accordance with section V.J. of the Standard Reinsurance Agreement, this action is necessary to provide FCIC sufficient time to address proposed changes for the 1998 Standard Reinsurance Agreement, including those recommended by the crop insurance industry and the Office of Management and Budget and proposed in the President's 1998 budget proposal. FCIC also intends to address reinsurance for Crop Revenue Coverage and catastrophic risk protection policies.

Accordingly, the FCIC herewith gives notice that it will terminate the current (1995/1997) Standard Reinsurance Agreement effective June 30, 1997.

Signed in Washington, D.C. on December 27, 1996.

Kenneth D. Ackerman,

Manager, Federal Crop Insurance Corporation.

[FR Doc. 97–00059 Filed 12-30-96; 12:08 pm]

BILLING CODE 3410–FA–P

Forest Service

Revision of the Land and Resource Management Plan for the Cibola National Forest and Kiowa, Rita Blanca, Black Kettle and McClellan Creek National Grasslands, Located in Colflax, Harding, Mora, Union, Catron, Sierra, Socorro, Bernalillo, Sandoval, Lincoln, Torrance, Valencia, McKinley and Cibola Counties, NM; Gray, Hemphill, and Dallam Counties, Texas; Roger Mills and Cimarron Counties, OK

AGENCY: Forest Service, USDA.

ACTION: Notice of intent to prepare an Environmental Impact Statement.

SUMMARY: Pursuant to 36 CFR 219.10(g), the Regional Forester for the Southwestern Region gives notice of the agency's intent to prepare an Environmental Impact Statement for the Revised Cibola National Forest Land and Resource Management Plan (Forest Plan). According to 36 CFR 219.10(g), Forest Plans are ordinarily revised on a 10-year cycle. The existing Cibola Forest Plan was approved on July 15, 1985, and has eight amendments.

The responsible official for approving the Forest Plan revision is Charles W. Cartwright, Jr., Regional Forester, Southwestern Region, USDA Forest Service, 517 Gold Avenue, SW, Albuquerque, New Mexico 87102. The Forest Supervisor, Cibola National Forest, is delegated responsibility for preparing the Environmental Impact Statement.

DATES: Comments concerning the scope of the analysis should be received in writing by March 11, 1997.

ADDRESSES: Send written comments to Jeanine A. Derby, Forest Supervisor, Cibola National Forest, 2113 Osuna Road NE, Suite A, Albuquerque, New Mexico, 87113–1001.

FOR FURTHER INFORMATION CONTACT: Jimmy E. Hibbetts, Planning Staff or Barney Lyons, Team Leader, (505) 761–4650.

SUPPLEMENTARY INFORMATION: The Land and Resource Management Plan defines the long-term direction for managing the Cibola National Forest and the Kiowa, Rita Blanca, Black Kettle and McClellan Creek National Grasslands. The revised Forest Plan will take an ecological approach to achieve multiple-use management of the National Forest and National Grasslands.

The Cibola National Forest identified revision topics through a process by examining the Forest Plan and determining items that need to be changed. The Five Year Evaluation and Monitoring Reports for 1986 to 1990 and 1991 to 1996 were also used to identify revision topics. This process included a number of public meetings, newsletters and meetings with local government officials and interest groups. Over 3000 letters were sent to Congressional, governmental, and tribal agencies, organizations, businesses, and individuals. These contacts all aided in identifying the revision topics. Criteria was used to screen potential changes into five possible categories of action:

Revision Topics
Implementation Topics
Legislation Topics
Topics for responsible Government Entities
Research Topics

The Revision Topics are those areas of the Forest Plan, identified through monitoring, evaluation and public involvement, where a potential need for change was identified. The Revision Topics are:

Balancing Land Capability with Resource Demand
Watershed Condition Assessment and Water Uses, Rights, Quality, and Availability Assessment
Biological Diversity
Native American Collaboration
Land Grant Community Collaboration
Land Uses
Oil and Gas Leasing
Population Growth and Social Demographics
Rural Community Economics

Scenery Management Systems
Urban Interface
Wilderness Management
Recreation Management
Fire Management
Response to Legal Mandates
Access Management
Range Management

The Cibola National Forest intends to examine the primary decisions made in the Forest Plan by addressing the preliminary issues and focusing on revision topics. The following five significant preliminary issues have been identified through public comments:

Biological Consequences of Forest Management
Livestock Grazing
Recreation/Wilderness/Travel Management
Watershed Conditions
Balancing Land Capability with Resources Demands

The primary decisions to be made in the Forest Plan are:

(a) Establishment of Forest-wide multiple-use goals and objectives, including a description of the desired condition of the National Forest and Grasslands and identification of the quantities that are expected to be produced or provided during the RPA planning period (36 CFR 219.11(b)).

(b) Establishment of multiple-use prescriptions and associated standards and guidelines for each management area including proposed and probable management practices such as planned timber sale programs (36 CFR 219.11(c)).

(c) Establishment of monitoring and evaluation requirements (36 CFR 219.11(d)).

(d) Establishment of Forest-wide standards and guidelines to fulfill the requirements of 16 U.S.C. 1604 (The National Forest Management Act) applying to the future activities (resource integration requirements (36 CFR 219.13 through 219.27)).

(e) Establishment of land administratively available for oil and gas leasing and the stipulations that must be applied to specific lease areas in order that the Bureau of Land Management can authorize leases for oil and gas production, subject to review (36 CFR 228.102(d) and 228.102(e)).

(f) Establishment of land suitable for timber production, grazing capability and suitability and other resource activities (16 USC 1604(k) 36 CFR 29.14, 219.15, 219.20 and 219.21).

(g) Recommendations for the establishment of wilderness and other special designations such as research natural areas (36 CFR 219.17(a) and 219.25).

Alternatives required by implementing regulations of the National Forest Management Act will be considered during the planning process. An alternative addressing the Resource Planning Act program tentative resource objectives, a ''no- action'' alternative that reflects the current level of goods and services, and a wide range of alternatives will be developed to respond to issues, management concerns or resource opportunities identified during the planning process (40 CFR 1501.7, 1502.14(c)).

The Forest Service continues to invite comments and suggestions from Federal, State, and local agencies, Native American tribes, individuals and organizations on the scope of the analysis to be included in the Draft Environmental Impact Statement (DEIS). In addition, the Forest Service gives notice that it is beginning a full environmental analysis and decision making process for this proposal so that interested or affected people may know how they can participate in the environmental analysis and contribute to the final decision. Public meetings will be conducted throughout the planning process and newsletters will be sent out periodically.

Forest Service personnel will describe and explain the preliminary alternatives the agency has identified and the process of environmental analysis and disclosure to be followed. Written comments are encouraged. Additional meetings with individuals or groups may be arranged by contacting Karen Carter, Public Affairs Officer, (505) 761–4650.

The Draft Environmental Impact Statement and proposed Revised Forest Plan should be available for public review in May 1999. After a minimum comment period of 90 days, the Final Environmental Impact Statement and Revised Forest Plan should be completed by March 2000.

The 90 day public comment period on the Draft Environmental Impact Statement will commence on the day the Environmental Protection Agency publishes a ''Notice of Availability'' in the Federal Register.

It is very important that those interested in this proposed action participate at that time. To be the most helpful, written comments on the Draft Environmental Impact Statement should be as specific as possible and may also address the adequacy of the statement or the merits of the alternatives formulated and discussed in the statements (see The Council on Environmental Quality Regulations for implementing the procedural provisions of the national Environmental Policy Act at 40 CFR 1503.3). Please note that comments you make on the Draft Environmental Impact Statement will be regarded as public information.

In addition, Federal court decisions have established that reviewers of Draft Environmental Impact Statements must structure their participation in the environmental review of the proposal so that it is meaningful and alerts an agency to the reviewers' position and contentions (*Vermont Yankee Nuclear Power Corp.* v. *NRDC*, 435 U.S. 519, 553 (1978)). Environmental objections that could have been raised at the draft stage may be waived or dismissed by the courts if not raised until after completion of the Final Environmental Impact Statement (*City of Angoon* v. *Hodel*, (9th Circuit, 803 F.2d 1018, 1022 (1986) and *Wisconsin Heritages, Inc.* v. *Harris*, 490F. Supp. 1334, 1338 (E.D. Wis. 1980)). Because of these court rulings, it is very important that those interested in this proposed action participate by the close of the 90 day comment period so that substantive comments and objections are made available to the Forest Service at a time when it can meaningfully consider them and respond to them in the Final Environmental Impact Statement.

Dated: December 26, 1996.

Robert V. Clayton,
Acting Regional Forester.

[FR Doc. 96–33331 Filed 12–31–96; 8:45 am]
BILLING CODE 3410–11–M

Oregon Coast Provincial Advisory Committee Meeting

AGENCY: Forest Service, USDA.

ACTION: Notice of meeting.

SUMMARY: The Oregon Coast Provincial Advisory Committee (PAC) will meet on January 16, 1997, in Newport, Oregon, at the Hatfield Marine Science Center (Meeting Room 9/Fireside Room), 2030 S. Marine Science Drive, Newport, OR. The meeting will begin at 9:00 a.m. and continue until 3:45 p.m. Agenda items to be covered include: (1) evaluation of the PAC (where we are and future direction), (2) Adaptive Management Area Subcommittee recommendations, and (3) open public forum. All Oregon Coast Provincial Advisory Committee meetings are open to the public. An ''open forum'' is scheduled at 9:15 a.m. Interested citizens are encouraged to attend. The committee welcomes the public's written comments on committee business at any time.

FOR FURTHER INFORMATION CONTACT: Direct questions regarding this meeting to Trish Hogervorst, Public Affairs Officer, Bureau of Land Management, at (503) 375–5657, or write to Forest

Supervisor, Siuslaw National Forest, P.O. Box 1148, Corvallis, Oregon 97339.

Dated: December 20, 1996.

James R. Furnish,

Forest Supervisor.

[FR Doc. 96–33318 Filed 12–31–96; 8:45 am]

BILLING CODE 3410–11–M

Grain Inspection, Packers and Stockyards Administration

Designations for the Kankakee (IL) Area and the States of California and Washington

AGENCY: Grain Inspection, Packers and Stockyards Administration (GIPSA).

ACTION: Notice.

SUMMARY: GIPSA announces the designation of Kankakee Grain Inspection, Inc. (Kankakee), the California Department of Food and Agriculture (California), and the Washington Department of Agriculture (Washington) to provide official services under the United States Grain Standards Act, as amended (Act).

EFFECTIVE DATE: February 1, 1997.

ADDRESSES: USDA, GIPSA, Janet M. Hart, Chief, Review Branch, Compliance Division, STOP 3604, 1400 Independence Avenue S.W., Washington, DC 20250–3604.

FOR FURTHER INFORMATION CONTACT: Janet M. Hart, telephone 202–720–8525.

SUPPLEMENTARY INFORMATION:

This action has been reviewed and determined not to be a rule or regulation as defined in Executive Order 12866 and Departmental Regulation 1512–1; therefore, the Executive Order and Departmental Regulation do not apply to this action.

In the August 1, 1996, Federal Register (61 FR 40191), GIPSA asked persons interested in providing official services in the geographic areas assigned to Kankakee, California, and Washington to submit an application for designation. Applications were due by September 2, 1996. Kankakee, California, and Washington, the only applicants, each applied for designation to provide official services in the entire area currently assigned to them.

Since Kankakee, California, and Washington were the only applicants for the respective areas, GIPSA did not ask for comments on the applicants.

GIPSA evaluated all available information regarding the designation criteria in Section 7(f)(l)(A) of the Act; and according to Section 7(f)(l)(B), determined that Kankakee, California, and Washington are able to provide official services in the geographic areas for which they applied. Effective February 1, 1997, and ending January 31, 2000, Kankakee, California, and Washington are designated to provide official services in the geographic areas specified in the August 1, 1996, Federal Register.

Interested persons may obtain official services by contacting Kankakee at 815–932–2851, California at 916–654–0743, and Washington at 360–902–1827.

AUTHORITY: Pub. L. 94–582, 90 Stat. 2867, as amended (7 U.S.C. 71 *et seq.*)

Dated: December 23, 1996

Neil E. Porter

Director, Compliance Division

[FR Doc. 96–33325 Filed 12–31–96; 8:45 am]

BILLING CODE 3410–EN–F

Opportunity for Designation in the Jamestown (ND), Sioux City (IA), and Tischer (IA) Areas

AGENCY: Grain Inspection, Packers and Stockyards Administration (GIPSA).

ACTION: Notice.

SUMMARY: The United States Grain Standards Act, as amended (Act), provides that official agency designations will end not later than triennially and may be renewed. The designation of Grain Inspection, Inc. (Jamestown), will end July 31, 1997, according to the Act, and the designations of Sioux City Inspection and Weighing Service Company (Sioux City), and A.V. Tischer and Son, Inc. (Tischer), will end June 30, 1997, according to the Act. GIPSA is asking persons interested in providing official services in the Jamestown, Sioux City, and Tischer areas to submit an application for designation.

DATES: Applications must be postmarked or sent by telecopier (FAX) on or before January 31, 1997.

ADDRESSES: Applications must be submitted to USDA, GIPSA, Janet M. Hart, Chief, Review Branch, Compliance Division, STOP 3604, 1400 Independence Avenue S.W., Washington, DC 20250–3604. Applications may be submitted by FAX on 202–690–2755. If an application is submitted by FAX, GIPSA reserves the right to request an original application. All applications will be made available for public inspection at this address located at 1400 Independence Avenue, S.W., during regular business hours.

FOR FURTHER INFORMATION CONTACT: Janet M. Hart, telephone 202–720–8525.

SUPPLEMENTARY INFORMATION:

This action has been reviewed and determined not to be a rule or regulation as defined in Executive Order 12866 and Departmental Regulation 1512–1; therefore, the Executive Order and Departmental Regulation do not apply to this action.

Section 7(f)(1) of the Act authorizes GIPSA's Administrator to designate a qualified applicant to provide official services in a specified area after determining that the applicant is better able than any other applicant to provide such official services. GIPSA designated Jamestown, main office located in Jamestown, North Dakota, to provide official inspection services under the act on August 1, 1994. GIPSA designated Sioux City, main office located in Sioux City, Iowa, and Tischer, main office located in Fort Dodge, Iowa, to provide official inspection services under the act on July 1, 1994.

Section 7(g)(1) of the Act provides that designations of official agencies shall end not later than triennially and may be renewed according to the criteria and procedures prescribed in Section 7(f) of the Act. The designation of Jamestown ends on July 31, 1997, according to the act, and the designations of Sioux City and Tischer end on June 30, 1997.

Pursuant to Section 7(f)(2) of the USGSA, the following geographic area, in the State of North Dakota, is assigned to Jamestown.

Bounded on the North by Interstate 94 east to U.S. Route 85; U.S. Route 85 north to State Route 200; State Route 200 east to U.S. Route 83; U.S. Route 83 southeast to State Route 41; State Route 41 north to State Route 200; State Route 200 east to State Route 3; State Route 3 north to U.S. Route 52; U.S. Route 52 southeast to State Route 15; State Route 15 east to U.S. Route 281; U.S. Route 281 south to Foster County; the northern Foster County line; the northern Griggs County line east to State Route 32;

Bounded on the East by State Route 32 south to State Route 45; State Route 45 south to State Route 200; State Route 200 west to State Route 1; State Route 1 south to the Soo Railroad line; the Soo Railroad line southeast to Interstate 94; Interstate 94 west to State Route 1; State Route 1 south to the Dickey County line;

Bounded on the South by the southern Dickey County line west to U.S. Route 281; U.S. Route 281 north to the Lamoure County line; the southern Lamoure County line; the southern Logan County line west to State Route l3; State Route l3 west to U.S. Route 83; U.S. Route 83 south to the Emmons County line; the southern Emmons County line; the southern Sioux County line west State Route 49; State Route 49 north to State Route 21; State Route 21 west to the Burlington-Northern (BN) line; the Burlington-Northern (BN) line

northwest to State Route 22; State Route 22 south to U.S. Route 12; U.S. Route 12 west-northwest to the North Dakota State line; and

Bounded on the West by the western North Dakota State line north to Interstate 94.

The following grain elevators, located outside of the above contiguous geographic area, are part of this geographic area assignment: Farmers Coop Elevator, Fessenden, Farmers Union Elevator, and Manfred Grain, both in Manfred, all in Wells County (located inside Grand Forks Grain Inspection Department, Inc.'s, area); and Norway Spur, and Oakes Grain, both in Oakes, Dickey County (located inside North Dakota Grain Inspection Service, Inc.'s, area).

Jamestown's assigned geographic area does not include the following grain elevators inside Jamestown's area which have been and will continue to be serviced by the following official agency: Minot Grain Inspection, Inc.: Benson Quinn Company, Underwood; and Missouri Valley Grain Company, Washburn, all in McLean County.

Pursuant to Section 7(f)(2) of the USGSA, the following geographic area, in the States of Iowa, Nebraska, and South Dakota, is assigned to Sioux City.

In Iowa:

Bounded on the North by the northern Iowa State line from the Big Sioux River east to U.S. Route 59;

Bounded on the East by U.S. Route 59 south to B24; B24 east to the eastern O'Brien County line; the O'Brien County line south; the northern Buena Vista County line east to U.S. Route 71; U.S. Route 71 south to the southern Sac County line;

Bounded on the South by the Sac and Ida County lines; the eastern Monona County line south to State Route 37; State Route 37 west to State Route 175; State Route 175 west to the Missouri River; and

Bounded on the West by the Missouri River north to the Big Sioux River; the Big Sioux River north to the northern Iowa State line.

In Nebraska:

Cedar, Dakota, Dixon, Pierce (north of U.S. Route 20), and Thurston Counties.

In South Dakota:

Bounded on the North by State Route 44 (U.S. 18) east to State Route 11; State Route 11 south to A54B; A54B east to the Big Sioux River;

Bounded on the East by the Big Sioux River; and

Bounded on the South and West by the Missouri River.

Pursuant to Section 7(f)(2) of the USGSA, the following geographic area, in the State of Iowa, is assigned to Tischer.

Bounded on the North by Iowa-Minnesota State line from U.S. Route 71 east to U.S. Route 169;

Bounded on the East by U.S. Route 169 south to State Route 9; State Route 9 west to U.S. Route 169; U.S. Route 169 south to the northern Humboldt County line; the Humboldt County line east to State Route 17; State Route 17 south to C54; C54 east to U.S. Route 69; U.S. Route 69 south to the northern Hamilton County line; the Hamilton County line west to R38; R38 south to U.S. Route 20; U.S. Route 20 west to the eastern and southern Webster County lines to U.S. Route 169; U.S. Route 169 south to E18; E18 west to the eastern Greene County line; the Greene County line south to U.S. Route 30;

Bounded on the South by U.S. Route 30 west to E53; E53 west to N44; N44 north to U.S. Route 30; U.S. Route 30 west to U.S. Route 71; and

Bounded on the West by U.S. Route 71 north to the Iowa-Minnesota State line.

The following grain elevators, located outside of the above contiguous geographic area, are part of this geographic area assignment: Farmers Co-op Elevator, Boxholm, Boone County (located inside Central Iowa Grain Inspection Service, Inc.'s, area); and West Bend Elevator Co., Algona, Kossuth County; Big Six Elevator, Burt, Kossuth County; Gold-Eagle, Goldfield, Wright County; and Farmers Co-op Elevator, Holmes, Wright County (located inside D. R. Schaal Agency's area).

Interested persons, including Jamestown, Sioux City, and Tischer, are hereby given the opportunity to apply for designation to provide official services in the geographic areas specified above under the provisions of Section 7(f) of the Act and section 800.196(d) of the regulations issued thereunder. Designation in the Jamestown geographic area is for the period beginning August 1, 1997, and ending July 31, 2000. Designation in the Sioux City and; Tischer geographic areas is for the period beginning July 1, 1997, and ending June 30, 2000. Persons wishing to apply for designation should contact the Compliance Division at the address listed above for forms and information.

Applications and other available information will be considered in determining which applicant will be designated.

AUTHORITY: Pub. L. 94–582, 90 Stat. 2867, as amended (7 U.S.C. 71 *et seq.*)

Dated: December 23, 1996

Neil E. Porter

Director, Compliance Division

[FR Doc. 96–33326 Filed 12–31–96; 8:45 am]

BILLING CODE 3410–EN–F

ARCHITECTURAL AND TRANSPORTATION BARRIERS COMPLIANCE BOARD

Notice of Meeting

AGENCY: Architectural and Transportation Barriers Compliance Board.

ACTION: Notice of meeting.

SUMMARY: The Architectural and Transportation Barriers Compliance Board (Access Board) has scheduled its regular business meetings to take place in Washington, D.C. on Tuesday and Wednesday, January 14–15, 1997 at the times and location noted below.

DATES: The schedule of events is as follows:

Tuesday, January 14, 1997

9:00–11:00 AM Ad Hoc Committee on Bylaws and Statutory Review
11:00–Noon Planning and Budget Committee
1:30–5:00 PM ADAAG Revision—Discussion of Issues (Closed Meeting)

Wednesday, January 15, 1997

8:30–10:00 AM Long-Range Planning Group
10:00–Noon Technical Programs Committee
1:30–3:30 PM Board Meeting

ADDRESSES: The meetings will be held at: Marriott at Metro Center, 775 12th Street, N.W., Washington, D.C.

FOR FURTHER INFORMATION CONTACT: For further information regarding the meetings, please contact Lawrence W. Roffee, Executive Director, (202) 272–5434 ext. 14 (voice) and (202) 272–5449 (TTY).

SUPPLEMENTARY INFORMATION: At the Board meeting, the Access Board will consider the following agenda items:

- Approval of the Minutes of the November 13, 1996 Board Meeting.
- Planning and Budget Committee Report.
- Technical Programs Committee Report.
- Ad Hoc Committee on Bylaws and Statutory Review Report.
- Play Facilities Regulatory Negotiation Committee Report.
- ADAAG Revision-Rulemaking Process and Schedule.
- Telecommunications Access Advisory Committee Report.

All meetings are accessible to persons with disabilities. Sign language interpreters and an assistive listening system are available at all meetings.

David Capozzi,

Director, Office of Technical and Information Services.

[FR Doc. 96–33125 Filed 12–31–96; 8:45 am]

BILLING CODE 8150–01–P

DEPARTMENT OF COMMERCE

National Institute of Standards and Technology

[Docket No. 960924272–6272–01]

RIN 0693–ZA13

Announcing Development of a Federal Information Processing Standard for Advanced Encryption Standard

AGENCY: National Institute of Standards and Technology (NIST), Commerce.

ACTION: Notice; Request for comments.

SUMMARY: A process to develop a Federal Information Processing Standard (FIPS) for Advanced Encryption Standard (AES) incorporating an Advanced Encryption Algorithm (AEA) is being initiated by the National Institute of Standards and Technology (NIST). As the first step in this process, draft minimum acceptability requirements and draft criteria to evaluate candidate algorithms are being published for comment. Also announced for comment are draft submission requirements. An open, public workshop on the draft minimum acceptability requirements, evaluation criteria and submission requirements has also been scheduled. It is intended that the AES will specify an unclassified, publicly disclosed encryption algorithm capable of protecting sensitive government information well into the next century.

The purpose of this notice is to solicit views from the public, manufacturers, voluntary standards organizations, and Federal, state, and local government users so that their needs can be considered in the process of developing the AES.

DATES: Comments must be received on or before April 2, 1997.

The AES Evaluation Criteria/Submission Requirements Workshop will be held on April 15, 1997, from 9:00 a.m. to 4:00 p.m.

ADDRESSES: Written comments should be sent to Director, Computer Systems Laboratory, Attn: FIPS for AES Comments, Technology Building, Room A231, National Institute of Standards and Technology, Gaithersburg, MD 20899.

Electronic comments may be sent to AES@nist.gov.

Comments received in response to this notice will be made part of the public record and will be made available for inspection and copying in the Central Records and Reference Inspection Facility, Room 6020, Herbert C. Hoover Building, 14th Street between Pennsylvania and Constitution Avenues, NW, Washington, DC, 20230.

The AES Criteria Workshop will be held at the Green Auditorium, Administration Building, National Institute of Standards and Technology, Gaithersburg, Maryland. Copies of the comments submitted will be available at the Workshop. For planning purposes, advance registration is encouraged. To register, please fax your name, address, telephone, fax and e-mail address to 301–948–1233 (Attn: AES Criteria Workshop) by April 10, 1997. Registration will also be available at the door. The workshop will be open to the public.

FOR FURTHER INFORMATION CONTACT: Edward Roback, National Institute of Standards and Technology, Building 820, Room 426, Gaithersburg, MD 20899; telephone 301–975–3696 or via fax at 301–948–1233. Technical inquiries regarding the proposed draft evaluation criteria and draft submission requirements should be addressed to Miles Smid, National Institute of Standards and Technology, Building 820, Room 426, Gaithersburg, MD 20899; telephone 301–975–2938 or via fax at 301–948–1233.

SUPPLEMENTARY INFORMATION: This work effort is being initiated pursuant to NIST's responsibilities under the Computer Security Act of 1987, the Information Technology Management Reform Act of 1996, Executive Order 13011, and OMB Circular A–130.

NIST recognizes that many institutions, both within and outside the Federal Government, have considerable investments in their current installed base of encryption equipment implementing the Data Encryption Algorithm, specified in the Data Encryption Standard (DES, Federal Information Processing Standard 46–2). DES was first approved in 1977 and was most recently reaffirmed by the Secretary in 1993, until December 1998. In 1993 the following statement was included in the standard:

''At the next review (1998), the algorithm specified in this standard will be over twenty years old. NIST will consider alternatives which offer a higher level of security. One of these alternatives may be proposed as a replacement standard at the 1998 review.''

It is NIST's review that a multi-year transition period will be necessary to move toward any new encryption standard and that DES will continue to be of sufficient strength for many applications. NIST will consult with all interested parties so that a smooth transition can be accomplished.

In order to provide a basis for the evaluation of encryption algorithms submitted to be considered as the AEA for incorporation into the FIPS for AES, evaluation criteria will be used to review submitted algorithms. Comments on the draft criteria (and, at the appropriate time, or candidate algorithms) from voluntary consensus standards organizations are particularly encouraged.

Proposed Draft Minimum Acceptability Requirements and Evaluation Criteria

The draft minimum acceptability requirements and evaluation criteria are:

A.1 AES shall be publicly defined.

A.2 AES shall be a symmetric block cipher.

A.3 AES shall be designed so that the key length may be increased as needed.

A.4 AES shall be implementable in both hardware and software.

A.5 AES shall either be (a) freely available or (b) available under terms consistent with the American National Standards Institute (ANSI) patent policy.

A.6 Algorithms which meet the above requirements will be judged based on the following factors:

(a) Security (i.e., the effort required to cryptanalyze),

(b) Computational efficiency,

(c) Memory requirements,

(d) Hardware and software suitability,

(e) Simplicity,

(f) Flexibility, and

(g) Licensing requirements.

Comments are being sought on these draft minimum acceptability criteria and evaluation criteria, suggestions for other criteria, and relative importance of each individual criterion in the evaluation process. Criteria will be finalized by NIST following the criteria workshop.

Proposed Draft Submission Requirements

In order to provide for an orderly, fair, and timely evaluation of candidate algorithm proposals, submission requirements will specify the procedures and supporting documentation necessary to submit a candidate algorithm.

B.1 A complete written specification of the algorithm including all necessary mathematical equations, tables, and parameters needed to implement the algorithm.

B.2 Software implementation and source code, in ANSI C code, which will compile on a personal computer. This code will be used to compare software performance and memory requirements with respect to other algorithms.

B.3 Statement of estimated computational efficiency in hardware and software.

B.4 Encryption example mapping a specified plaintext value into ciphertext.

B.5 Statement of licensing requirements and patents which may be infringed by implementations of this algorithm.

B.6 An analysis of the algorithm with respect to known attacks.

B.7 Statement of advantages and limitations of the submitted algorithm.

(end of draft submission requirements)

Since both the evaluation criteria and submission requirements have not yet been set, candidate algorithms should NOT be submitted at this time.

Dated: December 16, 1996.

Samuel Kramer,

Associate Director.

[FR Doc. 96–32494 Filed 12–31–96; 8:45 am]

BILLING CODE 3510–CN–M

National Oceanic and Atmospheric Administration

[Docket No. 960322092–6367–04; I.D. 122696A]

RIN 0648–ZA19

Gulf of Mexico Sustainable Fisheries Program

AGENCY: National Marine Fisheries Service (NMFS), National Oceanic and Atmospheric Administration (NOAA), Commerce.

ACTION: Notice; request for comments.

SUMMARY: Pursuant to the Interjurisdictional Fisheries Act of 1986 (IFA), the Secretary of Commerce (Secretary) declared fishery resource disasters in the Northeast, Northwest, and the Gulf of Mexico (Gulf) on August 2, 1995. Emergency aid totaling $15 million was made available for the Gulf, $5 million of which has been committed for financial assistance to commercial fishermen who suffered uninsured fishing vessel or gear damage or loss caused by hurricanes, floods, or their aftereffects that occurred from August 22, 1992, through December 31, 1995. NMFS now proposes to allocate the remaining $10 million to the five Gulf states' fisheries resources agencies for projects or other measures designed to alleviate the long-term effects of the disasters on the Gulf's fishery resources and associated habitat. Pursuant to the IFA, NMFS must provide notice and an opportunity for public comment on any terms, limitations, and conditions that are established as prerequisites for receiving IFA Federal assistance funds. This notice describes those terms, limitations, and conditions, and requests public comment.

DATES: Comments must be submitted on or before January 30, 1997.

ADDRESSES: Comments regarding this proposed program should be sent to the National Marine Fisheries Service, Southeast Region, 9721 Executive Center Drive, St. Petersburg, FL 33702–2432.

FOR FURTHER INFORMATION CONTACT: Buck Sutter, (813) 570–5324.

SUPPLEMENTARY INFORMATION:

Background

On August 2, 1995, the Secretary declared fishery resource disasters in the Pacific Northwest, New England, and the Gulf. With respect to the Gulf, the Secretary's disaster declaration (Declaration) cited multiple impacts. Non-point source nutrients and debris entering the Gulf as a result of the Mississippi River floods in 1993 and 1994 caused severe hypoxia, a condition where the excess nutrients react to deplete the water of necessary oxygen, which spread to massive areas in the Gulf and threatened marine life and coastal resources. The flood debris created underwater hazards for commercial fishermen who suffered damaged or lost gear and vessels. In addition, the Secretary cited hurricanes that harmed fisheries habitat and engendered substantial economic damage and social disruption. Because of these impacts, the Secretary made $15 million available for the Gulf of Mexico for disaster relief.

On June 10, 1996, NMFS published a final notice describing the Gulf of Mexico Fisheries Disaster Program (FDP), which committed up to $5 million of the available $15 million for direct grants to commercial fishermen who suffered uninsured fishing vessel or gear damage or loss caused by the hurricanes, floods, or their aftereffects (61 FR 29350, June 10, 1996; 61 FR 55132, Oct. 24, 1996).

Section 308(d) of the IFA allows the Secretary to help persons engaged in commercial fisheries by providing assistance indirectly through state and local government agencies. Therefore, the Secretary proposes to use the remaining $10 million in Gulf disaster assistance for projects or other measures to alleviate the long-term impacts on Gulf fishery resources and associated habitat from conditions cited in the August 2, 1995, Declaration. Because the impacts varied from state to state, a determination has been made to provide this assistance through the five Gulf state fisheries resources agencies, as they are in the best position to determine how the funds can be used.

This notice proposes the criteria that will be used by NOAA to fund state disaster assistance proposals and provides opportunity for public comment. NMFS will publish a final notice that will address public comments submitted on this notice and establish the final criteria for the state grants. States will also be notified and required to comply with all existing Federal assistance requirements. Once NMFS determines that a state's proposal(s) complies with all applicable terms, limitations, and conditions, NMFS will enter into a financial assistance agreement with that state for the administration of each project.

After consultations with appropriate state officials and review of available information regarding the impacts of disasters that occurred from August 23, 1992, through December 31, 1995, NMFS has decided upon the following apportionment of funds: Alabama—$1 million; Florida—$2.25 million; Louisiana—$4.5 million; Mississippi—$1 million; and Texas—$1.25 million.

I. Criteria

In order to be considered for funding, a state proposal must adhere to the following criteria:

1. The proposed project(s) must be consistent with the original intent of the Secretary's disaster declaration and the IFA (i.e., each project must address conditions resulting from nutrients and debris entering the Gulf as a result of floods and/or hurricanes or hurricane-strength storms from August 23, 1992, through December 31, 1995).

2. Projects must address the long-term benefit of the fishery resource and associated habitat and must seek to create healthy, sustainable fisheries in the Gulf of Mexico.

3. Projects must not duplicate existing Federal, state, or local projects. However, they may augment or allow the maintenance of effort of existing projects, provided that those projects are consistent with all other criteria. In other words, separate funds may be used to maintain existing projects.

4. Projects that primarily involve new data collection must show a clear relationship between that project and

long-term benefits to the fishery resource that are attainable without additional funding. A new data collection project that would not provide sufficient useful information to help Gulf fisheries unless the project received additional funding would not qualify under this program.

Projects that would qualify under these criteria might include restoration/development of hurricane or flood-damaged habitat, enhancement of stocks that declined due to hypoxia or habitat loss, or fishing capacity reduction projects to alleviate the excess capacity targeting the depleted stocks and to mitigate the financial harm suffered by fishermen who targeted these stocks.

II. Determinations and Administration

All state grant proposals will be reviewed by the Department of Commerce, NOAA, and NMFS. Final project selections will be made by NMFS ensuring that there is no duplication with other projects funded by NOAA or other Federal organizations. If a proposal is accepted, NOAA will enter into a financial assistance agreement with the submitting state.

Catalogue of Federal Domestic Assistance

The Program is listed in the ''Catalogue of Federal Domestic Assistance'' under No. 11.452, Unallied Industry Projects.

Classification

This proposed program has been determined to be not significant for the purposes of E.O. 12866. The Assistant General Counsel for Legislation and Regulation of the Department of Commerce certified to the Chief Counsel for Advocacy of the Small Business Administration as follows:

I certify that this notice would not have a significant economic impact on a substantial number of small entities. Pursuant to this program, a total of $10 million will be divided among five states to design a program of assistance to eligible industry participants. As each state has flexibility to design its own implementation of the program, the funds to be allocated to each state are likely to be spent on numerous varied projects. Some projects might provide direct financial benefits to fishermen while other projects might involve environmental restoration and research, which are designed to benefit the fishery directly, and only indirectly benefit fishermen. Given the extensive universe of potential applicants, the limited funds available, and the wide range of potential projects, it is unlikely that 20 percent or more of the industry will be affected to an extent in excess of 5 percent of gross revenues. As the program is meant to benefit the industry, it is also unlikely that the action will precipitate a 10 percent increase in compliance cost for 20 percent or more of industry participants, or cause 2 percent of fishery participants to cease operations.

Therefore, an initial Regulatory Flexibility Act analysis was not prepared.

Authority: Public Law 99–659 (16 U.S.C. 4107 *et seq.*); Public Law 102–396; Public Law 104–134.

Dated: December 26, 1996.

Gary C. Matlock,

Director, Office of Sustainable Fisheries, National Marine Fisheries Service.

[FR Doc. 96–33368 Filed 12–31–96; 8:45 am]

BILLING CODE 3510–22–P

DEPARTMENT OF ENERGY

Federal Energy Regulatory Commission

[Docket No. RP97–198–000]

Gulf States Transmission Corporation; Notice of Proposed Changes in FERC Gas Tariff

December 26, 1996.

Take notice that on December 20, 1996, Gulf States Transmission Corporation (GSTC) tendered for filing as part of its FERC Gas Tariff, Original Volume No. 1, certain pro forma tariff sheets to be effective January 1, 1997.

GSTC states that the purpose of the filing is to reflect changes to comply with Order No. 582, issued September 28, 1995 in Docket No. RM95–3–000.

GSTC states that copies of the filing are being mailed to its jurisdictional customers and interested state regulatory agencies.

Any person desiring to be heard or to protest said filing should file a motion to intervene or protest with the Federal Energy Regulatory Commission, 888 First Street, N.E., Washington, D.C. 20426, in accordance with Sections 385.214 and 385.211 of the Commission's Rules and Regulations. All such motions or protests must be filed in accordance with Section 154.210 of the Commission's Regulations. Protests will be considered by the Commission in determining the appropriate action to be taken, but will not serve to make protestants parties to the proceeding. Any person wishing to become a party must file a motion to intervene. Copies of this filing are on file with the Commission and are available for public inspection in the Public Reference Room.

Lois D. Cashell,

Secretary.

[FR Doc. 96–33321 Filed 12–31–96; 8:45 am]

BILLING CODE 6717–01–M

[Project Nos. 503, 1971, 1975, 2061, 2726, 2777, 2778—Idaho]

Idaho Power Company; Notice of Public Meeting

December 26, 1996.

On Tuesday, February 4, 1997, in Boise, Idaho, the Federal Energy Regulatory Commission staff will host a public meeting to solicit input from federal and state agencies, Indian tribes, non-governmental organizations, and the public on how the Commission should conduct the cumulative effects analysis for the relicensing of eight of the Idaho Power Company's Snake River hydroelectric projects.

The eight projects are: Bliss (P–1975), Lower Salmon Falls (P–2061), Upper Salmon Falls (P–2777), Shoshone Falls (P–2778), C.J. Strike (P–2055), Upper and Lower Malad (P–2726), Hells Canyon (P–1971), and Swan Falls (P–503). These projects, located on a 360-mile-long reach of the mainstem Snake River in Idaho, have existing licenses that will expire between December 1997 and June 2010.

The meeting will be held at: Boise Centre on the Grove, 850 W. Front Street, Waters Room, 10:00 a.m. to 4:00 p.m.

The meeting will be recorded by a court reporter.

To help focus discussions at the public meeting, the Commission will mail a discussion paper titled ''*Approaches to Cumulative Analysis for the Snake River Basin Relicensing,*'' to all entities on the Snake River Relicensing Collaborative Team mailing list and the Bliss, Lower Salmon Falls, and Upper Salmon Falls Projects mailing list. Copies of the discussion paper will also be available at the public meeting.

For further information please contact Mr. Alan Mitchnick at (202) 219–2826.

Lois D. Cashell,

Secretary.

[FR Doc. 96–33322 Filed 12–31–96; 8:45 am]

BILLING CODE 6717–01–M

[Docket No. ER96–3099–000]

Midwest Energy, Inc.; Notice of Filing

December 26, 1996.

Take notice that on November 27, 1996, Midwest Energy, Inc. (Midwest),

tendered for filing an Amended Energy Purchase Agreement for Market Based Sales Service between Midwest and the City of Colby, Kansas.

Midwest states that it is serving copies of the instant filing to its customers, State Commissions and other interested parties.

Any person desiring to be heard or to protest said filing should file a motion to intervene or protest with the Federal Energy Regulatory Commission, 888 First Street, N.E., Washington, D.C. 20426, in accordance with Rules 211 and 214 of the Commission's Rules of Practice and Procedure (18 CFR 385.211 and 18 CFR 385.214). All such motions or protests should be filed on or before December 30, 1996. Protests will be considered by the Commission in determining the appropriate action to be taken, but will not serve to make protestants parties to the proceeding. Any person wishing to become a party must file a motion to intervene. Copies of this filing are on file with the Commission and are available for public inspection.

Lois D. Cashell,

Secretary.

[FR Doc. 96–33342 Filed 12–31–96; 8:45 am]

BILLING CODE 6717–01–M

[Docket Nos. RP95–271–008 and RP94–227–008]

Transwestern Pipeline Company; Notice of Refund Report

December 26, 1996.

Take notice that on December 20, 1996 Transwestern Pipeline Company (Transwestern) tendered for filing a Report of Refunds showing refunds that were made to Transwestern's customers on December 2, 1996 pursuant to Section 1 of the Stipulation and Agreement (Settlement) filed in the referenced docket on May 21, 1996, and approved by the Commission on October 16, 1996.

Transwestern states that copies of the filing were served on its gas utility customers, interested state commissions, and all parties to this proceeding.

Any person desiring to protest said filing should file a protest with the Federal Energy Regulatory Commission, 888 First Street, N.E., Washington, D.C., 20426, in accordance with Rule 211 of the Commission's Rules of Practice and Procedure. All such motions or protests should be filed on or before January 2, 1997. Protests will be considered by the Commission in determining the appropriate action to be taken, but will not serve to make protestants parties to the proceeding. Copies of this filing are on file with the Commission and are available for public inspection.

Lois D. Cashell,

Secretary.

[FR Doc. 96–33323 Filed 12–31–96; 8:45 am]

BILLING CODE 6717–01–M

[Docket No. ER97–788–000, et al.]

Wisconsin Public Service Corporation, et al.; Electric Rate and Corporate Regulation Filings

December 24, 1996.

Take notice that the following filings have been made with the Commission:

1. Wisconsin Public Service Corporation

[Docket No. ER97–788–000]

Take notice that on December 13, 1996, Wisconsin Public Service Corporation (WPSC), tendered for filing an executed Transmission Service Agreement between WPSC and Western Resources. The Agreement provides for transmission service under the Open Access Transmission Service Tariff, FERC Original Volume No. 11.

Comment date: January 7, 1997, in accordance with Standard Paragraph E at the end of this notice.

2. Wisconsin Public Service Corporation

[Docket No. ER97–789–000]

Take notice that on December 13, 1996, Wisconsin Public Service Corporation (WPSC), tendered for filing an executed Transmission Service Agreement between WPSC and Wisconsin Power & Light Company. The Agreement provides for transmission service under the Open Access Transmission Service Tariff, FERC Original Volume No. 11.

Comment date: January 7, 1997, in accordance with Standard Paragraph E at the end of this notice.

3. Boston Edison Company

[Docket No. ER97–790–000]

Take notice that on December 13, 1996, Boston Edison Company (Boston Edison), tendered for filing a Service Agreement under Original Volume No. 8, FERC Order 888 Tariff (Tariff) for The Power Company of America, LP (The Power Company). Boston Edison requests that the Service Agreement become effective as of December 1, 1996.

Edison states that it has served a copy of this filing on The Power Company and the Massachusetts Department of Public Utilities.

Comment date: January 7, 1997, in accordance with Standard Paragraph E at the end of this notice.

4. Pennsylvania Power & Light Company

[Docket No. ER97–791–000]

Take notice that on December 13, 1996, Pennsylvania Power & Light Company (PP&L), filed a Service Agreement dated December 9, 1996, with Sonat Power Marketing L.P. (Sonat) under PP&L's FERC Electric Tariff, Original Volume No. 1. The Service Agreement adds Sonat as an eligible customer under the Tariff.

PP&L requests an effective date of December 13, 1996, for the Service Agreement.

PP&L states that copies of this filing have been supplied to Sonat and to the Pennsylvania Public Utility Commission.

Comment date: January 7, 1997, in accordance with Standard Paragraph E at the end of this notice.

5. Portland General Electric Company

[Docket No. ER97–792–000]

Take notice that on December 13, 1996, Portland General Electric Company (PGE), tendered for filing under PGE's Final Rule pro forma tariff (FERC Electric Tariff Original Volume No. 8, Docket No. OA96–137–000), an executed Service Agreement for Firm Point-to-Point Transmission Service with Aquila Power Corporation.

Pursuant to 18 CFR 35.11, PGE respectfully requests the Commission grant a waiver of the notice requirements of 18 CFR 35.3 to allow the Service Agreements to become effective December 6, 1996.

A copy of this filing was caused to be served upon Aquila Power Corporation as noted in the filing letter.

Comment date: January 7, 1997, in accordance with Standard Paragraph E at the end of this notice.

6. Louisville Gas and Electric Company

[Docket No. ER97–793–000]

Take notice that on December 16, 1996, Louisville Gas and Electric Company (LG&E), tendered for filing a copy of a Non-Firm Point-to-Point Transmission Service Agreement between Louisville Gas and Electric Company and Entergy Services, Inc. under LG&E's Open Access Transmission Tariff.

Comment date: January 7, 1997, in accordance with Standard Paragraph E at the end of this notice.

7. Louisville Gas and Electric Company

[Docket No. ER97–794–000]

Take notice that on December 16, 1996, Louisville Gas and Electric Company, tendered for filing copies of a service agreement between Louisville Gas and Electric Company and PanEnergy Power Services under Rate GSS.

Comment date: January 7, 1997, in accordance with Standard Paragraph E at the end of this notice.

8. Louisville Gas and Electric Company

[Docket No. ER97–795–000]

Take notice that on December 16, 1996, Louisville Gas and Electric Company (LG&E), tendered for filing a copy of a Non-Firm Point-to-Point Transmission Service Agreement between Louisville Gas and Electric Company and Wisconsin Electric Power Company under LG&E's Open Access Transmission Tariff.

Comment date: January 7, 1997, in accordance with Standard Paragraph E at the end of this notice.

9. Louisville Gas and Electric Company

[Docket No. ER97–796–000]

Take notice that on December 16, 1996, Louisville Gas and Electric Company (LG&E), tendered for filing a copy of a Non-Firm Point-to-Point Transmission Service Agreement between Louisville Gas and Electric Company and Wabash Valley Power Association under LG&E's Open Access Transmission Tariff.

Comment date: January 7, 1997, in accordance with Standard Paragraph E at the end of this notice.

10. Louisville Gas and Electric Company

[Docket No. ER97–797–000]

Take notice that on December 16, 1996, Louisville Gas and Electric Company (LG&E), tendered for filing a copy of a Non-Firm Point-to-Point Transmission Service Agreement between Louisville Gas and Electric Company and Cinergy Services, Inc. under LG&E's Open Access Transmission Tariff.

Comment date: January 7, 1997, in accordance with Standard Paragraph E at the end of this notice.

11. Louisville Gas and Electric Company

[Docket No. ER97–798–000]

Take notice that on December 16, 1996, Louisville Gas and Electric Company (LG&E), tendered for filing a copy of a Non-Firm Point-to-Point Transmission Service Agreement between Louisville Gas and Electric Company and American Electric Power Service Corporation under LG&E's Open Access Transmission Tariff.

Comment date: January 7, 1997, in accordance with Standard Paragraph E at the end of this notice.

12. Central Illinois Public Service Company

[Docket No. ER97–799–000]

Take notice that on December 16, 1996, Central Illinois Public Service Company (CIPS), submitted nineteen service agreements, dated between November 1, 1996 and December 16, 1996, establishing the following as customers under the terms of CIPS' Open Access Transmission Tariff: AES Power, Inc., American Electric Power Services Corp., Carolina Power & Light Co., Central Illinois Light Co., Cinergy Services, Inc., Duke/Louis Dreyfus L.L.C., Engelhard Power Marketing, Illinois Power Co., Illinova Power Marketing Division, Jpower, Inc., Kentucky Utilities Co., Koch Power Services, Inc., MidCon Power Services Corp., QST Energy Trading Inc., Tennessee Power Co., Virginia Electric and Power Co., Western Resources, Wisconsin Electric Power Co. and Wisconsin Power and Light Co.

CIPS requests an effective date of November 16, 1996 for these service agreements. Accordingly, CIPS requests waiver of the Commission's notice requirements. Copies of this filing were served upon the foregoing customers and the Illinois Commerce Commission.

Comment date: January 7, 1997, in accordance with Standard Paragraph E at the end of this notice.

13. Montaup Electric Company

[Docket No. ER97–800–000]

Take notice that on December 16, 1996, Montaup Electric Company (Montaup), filed (1) executed unit sales service agreements under Montaup FERC Electric Tariff, Original Volume No. III; and (2) executed service agreements for the sale of system capacity and associated energy under Montaup's FERC electric tariff, Original Volume No. IV. The service agreements under both tariff are between Montaup and following companies (buyers):

1. TransCanada Power Corp. (TPC)
2. PanEnergy Power Services, Inc. (PTMS)
3. Eastern Power Distribution, Inc. (EPD)
4. Federal Energy Sales, Inc. (FES)
5. Coral Power, L.L.C. (CORAL)
6. Equitable Power Sources Company (EPSC)
7. Baltimore Gas & Electric Co. (BG&E)
8. Southern Energy Marketing, Inc. (Southern Energy)
9. CPS Utilities (CPS)

Montaup requests a waiver of the sixty-day notice requirement so that the service agreements may become effective as of December 16, 1996. No transactions have occurred under any of the agreements.

Comment date: January 7, 1997, in accordance with Standard Paragraph E at the end of this notice.

14. Entergy Services, Inc.

[Docket No. ER97–801–000]

Take notice that on December 16, 1996, Entergy Services, Inc. (Entergy Services), on behalf of Entergy Arkansas, Inc., Entergy Gulf States, Inc., Entergy Louisiana, Inc., Entergy Mississippi, Inc., and Entergy New Orleans, Inc. (collectively, the Entergy Operating Companies), tendered for filing a Non-Firm Point-to-Point Transmission Service Agreement between Entergy Services, as agent for the Entergy Operating Companies, and Electric Clearinghouse, Inc. (ECT).

Comment date: January 7, 1997, in accordance with Standard Paragraph E at the end of this notice.

15. Wisconsin Power and Light Company

[Docket No. ER97–802–000]

Take notice that on December 16, 1996, Wisconsin Power and Light Company (WP&L), tendered for filing a Form of Service Agreement for Non-Firm Point-to-Point Transmission Service establishing Western Resources as a point-to-point transmission customer under the terms of WP&L's Transmission Tariff.

WP&L requests an effective date of December 5, 1996, and accordingly seeks waiver of the Commission's notice requirements. A copy of this filing has been served upon the Public Service Commission of Wisconsin.

Comment date: January 7, 1997, in accordance with Standard Paragraph E at the end of this notice.

16. Central Vermont Public Service Corporation

[Docket No. ER97–803–000]

Take notice that on December 16, 1996, Central Vermont Public Service Corporation (Central Vermont), tendered for filing an amendment to its FPC Rate Schedule 29, Supplement 2 which tracks a retail rate increase approved by the Vermont Public Service Board.

Central Vermont requests the Commission to waive its notice of filing requirement to permit the amendment to become effective according to its terms. In support of its request Central Vermont states that allowing the amendment to become effective as provided will enable the Company and its customers to achieve mutual benefits.

Comment date: January 7, 1997, in accordance with Standard Paragraph E at the end of this notice.

17. Florida Power & Light Company

[Docket No. ER97–804–000]

Take notice that on December 16, 1996, Florida Power & Light Company (FPL), filed the Contract for Purchases and Sales of Power and Energy between FPL and Coral Power L.L.C. FPL requests an effective date of December 20, 1996.

Comment date: January 7, 1997, in accordance with Standard Paragraph E at the end of this notice.

Standard Paragraph

E. Any person desiring to be heard or to protest said filing should file a motion to intervene or protest with the Federal Energy Regulatory Commission, 888 First Street, N.E., Washington, D.C. 20426, in accordance with Rules 211 and 214 of the Commission's Rules of Practice and Procedure (18 CFR 385.211 and 18 CFR 385.214). All such motions or protests should be filed on or before the comment date. Protests will be considered by the Commission in determining the appropriate action to be taken, but will not serve to make protestants parties to the proceeding. Any person wishing to become a party must file a motion to intervene. Copies of this filing are on file with the Commission and are available for public inspection.

Lois D. Cashell,

Secretary.

[FR Doc. 96–33320 Filed 12–31–96; 8:45 am]

BILLING CODE 6717–01–P

[Docket Nos. CP95–194–001, CP95–194–003, CP96–027–000, and CP96–027–001]

Northern Border Pipeline Company; Natural Gas Pipeline Company of America; Notice of Availability of the Draft Environmental Impact Statement for the Proposed Northern Border Project and Notice of Public Meetings

December 26, 1996.

The staff of the Federal Energy Regulatory Commission (FERC or Commission) has prepared a draft environmental impact statement (DEIS) on the natural gas pipeline facilities proposed by Northern Border Pipeline Company (Northern Border) and Natural Gas Pipeline Company of America (Natural) in the above-referenced dockets, collectively referred to as the Northern Border Project.

The DEIS was prepared to satisfy the requirements of the National Environmental Policy Act. The staff concludes that approval of the proposed project, with appropriate mitigating measures, would have limited environmental impact.

The DEIS assesses the potential environmental effects of the construction and operation of the following facilities:

Northern Border

- About 390.0 miles of new natural gas pipeline;
- About 303,500 horsepower (hp) of new compression;
- 9 new and 1 modified meter stations, 5 new pig launcher/receivers, 1 new office/warehouse building, and 16 new and 9 modified valves; and
- 13 new communication towers.

Natural

- About 85.7 miles of new natural gas pipeline;
- About 9,000 hp of new compression; and
- 3 new pig launcher/receivers and 17 new or modified valves.

The purpose of the proposed facilities would be to transport up to 1,226.3 million cubic feet per day of natural gas from producing regions in Canada and the Williston Basin in Montana and North Dakota to natural gas shippers and local distribution companies in the Midwest, primarily the Chicago area.

Specific Comment Request

The staff has identified and evaluated two system alternatives to the proposed combined facilities between Harper, Iowa and Chicago, Illinois, the Amarillo and Iowa/Illinois System Alternatives. To assist the staff in its evaluation of the system alternatives, we request specific comments on the impacts and benefits of using each of the alternatives as compared to the applicants' proposals. Area residents, local or state governments, and Northern Border and Natural are asked to comment on whether the Amarillo and/or the Iowa/Illinois System Alternatives are reasonable and practical and preferable to the combined proposed facilities between Harper and Chicago. Comments should also specifically address any impacts on project timing and related costs/benefits.

Comment Procedure

Written Comments

Any person wishing to comment on the DEIS may do so. Written comments must be received on or before February 18, 1997, reference Docket No. CP95–194–001, and be addressed to: Office of the Secretary, Federal Energy Regulatory Commission, 888 First Street, N.E., Washington, DC 20426.

A *copy* of the written comments should also be sent to the FERC Project Manager identified below.

Public Meeting Schedule

Three public meetings to receive comments on the DEIS will be held at the following times and locations:

Date	Time	Location
Feb. 4, 1997	7:00 p.m ..	Channahon, IL.
Feb. 5, 1997	7:00 p.m ..	Princeton, IL.
Feb. 6, 1997	7:00 p.m ..	Walcott, IA.

The meeting in Channahon, Illinois will be held at the Channahon Junior High School. The meeting in Princeton, Illinois will be held at the Bureau County Metro Center. The meeting in Walcott, Iowa will be held at the American Legion.

Interested groups and individuals are encouraged to attend and present oral comments on the environmental impacts described in the DEIS. Anyone who would like to speak at the public meetings may get on the speakers list by contacting the FERC Project Manager or signing-up at the public meetings. Priority will be given to persons representing groups. Transcripts will be made of the meetings.

After these comments are reviewed, any significant new issues are investigated, and modifications are made to the DEIS, a final environmental impact statement (FEIS) will be published and distributed. The FEIS will contain the staff's responses to timely comments received on the DEIS.

Comments will be considered by the Commission but will not serve to make the commentor a party to the proceeding. Any person seeking to become a party to the proceeding must file a motion to intervene pursuant to Rule 214 of the Commission's Rules of Practice and Procedures (18 CFR 385.214).

The date for filing timely motions to intervene in this proceeding has passed. therefore, parties now seeking to file late interventions must show good cause, as required by section 385.214(b)(3), why this time limitation should be waived. Environmental issues have been viewed as good cause for late intervention. You do not need intervenor status to have your comments considered.

The DEIS has been placed in the public files of the FERC and is available for public inspection at: Federal Energy Regulatory Commission, Public Reference and Files Maintenance Branch, 888 First street, N.E., Washington, DC 20426, (202) 208–1371.

Copies of the DEIS have been mailed to federal, state, and local agencies,

public interest groups, interested individuals, newspapers, and parties to this proceeding.

For additional procedural information or a limited number of copies of this DEIS contact: Ms. Laura Turner, Environmental Project Manager, Environmental Review and Compliance Branch II, Office of Pipeline Regulation, 888 First Street, N.E., RM 7M–02, Washington, DC 20426, (202) 208–0916.

Lois D. Cashell,

Secretary.

[FR Doc. 96–33324 Filed 12–31–96; 8:45 am]

BILLING CODE 6717–01–M

ENVIRONMENTAL PROTECTION AGENCY

[OPP–30072M; FRL–5579–1]

Pesticide Tolerance Processing Fees Deposit Fund

AGENCY: Environmental Protection Agency.

ACTION: Notice.

SUMMARY: EPA announces that, as a result of the passage of the Food Quality Protection Act on August 3, 1996, all fees related to pesticide tolerance activities are being deposited in the Reregistration and Expedited Processing Fund. The current fee schedule for tolerance activities has not been changed.

EFFECTIVE DATE: January 2, 1997.

FOR FURTHER INFORMATION CONTACT: By mail: Iantha Gilmore, Resource Management Staff, Office of Pesticide Programs (7501C), Environmental Protection Agency, 401 M St., SW., Washington, DC 20460. Office Location and telephone number: Room 700-D, CM #2, 1921 Jefferson Davis Highway, Arlington, Virginia, (703–305–6127); e-mail: gilmore.iantha@epamail.epa.gov.

SUPPLEMENTARY INFORMATION: In accordance with section 408(m) of the Federal, Food, Drug, and Cosmetic Act (FFDCA), as amended by the Food Quality Protection Act of August 3, 1996, the EPA announces that all fees related to tolerance activities collected under 40 CFR 180.33 are, as of the date of this notice, being deposited in the Reregistration and Expedited Processing Fund.

The current tolerance fee regulations (40 CFR 180.33) were promulgated under the former section 408(o) of the FFDCA and were deposited to the Tolerance Fee Fund. The new section 408(m) uses almost identical language to that used in the earlier section 408(o), except that section 408(m) specifies that tolerance fees are to be deposited into the Reregistration and Expedited Processing Fund. Because the two sections are otherwise nearly identical, tolerance fees will continue for now to be subject to the existing fee schedule in 40 CFR 180.33.

EPA anticipates that this fee schedule will be sufficient to provide, equip, and maintain an adequate tolerance assessment program over the short term. For the longer term, EPA is currently engaged in a public process to determine how best to implement all the provisions of the new FFDCA section 408. If, at the completion of this process, EPA concludes that any changes in EPA's tolerance assessment program requires a change in the existing tolerance fee structure, EPA will revise the fee schedule accordingly.

Until the above public process is completed, the current procedure for increasing the fee structure to reflect the annual increase for civilian Federal General Schedule (GS) employees working in the Washington, DC/Baltimore, MD metropolitan area will continue. When these automatic adjustments are made, a new fee schedule will be published as a final rule in the Federal Register to become effective 30 days or more after publication.

In the meantime, all deposits and fees required by the regulations in 40 CFR part 180 must be paid by money order, bank draft, or certified check drawn to the order of the Environmental Protection Agency. All deposits and fees must be forwarded to the Environmental Protection Agency, Headquarters Accounting Operations Branch, Office of Pesticide Programs (Tolerance Fees), P. O. Box 360277M, Pittsburgh, PA 15251. The payments should be labeled ''Tolerance Petition Fees'' and should be accompanied only by a copy of the letter or petition requesting the tolerance.

The actual letter or petition along with supporting data, shall be forwarded within 30 days of payment to the Environmental Protection Agency, Office of Pesticide Programs, Registration Division, (7505C) Washington, DC 20460. A petition will not be accepted for processing until the required fees have been submitted. A petition for which a waiver of fees has been requested will not be accepted for processing until the fee has been waived or, if the waiver has been denied, the proper fee is submitted after notice of denial. A request for waiver or refund will not be accepted after scientific review has begun on a petition.

Dated: December 19, 1996.

Lynn R. Goldman,

Assistant Administrator for Prevention, Pesticides and Toxic Substances.

[FR Doc. 96–33298 Filed 12–31–96; 8:45 am]

BILLING CODE 6560–50–F

[FRL–5673–3]

Proposed Settlement Under Section 122(h) of the Comprehensive Environmental Response, Compensation and Liability Act

AGENCY: Environmental Protection Agency.

ACTION: Notice of proposed administrative settlement and opportunity for public comment.

SUMMARY: The Environmental Protection Agency (EPA) is proposing to enter into an administrative settlement to resolve certain claims under the Comprehensive Environmental Response, Compensation and Liability Act of 1980, as amended (CERCLA). Notice is being published to inform the public of the proposed settlement and of the opportunity to comment. This settlement is intended to resolve the sole settling party's liability for certain response costs incurred by EPA at the Monroe Township Landfill Superfund Site in Monroe Township, New Jersey.

DATES: Comments must be provided on or before February 3, 1997.

ADDRESSES: Comments should be addressed to the U.S. Environmental Protection Agency, Office of Regional Counsel, 290 Broadway—17th Floor, New York, NY 10007, and should refer to: In the Matter of the Monroe Township Landfill Superfund Site: Browning-Ferris Industries of South Jersey, Inc., Settling Party, U.S. EPA Index No. II-CERCLA–96–0110.

FOR FURTHER INFORMATION CONTACT: U.S. Environmental Protection Agency, Office of Regional Counsel, 290 Broadway—17th Floor, New York, NY 10007; Attention: William C. Tucker, Esq. (212) 637–3139.

SUPPLEMENTARY INFORMATION: In accordance with Section 122(i)(1) of CERCLA, notice is hereby given of a proposed administrative settlement concerning the Monroe Township Landfill Superfund Site located in Monroe Township, New Jersey. Section 122(h) of CERCLA provides EPA with authority to consider, compromise and settle certain claims for costs incurred by the United States.

Browning-Ferris Industries of South Jersey, Inc. will pay a total of $100,000 under the settlement to reimburse EPA

for certain response costs incurred at the Monroe Township Landfill Superfund Site.

A copy of the proposed administrative settlement agreement, as well as background information relating to the settlement, may be obtained in person or by mail from the Office of Regional Counsel, EPA Region II, 290 Broadway—17th Floor, New York, NY 10007.

Dated: December 16, 1996.

Jeanne M. Fox,

Regional Administrator.

[FR Doc. 96–33345 Filed 12–31–96; 8:45 am]

BILLING CODE 6560–50–P

DEPARTMENT OF HEALTH AND HUMAN SERVICES

Administration for Children and Families

Submission for OMB Review; Comment Request

Title: Comprehensive Child Development Program Cohort 1 Longitudinal Follow Up Study.

OMB No: New Request.

Description: The purpose of this collection is to obtain longitudinal data from CCDP participant and control group families regarding the health and development of their children, economic and social well-being of the parents, and self-sufficiency of the family.

Respondents: CCDP participant and control group parents and children; teachers of CCDP participant and control group children; social and health services delivery personnel from each of the eight study sites.

Annual Burden Estimates:

Instrument	Number of respondents	Number of responses per respondent	Average burden hours per response	Total burden hours	
				1997	1999
Parent Interviews	1,325	1	2.08	2760	2760
Direct Child Assessments	1,325	1	0.58	0	773
Teacher Assessments	600	1	0.68	406	406
Service Delivery System Survey	40	1	0.42	17	17

Estimated Total Annual Burden Hours (1997): 3,183; (1999): 3,956.

Additional Information: Copies of the proposed collection of information may be obtained by writing to The Administration for Children and Families, Office of Information Services, Division of Information Resource Management Services, 370 L'Enfant Promenade, S.W., Washington, D.C. 20447, Attn: ACF Reports Clearance Officer.

OMB Comment: OMB is required to make a decision concerning the collection of information between 30 and 60 days after publication of this document in the Federal Register. Therefore, a comment is best assured of having its full effect if OMB receives it within 30 days of publication. Written comments and recommendations for the proposed information collection should be sent directly to the following: Office of Management and Budget, Paperwork Reduction Project, 725 17th Street, N.W., Washington, D.C. 20503, Attn: Ms. Wendy Taylor.

Dated: December 16, 1996.

Robert Sargis,

Acting Report Clearance Officer.

[FR Doc. 96–33346 Filed 12–31–96; 8:45 am]

BILLING CODE 4150–04–M

Food and Drug Administration

[Docket No. 96F–0489]

Ciba Specialty Chemicals Corp.; Filing of Food Additive Petition

AGENCY: Food and Drug Administration, HHS.

ACTION: Notice.

SUMMARY: The Food and Drug Administration (FDA) is announcing that Ciba Specialty Chemicals Corp. has filed a petition proposing that the food additive regulations be amended to provide for the safe use of 5,7-bis(1,1-dimethylethyl)-3-hydroxy-2(3H)-benzofuranone, reaction products with *o*-xylene as an antioxidant and/or stabilizer for olefin polymers intended for use in contact with food.

DATES: Written comments on the petitioner's environmental assessment by February 3, 1997.

ADDRESSES: Submit written comments to the Dockets Management Branch (HFA–305), Food and Drug Administration, 12420 Parklawn Dr., rm. 1–23, Rockville, MD 20857.

FOR FURTHER INFORMATION CONTACT: Vir D. Anand, Center for Food Safety and Applied Nutrition (HFS–216), Food and Drug Administration, 200 C St. SW., Washington, DC 20204, 202–418–3081.

SUPPLEMENTARY INFORMATION: Under the Federal Food, Drug, and Cosmetic Act (sec. 409(b)(5) (21 U.S.C. 348(b)(5))), notice is given that a food additive petition (FAP 7B4529) has been filed by Ciba Specialty Chemicals Corp., 540 White Plains Rd., Tarrytown, NY 10591–9005. The petition proposes to amend the food additive regulations in § 178.2010 *Antioxidants and/or stabilizers for polymers* (21 CFR 178.2010) to provide for the safe use of 5,7-bis(1,1-dimethylethyl)-3-hydroxy-2(3H)-benzofuranone, reaction products with *o*-xylene as an antioxidant and/or stabilizer for olefin polymers intended for use in contact with food.

The potential environmental impact of this action is being reviewed. To encourage public participation consistent with regulations promulgated under the National Environmental Policy Act (40 CFR 1501.4(b)), the agency is placing the environmental assessment submitted with the petition that is the subject of this notice on public display at the Dockets Management Branch (address above) for public review and comment. Interested persons may, on or before February 3, 1997, submit to the Dockets Management Branch (address above) written comments. Two copies of any comments are to be submitted, except that individuals may submit one copy. Comments are to be identified with the docket number found in brackets in the heading of this document. Received comments may be seen in the office above between 9 a.m. and 4 p.m., Monday through Friday. FDA will also place on public display any amendments to, or comments on, the petitioner's environmental assessment without further announcement in the

Federal Register. If, based on its review, the agency finds that an environmental impact statement is not required and this petition results in a regulation, the notice of availability of the agency's finding of no significant impact and the evidence supporting that finding will be published with the regulation in the Federal Register in accordance with 21 CFR 25.40(c).

Dated: December 5, 1996.

Alan M. Rulis,

Director, Office of Premarket Approval, Center for Food Safety and Applied Nutrition.

[FR Doc. 96–33343 Filed 12–31–96; 8:45 am]

BILLING CODE 4160–01–F

[Docket No. 96F–0493]

Gerard T. O'Brien; Filing of Food Additive Petition

AGENCY: Food and Drug Administration, HHS.

ACTION: Notice.

SUMMARY: The Food and Drug Administration (FDA) is announcing that Gerard T. O'Brien has filed a petition proposing that the food additive regulations be amended to provide for the safe use of a mixture of hydrogen peroxide and sodium bicarbonate as an antimicrobial agent on fresh poultry.

DATES: Written comments on the petitioner's environmental assessment by February 3, 1997.

ADDRESSES: Submit written comments to the Dockets Management Branch (HFA–305), Food and Drug Administration, 12420 Parklawn Dr., rm. 1–23, Rockville, MD 20857.

FOR FURTHER INFORMATION CONTACT: James C. Wallwork, Center for Food Safety and Applied Nutrition (HFS–217), Food and Drug Administration, 200 C St. SW., Washington, DC 20204–0001, 202–418–3078.

SUPPLEMENTARY INFORMATION: Under the Federal Food, Drug, and Cosmetic Act (sec. 409(b)(5) (21 U.S.C. 348(b)(5))), notice is given that a food additive petition (FAP 7A4530) has been filed by Gerard T. O'Brien, 2162 Skyline Dr., Gainesville, GA 30501. The petition proposes to amend the food additive regulations to provide for the safe use of a mixture of hydrogen peroxide and sodium bicarbonate as an antimicrobial agent on fresh poultry.

FAP 7A4530 was submitted to the agency on September 24, 1987, as FAP 7A4045. On March 9, 1992, because of continued deficiencies in the petition, which the agency had not filed, FDA notified the petitioner that it would not continue its review of this petition. Information concerning microbiological and chemical studies, which the agency had requested in several letters to the petitioner, had not been submitted. These studies were needed to demonstrate the bactericidal effectiveness of the petitioned use of the additive and the dietary exposure to oxidation products that might be formed on the chicken during processing. Therefore, FDA planned no further review.

Since that time, the agency has been corresponding with the petitioner and has still not received the requested information. In a September 18, 1995, letter to FDA the petitioner asked whether he had exhausted his administrative remedies. Before receiving a response from FDA, the petitioner filed a lawsuit against the agency. After the dismissal of this lawsuit, the agency responded to the petitioner's original question in an October 16, 1996, letter saying that the petitioner had not exhausted his administrative remedies and that he could either file a new petition that would include the supplemental information requested by the agency or send a written request to FDA asking the agency to file the petition as submitted in accordance with § 171.1(i)(1) (21 CFR 171.1(i)(1)). The petitioner responded in a November 4, 1996, letter indicating that he wants FDA to approve the proposed use of this additive and does not intend to supplement the petition. Therefore, FDA is filing the petition as submitted, in accordance with § 171.1(i)(1). The agency has assigned a new number (FAP 7A4530) to this petition for administrative purposes.

The potential environmental impact of this action is being reviewed. To encourage public participation consistent with regulations promulgated under the National Environmental Policy Act (40 CFR 1501.4(b)), the agency is placing the environmental assessment submitted with the original petition that is the subject of this notice on public display at the Dockets Management Branch (address above) for public review and comment. Interested persons may, on or before February 3, 1997 submit to the Dockets Management Branch (address above) written comments. Two copies of any comments are to be submitted, except that individuals may submit one copy. Comments are to be identified with the docket number found in brackets in the heading of this document. Received comments may be seen in the office above between 9 a.m. and 4 p.m., Monday through Friday. FDA will also place on public display any amendments to, or comments on, the petitioner's environmental assessment without further announcement in the Federal Register. If, based on its review, the agency finds that an environmental impact statement is not required and this petition results in a regulation, the notice of availability of the agency's finding of no significant impact and the evidence supporting that finding will be published with the regulation in the Federal Register in accordance with 21 CFR 25.40(c).

Dated: December 12, 1996.

Alan M. Rulis,

Director, Office of Premarket Approval, Center for Food Safety and Applied Nutrition.

[FR Doc. 96–33380 Filed 12–31–96; 8:45 am]

BILLING CODE 4160–01–F

[Docket No. 96E–0353]

Determination of Regulatory Review Period for Purposes of Patent Extension; DIFFERIN Solution

AGENCY: Food and Drug Administration, HHS.

ACTION: Notice.

SUMMARY: The Food and Drug Administration (FDA) has determined the regulatory review period for DIFFERIN Solution and is publishing this notice of that determination as required by law. FDA has made the determination because of the submission of an application to the Commissioner of Patents and Trademarks, Department of Commerce, for the extension of a patent which claims that human drug product.

ADDRESSES: Written comments and petitions should be directed to the Dockets Management Branch (HFA–305), Food and Drug Administration, 12420 Parklawn Dr., rm. 1–23, Rockville, MD 20857.

FOR FURTHER INFORMATION CONTACT: Brian J. Malkin, Office of Health Affairs (HFY–20), Food and Drug Administration, 5600 Fishers Lane, Rockville, MD 20857, 301–443–1382.

SUPPLEMENTARY INFORMATION: The Drug Price Competition and Patent Term Restoration Act of 1984 (Pub. L. 98–417) and the Generic Animal Drug and Patent Term Restoration Act (Pub. L. 100–670) generally provide that a patent may be extended for a period of up to 5 years so long as the patented item (human drug product, animal drug product, medical device, food additive, or color additive) was subject to regulatory review by FDA before the item was marketed. Under these acts, a product's regulatory review period forms the basis for determining the amount of extension an applicant may receive.

A regulatory review period consists of two periods of time: A testing phase and an approval phase. For human drug products, the testing phase begins when the exemption to permit the clinical investigations of the drug becomes effective and runs until the approval phase begins. The approval phase starts with the initial submission of an application to market the human drug product and continues until FDA grants permission to market the drug product. Although only a portion of a regulatory review period may count toward the actual amount of extension that the Commissioner of Patents and Trademarks may award (for example, half the testing phase must be subtracted as well as any time that may have occurred before the patent was issued), FDA's determination of the length of a regulatory review period for a human drug product will include all of the testing phase and approval phase as specified in 35 U.S.C. 156(g)(1)(B).

FDA recently approved for marketing the human drug product DIFFERIN Solution (adapalene). DIFFERIN Solution is indicated for the topical treatment of acne vulgaris. Subsequent to this approval, the Patent and Trademark Office received a patent term restoration application for DIFFERIN Solution (U.S. Patent No. 5,212,303) from Centre International de Recherches Dermatologiques (CIRD), and the Patent and Trademark Office requested FDA's assistance in determining this patent's eligibility for patent term restoration. In a letter dated October 24, 1996, FDA advised the Patent and Trademark Office that this human drug product had undergone a regulatory review period and that the approval of DIFFERIN Solution represented the first permitted commercial marketing or use of the product. Shortly thereafter, the Patent and Trademark Office requested that FDA determine the product's regulatory review period.

FDA has determined that the applicable regulatory review period for DIFFERIN Solution is 2,814 days. Of this time, 1,651 days occurred during the testing phase of the regulatory review period, while 1,163 days occurred during the approval phase. These periods of time were derived from the following dates:

1. *The date an exemption under section 505(i) of the Federal Food, Drug, and Cosmetic Act (21 U.S.C. 355(i)) became effective*: September 18, 1988. FDA has verified the applicant's claim that the date that the investigational new drug application became effective was on September 18, 1988.

2. *The date the application was initially submitted with respect to the human drug product under section 505(b) of the Federal Food, Drug, and Cosmetic Act*: March 26, 1993. The applicant claims March 19, 1993, as the date the new drug application (NDA) for DIFFERIN Solution (NDA 20–338) was initially submitted. However, FDA records indicate that NDA 20–338 was submitted on March 26, 1993.

3. *The date the application was approved*: May 31, 1996. FDA has verified the applicant's claim that NDA 20–338 was approved on May 31, 1996.

This determination of the regulatory review period establishes the maximum potential length of a patent extension. However, the U.S. Patent and Trademark Office applies several statutory limitations in its calculations of the actual period for patent extension. In its application for patent extension, this applicant seeks 13 days of patent term extension.

Anyone with knowledge that any of the dates as published is incorrect may, on or before March 3, 1997 submit to the Dockets Management Branch (address above) written comments and ask for a redetermination. Furthermore, any interested person may petition FDA, on or before July 1, 1997 for a determination regarding whether the applicant for extension acted with due diligence during the regulatory review period. To meet its burden, the petition must contain sufficient facts to merit an FDA investigation. (See H. Rept. 857, part 1, 98th Cong., 2d sess., pp. 41–42, 1984.) Petitions should be in the format specified in 21 CFR 10.30.

Comments and petitions should be submitted to the Dockets Management Branch (address above) in three copies (except that individuals may submit single copies) and identified with the docket number found in brackets in the heading of this document. Comments and petitions may be seen in the Dockets Management Branch between 9 a.m. and 4 p.m., Monday through Friday.

Dated: December 20, 1996.

Stuart L. Nightingale,

Associate Commissioner for Health Affairs.

[FR Doc. 96–33381 Filed 12–31–96; 8:45 am]

BILLING CODE 4160–01–F

[Docket No. 96N–0449]

Current Science and Technology on Fresh Juices; Extension of Comment Period

AGENCY: Food and Drug Administration, HHS.

ACTION: Notice; extension of comment period.

SUMMARY: The Food and Drug Administration (FDA) is extending to February 3, 1997, the comment period on the notice that appeared in the Federal Register of November 27, 1996 (61 FR 60290). The notice announced a meeting to review the current science, including technological and safety factors, relating to fresh juices and to consider any measures necessary to provide safe fruit juices. The agency is taking this action in response to several requests for an extension of the comment period.

DATES: Written comments by February 3, 1997.

ADDRESSES: Submit written comments to the Dockets Management Branch (HFA–305), Food and Drug Administration, 12420 Parklawn Dr., rm. 1–23, Rockville, MD 20857.

FOR FURTHER INFORMATION CONTACT: Catherine M. DeRoever, Center for Food Safety and Applied Nutrition (HFS–22), Food and Drug Administration, 200 C St. SW., Washington, DC 20204, 202–205–4251, (FAX) 202–205–4970, (Internet) CMD@FDACF.SSW.DHHS.GOV.

SUPPLEMENTARY INFORMATION: In the Federal Register of November 27, 1996 (61 FR 60290), FDA requested information and data on: (1) Appropriate good manufacturing practices (GMP's) in juice processing; (2) identification of critical control points in juice processing under a Hazard Analysis and Critical Control Point System (HACCP); (3) whether pasteurization of fresh juices is appropriate or necessary; (4) sanitizers that are available to control pathogens of concern; (5) alternative available food additives that will ensure safety of fresh juices; (6) any new technologies/intervention strategies that are becoming available that appear to be effective in the control of *E. coli 0157:H7* or other pathogens of concern; and (7) the advice that should be given to consumers on fresh and other juice products. Interested persons were given until January 3, 1997, to submit written comments on the notice.

FDA received several requests for an extension of the comment period. After careful consideration, FDA has decided to extend the comment period to February 3, 1997, to facilitate the submission of relevant information on the above topics.

Interested persons may, on or before February 3, 1997, submit to the Dockets Management Branch (address above) written comments regarding this notice. Two copies of any comments are to be submitted, except that individuals may submit one copy. Comments are to be

identified with the docket number found in brackets in the heading of this document. Received comments may be seen in the office above between 9 a.m. and 4 p.m., Monday through Friday.

Dated: December 26, 1996.

William K. Hubbard,

Associate Commissioner for Policy Coordination.

[FR Doc. 96–33382 Filed 12–31–96; 8:45 am]

BILLING CODE 4160–01–F

Statement of Organization, Functions, and Delegations of Authority

Part H, Chapter HF (Food and Drug Administration) of the Statement of Organization, Functions, and Delegations of Authority for the Department of Health and Human Services (35 FR 3685, February 25, 1970, and 56 FR 29484, June 27, 1991, as amended most recently in pertinent part at 60 FR 65350, December 19, 1995) is amended to reflect the realignment of the Office of Surveillance and Biometrics, Center for Devices and Radiological Health (CDRH), Office of Operations, in the Food and Drug Administration (FDA).

The functional statements of the Office of Surveillance and Biometrics have been modified to include participation in research and consultation on health economics and cost effectiveness methodology issues. In addition, program management activities have been elevated to the immediate office which will tighten the span of control within the Office.

Under section HF–B, Organization:

1. Delete the subparagraph *Program Management Staff (HFWH2), Center for Devices and Radiological Health (HFW),* in its entirety.

2. Delete the subparagraphs *Office of Surveillance and Biometrics (HFWH)* in their entirety and insert the following new subparagraphs under *Office of Surveillance and Biometrics (HFWH),* reading as follows:

Office of Surveillance and Biometrics. Advises, coordinates, and provides consultation to the Center Director and other Agency officials including the Commissioner on Center programs and policies concerning premarket review activities, postmarket management activities, surveillance and biometrics programs and activities, and regulatory matters for medical devices and radiological products.

Establishes policy for surveillance programs. Designs, develops, and implements a Center program to acquire device experience information; identifies and analyzes device problems; develops solution strategies to such problems; and tracks programs or solution implementations.

Provides statistical, epidemiological, and biometric services, and conducts research in support of the operating and scientific programs of the Center.

Represents the Center with other governmental agencies (Federal, State, and International), industry, and consumer organizations on issues related to the activities of the Office including postmarket management activities.

Provides consultation to Center Offices on health economics and cost effectiveness methodology issues pertaining to claims for medical devices.

Plans, develops, and implements office administrative support and services including program planning, financial management, extramural and collaborative efforts, procurement, travel, personnel administration, employee development and training, employee evaluations, recognition programs, property management, and facility space management.

3. Delete the subparagraphs *Issues Management Staff (HFWH1)* in their entirety and insert the following new subparagraphs under paragraph *Issues Management Staff (HFWH1), Center for Devices and Radiological Health (HFW),* reading as follows:

Issues Management Staff (HFWH1). Directs and monitors the analysis, resolution, development and solution implementation of postmarket issues; presents these issues to the CDRH, FDA, other agencies, and foreign governments as appropriate. Coordinates and disseminates information on developing issues and solution strategies within CDRH, FDA, and with other agencies and foreign governments as appropriate.

Provides and coordinates input on postmarket concerns and perspectives in support of Center initiatives, including encouragement and facilitation of the use of postmarket data available within the Center.

Develops and directs systems that track and monitor CDRH's postmarket surveillance issues; documents the recommendations, resolutions, and solution monitoring, and produces final reports for review by Center management.

Directs the preparation of issue papers and other reports or studies to promote the resolution of public health issues; coordinates these analyses with subject matter experts throughout CDRH, FDA and other Department of Health and Human Services agencies as required.

Represents CDRH's postmarketing surveillance concerns at industry, trade, professional, Agency, and international meetings. Develops and delivers speeches and papers, and acts as the Center's liaisons for postmarket issues.

4. Prior Delegations of Authority. Pending further delegations, directives, or orders by the Commissioner of Food and Drugs, all delegations of authority to positions of the affected organizations in effect prior to this date shall continue in effect in them or their successors.

Dated: November 27, 1996.

Michael A. Friedman,

Deputy Commissioner for Operations.

[FR Doc. 96–33383 Filed 12–31–96; 8:45 am]

BILLING CODE 4160–01–F

Substance Abuse and Mental Health Services Administration

Notice of Meeting

Pursuant to Public Law 92–463, notice is hereby given of the following meeting of the SAMHSA Special Emphasis Panel I in January.

A summary of the meeting and a roster of the members may be obtained from: Ms. Dee Herman, Committee Management Liaison, SAMHSA Office of Extramural Activities Review, 5600 Fishers Lane, Room 17–89, Rockville, Maryland 20857. Telephone: (301)443–4783.

Substantive program information may be obtained from the individual named as Contact for the meeting listed below.

The meeting will include the review, discussion and evaluation of individual grant applications. These discussions could reveal personal information concerning individuals associated with the applications. Accordingly, this meeting is concerned with matters exempt from mandatory disclosure in Title 5 U.S.C. 552b(c)(6) and 5 U.S.C. App.2, Section 10(d).

Committee Name: SAMHSA Special Emphasis Panel I (SEP I).

Meeting Date: January 9, 1997, 9:00 a.m.–12:00 Noon.

Place: Doubletree Hotel—Room: Presidential II, 1750 Rockville Pike, Rockville, Maryland.

Closed: January 9, 1997, 9:00 a.m. until 12:00 Noon.

Panel: Cooperative Agreement with the National Association of State Alcohol and Drug Directors (NASADAD) GFA No. AS 97–0001.

Contact: Katie Baas, Room 17–89, Parklawn Building, Telephone: (301) 443–2592 and FAX: (301) 443–3437.

This notice is being published less than 15 days prior to the meeting due to the urgent need to meet timing limitations imposed by the review and funding cycle.

Dated: December 27, 1996.

Jeri Lipov,

Committee Management Officer, SAMHSA.

[FR Doc. 96–33379 Filed 12–31–96; 8:45 am]

BILLING CODE 4162–20–P

DEPARTMENT OF THE INTERIOR

Office of the Assistant Secretary—Water and Science; Central Utah Project Completion Act; Upalco Replacement Project

AGENCIES: The Department of the Interior (Department) and the Central Utah Water Conservancy District (District).

ACTION: Notice of availability of the Draft Environmental Impact Statement: DES 96–51.

SUMMARY: Pursuant to section 102(2)(C) of the National Environmental Policy Act of 1969, as amended, the Department, and the District have issued a joint Draft Environmental Impact Statement (Draft EIS) on the Upalco Replacement Project (Upalco). The Draft EIS consists of a proposed action and alternatives to construct a combination of features that will develop water supplies for the Upalco Unit of the Central Utah Project in the Unita Basin of northeastern Utah. The Draft EIS evaluates the environmental impacts of water storage reservoirs, improved diversion and distribution of water, water conservation, stabilization of high mountain lakes, instream flows, fish and wildlife mitigation and enhancement, recreation developments and land retirement.

There is a need to manage the water supply within the Upalco Unit to develop resources of the Ute Indian Tribe of the Uintah and Ouray Reservation, provide early and late season irrigation water, provide municipal water supplies, and provide water and facilities for environmental and recreation purposes. The proposed action and alternatives seek to meet these needs by providing storage, improved distribution of water, water conservation, municipal and industrial water, instream flows, fish and wildlife enhancements, and recreation developments.

Public participation has occurred throughout the EIS process. A Notice of Intent was filed in the Federal Register on December 31, 1992. Since that time, open houses, public meetings, and mail-outs have been conducted to solicit comments and ideas. Any comments received throughout the process have been considered.

DATES: Written comments on the Draft EIS must be submitted or postmarked no later than March 4, 1997. Comments on the Draft EIS may also be presented verbally or submitted in writing at the public hearings to be held at the following times and locations:

- Wednesday, February 5, 1997, 6:00 p.m., Altamont High School Auditorium, Highway 87 (North Side), Altamont, Utah.
- Thursday, February 6, 1997, 6:00 p.m., Salt Lake County Commission Chambers, Room N1100, 2001 South State Street, Salt Lake City, Utah.
- Tuesday, February 11, 1997, 1:00 p.m., Ute Tribal Auditorium, Ute Tribal Headquarters, Fort Duchesne, Utah.

The public hearings are being held to address the Draft EIS for the proposed Upalco Unit Replacement Project. In order to be included as part of the hearing record, written testimony must be submitted at the time of the hearing. Verbal testimony will be limited to 5 minutes. Those wishing to give testimony at a hearing should submit a registration form, included at the end of the Draft EIS, to the address listed below by, January 31, 1997.

ADDRESSES: Comments on the Draft EIS should be addressed to: Terry Holzworth, Project Manager, Central Utah Water Conservancy District, 355 West 1300 South, Orem, Utah 84058.

FOR FURTHER INFORMATION CONTACT: Additional copies of the Draft EIS, copies of the resources technical reports, or information on matters related to this notice can be obtained on request from: Ms. Nancy Hardman, Central Utah Water Conservancy District, 355 West 1300 South, Orem, Utah 84058, Telephone: (801) 226–7187, Fax: (801) 226–7150.

Copies are also available for inspection at:

Central Utah Water Conservancy District, 355 West 1300 South, Orem, Utah 84058

Department of the Interior, Natural Resource Library, Serials Branch, 18th and C Streets, NW, Washington, D.C. 20240

Department of the Interior, Central Utah Project Completion Act Office, 302 East 1860 South, Provo, Utah 84606

Bureau of Indian Affairs, Uintah and Ouray Agency, 988 South 7500 East, Fort Duchesne, Utah 84026

Dated: December 27, 1996.

Ronald Johnston,

CUPCA Program Director, Department of the Interior.

[FR Doc. 96–33344 Filed 12–31–96; 8:45 am]

BILLING CODE 4310–RK–P

Fish and Wildlife Service

Notice of Receipt of Application for Permit

The following applicant has applied for a permit to conduct certain activities with endangered species. This notice is provided pursuant to Section 10(c) of the Endangered Species Act of 1973, as amended (16 U.S.C. 1531 *et seq.*):

PRT–823479

Applicant: Darrel R. Ragan, Statesboro, Georgia.

The applicant requests a permit to take (capture, band, or conduct population surveys) the red-cockaded woodpecker, *Picoides borealis,* eastern indigo snake, *Drymarchon corais couperi,* and wood stork, *Mycteria americana,* throughout the species' ranges in coastal Georgia and South Carolina for the purpose of enhancement of survival of these species.

Written data or comments on this application should be submitted to: Regional Permit Biologist, U.S. Fish and Wildlife Service, 1875 Century Boulevard, Suite 200, Atlanta, Georgia 30345. All data and comments must be received within 30 days of the date of this publication.

Documents and other information submitted with these applications are available for review, subject to the requirements of the Privacy Act and Freedom of Information Act, by any party who submits a written request for a copy of such documents to the following office within 30 days of the date of publication of this notice: U.S. Fish and Wildlife Service, 1875 Century Boulevard, Suite 200, Atlanta, Georgia 30345 (Attn: David Dell, Permit Biologist). Telephone: 404/679–7313; Fax: 404/679–7081.

Dated: December 24, 1996.

Noreen K. Clough,

Regional Director.

[FR Doc. 96–33333 Filed 12–31–96; 8:45 am]

BILLING CODE 4316–55–M

Bureau of Land Management

[OR–958–0777–63; GP7–0012; OR–50483]

Public Land Order 7233; Withdrawal of National Forest System Lands for Administrative Sites and a Wild and Scenic River Corridor; Oregon

AGENCY: Bureau of Land Management, Interior.

ACTION: Public Land Order.

SUMMARY: This order withdraws 2,090 acres of National Forest System lands in

the Rogue River National Forest from mining for a period of 20 years for the Department of Agriculture, Forest Service, to protect the Rabbit Ears-Falcon Wildlife Area, the Rogue River Wild and Scenic Corridor, Union Creek Historic District, Abbott Creek and Mill Creek Recreation Sites, and Prospect Ranger Station Administrative Site. The lands have been and will remain open to such forms of disposition as may by law be made of National Forest System lands and to mineral leasing.

EFFECTIVE DATE: Janaury 2, 1997.

FOR FURTHER INFORMATION CONTACT: Betty McCarthy, BLM Oregon/Washington State Office, P.O. Box 2965, Portland, Oregon 97208–2965, 503–952–6155.

By virtue of the authority vested in the Secretary of the Interior by Section 204 of the Federal Land Policy and Management Act of 1976, 43 U.S.C. 1714 (1988), it is ordered as follows:

1. Subject to valid existing rights, the following described National Forest System lands are hereby withdrawn from location and entry under the United States mining laws (30 U.S.C. Ch. 2 (1988)), but not from leasing under the mineral leasing laws, to protect a wildlife area, a wild and scenic corridor, a historic district, two recreation sites, and a ranger station:

Willamette Meridian

Rogue River National Forest

Rabbit Ears-Falcon Wildlife Area

T. 29 S., R. 3 E.,
sec. 26, W½SW¼ and SE¼SW¼;
sec. 27, E½SW¼ and SE¼;
sec. 34, NE¼, E½NW¼, E½NE¼SW¼, N½SE¼, and N½S½SE¼;
sec. 35, W½NE¼, NW¼, N½SW¼, N½SW¼SW¼, and W½NW¼SE¼.

Rogue River Wild and Scenic Corridor

T. 30 S., R. 3 E.,
sec. 1, E½SE¼;
sec. 12, NE¼NE¼NE¼;
sec. 13, E½NW¼;
sec. 23, NE¼NE¼SE¼ and W½W½SE¼;
sec. 34, SE¼NE¼SE¼;
sec. 35, SE¼NE¼NW¼, SW¼SW¼NW¼, and NW¼SE¼NW¼.
T. 31 S., R. 3 E.,
sec. 17, NE¼NW¼NE¼;
sec. 19, NW¼NE¼NE¼ and SE¼SE¼NE¼.
T. 29 S., R. 4 E.,
sec. 10, W½E½NE¼, S½S½SW¼, and E½NW¼SE¼;
sec. 15, N½NW¼;
sec. 21, NW¼NE¼;
sec. 29, SE¼SW¼;
sec. 32, E½NW¼.
T. 29 S., R. 5 E.,
sec. 4, S½NE¼.

Union Creek Historic District

T. 31 S, R. 3 E.,
sec. 2, SW¼SW¼NW¼;
sec. 3, E½NE¼SE¼, SE¼SW¼SE¼, and NW¼SE¼SE¼;
sec. 9, N½NE¼SE¼;
sec. 10, NE¼NW¼NE¼, SW¼NW¼NE¼, and SE¼SE¼NW¼.

Abbott Creek Recreation Site

T. 31 S., R. 3 E.,
sec. 7, E½SE¼SW¼ and W½SW¼SE¼;
sec. 18, NW¼NW¼NE¼ and NE¼NE¼NW¼.

Mill Creek Recreation Site

T. 32 S., R. 3 E.,
sec. 9, SW¼SE¼;
sec. 16, N½NW¼NE¼.

Prospect Ranger Station Administrative Site

T. 32 S., R. 3 E.,
sec. 29, W½NE¼NW¼.

The areas described aggregate 2,090 acres in Jackson and Douglas Counties.

2. The withdrawal made by this order does not alter the applicability of those public land laws governing the use of the National Forest System lands under lease, license, or permit, or governing the disposal of their mineral or vegetative resources other than under the mining laws.

3. This withdrawal will expire 20 years from the effective date of this order unless, as a result of a review conducted before the expiration date pursuant to Section 204(f) of the Federal Land Policy and Management Act of 1976, 43 U.S.C. 1714(f) (1988), the Secretary determines that the withdrawal shall be extended.

Dated: December 23, 1996.

Bob Armstrong,

Assistant Secretary of the Interior.

[FR Doc. 96–33347 Filed 12–31–96; 8:45 am]

BILLING CODE 4310–33–P

[MT–070–97–1430–01]

Resource Management Plan Amendment; Missoula County, Montana

AGENCY: Butte District Office, Bureau of Land Management, Interior.

ACTION: Notice of intent to prepare a Resource Management Plan Amendment.

SUMMARY: A Resource Management Plan Amendment/Environmental Assessment will be prepared to allocate resources and to designate management goals and guidelines for 11,730 acres of land along the lower Blackfoot River in Missoula County, Montana which are proposed for acquisition by exchange. The Garnet Resource Area Resource Management Plan (Garnet RMP), approved in 1986, provide for the disposal and acquisition of lands by exchange based on a specific set of criteria and further, identified public lands for disposal based on this criteria.

Future management of the lands proposed for acquisition has been identified as an issue to be addressed in the Environmental Assessment for the proposed land exchange. Management Areas consistent with the Garnet RMP would be assigned to the lands proposed for acquisition. Thirteen Management Areas were described in the Garnet RMP and all public lands in the Resource Area were placed in one of these categories. Each Management Area places a specific emphasis on future land use and each provides broad direction for future management of the lands in each category.

DATES: A public scoping period will run until February 3, 1997. Comments may be submitted to the address listed below.

FOR FURTHER INFORMATION: Contact the Bureau of Land Management, Attention: James Ledger, 3255 Fort Missoula Road, Missoula, Montana, 59804. Phone: 406–329–3914.

Dated: December 20, 1996.

Darrell C. Sall,

Area Manager.

[FR Doc. 96–33319 Filed 12–31–96; 8:45 am]

BILLING CODE 4310–DN–P

National Park Service

Gettysburg National Military Park Advisory Commission; Notice of Meeting

SUMMARY: This notice sets forth the date of the twentieth meeting of the Gettysburg National Military Park Advisory Commission.

DATES: The Public meeting will be held on January 16, 1997, from 7:00 p.m.–9:00 p.m.

LOCATION: The meeting will be held at Gettysburg Cyclorama Auditorium, 125 Taneytown Road, Gettysburg, Pennsylvania 17325.

AGENDA: Sub-Committee Reports, Requests for Proposals—Visitor Center and Museum, Deer Management, Operational Update on Park Activities, Election of Officers and Citizens Open Forum.

FOR FURTHER INFORMATION CONTACT: John A. Latschar, Superintendent, Gettysburg National Military Park, 97 Taneytown Road, Gettysburg, Pennsylvania 17325.

SUPPLEMENTARY INFORMATION: The meeting will be open to the public. Any member of the public may file with the Commission a written statement concerning agenda items. The statement should be addressed to the Advisory Commission, Gettysburg National Military Park, 97 Taneytown Road, Gettysburg, Pennsylvania 17325. Minutes of the meeting will be available for inspection four weeks after the meeting at the permanent headquarters of the Gettysburg National Military Park located at 97 Taneytown Road, Gettysburg, Pennsylvania 17325.

Dated: December 23, 1996.

David H. Dreier,

Acting Superintendent, Gettysburg NMP/ Eisenhower HNS.

[FR Doc. 96–33136 Filed 12–31–96; 8:45 am]

BILLING CODE 4310–70–M

Bureau of Reclamation

Bay-Delta Advisory Council Meeting

AGENCY: Bureau of Reclamation, Interior.

ACTION: Notice of meetings.

SUMMARY: The Bay-Delta Advisory Council (BDAC) will meet to discuss several issues including: an overview of the Water Quality Common Program; an overview of the System Integrity Common Program; an overview of the general level of detail of the integration of the common programs into the EIS/ EIR; and other items. The Ecosystem Roundtable (a subcommittee of the BDAC) will meet to discuss the following issues: CALFED Management liaisions; implementation strategy; resource needs; and information relative to a fiscal decisionmaking process. Both meetings are open to the public. Interested persons may make oral statements to the BDAC or to the Ecosystem Roundtable or may file written statements for consideration.

DATES: The Bay-Delta Advisory Council meeting will be held from 10:00 am to 5:00 pm on Thursday, January 30, 1997. The Ecosystem Roundtable will meet from 9:30 am to 1:30 p.m on Tuesday, January 21, 1997.

ADDRESSES: The Bay-Delta Advisory Council will meet at the Sacramento Convention Center, 1400 J Street, Room 204, Sacramento, CA. The Ecosystem Roundtable will meet in Room 1131, 1416 Ninth Street, Sacramento, CA.

CONTACT PERSON FOR MORE INFORMATION: For the BDAC meeting, contact Sharon Gross, CALFED Bay-Delta Program, at (916) 657–2666. For the Ecosystem Roundtable meeting contact Cindy Darling, CALFED Bay-Delta Program, at (916) 657–2666. If reasonable accommodation is needed due to a disability, please contact the Equal Employment Opportunity Office at (916) 653–6952 or TDD (916) 653–6934 at least one week prior to the meeting.

SUPPLEMENTARY INFORMATION: The San Francisco Bay/Sacramento-San Joaquin Delta Estuary (Bay-Delta system) is a critically important part of California's natural environment and economy. In recognition of the serious problems facing the region and the complex resource management decisions that must be made, the state of California and the Federal government are working together to stabilize, protect, restore, and renhance the Bay-Delta system. The State and Federal agencies with management and regulatory responsibilities in the Bay-Delta system are working together as CALFED to provide policy direction and oversight for the process.

One area of Bay-Delta management includes the establishment of a joint State-Federal process to develop long-term solutions to problems in the Bay-Delta system related to fish and wildlife, water supply reliability, natural disasters, and water quality. The intent is to develop a comprehensive and balanced plan which addresses all of the resource problems. This effort, the CALFED Bay-Delta Program (Program), is being carried out under the policy direction of CALFED. The CALFED Bay-Delta Program is exploring and developing a long-term solution for a cooperative planning process that will determine the most appropriate strategy and actions necessary to improve water quality, restore health to the Bay-Delta ecosystem, provide for a variety of beneficial uses, and minimize Bay-Delta system vulnerability. A group of citizen advisers representing California's agricultural, environmental, urban, business, fishing, and other interests who have a stake in finding long term solutions for the problems affecting the Bay-Delta system has been charted under the Federal Advisory Committee Act (FACA) as the Bay-Delta Advisory Council (BDAC) to advise CALFED on the program mission, problems to be addressed, and objectives for the CALFED Bay-Delta Program. BDAC provides a forum to help ensure public participation, and will review reports and other materials prepared by CALFED staff. BDAC has established a subcommittee called the Ecosystem Roundtable to provide input on annual work plans to implement ecosystem restoration projects and programs.

Minutes of the meetings will be maintained by the CALFED Bay-Delta Program, Suite 1155, 1416 Ninth Street, Sacramento, CA 95814, and will be available for public inspection during regular business hours, Monday through Friday within 30 days following the meeting.

Dated: December 19, 1996.

Roger Patterson,

Regional Director, Mid-Pacific Region.

[FR Doc. 96–33316 Filed 12–31–96; 8:45 am]

BILLING CODE 4310–94–M

DEPARTMENT OF JUSTICE

Antitrust Division

Notice Pursuant to the National Cooperative Research and Production Act of 1993—CommerceNet Consortium

Notice is hereby given that, on November 15, 1995, pursuant to Section 6(a) of the National Cooperative Research and Production Act of 1993, 15 U.S.C. 4301 *et seq.* (''the Act''), CommerceNet Consortium, (''Consortium'') has filed written notifications simultaneously with the Attorney General and the Federal Trade Commission disclosing certain changes in its membership. The notifications were filed for the purpose of extending the Act's provisions limiting the recovery of antitrust plaintiffs to actual damages under specified circumstances.

Specifically, the following organizations have joined the Consortium as Sponsor Members: ARPA, Arlington, VA; AT&T-Western Technology Center, San Mateo, CA; Avery Dennison Worldwide Office Products Group, Diamond Bar, CA; Bank of America, San Francisco, CA; BBN, Cambridge, MA; Bull Worldwide Information Systems, Foster City, CA; California Trade and Commerce Agency, OST, Pasadena, CA; Deloitte & Touche, Boston, MA; Digital Equipment Corporation, Littleton, MA; Harbinger Corporation, Atlanta, GA; Intuit Inc., Mountain View, CA; Loral Space and Range Systems, Sunnyvale, CA; Lockheed Martin Missiles and Space, Palo Alto, CA; McDonnell Douglas, St. Louis, MO; Novell, Salt Lake City, UT; Premenos, Concord, CA; Sterling Commerce, Reston, VA; 3Com, Santa Clara, CA; U.S. Postal Service, Washington, DC; Visigenic Software, San Mateo, CA; Websoft, San Francisco, CA; and Wright-Patterson Air Force Base, OH.

The following organizations have joined the Consortium as Associate Members: Actra Business Systems,

Sunnyvale, CA; Arthur Andersen L.L.P., San Jose, CA; Arthur D. Little, Inc., San Francisco, CA; Center for Information Technology and Management, Berkeley, CA; CrossRoute, Redwood Shores, CA; Cyberbusiness Association Japan, Tokyo, JAPAN; Cyberpath, Orem, UT; Dacom Corporation, Seoul, KOREA; Daimler Benz Research and Technology, Palo Alto, CA; Defense Information Systems Agency, Reston, VA; Earthweb Inc., New York, NY; Electronic Purchasing Information Corporation, New York, NY; E-Stamp Corporation, Palo Alto, CA; Fablink, Colorado Springs, CO; First Technology Federal Credit Union, Beaverton, OR; France Telecom, San Francisco, CA; Freddie Mac, McLean, VA; GTE, Needham, MA; GC Tech, New York, NY; Internet Business Group (IBG), Bedford, NH; ICAST Communications Inc., Mountain View, CA; iCat Corporation, Seattle, WA; Idea Center Inc., Las Vegas, NV; InReference Inc., Sunnyvale, CA; Institute of the Future, Menlo Park, CA; Internet Profiles (IPRO), Palo Alto, CA; Lizard Communications Inc., Santa Clara, CA; Logistics Advantage, Atlanta, GA; Mediakola, San Jose, CA; Mercentec Inc., Lisle, IL; MFP Australia, Adelaide, AUSTRALIA; Mitsubishu Electric Corporation, Tokyo, JAPAN; MPACT Immedia Systems, Livonia, MI; NACHA/Wespay, San Bruno, CA; nCipher Limited, Cambridge, ENGLAND; NCR, Lincroft, NJ; Netgrocer, New York, NY; NIA, Oakland, CA; National Institute of Standards and Technology (NIST), Gaithersburg, MD; Nortel, Ottawa, Ontario, CANADA; Northern Telecom (Nortel), Research Triangle Park, NC; Novalink Technologies Inc., Fremont, CA; NTT Data Communications, Palo Alto, CA; Partner, Salt Lake City, UT; Paylinx Corporation, St. Louis, MO; Portland Software, Portland, OR; Saqqara Systems, Sunnyvale, CA; Seoul Web Society, Seoul, KOREA; Signal Internet Technologies, Pittsburgh, PA; Skornia Law Firm, San Jose, CA; Software Forum, Palo Alto, CA; Supply Tech, Ann Arbor, MI; Terisa Systems, Los Altos, CA; Underwriters Laboratories Inc., Santa Clara, CA; U.S. Web, Santa Clara, CA; VeriSign, Mountain View, CA; WhoWhere?, Mountain View, CA; WIZnet-Worldwide Internet Solutions Network Inc., Delray Beach, FL; WorldPoint Interactive Inc., Solana Beach, CA; and Xcert Software, Vancouver, British Columbia, CANADA.

The following organizations have joined the Consortium as In-Kind Members: Council of Better Business Bureaus, Arlington, VA; Gray, Cary, Ware & Friedenrich, Palo Alto, CA; and Internet Business Group (IBG), Bedford, NH.

The following Sponsor Members have canceled their memberships: Allan-Bradley Company Inc., Albuquerque, NM; NYNEX Corporation, Middleton, MA; Delphi Internet Services Corporation, Cambridge, MA; InterNex Information Services, Menlo Park, CA; Avex Electronics Inc., Huntsville, AL; D.E. Shaw & Co., L.P., New York, NY; and First Interstate Bancorp, Los Angeles, CA.

The following Associate Members have canceled their memberships: Concurrent Technologies Corporation, Oakland, CA; Intercom-University of Virginia, Computer Science Department, Charlottesville, VA; Tradewinds Technologies Incorporate, Winston-Salem, NC; IEEE Computer Society, Washington, DC; European Union Bank, Antigua, WEST INDIES; Los Alamos National Laboratory, Los Alamos, NM; Frontier Technologies Corporation, Mequon, WI; Nihongo Yellow Pages Inc., San Jose, CA; Dun & Bradstreet, Westport, CT; Arroyo Seco/Fore Play Golf, South Pasadena, CA; CyberMark Inc., Washington, DC; Process Software Corporation, Framingham, MA; Danish International Inc., Sunnyvale CA; Internet Shopping Network, Menlo Park, CA; and Nanothinc, San Francisco, CA.

The following companies have changed their memberships from Associate to In-Kind: I/Pro, Palo Alto, CA; and Vanderbilt University, Nashville, TN.

No other changes have been made in either the membership or planned activities of the Consortium. Membership remains open and the Consortium intends to file additional written notifications disclosing all changes in membership.

On June 13, 1994, the Consortium, as 'Smart Valley CommerceNet Consortium Inc., filed its original notification pursuant to § 6(a) of the Act. The Department of Justice published a notice in the Federal Register pursuant to section 6(b) of the Act on August 31, 1994 (59 FR 45012).

The last notification was filed with the Department on August 17, 1995. A notice was published in the Federal Register on December 18, 1995 (60 FR 65068).

Constance K. Robinson,

Director of Operations, Antitrust Division.

[FR Doc. 96–33309 Filed 12–31–96; 8:45 am]

BILLING CODE 4410–11–M

Notice Pursuant to the National Cooperative Research and Production Act of 1993—Semiconductor Research Corporation

Notice is hereby given that, on December 6, 1996, pursuant to Section 6(a) of the National Cooperative Research and Production Act of 1993, 15 U.S.C. § 4301 *et seq.* (''the Act''), Semiconductor Research Corporation (''SCR'') has filed written notifications simultaneously with the Attorney General and the Federal Trade Commission disclosing changes in its membership status. The notifications were filed for the purpose of extending the Act's provisions limiting the recovery of antitrust plaintiffs to actual damages under specified circumstances. Specifically, AG Associates, Analogy, Inc., and IntelliSense Corporation are no longer members of the joint venture.

No other changes have been made in either the membership or planned activity of the group research project. Membership in this group research project remains open, and Semiconductor Research Corporation intends to file additional written notification disclosing all changes in membership.

On January 7, 1985, Semiconductor Research Corporation filed its original notification pursuant to Section 6(a) of the Act. The Department of Justice published a notice in the Federal Register pursuant to Section 6(b) of the Act on January 30, 1985 (50 FR 4281).

The last notification was filed with the Department on October 16, 1996. A notice was published in the Federal Register pursuant to Section 6(b) of the Act on December 6, 1996 (61 FR 64371).

Constance K. Robinson,

Director of Operations, Antitrust Division.

[FR Doc. 96–33310 Filed 12–31–96; 8:45 am]

BILLING CODE 4410–11–M

DEPARTMENT OF LABOR

[Secretary's Order 5–96]

Delegation of Authorities and Assignment of Responsibilities to the Assistant Secretary for Employment Standards and Other Officials in the Employment Standards Administration

December 27, 1996.

1. *Purpose.* To delegate authorities and assign responsibilities to the Assistant Secretary for Employment Standards and other officials in the Employment Standards Administration.

2. *Directives Affected.* This Order repeals and supersedes Secretary's Order 1–93 (Employment Standards). In

addition, this Order cancels Secretary's Orders: 2–93, 3–93, 4–93, 6–94 (previously superseded in part by Secretary's Order 1–96), 2–95, and 1–96. Finally, this Order cancels my Notice published in the Federal Register at 61 FR 31164 (June 19, 1996).

3. *Background.* This Order, which repeals and supersedes Secretary's Order 1–93, constitutes the generic Secretary's Order for the Employment Standards Administration. Specifically, this Order delegates authorities and assigns responsibilities to the Assistant Secretary for Employment Standards and other officials in the Employment Standards Administration as delineated in subparagraphs 3.a.–d. below. All other authority and responsibility set forth in this Order were delegated or assigned previously to the Assistant Secretary for Employment Standards in Secretary's Order 1–93, and this Order continues those delegations and assignments in full force and effect, except as expressly modified herein.

a. *Exchange of Authorities Between the Assistant Secretary for Employment Standards and the Assistant Secretary for Occupational Safety and Health.* This Order, in conjunction with Secretary's Order 6–96, effects an exchange of particular authorities and responsibilities between the Assistant Secretary for Employment Standards and the Assistant Secretary for Occupational Safety and Health. The exchange was tested in a pilot project for Region VI established by Secretary's Order 6–94 (extended by Secretary's Order 1–96), that granted these assistant Secretaries limited concurrent authority to enforce certain environmental and public health-related whistleblower protection laws, which had been delegated to the Employment Standards Administration (ESA) under Secretary's Order 1–93, an certain laws establishing labor standards affecting field sanitation and migrant housing, which had been delegated to the Occupational Safety and Health Administration (OSHA) under Secretary's Order 1–90. The pilot project resulted in a determination that the respective agencies would make better use of their program expertise, and, therefore, that the Department of Labor would more effectively and efficiently utilize its resources, by a permanent transfer of specific enforcement activities between the Assistant Secretaries for ESA and OSHA.

Accordingly, this Order grants the Assistant Secretary for ESA authority under the Occupational Safety and Health Act of 1970, 29 U.S.C. 651 *et seq.*, to enforce compliance by agricultural employers with, and to develop and issue compliance interpretations regarding, the standards on: (1) Field sanitation, 29 C.F.R. 1928.110; and (2) temporary labor camps, 29 C.F.R. 1910.142, as described in subparagraph 4.a.(22)(b) of this Order. (See subparagraph 4.a.(22) of this Order.) Secretary's Order 6–96 grants the Assistant Secretary for OSHA authority to investigate and resolve allegations of discriminatory actions taken by employers against employees in violation of the following statutory whistleblower protection provisions: (1) Section 1450(i) of the Safe Drinking Water Act, 42 U.S.C. 300j–9(i); (2) Section 211 of the Energy Reorganization Act of 1974, as amended, 42 U.S.C. 5851; (3) Section 110(a)–(d) of the Comprehensive Environmental Response Compensation and Liability Act of 1980, 42 U.S.C. 9610(a)–(d); (4) Section 507 of the Federal Water Pollution Control Act, 33 U.S.C. 1367; (5) Section 23 of the Toxic Substances Control Act, 15 U.S.C. 2622; (6) Section 7001 of the Solid Waste Disposal Act, 42 U.S.C. 6971; and (7) Section 322 of the Clean Air Act, 42 U.S.C. 7622.

b. *Delegation to the Assistant Secretary for Employment Standards: Certain Authorities of the Former Assistant Secretary for the American Workplace.* This Order delegates to the Assistant Secretary for ESA certain authorities of the former Assistant Secretary for the American Workplace, relating principally to the Office of Labor-Management Standards, as set forth in Secretary's Order 2–93. This Order thereby cancels a temporary delegation in my Notice published in the Federal Register at 61 FR 31164 (June 19, 1996). Thus, the Assistant Secretary for ESA shall become the legal successor to the residual authorities and responsibilities of the former Assistant Secretary for the American Workplace. (See subparagraphs 4.a.(23)–(28) of this Order.)

c. *Delegation to the Assistant Secretary for Employment Standards, the Wage and Hour Administrator, and the Regional Administrators: Authority To Issue Administrative Subpoenas.* In *Cudahy Packing Co., Ltd.* v. *Holland,* 315 U.S. 357 (1942), the Supreme Court ruled that the Wage and Hour Administrator of ESA could not delegate his subpoena authority under the Fair Labor Standards Act to other officials. However, pursuant to Reorganization Plan No. 6 of 1950, reprinted in 5 U.S.C. App., which was authorized by the Reorganization Act of 1949, all functions of the Administrator and other officers of the Department of Labor were transferred to the Secretary. The Reorganization Plan authorized the Secretary, in turn, to authorize any officer, agency, or employee of the Department to perform any function of the Secretary.

In 1984 Congress expressly ratified Reorganization Plan No. 6 of 1950, see Public Law 98–532 (Oct. 19, 1984), reprinted in 5 U.S.C. 906 note, which thus has the full force and effect of law. Pursuant to this authority, this Order delegates to the Assistant Secretary for ESA, the Wage and Hour Administrator, and the regional administrators, specific authority to issue administrative subpoenas under Section 9 of the Fair Labor Standards Act of 1938, as amended, 29 U.S.C. 209; Section 5 of the Walsh-Healey Public Contracts Act, 41 U.S.C. 39; Section 4(a) of the McNamara-O'Hara Service Contract Act, 41 U.S.C. 353(a); Section 512(b) of the Migrant and Seasonal Agricultural Worker Protection Act of 1983, 29 U.S.C. 1862(b); Section 5(b) of the Employee Polygraph Protection Act of 1988, 29 U.S.C. 2004(b); Section 106 of the Family and Medical Leave Act of 1993, 29 U.S.C. 2616; and Section 8(b) of the Occupational Safety and Health Act of 1970, 29 U.S.C. 657(b), with respect to the authority delegated by this Order. (See subparagraphs 4.a.(1)–(3), (8), (9), (21), (22); 4.b.(1); and 4.c. of this Order.)

d. *Delegation to the Assistant Secretary for Employment Standards, the Wage and Hour Administrator, and the Deputy Assistant Secretary for Federal Contract Compliance: Authority To Invoke a Claim of Privilege.* This Order delegates to the Assistant Secretary for ESA, the Wage and Hour Administrator, and the Deputy Assistant Secretary for Federal Contract Compliance, specific authority to formally invoke any necessary governmental claim of privilege arising from the functions of the Wage and Hour Division and the Office of Federal Contract Compliance Programs (this authority was delegated previously to the Wage and Hour Administrator and the Deputy Assistant Secretary for Federal Contract Compliance in Secretary's Orders 3–93 and 4–93, respectively). This Order continues in effect the guidelines, set forth in these earlier Orders, for asserting a formal claim of privilege. (See subparagraphs 4.b.(2) and 4.d. of this Order.)

4. *Delegation of Authority and Assignment of Responsibility.*

a. *The Assistant Secretary for Employment Standards* is hereby delegated authority and assigned responsibility, except as hereinafter provided, for carrying out the employment standards, labor standards,

and labor-management standards policies, programs, and activities of the Department of Labor, including those functions to be performed by the Secretary of Labor under the designated provisions of the following statutes:

(1) The Fair Labor Standards Act of 1938, as amended, 29 U.S.C. 201 *et seq.* (FLSA), including the issuance thereunder of child labor hazardous occupation orders and other regulations concerning child labor standards, and subpoena authority under 29 U.S.C. 209. Authority and responsibility for the Equal Pay Act, Section 6(d) of the FLSA, were transferred to the Equal Employment Opportunity Commission on July 1, 1979, pursuant to the President's Reorganization Plan No. 1 of February 1978, set out in the Appendix to Title 5, Government Organization and Employees.

(2) The Walsh-Healey Public Contracts Act of 1936, as amended, 41 U.S.C. 35 *et seq.*, except those provisions relating to safety and health delegated to the Assistant Secretary for Occupational Safety and Health or the Assistant Secretary for Mine Safety and Health. The authority of the Assistant Secretary for ESA includes subpoena authority under 41 U.S.C. 39.

(3) The McNamara-O'Hara Service Contract Act of 1965, as amended, 41 U.S.C. 351 *et seq.*, except those provisions relating to safety and health delegated to the Assistant Secretary for Occupational Safety and Health. The authority of the Assistant Secretary for ESA includes subpoena authority under 41 U.S.C. 353(a).

(4) The Davis-Bacon Act, as amended, 40 U.S.C. 276a *et seq.*, and any laws now existing or subsequently enacted, providing for prevailing wage findings by the Secretary in accordance with or pursuant to the Davis-Bacon Act; the Copeland Act, 40 U.S.C. 276c; Reorganization Plan No. 14 of 1950; and the Tennessee Valley Authority Act, 16 U.S.C. 831.

(5) The Contract Work Hours and Safety Standards Act, as amended, 40 U.S.C. 327 *et seq.*, except those provisions relating to safety and health delegated to the Assistant Secretary for Occupational Safety and Health.

(6) Title III of the Consumer Credit Protection Act, 15 U.S.C. 1671 *et seq.*

(7) The labor standards provisions contained in Sections 5(i) and 7(g) of the National Foundation for the Arts and the Humanities Act, 20 U.S.C. 954(i) and 956(g), except those provisions relating to safety and health delegated to the Assistant Secretary for Occupational Safety and Health.

(8) The Migrant and Seasonal Agricultural Worker Protection Act of 1983, 29 U.S.C. 1801 *et seq.*, including subpoena authority under 29 U.S.C. 1862(b).

(9) The Employee Polygraph Protection Act of 1988, 29 U.S.C. 2001 *et seq.*, including subpoena authority under 29 U.S.C. 2004(b).

(10) The Federal Employees' Compensation Act, as amended and extended, 5 U.S.C. 8101 *et seq.*, except 5 U.S.C. 8149, as it pertains to the Employees' Compensation Appeals Board.

(11) The Longshore and Harbor Workers' Compensation Act, as amended and extended, 33 U.S.C. 901 *et seq.*, except: 33 U.S.C. 919(d), with respect to administrative law judges in the Office of Administrative Law Judges; 33 U.S.C. 921(b), as it applies to the Benefits Review Board; and activities pursuant to 33 U.S.C. 941, assigned to the Assistant Secretary for Occupational Safety and Health.

(12) The Black Lung Benefits Act, as amended, 30 U.S.C. 901 *et seq.*

(13) The affirmative action provisions of the Vietnam Era Veterans' Readjustment Assistance Act of 1974, as amended, 38 U.S.C. 4212, except for monitoring of the Federal contractor job listing activities under 38 U.S.C. 4212(a) and the annual Federal contractor reporting obligations under 38 U.S.C. 4212(d), delegated to the Assistant Secretary for Veterans' Employment and Training.

(14) Sections 501(a), 501(f), 502, and 503 of the Rehabilitation Act of 1973, as amended, 29 U.S.C. 791(a), 791(f), 792, and 793; and Executive Order 11758 (''Delegating Authority of the President Under the Rehabilitation Act of 1973'') of January 15, 1974.

(15) Executive Order 11246 (''Equal Employment Opportunity'') of September 24, 1965, as amended by Executive Order 11375 of October 13, 1967; and Executive Order 12086 (''Consolidation of Contract Compliance Functions for Equal Employment Opportunity'') of October 5, 1978.

(16) The following provisions of the Immigration and Nationality Act of 1952, as amended, 8 U.S.C. 1101 *et seq.* (INA): Section 218(g)(2), 8 U.S.C. 1188(g)(2), relating to assuring employer compliance with terms and conditions of employment under the temporary alien agricultural labor certification (H–2A) program; and Section 274A(b)(3), 8 U.S.C. 1324A(b)(3), relating to employment eligibility verification and related recordkeeping.

(17) Section 212(m)(2)(E) (ii) through (v) of the INA, 8 U.S.C. 1182(m)(2)(E) (ii) through (v), relating to the complaint, investigation, and penalty provisions of the attestation process for users of nonimmigrant registered nurses (*i.e.*, H–1A Visas).

(18) The enforcement of the attestations required by employers under the INA pertaining to the employment of nonimmigrant longshore workers, Section 258 of the INA, 8 U.S.C. 1288(c)(4) (B)–(F); and foreign students working off-campus, 8 U.S.C. 1184 note; and enforcement of labor condition applications for employment of nonimmigrant professionals, Section 212(n)(2) of the INA, 8 U.S.C. 1182(n)(2).

(19) Joint responsibility and authority with the Assistant Secretary for Employment and Training for enforcing the Equal Employment Opportunity in Apprenticeship and Training requirements, as identified in Secretary's Order 4–90.

(20) Title I of the Americans with Disabilities Act of 1990, 42 U.S.C. 12101 *et seq.*, and the regulations at 41 CFR Part 60–742.

(21) The Family and Medical Leave Act of 1993, 29 U.S.C. 2601 *et seq.*, including subpoena authority under 29 U.S.C. 2616.

(22) The Occupational Safety and Health Act of 1970, 29 U.S.C. 651 *et seq.*, to conduct inspections and investigations, issue administrative subpoenas, issue citations, assess and collect penalties, and enforce any other remedies available under the statute, and to develop and issue compliance interpretations under the statute, with regard to the standards on:

(a) field sanitation, 29 CFR 1928.110; and

(b) temporary labor camps, 29 CFR 1910.142, with respect to any agricultural establishment where employees are engaged in ''agricultural employment'' within the meaning of the Migrant and Seasonal Agricultural Worker Protection Act, 29 U.S.C. 1802(3), regardless of the number of employees, including employees engaged in hand packing of produce into containers, whether done on the ground, on a moving machine, or in a temporary packing shed, except that the Assistant Secretary for Occupational Safety and Health retains enforcement responsibility over temporary labor camps for employees engaged in egg, poultry, or red meat production, or the post-harvest processing of agricultural or horticultural commodities.

The authority of the Assistant Secretary for Employment Standards under the Occupational Safety and Health Act with regard to the standards on field sanitation and temporary labor camps does not include any other agency authorities or responsibilities, such as rulemaking authority. Such

authorities under the statute are retained by the Assistant Secretary for Occupational Safety and Health.

Moreover, nothing in this Order shall be construed as derogating from the right of States operating OSHA-approved State plans under 29 U.S.C. 667 to continue to enforce field sanitation and temporary labor camp standards if they so choose. The Assistant Secretary for Occupational Safety and Health retains the authority to monitor the activity of such States with respect to field sanitation and temporary labor camps.

(23) The Labor-Management Reporting and Disclosure Act of 1959, as amended, 29 U.S.C. 401 *et seq.*

(24) Section 701 (Standards of Conduct for Labor Organizations) of the Civil Service Reform Act of 1978, 5 U.S.C. 7120; Section 1017 of the Foreign Service Act of 1980, 22 U.S.C. 4117; Section 220(a)(1) of the Congressional Accountability Act of 1995, 2 U.S.C. 1351(a)(1); and the regulations pertaining to such sections at 29 C.F.R. Parts 457–459.

(25) Section 1209 of the Postal Reorganization Act of 1970, 39 U.S.C. 1209.

(26) The employee protection provisions of the Federal Transit law, as codified at 49 U.S.C. 5333(b), and related provisions.

(27) Section 405 (a), (b), (c), and (e) of the Rail Passenger Service Act of 1970, 45 U.S.C. 565 (a), (b), (c), and (e).

(28) Section 43(d) of the Airline Deregulation Act of 1978, repealed and reenacted at 49 U.S.C. 42101–42103.

(29) Such additional Federal acts that from time to time may assign to the Secretary or the Department duties and responsibilities similar to those listed under subparagraphs (1)–(28) of this paragraph, as directed by the Secretary.

b. *The Wage and Hour Administrator of the Employment Standards Administration* is hereby delegated authority and assigned responsibility to:

(1) Issue administrative subpoenas under Section 9 of the Fair Labor Standards Act of 1938, as amended, 29 U.S.C. 209; Section 5 of the Walsh-Healey Public Contracts Act, 41 U.S.C. 39; Section 4(a) of the McNamara-O'Hara Service Contract Act, 41 U.S.C. 353(a); Section 512(b) of the Migrant and Seasonal Agricultural Worker Protection Act of 1983, 29 U.S.C. 1862(b); Section 5(b) of the Employee Polygraph Protection Act of 1988, 29 U.S.C. 2004(b); Section 106 of the Family and Medical Leave Act of 1993, 29 U.S.C. 2616; and Section 8(b) of the Occupational Safety and Health Act of 1970, 29 U.S.C. 657(b), with respect to the authority delegated by this Order.

(2) Invoke all appropriate claims of privilege, arising from the functions of the Wage and Hour Division, following his/her personal consideration of the matter and in accordance with the following guidelines:

(a) *Informant's Privilege* (to protect from disclosure the identity of any person who has provided information to the Wage and Hour Division in cases arising under the statutory provisions listed in subparagraph 4.a. of this Order that are delegated or assigned to the Wage and Hour Division): A claim of privilege may be asserted where the Wage-Hour Administrator has determined that disclosure of the privileged matter may: Interfere with the Wage and Hour Division's enforcement of a particular statute for which that Division exercises investigative or enforcement authority; adversely affect persons who have provided information to the Wage and Hour Division; or deter other persons from reporting violations of the statute.

(b) *Deliberative Process Privilege* (to withhold information which may disclose predecisional intra-agency or inter-agency deliberations, including: The analysis and evaluation of facts; written summaries of factual evidence; and recommendations, opinions, or advice on legal or policy matters; in cases arising under the statutory provisions listed in subparagraph 4.a. of this Order that are delegated or assigned to the Wage and Hour Division): A claim of privilege may be asserted where the Wage-Hour Administrator has determined that disclosure of the privileged matter would have an inhibiting effect on the agency's decision-making processes.

(c) *Privilege for Investigative Files* compiled for law enforcement purposes (to withhold information which may reveal the Wage and Hour Division's confidential investigative techniques and procedures): the investigative files privilege may be asserted where the Wage and Hour Administrator has determined that disclosure of the privileged matter may have an adverse impact upon the Wage and Hour Division's enforcement of the statutory provisions that have been delegated or assigned to the Division in subparagraph 4.a. of this Order, by: Disclosing investigative techniques and methodologies; deterring persons from providing information to the Wage and Hour Division; prematurely revealing the facts of the Wage and Hour Division's case; or disclosing the identities of persons who have provided information under an express or implied promise of confidentiality.

(d) Prior to filing a formal claim of privilege, the Wage and Hour Administrator shall personally review: All the documents sought to be withheld (or, in cases where the volume is so large all of the documents cannot be personally reviewed in a reasonable time, an adequate and representative sample of such documents); and a description or summary of the litigation in which the disclosure is sought.

(e) In asserting a claim of governmental privilege, the Wage and Hour Administrator may ask the Solicitor of Labor or the Solicitor's representative to file any necessary legal papers or documents.

c. *The Wage and Hour Regional Administrators of the Employment Standards Administration* are hereby delegated authority and assigned responsibility to issue administrative subpoenas under Section 9 of the Fair Labor Standards Act of 1938, as amended, 29 U.S.C. 209; Section 5 of the Walsh-Healey Public Contracts Act, 41 U.S.C. 39; Section 4(a) of the McNamara-O'Hara Service Contract Act, 41 U.S.C. 353(a); Section 512(b) of the Migrant and Seasonal Agricultural Worker Protection Act of 1983, 29 U.S.C. 1862(b); Section 5(b) of the Employee Polygraph Protection Act of 1988, 29 U.S.C. 2004(b); Section 106 of the Family and Medical Leave Act of 1993, 29 U.S.C. 2616; and Section 8(b) of the Occupational Safety and Health Act of 1970, 29 U.S.C. 657(b), with respect to the authority delegated by this Order.

d. *The Deputy Assistant Secretary for Federal Contract Compliance of the Employment Standards Administration* is hereby delegated authority and assigned responsibility to invoke all appropriate claims of privilege, arising from the functions of the Office of Federal Contract Compliance Programs (OFCCP), following his/her personal consideration of the matter and in accordance with the following guidelines:

(1) *Informant's Privilege* (to protect from disclosure the identity of any person who has provided information to OFCCP in cases arising under an authority delegated or assigned to OFCCP in subparagraph 4.a. of this Order): A claim of privilege may be asserted where the Deputy Assistant Secretary for Federal Contract Compliance has determined that disclosure of the privileged matter may: interfere with an investigative or enforcement action taken by OFCCP under an authority delegated or assigned to OFCCP in subparagraph 4.a. of this Order; adversely affect persons who have provided information to

OFCCP; or deter other persons from reporting violations of the statute or other authority.

(2) *Deliberative Process Privilege* (to withhold information which may disclose predecisional intra-agency or inter-agency deliberations, including: the analysis and evaluation of facts; written summaries of factual evidence; and recommendations, opinions or advice on legal or policy matters; in cases arising under an authority delegated or assigned to OFCCP in subparagraph 4.a. of this Order): A claim of privilege may be asserted where the Deputy Assistant Secretary for Federal Contract Compliance has determined that disclosure of the privilege matter would have an inhibiting effect on the agency's decision-making processes.

(3) *Privilege for Investigative Files* compiled for law enforcement purposes (to withhold information which may reveal OFCCP's confidential investigative techniques and procedures): The investigative files privilege may be asserted where the Deputy Assistant Secretary for Federal Contract Compliance has determined that disclosure of the privileged matter may have an adverse impact upon OFCCP's enforcement of an authority delegated or assigned to OFCCP in subparagraph 4.a. of this Order, by: Disclosing investigative techniques and methodologies; deterring persons from providing information to OFCCP; prematurely revealing the facts of OFCCP's case; or disclosing the identities of persons who have provided information under an express or implied promise of confidentiality.

(4) Prior to filing a formal claim of privilege, the Director shall personnally review: All the documents sought to be withheld (or, in cases where the volume is so large that all of the documents cannot be personally reviewed in a reasonable time, an adequate and representative sample of such documents); and a description or summary of the litigation in which the disclosure is sought.

(5) In asserting a claim of governmental privilege, the Deputy Assistant Secretary for Federal Contract Compliance may ask the Solicitor or the Solicitor's representative to file any necessary legal papers or documents.

e. *The Assistant Secretary for Employment Standards and the Assistant Secretary for Occupational Safety and Health* are directed to confer regularly on enforcement of the Occupational Safety and Health Act with regard to the standards on field sanitation and temporary labor camps (see subparagraph 4.a.(22) of this Order), and to enter into any memoranda of understanding which may be appropriate to clarify questions of coverage which arise in the course of such enforcement.

f. *The Chief Financial Officer* is assigned responsibility, in accordance with applicable appropriations enactments, for assuring that resources associated with the programs and functions of the Occupational Safety and Health Administration and the Office of Labor-Management Standards are reallocated and transferred to ESA, as appropriate, in an orderly and equitable manner.

g. *The Assistant Secretary for Administration and Management* is assigned responsibility to assure that any transfer of resources effecting this Order is fully consistent with the budget policies of the Department and that consultation and negotiation, as appropriate, with representatives of any employees affected by this exchange of responsibilities is conducted. The Assistant Secretary for Administration and Management is also responsible for providing or assuring that appropriate administrative and management support is furnished, as required, for the efficient and effective operation of these programs.

h. *The Solicitor of Labor* shall have the responsibility for providing legal advice and assistance to all officers of the Department relating to the administration of the statutory provisions, regulations, and Executive Orders listed above. The bringing of legal proceedings under those authorities, the representation of the Secretary and/or other officials of the Department of Labor, and the determination of whether such proceedings or representations are appropriate in a given case, and delegated exclusively to the Solicitor.

5. *Reservation of Authority and Responsibility.*

a. The submission of reports and recommendations to the President and the Congress concerning the Administrative Orders listed above is reserved to the Secretary.

b. Nothing in this Order shall limit or modify the delegation of authority and assignment of responsibility to the Administrative Review Board by Secretary's Order 2–96 (April 17, 1996).

c. Except as expressly provided, nothing in this Order shall limit or modify the provisions of any other Order, including Secretary's Order 2–90 (Office of Inspector General).

6. *Redelegation of Authority.* The Assistant Secretary for Employment Standards, the Chief Financial Officer, the Assistant Secretary for Administration and Management, and the Solicitor of Labor may redelegate authority delegated in this Order.

7. *Effective Dates.*

a. The delegation of authority and assignment of responsibility set forth in subparagraphs 4.a.(23)–(28) of this Order shall be effective upon publication in the Federal Register.

b. All other delegations of authority and assignments of responsibility set forth in paragraph 4, above shall be effective on February 3, 1997.

Robert B. Reich,

Secretary of Labor.

[FR Doc. 96–33365 Filed 12–31–96; 8:45 am]

BILLING CODE 4510–23–M

[Secretary's Order 6–96]

Delegation of Authority and Assignment of Responsibility to the Assistant Secretary for Occupation Safety and Health

December 27, 1996.

1. *Purpose.* To delegate authority and assign responsibility to the Assistant Secretary for Occupational Safety and Health.

2. *Directives Affected.* This Order repeals and supersedes Secretary's Order 1–90 (Occupational Safety and Health). In addition, this Order cancels Secretary's Orders 6–94 (previously superseded in part by Secretary's Order 1–96) and 1–96.

3. *Background.* This Order, which repeals and supersedes Secretary's Order 1–90, constitutes the generic Secretary's Order for the Occupational Safety and Health Administration. Specifically, this Order, in conjunction with Secretary's Order 5–96, effects an exchange of particular authorities and responsibilities between the Assistant Secretary for Employment Standards and the Assistant Secretary for Occupational Safety and Health. The exchange was tested in a pilot project for Region VI established by Secretary's Order 6–94 (extended by Secretary's Order 1–96), that granted these Assistant Secretaries limited concurrent authority to enforce certain laws establishing labor standards affecting field sanitation and migrant housing, which had been delegated to the Occupational Safety and Health Administration (OSHA) under Secretary's Order 1–90, and certain environmental and public health-related whiteblower protection laws, which had been delegated to the Employment Standards Administration (ESA) under Secretary's Order 1–93. The pilot project resulted in a determination that the respective agencies would make better

use of their program expertise, and, therefore, that the Department of Labor would more effectively and efficiently utilize its resources, by a permanent transfer of specific enforcement activities between the Assistant Secretaries for OSHA and ESA.

Accordingly, this Order grants the Assistant Secretary for OSHA authority to investigate and resolve allegations of discriminatory actions taken by employers against employees in violation of the following statutory whitleblower protection provisions: (1) Section 1450(i) of the Safe Drinking Water Act, 42 U.S.C. 300j–9(i); (2) Section 211 of the Energy Reorganization Act of 1974, as amended, 42 U.S.C. 5851; (3) Section 110(a)–(d) of the Comprehensive Environmental Response Compensation and Liability Act of 1980, 42 U.S.C. 9610(a)–(d); (4) Section 507 of the Federal Water Pollution Control Act, 33 U.S.C. 1367; (5) Section 23 of the Toxic Substances Control act, 15 U.S.C. 2622; (6) Section 7001 of the Solid Waste Disposal Act, 42 U.S.C. 6971; and (7) Section 322 of the Clean Air Act, 42 U.S.C. 7622. (See subparagraphs 4.a. (1)(l)–(r) of this Order.) Secretary's Order 5–96 grants the Assistant Secretary for ESA authority under the Occupational Safety and Health Act of 1970, 29 U.S.C. 651 *et seq.*, to enforce compliance by agricultural employers with, and to develop and issue compliance interpretations regarding, the standards on: (1) Field sanitation, 29 C.F.R. 1928.110; and (2) temporary labor camps, 29 C.F.R. 1910.142, as described in subparagraph 4.a.(2)(b) of this Order. (See subparagraph 4.a. (2) of this Order).

All other authority and responsibility set forth in this Order were delegated or assigned previously to the Assistant Secretary for OSHA in Secretary's Order 1–90, and this Order continues those delegations and assignments in full force and effect, except as expressly modified herein.

4. *Delegation of Authority and Assignment of Responsibility.*

a. *The Assistant Secretary for Occupational Safety and Health*

(1) The Assistant Secretary for Occupational Safety and Health is delegated authority and assigned responsibility for administering the safety and health programs and activities of the Department of Labor, except as provided in subparagraph 4.a.(2) below, under the designated provisions of the following statutes:

(a) The Occupational Safety and Health Act of 1970, 29 U.S.C. 651 *et seq.*

(b) The Walsh-Healey Public Contracts Act of 1936, as amended, 41 U.S.C. 35, 37–41, 43–45.

(c) The McNamara-O'Hara Service Contract Act of 1965, as amended, 41 U.S.C. 351–354, 356–357.

(d) The Contract Work Hours and Safety Standards Act, as amended, 40 U.S.C. 329, 333.

(e) The Maritime Safety Act of 1958, 33 U.S.C. 941.

(f) The National Foundation on the Arts and the Humanities Act of 1965, 20 U.S.C. 954(i)(2).

(g) 5 U.S.C. 7902 and any Executive Order thereunder.

(h) Executive Order 12196 (''Occupational Safety and Health Programs for Federal Employees'') of February 26, 1980.

(i) 49 U.S.C. 31105, the whistleblower provision of the Surface Transportation Assistance Act of 1982.

(j) Section 211 of the Asbestos Hazard Emergency Response Act of 1986, 15 U.S.C. 2651.

(k) Section 7 of the International Safe Container Act, 46 U.S.C. App. 1505.

(l) Section 1450(i) of the Safe Drinking Water Act, 42 U.S.C. 300J–9(i).

(m) Section 211 of the Energy Reorganization Act of 1974, as amended, 42 U.S.C. 5851.

(n) Section 110 (a)–(d) of the Comprehensive Environmental Response, Compensation and Liability Act of 1980, 42 U.S.C. 9610 (a)–(d).

(o) Section 507 of the Federal Water Pollution Control Act, 33 U.S.C. 1367.

(p) Section 23 of the Toxic Substances Control Act, 15 U.S.C. 2622.

(q) Section 7001 of the Solid Waste Disposal Act, 42 U.S.C. 6971.

(r) Section 322 of the Clean Air Act, 42 U.S.C. 7622.

(s) Responsibilities of the Secretary of Labor with respect to safety and health provisions of any other Federal statutes except those related to mine safety and health, the issuance of child labor hazardous occupation orders, and Department of Labor employee safety and health, which are administered pursuant to Secretary's Orders 3–78, 5–96, and 5–95, respectively.

(2) The authority of the Assistant Secretary for Occupational Safety and Health under the Occupational Safety and Health Act of 1970 does not include authority to conduct inspections and investigations, issue citations, assess and collect penalties, or enforce any other remedies available under the statute, or to develop and issue compliance interpretations under the statute, with regard to the standards on:

(a) field sanitation, 29 CFR 1928.110; and

(b) temporary labor camps, 29 CFR 1910.142, with respect to any agricultural establishment where employees are engaged in ''agricultural employment'' within the meaning of the Migrant and Seasonal Agricultural Worker Protection Act, 29 U.S.C. 1802(3), regardless of the number of employees, including employees engaged in hand packing of produce into containers, whether done on the ground, on a moving machine, or in a temporary packing shed, except that the Assistant Secretary for Occupational Safety and Health retains enforcement responsibility over temporary labor camps for employees engaged in egg, poultry, or red meat production, or the post-harvest processing of agricultural or horticultural commodities.

Nothing in this Order shall be construed as derogating from the right of States operating OSHA-approved State plans under 29 U.S.C. 667 to continue to enforce field sanitation and temporary labor camp standards if they so choose. The Assistant Secretary for OSHA retains the authority to monitor the activity of such States with respect to field sanitation and temporary labor camps. Moreover, the Assistant Secretary for OSHA retains all other agency authority and responsibility under the Occupational Safety and Health Act with regard to the standards on field sanitation and temporary labor camps, such as rulemaking authority.

(3) The Assistant Secretary for Occupational Safety and Health is also delegated authority and assigned responsibility for:

(a) Serving as Chairperson of the Federal Advisory Council on Occupational Safety and Health, as provided for by Executive Order 12196.

(b) Coordinating Agency efforts with those of other officials or agencies having responsibilities in the occupational safety and health area.

b. *The Assistant Secretary for Occupational Safety and Health and the Assistant Secretary for Employment Standards* are directed to confer regularly on enforcement of the Occupational Safety and Health Act with regard to the standards on field sanitation and temporary labor camps (see subparagraph 4.a. (2) of this Order), and to enter into any memoranda of understanding which may be appropriate to clarify questions of coverage which arise in the course of such enforcement.

c. *The Chief Financial Officer* is assigned responsibility, in accordance with applicable appropriations enactments, for assuring that resources associated with the programs and functions of the Employment Standards Administration are reallocated and transferred to OSHA, as appropriate, in an orderly and equitable manner.

d. *The Assistant Secretary for Administration and Management* is assigned responsibility to assure that any transfer of resources effecting this Order is fully consistent with the budget policies of the Department and that consultation and negotiation, as appropriate, with representatives of any employees affected by this exchange of responsibilities is conducted. The Assistant Secretary for Administration and Management is also responsible for providing or assuring that appropriate administrative and management support is furnished, as required, for the efficient and effective operation of these programs.

e. *The Solicitor of Labor* shall have the responsibility for providing legal advice and assistance to all officers of the Department relating to the administration of the statutory provisions and Executive Orders listed above. The bringing of legal proceedings under those authorities, the representation of the Secretary and/or other officials of the Department of Labor, and the determination of whether such proceedings or representations are appropriate in a given case, are delegated exclusively to the Solicitor.

f. *The Commissioner of Labor Statistics* is delegated authority and assigned responsibility for:

(1) Furthering the purpose of the Occupational Safety and Health Act by developing and maintaining an effective program of collection, compilation, analysis, and publication of occupational safety and health statistics consistent with the provisions of Secretary's Orders 4–81 and 5–95.

(2) Making grants to states or political subdivisions thereof in order to assist them in developing and administering programs dealing with occupational safety and health statistics under Sections 18, 23, and 24 of the Occupational Safety and Health Act.

(3) Coordinating the above functions with the Assistant Secretaries for Occupational Safety and Health and Employment Standards.

5. *Reservation of Authority and Responsibility.*

a. The submission of reports and recommendations to the President and the Congress concerning the administration of the statutory provisions and Executive Orders listed in subparagraph 4.a. above is reserved to the Secretary.

b. The commencement of legal proceedings under the statutory provisions listed in subparagraph 4.a. above, except proceedings before Department of Labor administrative law judges and the Administrative Review Board under 49 U.S.C. 31105 (the whistleblower provision of the Surface Transportation Assistance Act), is reserved to the Secretary. The Solicitor will determine in each case whether such legal proceedings are appropriate and may represent the Secretary in litigation as authorized by law.

c. Nothing in this Order shall limit or modify the delegation of authority and assignment of responsibility to the Administrative Review Board by Secretary's Order 2–96 (April 17, 1996).

6. *Redelegation of Authority.* The Assistant Secretary for Occupational Safety and Health, the Chief Financial Officer, the Assistant Secretary for Administration and Management, the Solicitor of Labor, and the Commissioner of Labor Statistics may redelegate authority delegated in this Order.

7. *Effective Date.* This delegation of authority and assignment of responsibility shall be effective on February 3, 1997.

Robert B. Reich,

Secretary of Labor.

[FR Doc. 96–33366 Filed 12–31–96; 8:45 am]

BILLING CODE 4510–23–M

LEGAL SERVICES CORPORATION

Sunshine Act Meeting of the Corporation's Board of Directors: Correction

In the meeting notice published on December 27, 1996 (61 FR 68304), please make the following correction to the agenda:

In item 13, change ''Consider and act on proposed policies and procedures for annual performance reviews of the Corporation's President and Inspector General'' to ''Consider and act on proposed policies and procedures relating to communications between the Corporation and the Congress.''

Dated: December 30, 1996.

Victor M. Fortuno,

General Counsel.

[FR Doc. 96–33389 Filed 12–30–96; 2:19 pm]

BILLING CODE 7050–01–P

LIBRARY OF CONGRESS

Copyright Office

[Docket No. 96–9 CARP]

Copyright Arbitration Royalty Panels; List of Arbitrators

AGENCY: Copyright Office, Library of Congress.

ACTION: Publication of the 1997 CARP Arbitration List.

SUMMARY: The Copyright Office is publishing the list of arbitrators eligible for selection to a Copyright Arbitration Royalty Panel (CARP) during 1997. This list will be used to select arbitrators who shall serve on panels initiated during 1997 for determining the distribution of royalty fees or the adjustment of royalty rates.

EFFECTIVE DATE: January 2, 1997.

FOR FURTHER INFORMATION CONTACT: Marilyn J. Kretsinger, Acting General Counsel, or Tanya M. Sandros, Attorney-Advisor, Copyright Arbitration Royalty Panel, P.O. Box 70977, Southwest Station, Washington, D.C. 20024. Telephone: (202) 707–8380. Telefax: (202) 707–8366.

SUPPLEMENTARY INFORMATION:

Background

For royalty rate adjustments and distributions that are in controversy, the Copyright Act requires the selection of a Copyright Arbitration Royalty Panel (CARP) consisting of three arbitrators from ''lists provided by professional arbitration associations.'' 17 U.S.C. 802(b). The Librarian selects two of the arbitrators for a CARP from a list of nominated arbitrators; those selected then choose a third person who serves as chairperson of the panel.

Under the CARP regulations, as amended, the Library of Congress shall publish in the Federal Register after January 1, 1998, and every two years thereafter, a list of between 30 and 75 names of those individuals who were nominated. The list must contain nominees from at least three professional arbitration associations or organizations. 61 FR 63715 (December 2, 1996). The change to a two-year list was implemented to reduce the cost associated with generating an annual list of arbitrators, most of whom would have no opportunity to serve on a CARP during the relevant year. In so amending the rule, the Office decided to use the 1996 list for any CARP proceeding initiated during 1997. Therefore, the Office is republishing the 1996 list of nominees to serve as the 1997 list of arbitrators.

The information submitted by the arbitration association with respect to each person listed is available for copying and inspection at the Licensing Division of the Copyright Office. The Licensing Division of the Copyright Office is located in the Library of Congress, James Madison Building, Room 458, 101 Independence Avenue, S.E., Washington, D.C. 20540.

Publication of today's list triggers the requirement in 37 CFR 251.32 that each listed person file a confidential financial

disclosure statement. The Librarian of Congress will use the financial disclosure statement to determine what conflicts of interest, if any, may preclude the person from serving as an arbitrator in a CARP proceeding. Since each of these nominees has already filed a financial disclosure form, he or she need not file an updated form unless the Library of Congress selects that individual for service on a CARP.

The 1997 CARP Arbitration List

Howard B. Abrams, Esq.—American Arbitration Association
Miles J. Alexander, Esq.—Center for Public Resources Inc.
Richard Bennett, Esq.—American Arbitration Association
The Honorable John W. Cooley—JAMS/Endispute
Robert A. Creo, Esq.—JAMS/Endispute
Joel Davidow, Esq.—American Arbitration Association
Edward Dreyfus, Esq.—American Arbitration Association
Corydon B. Dunham, Esq.—American Arbitration Association
The Honorable Lenore G. Ehrig—American Arbitration Association & Judicate, Inc.
The Honorable Jesse Etelson—Judicate, Inc.
John B. Farmakides, Esq.—American Arbitration Association
The Honorable Thomas A. Fortkort—Center for Litigation Alternatives
Richard G. Green, Esq.—American Arbitration Association
Joseph A. Greenwald, Esq.—American Arbitration Association
The Honorable Lewis Hall Griffith—Center for Litigation Alternatives
The Honorable Jeffrey S. Gulin, Esq.—Judicate, Inc.
Professor Hugh C. Hansen—Center for Litigation Alternatives
David C. Hilliard, Esq.—Center for Public Resources, Inc.
The Honorable Mel R. Jiganti—JAMS/Endispute
The Honorable William B. Lawless—''Judge-Net''
Michael K. Lewis, Esq.—Center for Public Resources, Inc.
The Honorable Reuben Lozner—Judicate
Steve A. Mains, Esq.—JAMS/Endispute
The Honorable H. Curtis Meanor—Center for Public Resources, Inc.
The Honorable James R. Miller—JAMS/Endispute
Charles B. Molineaux, Esq.—American Arbitration Association
The Honorable Timothy Murphy—Center for Litigation Alternatives
The Honorable Sharon T. Nelson—American Arbitration Association & Judicate
David W. Plant, Esq.—American Arbitration Association
The Honorable Kathleen A. Roberts—JAMS/Endispute
Peter Carey Schaumber, Esq.—American Arbitration Association
The Honorable Herbert Silberman—Judicate
Linda R. Singer, Esq.—Center for Public Resources, Inc.
John M. Townsend, Esq.—American Arbitration Association
The Honorable Ronald P. Wertheim—JAMS/Endispute & Judicate, Inc.
Bruce Zagaris, Esq.—American Arbitration Association

Dated: December 17, 1996.

Marybeth Peters,

Register of Copyrights.

[FR Doc. 96–32761 Filed 12–31–96; 8:45 am]

BILLING CODE 1410–33–P

MORRIS K. UDALL SCHOLARSHIP & EXCELLENCE IN NATIONAL ENVIRONMENTAL POLICY FOUNDATION

Sunshine Act Meeting

The Board of Trustees of the Morris K. Udall Scholarship & Excellence in National Environmental Policy Foundation will hold a meeting beginning at 9:00 a.m. on Friday, January 17, 1997, at the University of Arizona Main Library, Tucson, Arizona 85721.

The matters to be considered will include (1) A review of current budget matters; (2) Reports of on-going and planned Foundation programs; and (3) A report from the Udall Center for Studies and Public Policy. The meeting is open to the public.

CONTACT PERSON FOR MORE INFORMATION: Christopher L. Helms, 803 East First Street, Tucson, AZ 85719. Telephone (520) 670–5523.

Dated this 27th day of December, 1996.

Christopher L. Helms.

[FR Doc. 97–00029 Filed 12–30–96; 9:44 am]

BILLING CODE 6820–FN–M

NATIONAL SCIENCE FOUNDATION

Special Emphasis Panel in Advanced Scientific Computing; Notice of Meeting

In accordance with the Federal Advisory Committee Act (Pub. L. 92–463, as amended), the National Science Foundation announces the following meeting:

Name: Sepcial Emphasis Panel in Advanced Scientific Computing (#1185)

Date and Time: January 24, 1997, 8:30 am to 5:00 pm.

Place: National Science Foundation, 4201 Wilson Boulevard, Suite 1150, Arlington, VA 22230.

Type of Meeting: Closed.

Contact Person: Dr. John Van Rosendale, Program Director, New Technologies Program, Suite 1122, National Science Foundation, 4201 Wilson Boulevard, Arlington, VA 22230. (703) 306–1962.

Purpose of Meeting: To provide recommendations and advice concerning proposals submitted to NSF for financial support.

Agenda: Panel review of CISE Postdoctoral Research Associates in Computational Science and Engineering proposals as part of the selection process for awards.

Reason for Closing: The proposals being reviewed include information of a proprietary or confidential nature, including technical information; financial data, such as salaries; and personal information concerning individuals associated with the proposals. These matters are exempt under 5 U.S.C. 552b(c) (4) and (6) of the Government in the Sunshine Act.

Dated: December 27, 1996.

M. Rebecca Winkler,

Committee Management Officer.

[FR Doc. 96–33363 Filed 12–31–96; 8:45 am]

BILLING CODE 7555–01–M

Faculty Early Career Award Panel in Chemical and Transport Systems; Notice of Meetings

In accordance with the Federal Advisory Committee Act (Pub. L. 92–463, as amended), the National Science Foundation announces the following meeting:

Name: Special Emphasis Panel in Chemical and Transport Systems (#1190).

Date and Time: January 27, 1997; 8:30 a.m. to 5:00 p.m.

Place: National Science Foundation, 4201 Wilson Boulevard, Room 680, Arlington, VA 22230, (703) 306–1371.

Type of Meeting: Closed.

Contact Person: Dr. Raul Miranda, Program Director, Chemical Reaction Processes, Division of Chemical & Transport Systems (CTS), Room 525, (703) 306–1371.

Purpose of Meeting: To provide advice and recommendations concerning proposals submitted to NSF for financial support.

Agenda: To review and evaluate nominations for the FY97 Faculty Early Career Development Program proposals as part of the selection process for awards.

Reason for Closing: The proposals being reviewed include information of a proprietary or confidential nature, including technical information; financial data, such as salaries and personal information concerning individuals associated with the proposals. These matters are exempt under 5 U.S.C. 552b(c) (4) and (6) of the Government in the Sunshine Act.

Dated: December 27, 1996.

M. Rebecca Winkler,

Committee Management Officer.

[FR Doc. 96–33354 Filed 12–31–96; 8:45 am]

BILLING CODE 7555–01–M

Notice of Meeting

In accordance with the Federal Advisory Committee Act (Pub. L. 92–463, as amended), the National Science Foundation announces the following meeting.

Name and Committee Code: Special Emphasis Panel in Civil and Mechanical Systems.

Date and Time: Wednesday, January 29, 1997 & Thursday, January 30, 1997, 8:30 a.m. to 5:00 p.m.

Place: Rooms 530 & 580, National Science Foundation, 4201 Wilson Boulevard, Arlington, VA 22230.

Type of Meeting: Closed.

Contact Persons: Drs. Craig S. Hartley & Sunil Saigal, Program Directors, Mechanics and Materials Program. National Science Foundation, 4201 Wilson Boulevard, Arlington, VA 22230. Telephone: (703) 306–1361.

Purpose of Meeting: To provide advice and recommendations concerning proposals submitted to NSF for financial support.

Agenda: To review and evaluate Career proposals as part of the selection process for awards.

Reason for Closing: The proposals being reviewed include information of a proprietary or confidential nature, including technical information; financial data, such as salaries and personal information concerning individuals associated with the proposals. These matters are exempt under 5 U.S.C. 552b(c) (4) and (6) of the Government in the Sunshine Act.

Dated: December 27, 1996.

M. Rebecca Winkler,

Committee Management Officer.

[FR Doc. 96–33358 Filed 12–31–96; 8:45 am]

BILLING CODE 7555–01–M

Special Emphasis Panel in Electrical and Communications Systems; Notice of Meeting

In accordance with the Federal Advisory Committee Act (Pub. L. 92–463, as amended), the National Science Foundation announces the following meeting:

Name: Special Emphasis Panel in Electrical and Communications System.

Date and Time: January 27, 1997; 8:30 a.m. to 5:00 p.m.

Place: Room 630, NSF, 4201 Wilson Boulevard, Arlington, VA 22230.

Type of Meeting: Closed.

Contact Person(s): Dr. Deborah Crawford, Program Director, Solid State and Microstructures, Division of Electrical and Communications Systems, NSF, 4201 Wilson Boulevard, Room 675, Arlington, VA 22230, Telephone: (703) 306–1339.

Purpose: To provide advice and recommendations concerning proposals submitted to NSF for financial support.

Agenda: To review and evaluate REG proposals in the QEWB program as part of the selection process for awards.

Reason for Closing: The proposals being reviewed include information of a proprietary or confidential nature, including technical information; financial data, such as salaries; and personal information concerning individuals associated with the proposals. These matters are within exemptions 4 and 6 of 5 U.S.C. 552 b. (c) (4) and (6) the Government in the Sunshine Act.

Dated: December 27, 1996.

M. Rebecca Winkler,

Committee Management Officer.

[FR Doc. 96–33353 Filed 12–31–96; 8:45 am]

BILLING CODE 7555–01–M

Special Emphasis Panel in Electrical and Communications Systems; Notice of Meeting

In accordance with the Federal Advisory Committee Act (Pub. L. 92–463, as amended), the National Science Foundation announces the following meeting.

Name and Committee Code: Special Emphasis Panel in Electrical and Communications Systems (1196).

Date and Time: January 31, 1997.

Place: Room 380, National Science Foundation, 4201 Wilson Boulevard, Arlington, VA 22230.

Type of Meeting: Closed.

Contact Person: Dr. Paul Werbos, Program Director, Division of Electrical and Communications Systems, National Science Foundation, 4201 Wilson Boulevard, Room 675, Arlington, VA 22230, Telephone: (703) 306–1340.

Purpose of Meeting: To provide advice and recommendations concerning proposals submitted to NSF for financial support.

Agenda: To review and evaluate Neuroengineering Career and Regular proposals as part of the selection process for awards.

Reason for Closing: The proposals being reviewed include information of a proprietary or confidential nature, including technical information; financial data, such as salaries and personal information concerning individuals associated with the proposals. These matters are exempt under 5 U.S.C. 552b(c) (4) and (6) of the Government in the Sunshine Act.

Dated: December 27, 1996.

M. Rebecca Winkler,

Committee Management Officer.

[FR Doc. 96–33357 Filed 12–31–96; 8:45 am]

BILLING CODE 7555–01–M

Special Emphasis Panel in Information, Robotics and Intelligent Systems; Notice of Meeting

In accordance with the Federal Advisory Committee Act (Pub. L. 92–463, as amended), the National Science Foundation announces the following meeting.

Name: Special Emphasis Panel in Information, Robotics and Intelligent (1200).

Date and Time: February 6–7, 1997, 8:30 a.m. to 5:00 p.m.

Place: National Science Foundation, 4201 Wilson Boulevard, Room 360, Arlington, VA 22230.

Type of Meeting: Closed.

Contact Person: Dr. Maria Zemankova, Deputy Division Director, National Science Foundation, 4201 Wilson Blvd., Arlington, VA 22230. Telephone: (703) 306–1929.

Purpose of Meeting: To provide advice and recommendations concerning proposals submitted to NSF for financial support.

Agenda: To review and evaluate Information Technology and Organizations Program Career proposals as part of the selection process for awards.

Reason for Closing: The proposals being reviewed include information of a proprietary or confidential nature, including technical information; financial data, such as salaries; and personal information concerning individuals associated with the proposals.

These matters are exempt under 5 U.S.C. 552b(c) (4) and (6) of the Government in the Sunshine Act.

Dated: December 18, 1996.

M. Rebecca Winkler,

Committee Management Officer.

[FR Doc. 96–33360 Filed 12–31–96; 8:45 am]

BILLING CODE 7555–01–M

Special Emphasis Panel in Information, Robotics and Intelligent Systems; Notice of Meeting

In accordance with the Federal Advisory Committee Act (Pub. L. 92–463, as amended), the National Science Foundation announces the following meeting.

Name: Special Emphasis Panel in Information, Robotics and Intelligent Systems (1200).

Date and Time: February 3–4, 1997, 8:30 a.m. to 5:00 p.m.

Place: National Science Foundation, 4201 Wilson Boulevard, Room 1120, Arlington, VA 22230.

Type of Meeting: Closed.

Contact Person: Dr. Maria Zemankova, Deputy Division Director, National Science Foundation, 4201 Wilson Blvd., Arlington, VA 22230. Telephone: (703) 306–1929.

Purpose of Meeting: To provide advice and recommendations concerning proposals submitted to NSF for financial support.

Agenda: To review and evaluate Database and Expert Systems Program Career proposals as part of the selection process for awards.

Reason for Closing: The proposals being reviewed include information of a proprietary or confidential nature, including technical information; financial data, such as salaries; and personal information concerning individuals associated with the proposals.

These matters are exempt under 5 U.S.C. 552b(c) (4) and (6) of the Government in the Sunshine Act.

Dated: December 18, 1996.

M. Rebecca Winkler,

Committee Management Officer.

[FR Doc. 96–33361 Filed 12–31–96; 8:45 am]

BILLING CODE 7555–01–M

Special Emphasis Panel in Information, Robotics and Intelligent Systems; Notice of Meeting

In accordance with the Federal Advisory Committee Act (Pub. L. 92–463, as amended), the National Science Foundation announces the following meeting.

Name: Special Emphasis Panel in Information, Robotics and Intelligent Systems (1200).

Date and Time: February 3–4, 1997, 8:30 a.m. to 5:00 p.m.

Place: National Science Foundation, 4201 Wilson Boulevard, Room 1115N, Arlington, VA 22230.

Type of Meeting: Closed.

Contact Person: Dr. Maria Zemankova, Deputy Division Director, National Science Foundation, 4201 Wilson Blvd., Arlington, VA 22230. Telephone: (703) 306–1929.

Purpose of Meeting: To provide advice and recommendations concerning proposals submitted to NSF for financial support.

Agenda: To review and evaluate Robotics and Machine and Intelligence Program proposals as part of the selection process for awards.

Reason for Closing: The proposals being reviewed include information of a proprietary or confidential nature, including technical information; financial data, such as salaries; and personal information concerning individuals associated with the proposals. These matters are exempt under 5 U.S.C. 55b(c) (4) and (6) of the Government in the Sunshine Act.

Dated: December 18, 1996.

M. Rebecca Winkler,

Committee Management Officer.

[FR Doc. 96–33362 Filed 12–31–96; 8:45 am]

BILLING CODE 7555–01–M

Special Emphasis Panel in International Programs; Notice Of Meeting

In accordance with the Federal Advisory Committee Act (Pub. L. 92–463, as amended), the National Science Foundation announces the following meeting.

Name: Special Emphasis Panel in International Programs (1201).

Date and Time: January 27–28, 1997; 8:30 a.m. to 5:00 p.m.

Place: Room 360.

Type of Meeting: Closed.

Contact Person: Susan Parris, Program Specialist or Randall Soderquist, Program Manager, Division of International Programs, Room 935, National Science Foundation, 4201 Wilson Boulevard, Arlington, VA 22230, Telephone (703) 306–1706.

Purpose of Meeting: To provide advice and recommendations concerning proposals submitted to NSF for financial support.

Agenda: To review and evaluate research proposals submitted to the Division of International Programs' International Research Fellow Awards Program as part of the selection process for awards.

Reason for Closing: The meeting is closed to the public because the proposals being reviewed include information of a proprietary or confidential nature, including technical information; financial data, such as salaries; and personal information concerning individuals associated with the proposals. These matters are exempt under 5 U.S.C. 552b(c) (4) and (6) of the Government in the Sunshine Act.

Dated: December 27, 1996.

M. Rebecca Winkler,

Committee Management Officer.

[FR Doc. 96–33352 Filed 12–31–96; 8:45 am]

BILLING CODE 7555–01–M

Special Emphasis Panel in Materials Research; Notice of Meeting

In accordance with the Federal Advisory Committee Act (Pub. L. 92–463 as amended), the National Science Foundation announces the following meeting:

Name: Special Emphasis Panel in Materials Research (DMR).

Date and Time: January 24, 1997, 8:00 am–5:00 pm.

Place: National Science Foundation, 4201 Wilson Boulevard, Room 1060, Arlington, VA 22230.

Type of Meeting: Closed.

Contact Person: Dr. Bruce A. MacDonald, Program Director, Division of Materials Research, Room 1065, National Science Foundation, 4201 Wilson Boulevard, Arlington, VA 22230, Telephone (703) 306–1835.

Purpose of Meeting: To provide advice and recommendations concerning proposals submitted to NSF for financial support.

Agenda: To review and evaluate proposals submitted to the Faculty Early Career Development (CAREER) Program.

Reason for Closing: The proposal being reviewed may include information of a proprietary or confidential nature, including technical information, financial data such as salaries, and personal information concerning individuals associated with the proposal. These matters are exempt under 5 U.S.C. 552b (c) (4) and (6) of the Government in the Sunshine Act.

Dated: December 27, 1996.

M. Rebecca Winkler,

Committee Management Officer.

[FR Doc. 96–33351 Filed 12–31–96; 8:45 am]

BILLING CODE 7555–01–M

Special Emphasis Panel in Materials Research; Notice of Meeting

In accordance with the Federal Advisory Committee Act (Pub. L. 92–463 as amended), the National Science Foundation announces the following meetings:

Name: Special Emphasis Panel in Materials Research # 1203.

Dates and Times: 1/28–29/97, 8:00 am–6:00 pm and 1/30–31/97, 8:00 am–5:00 pm.

Place: National Science Foundation, 4201 Wilson Boulevard, Rooms 320 & 340 and 380 & 390, Arlington, VA 22230.

Type of Meeting: Closed.

Contact Person: Dr. Ulrich Strom, Program Director, Division of Materials Research, Room 1065, National Science Foundation, 4201 Wilson Boulevard, Arlington, VA 22230, Telephone (703) 306–1832.

Purpose of Meeting: To provide advice and recommendations concerning CAREER proposals submitted to the Condensed Matter Physics Program.

Agenda: Evaluation of proposal.

Reason for Closing: The proposal being reviewed includes information of a proprietary or confidential nature, including technical information, financial data such as salaries, and personal information concerning individuals associated with the proposal. These matters are exempt under 5 U.S.C. 552b(c) (4) and (6) of the Government in the Sunshine Act.

Dated: December 27, 1996.

M. Rebecca Winkler,

Committee Management Officer.

[FR Doc. 96–33359 Filed 12–31–96; 8:45 am]

BILLING CODE 7555–01–M

Special Emphasis Panel in Mathematical Sciences; Notice of Meeting

In accordance with the Federal Advisory Committee Act (Pub. L. 92–463, as amended), the National Science Foundation announces the following meeting.

Name: Special Emphasis Panel in Mathematical Sciences (1204)

Date and Time: January 30 to February 1, 1997, 8:30 am–5:00 p.m.

Place: Rooms 340 and 360 National Science Foundation, 4201 Wilson Boulevard, Arlington, VA 22230

Type of Meeting: Closed:

Contact Person: S.I. Hariharan, Applied Mathematics Program, Program Officer, Room 1025 National Science Foundation, 4201 Wilson Boulevard, Arlington, VA 22230. Telephone: (703) 306–1870.

Purpose of Meeting: To provide advice and recommendations concerning applications submitted to NSF for financial support.

Agenda: To review and evaluate proposals in the mathematics of fluids as part of the selection process for awards.

Reason for Closing: The proposals being reviewed include information of a proprietary or confidential nature, including technical information; financial data, such as salaries and personal information concerning individuals associated with the proposals. These matters are exempt under 5 U.S.C. 552b(c) (4) and (6) of the Government in the Sunshine Act.

Dated: December 27, 1996.

M. Rebecca Winkler,

Committee Management Officer.

[FR Doc. 96–33356 Filed 12–31–96; 8:45 am]

BILLING CODE 7555–01–M

Special Emphasis Panel in Polar Programs; Notice of Meeting

In accordance with the Federal Advisory Committee Act (Pub. L. 92–463, as amended), the National Science Foundation announces the following meeting.

Name and Committee Code: Special Emphasis Panel in Polar Programs (#1209).

Date and Time: January 30 & 31, 1997: 8:00 AM to 5:00 PM.

Place: Room 770, National Science Foundation, 4201 Wilson Boulevard, Arlington, VA 22230.

Type of Meeting: Closed.

Contact Person: Dr. Michael Ledbetter, Program Director, Arctic System Sciences Program, Office of Polar Programs, Room 755 National Science Foundation, 4201 Wilson Boulevard, Arlington, VA 22230. Telephone: (703) 306–1029.

Purpose of Meeting: To provide advice and recommendations concerning proposals submitted to NSF for financial support.

Agenda: To review and evaluate *Arctic System Sciences SHEBA* proposals as part of the selection process for awards.

Reason for Closing: The proposals being reviewed include information of a proprietary or confidential nature, including technical information; financial data, such as salaries and personal information concerning individuals associated with the proposals. These matters are exempt under 5 U.S.C. 552b(c) (4) and (6) of the Government in the Sunshine Act.

Dated: December 27, 1996.

M. Rebecca Winkler,

Committee Management Officer.

[FR Doc. 96–33355 Filed 12–31–96; 8:45 am]

BILLING CODE 7555–01–M

NUCLEAR REGULATORY COMMISSION

Commonwealth of Massachusetts: Staff Assessment of Proposed Agreement Between the Nuclear Regulatory Commission and the Commonwealth of Massachusetts

AGENCY: Nuclear Regulatory Commission.

ACTION: Notice of proposed Agreement with the Commonwealth of Massachusetts.

SUMMARY: The U. S. Nuclear Regulatory Commission (NRC) has received, from the Governor of the Commonwealth of Massachusetts, a proposal to enter into an Agreement pursuant to Section 274 of the Atomic Energy Act of 1954, as amended (Act). The proposed Agreement would permit Massachusetts to assume certain portions of the Commission's regulatory authority. As required by the Act, NRC is publishing the proposed Agreement for public comment. NRC is also publishing a summary of the NRC staff assessment of the proposed Massachusetts radiation control program. Comments are requested on the proposed Agreement, especially public health and safety aspects, and the assessment.

The Agreement will effectively release (exempt) persons in Massachusetts from certain portions of the Commission's regulatory authority. The Act also requires that NRC publish those exemptions. Notice is hereby given that the pertinent exemptions have been previously published in the Federal Register and are codified in the Commission's regulations as 10 CFR Part 150.

DATES: The comment period expires January 23, 1997.

Comments received after this date will be considered if it is practical to do so, but the Commission is able to assure consideration only for comments received on or before this date.

ADDRESSES: Written comments may be submitted to Mr. David L. Meyer, Chief, Rules Review and Directives Branch, Division of Freedom of Information and Publications Services, Office of Administration, Washington, DC 20555–0001. Copies of comments received by NRC may be examined at the NRC Public Document Room, 2120 L Street, NW. (Lower Level), Washington, DC. Copies of the proposed Agreement, along with copies of the request by Governor Weld including referenced enclosures, applicable legislation, regulations for the control of radiation, and the full text of the NRC staff assessment are also available for public inspection in the NRC's Public Document Room.

FOR FURTHER INFORMATION CONTACT: Richard L. Blanton, Office of State Programs, U.S. Nuclear Regulatory Commission, Washington, DC 20555–0001. Telephone (301) 415–2322 or e-mail RLB@NRC.GOV.

SUPPLEMENTARY INFORMATION: The Commission has received a request from Governor William Weld of Massachusetts to enter into an Agreement whereby the NRC would discontinue, and the Commonwealth would assume, certain regulatory authority as specified in the Act. Section 274 of the Act authorizes the Commission to enter into such an agreement.

Section 274e of the Act requires that the terms of the proposed Agreement be published for public comment once each week for four consecutive weeks. This notice is being published in the Federal Register in fulfillment of the requirement.

I. Background

(a) Section 274d of the Act provides the mechanism whereby a State may assume regulatory authority, otherwise reserved to the NRC, over certain radioactive materials [1] and uses thereof. In a letter dated March 28, 1996, Governor Weld certified that the Commonwealth of Massachusetts has a program for the control of radiation hazards that is adequate to protect health and safety of the public within the Commonwealth with respect to the materials covered by the proposed Agreement, and that the Commonwealth desires to assume regulatory responsibility for these materials. Included with the letter was the text of the proposed Agreement, which is shown in Appendix A to this notice.

The specific authorities requested by the Commonwealth of Massachusetts under this proposed Agreement are (1) the regulation of byproduct materials as defined in Section 11e.(1) of the Act, (2) the regulation of source materials, (3) the regulation of special nuclear materials in quantities not sufficient to form a critical mass, (4) the evaluation of the safety of sealed sources and devices (containing materials covered by the Agreement) for distribution in interstate commerce, and (5) the land disposal of low-level radioactive waste

[1] The materials, sometimes referred to as ''agreement materials,'' are: (a) Byproduct materials as defined in Section 11e.(1) of the Act; (b) Byproduct materials as defined in Section 11e.(2) of the Act; (c) Source materials as defined in Section 11z. of the Act; and (d) Special nuclear materials as defined in Section 11aa. of the Act, restricted to quantities not sufficient to form a critical mass.

(as defined in the Low-Level Radioactive Waste Policy Amendments Act of 1985, 42 U.S.C. 2021b) received from other persons. The Commonwealth does not wish to assume authority over the regulation of byproduct materials as defined in Section 11e.(2) of the Act, that is over tailings from the recovery of source materials from ore, but does reserve the right to apply at a future date for an amended agreement to assume authority in this area.

(b) The proposed agreement contains nine articles that (1) list the materials and activities to be covered by the Agreement; (2) specify the activity for which the Commission will retain regulatory authority; (3) allow for future amendment of the Agreement; (4) allow for certain regulatory changes by the Commission; (5) reference the continued authority of the Commission for purposes of safeguarding nuclear materials and restricted data; (6) commit the Commonwealth and NRC to exchange information necessary to maintain coordinated and compatible programs; (7) recognize reciprocity of licenses issued by the respective agencies; (8) identify criteria for the suspension or termination of the Agreement; and (9) specify the proposed effective date. The Commission reserves the option to modify the terms of the proposed Agreement in response to comments, to correct errors, and to make editorial changes in style. Also, because of several issues posed by this request which required resolution before the Agreement could be concluded, the effective date requested by the Governor could not be realized. The final text of the Agreement, with the actual effective date, will be published after the Agreement is approved by the Commission.

(c) The Massachusetts radiation control program currently regulates users of naturally-occurring and accelerator-produced radioactive materials, and users of certain radiation-producing electronic machines. The program was enabled by Massachusetts law (Massachusetts General Law [M.G.L.] Chapter 111, § 5B) in 1958. This statute was later replaced by M.G.L. Chapter 111, Sections 5M through 5P. In 1987, M.G.L. Chapter 111H was added to provide for the regulation of low-level radioactive waste. Section 7 of the legislation contains the authority for the Governor to enter into an Agreement with the Commission.

The Massachusetts regulations contain provisions for the orderly transfer of authority over NRC licenses to the regulatory control of the Commonwealth. After the effective date of this proposed Agreement, licenses issued by NRC will continue in effect under Massachusetts regulatory authority until these licenses expire or are replaced by Commonwealth issued licenses.

(d) The NRC staff assessment finds the proposed Massachusetts program adequate to protect public health and safety, and compatible with the NRC program for materials regulation.

II. Summary of the NRC Staff Assessment of the Massachusetts Program for the Control of Agreement Materials

NRC staff has examined the proposed Massachusetts radiation control program with respect to the ability of the program to regulate agreement materials. The examination was based on the Commission's policy statement *''Criteria for Guidance of States and NRC in Discontinuance of NRC Regulatory Authority and Assumption Thereof by States Through Agreement''* (referred to herein as the ''criteria'') (46 FR 7540; January 23, 1981, as amended).

(a) *Organization and Personnel.* The proposed program unit responsible for regulating agreement materials will consist of 13 technical/professional positions within the existing radiation control program of the Massachusetts Department of Public Health. The qualifications for staff members specified in the personnel position descriptions, and the qualifications of the current staff members, meet the criteria for education, training and experience. All current staff members hold at least bachelor's degrees in physical or life sciences, or have a combination of education and experience at least equivalent to a bachelor's degree. Most staff members hold advanced degrees, and have had additional training and experience in radiation protection. Senior staff have more than five years experience each in radiation control programs. The program director has a master's degree in public health and 15 years experience in regulatory health physics.

(b) *Legislation and Regulations.* The Massachusetts Department of Public Health is designated by statute to be the radiation control agency. The Department is provided by statute with the authority to promulgate regulations, issue licenses, issue orders, conduct inspections, and to enforce compliance with regulations, license conditions, and orders. Licensees are required by law to provide access to inspectors.

The Department has adopted regulations (Massachusetts Regulations for the Control of Radiation or MRCR) providing radiation protection standards essentially identical to the standards in 10 CFR Part 20. Technical definitions in the MRCR are also essentially identical. The MRCR require consideration of the total radiation doses to individuals from all sources of radiation (except background radiation and radiation from medical treatment or examinations, as is the case in the NRC rules), whether the sources are in the possession of the licensee or not. The MRCR also require appropriate surveys and personnel monitoring under the close supervision of technically competent people, and the use of radiation labels, signs and symbols essentially identical to those contained in 10 CFR Part 20. Posting requirements and instruction of workers requirements adopted in the MRCR are compatible with the equivalent current requirements of the NRC.

Nothing in the Massachusetts statutes or regulations seeks to regulate areas not permitted by the Atomic Energy Act. The MRCR contain a provision to avoid interference with those regulatory requirements imposed by NRC pursuant to the Act, and for which Commonwealth licensees have not been exempted under the agreement.

(c) *Storage and Disposal.* The MRCR also contain compatible requirements for the storage of radioactive material, and for the disposal of radioactive material as waste. The waste disposal requirements cover both waste disposal by material users and the land disposal of waste received from other persons. The NRC staff noted some differences in the MRCR waste regulations as compared to the NRC regulations in 10 CFR Part 61, but determined that the differences are related either to the prohibition of shallow land burial as a disposal technology or to the ownership of the disposal site by the Massachusetts Low-Level Radioactive Waste Management Board. Because of these special provisions, NRC staff determined that the differences in the regulations do not reduce the ability of the Massachusetts radiation control program to protect health and safety, nor reduce the compatibility of the program or the regulations themselves.

(d) *Transportation of Radioactive Material.* The MRCR contains rules equivalent to 10 CFR Part 71 as in effect prior to April 1, 1996. Effective on that date, the NRC amended Part 71. Under current policy, an existing Agreement State is allowed up to three years after NRC adopts a final rule to adopt a compatible rule, or to impose each regulatory provision of the rule using an alternate legally binding requirement (LBR), such as an order or license condition. A State seeking an agreement

is expected to have effective rules or LBRs compatible with those of NRC in effect at the time the agreement becomes effective. The intent of this expectation is to spare licensees in the new Agreement State from the ''whipsaw'' effect of being subjected first to the new NRC requirements, then the old requirements when the agreement takes effect, then again to the new requirements when later adopted by the State. Massachusetts is in the process of adopting rules compatible with the revised 10 CFR Part 71. However, these rules may not become effective before the Agreement is signed. Massachusetts intends to impose the requirements of the new Part 71 rules in the interim by issuing appropriate orders to the affected licensees.

(e) *Recordkeeping and Incident Reporting.* The MRCR incident reporting requirements are similar to the requirements in the NRC rules. The NRC staff noted that for some NRC rules that specify a records retention period of less than five years, the retention period specified in the MRCR is shorter. The NRC staff concluded, however, that the retention periods specified in the MRCR rules are adequate since the retention periods are long enough to permit examination of the records during routine inspections. The MRCR imposes retention requirements similar to the NRC rules for records which must be retained indefinitely or until the license is terminated.

(f) *Evaluation of License Applications.* The MRCR contains requirements equivalent to the current NRC regulations specifying the required content of applications for licenses, renewals, and amendments. The MRCR also provide requirements equivalent to the NRC requirements for issuing licenses and specifying the terms and conditions of licenses. The agreement materials program unit has adopted a procedure for processing applications that assures the regulatory requirements will be met, or, if appropriate, exceptions granted. The program unit has the authority by Statute to impose requirements in addition to the requirements specified in the regulations. The program unit also retains by regulation the authority to grant specific exemptions from the requirements of the regulations. The MRCR specifies qualifications for the use of radioactive materials in or on humans that are similar to the NRC requirements in 10 CFR Part 35.

The Massachusetts licensing procedures manual, along with the accompanying regulatory guides, are adapted from similar NRC documents and contain adequate guidance for the agreement materials program unit staff to use when evaluating license applications.

(g) *Inspections and Enforcement.* The Massachusetts radiation control program has adopted a schedule providing for the inspection of licensees as frequently as, or more frequently than, the inspection schedule used by NRC. The agreement materials program unit has adopted procedures for the conduct of inspections, the reporting of inspection findings, and the report of inspection results to the licensees. The program has also adopted procedures for enforcement in the MRCR.

(h) *Regulatory Administration.* The Massachusetts Department of Public Health is bound by procedures specified in Commonwealth statute for rulemaking. The program has adopted procedures to assure fair and impartial treatment of license applicants.

(i) *Cooperation with Other Agencies.* The MRCR deems the holder of an NRC license on the effective date of the Agreement to possess a like license issued by Massachusetts. The MRCR provides that these former NRC licenses will expire either 90 days after receipt from the radiation control program of a notice of expiration of such license or on the date of expiration specified in the NRC license, whichever is earlier. The MRCR also provides for ''timely renewal.'' This provision affords the continuance of licenses for which an application for renewal has been filed more than 30 days prior to the date of expiration of the license. Licenses in timely renewal are not excluded from the transfer continuation provision. The MRCR provide exemptions from the Commonwealth's requirements for licensing of sources of radiation for NRC and U.S. Department of Energy contractors or subcontractors.

The Department of Public Health and the Department of Labor and Industries have entered into a Memorandum of Understanding, as authorized elsewhere in Massachusetts law, which provides for the Department of Public Health to exercise the responsibility and authority of the Department of Labor and Industries with respect to radiation and radioactive materials. The Department of Environmental Protection is designated as the agency to adopt the suitability standards for any proposed disposal site under the Massachusetts Low-Level Radioactive Waste Management Act. The Department of Public Health will license and regulate the site only after the Executive Secretary for Environmental Affairs has determined that the report on the site characterization study is in conformance with the suitability standards, and the Low-Level Radioactive Waste Management Board has selected the operator.

The proposed Agreement commits the Commonwealth to use its best efforts to cooperate with the NRC and the other Agreement States in the formulation of standards and regulatory programs for the protection against hazards of radiation and to assure that the Commonwealth's program will continue to be compatible with the Commission's program for the regulation of like materials. The proposed Agreement stipulates the desirability of reciprocal recognition of licenses, and commits the Commission and the Commonwealth to use their best efforts to accord such reciprocity.

III. Staff Conclusion

Subsection 274d of the Act provides that the Commission shall enter into an agreement under subsection 274b with any State if:

(a) The Governor of the State certifies that the State has a program for the control of radiation hazards adequate to protect public health and safety with respect to the materials within the State covered by the proposed Agreement, and that the State desires to assume regulatory responsibility for such materials; and

(b) The Commission finds that the State program is in accordance with the requirements of Subsection 274o, and in all other respects compatible with the Commission's program for the regulation of such materials, and that the State program is adequate to protect public health and safety with respect to the materials covered by the proposed Agreement.

On the basis of its assessment, the NRC staff has concluded that the Commonwealth of Massachusetts meets the requirements of Section 274 of the Act. The Commonwealth's statutes, regulations, personnel, licensing, inspection, and administrative procedures are compatible with those of the Commission and adequate to protect public health and safety with respect to the materials covered by the proposed Agreement. Since the Commonwealth is not seeking authority over byproduct material as defined in Section 11e.(2) of the Act, Subsection 274o is not applicable to the proposed Agreement. The language of the Agreement requested by Governor Weld has been revised to reflect that the effective date of the proposed Agreement and the location at which it will be signed remain to be determined. Certain conventions have been used to highlight the proposed revisions. New language is shown inside boldfaced arrows, while

language that would be deleted is set off with brackets.

IV. Small Business Regulatory Enforcement Fairness Act

In accordance with the Small Business Regulatory Enforcement Fairness Act of 1996, the NRC has determined that this action is not a major rule and has verified this determination with the Office of Information and Regulatory Affairs of the Office of Management and Budget (OMB).

Dated at Rockville, Maryland, this 19th day of December 1996.

For the U.S. Nuclear Regulatory Commission.

Paul H. Lohaus,

Acting Director, Office of State Programs.

Appendix A—Proposed Agreement

Agreement Between the United States Nuclear Regulatory Commission and the Commonwealth of Massachusetts for the Discontinuance of Certain Commission Regulatory Authority and Responsibility Within the Commonwealth Pursuant to Section 274 of the Atomic Energy Act of 1954, as Amended

Whereas, The United States Nuclear Regulatory Commission (hereinafter referred to as the Commission) is authorized under Section 274 of the Atomic Energy Act of 1954, as amended (hereinafter referred to as the Act), to enter into agreements with the Governor of any State providing for discontinuance of the regulatory authority of the Commission within the State under Chapters 6, 7, and 8, and Section 161 of the Act with respect to by-product materials as defined in Sections 11e.(1) and (2) of the Act, source materials, and special nuclear materials in quantities not sufficient to form a critical mass; and,

Whereas, The Governor of the Commonwealth of Massachusetts is authorized under Massachusetts General Laws, Chapter 111H, to enter into this Agreement with the Commission; and,

Whereas, The Governor of the Commonwealth of Massachusetts certified on [June 1, 1995,] >March 28, 1996,< that the Commonwealth of Massachusetts (hereinafter referred to as the Commonwealth) has a program for the control of radiation hazards adequate to protect [the] public health and safety with respect to the materials within the Commonwealth covered by this Agreement, and that the Commonwealth desires to assume regulatory responsibility for such materials; and,

Whereas, The Commission found on [November 1, 1995,] >(date to be determined)< that the program of the Commonwealth for the regulation of the materials covered by this Agreement is compatible with the Commission's program for the regulation of such materials and is adequate to protect public health and safety; and,

Whereas, The Commonwealth and the Commission recognize the desirability and importance of cooperation[s] between the Commission and the Commonwealth in the formulation of standards for protection against hazards of radiation and in assuring that Commonwealth and Commission programs for protection against hazards of radiation will be coordinated and compatible; and,

Whereas, The Commission and the Commonwealth recognize the desirability of reciprocal recognition of licenses and exemptions from licensing of those materials subject to this Agreement; and,

Whereas, This Agreement is entered into pursuant to the provisions of the Atomic Energy Act of 1954, as amended;

Now, Therefore, It is hereby agreed between the Commission and the Governor of the Commonwealth, acting in behalf of the Commonwealth, as follows:

Article I

Subject to the exceptions provided in Articles II, IV, and V, the Commission shall discontinue, as of the effective date of this Agreement, the regulatory authority of the Commission in the Commonwealth under Chapters 6, 7, and 8, and Section 161 of the Act with respect to the following materials:

A. By-product materials as defined in Section 11e.(1) of the Act;

B. Source materials;

C. Special nuclear materials in quantities not sufficient to form a critical mass; and,

D. Licensing of Low-Level Radioactive Waste Facilities.

Article II

This Agreement does not provide for discontinuance of any authority and the Commission shall retain authority and responsibility with respect to regulation of:

A. The construction and operation of any production or utilization facility;

B. The export from or import into the United States of by-product, source, or special nuclear material, or of any production or utilization facility;

C. The disposal into the ocean or sea of by-product, source, or special nuclear waste materials as defined in regulations or orders of the Commission;

D. The disposal of such other by-product, source, or special nuclear material as the Commission from time to time determines by regulation or order should, because of the hazards or potential hazards thereof, not be so disposed of without a license from the Commission; and,

E. The extraction or concentration of source material from source material ore and the management and disposal of the resulting by-product material.

Article III

This Agreement may be amended, upon application by the Commonwealth and approval by the Commission, to include the additional area(s) specified in Article II, paragraph E, whereby the Commonwealth can exert regulatory control over the materials stated therein.

Article IV

Notwithstanding this Agreement, the Commission may from time to time by rule, regulation, or order, require that the manufacturer, processor, or producer of any equipment, device, commodity, or other product containing source, by-product, or special nuclear material shall not transfer possession or control of such product except pursuant to a license or an exemption from licensing issued by the Commission.

Article V

This Agreement shall not affect the authority of the Commission under Subsection 161b or 161i of the Act to issue rules, regulations, or orders to protect the common defense and security, to protect restricted data or to guard against the loss or diversion of special nuclear material.

Article VI

The Commission will use its best efforts to cooperate with the Commonwealth and other Agreement States in the formulation of standards and regulatory programs of the Commonwealth and the Commission for protection against hazards of radiation and to assure that Commonwealth and Commission programs for protection against hazards of radiation will be coordinated and compatible. The Commonwealth will use its best efforts to cooperate with the Commission and other Agreement States in the formulation of standards and regulatory programs of the Commonwealth and the Commission for protection against hazards of radiation and to assure that the Commonwealth's program will continue to be compatible with the program of the Commission for the regulation of like materials. The Commonwealth and the Commission

will use their best efforts to keep each other informed of proposed changes in their respective rules and regulations and licensing, inspection and enforcement policies and criteria, and to obtain the comments and assistance of the other party thereon.

Article VII

The Commission and the Commonwealth agree that it is desirable to provide reciprocal recognition of licenses for the materials listed in Article I licensed by the other party or by any other Agreement State. Accordingly, the Commission and the State agree to use their best efforts to develop appropriate rules, regulations, and procedures by which such reciprocity will be accorded.

Article VIII

The Commission, upon its own initiative after reasonable notice and opportunity for hearing to the Commonwealth, or upon request of the Governor of the Commonwealth, may terminate or suspend all or part of this Agreement and reassert the licensing and regulatory authority vested in it under the Act if the Commission finds that (1) such termination or suspension is required to protect public health and safety, or (2) the Commonwealth has not complied with one or more of the requirements of Section 274 of the Act. The Commission may also, pursuant to Section 274j of the Act, temporarily suspend all or part of this Agreement if, in the judgement of the Commission, an emergency situation exists requiring immediate action to protect public health and safety and the Commonwealth has failed to take necessary steps. The Commission shall periodically review this Agreement and actions taken by the Commonwealth under this Agreement to ensure compliance with Section 274 of the Act.

Article IX

This Agreement shall become effective on [April 24, 1996,] >(date to be determined)< and shall remain in effect unless and until such time as it is terminated pursuant to Article VIII.

Done at [Boston, Massachusetts] >(location to be determined)<, in triplicate, this [24]th Day of [April, 1996] >(date to be determined)<.

For the United States Nuclear Regulatory Commission.

Shirley Ann Jackson,

Chairman.

For the Commonwealth of Massachusetts.

William F. Weld,

Governor.

[FR Doc. 96–33252 Filed 12–31–96; 8:45 am]

BILLING CODE 7590–01–P

Sunshine Act Meeting

DATE: Weeks of December 30, 1996 and January 6, 13, and 20, 1997.

PLACE: Commissioners' Conference Room, 11555 Rockville Pike, Rockville, Maryland.

STATUS: Public and Closed.

MATTERS TO BE CONSIDERED:

Week of December 30

There are no meetings scheduled for the Week of December 30.

Week of January 6–Tentative

Tuesday, January 7

9:30 a.m. Briefing on Investigative Matters (Closed—Ex. 5 & 7)

2:00 p.m. Discussion of Procedures for NRC Strategic Assessment (Closed—Ex. 2)

Thursday, January 9

10:00 a.m. Briefing by Maine Yankee, NRR, and Region I (PUBLIC MEETING) (Contact: Daniel Dorman, 301–415–1429)

12:00 am. Affirmation Session (PUBLIC MEETING) (if needed)

Week of January 13–Tentative

Monday, January 13

10:00 a.m. Briefing on NRC Strategic Assessment (PUBLIC MEETING) (Contact: John Craig, 301–415–3812)

11:30 a.m. Affirmation Session (PUBLIC MEETING) (if needed)

Week of January 20–Tentative

Tuesday, January 21

3:30 p.m. Briefing on Investigative Matters (Closed—Ex, 5 & 7)

Wednesday, January 22

10:00 a.m. Briefing on Codes and Standards (PUBLIC MEETING) (Contact: Gil Millman, 301–415–5843)

11:30 a.m. Affirmation Session (PUBLIC MEETING) (if needed)

*THE SCHEDULE FOR COMMISSION MEETINGS IS SUBJECT TO CHANGE ON SHORT NOTICE. TO VERIFY THE STATUS OF MEETINGS CALL (RECORDING)—(301) 415–1292. CONTACT PERSON FOR MORE INFORMATION: Bill Hill (301) 415–1661.

* * * * *

The NRC Commission Meeting Schedule can be found on the Internet at: http://www.nrc.gov/SECY/smj/schedule.htm

This notice is distributed by mail to several hundred subscribers; if you no longer wish to receive it, or would like to be added to it, please contact the Office of the Secretary, Attn: Operations Branch, Washington, D.C. 20555 (301–415–1661).

In addition, distribution of this meeting notice over the internet system is available. If you are interested in receiving this Commission meeting schedule electronically, please send an electronic message to wmh@nrc.gov or dkw@nrc.gov.

* * * * *

Dated: December 27, 1996.

[FR Doc. 97–00063 Filed 12–30–96; 12:45 pm]

BILLING CODE 7590–01–M

Biweekly Notice

Applications and Amendments to Facility Operating Licenses Involving No Significant Hazards Considerations

I. Background

Pursuant to Public Law 97-415, the U.S. Nuclear Regulatory Commission (the Commission or NRC staff) is publishing this regular biweekly notice. Public Law 97-415 revised section 189 of the Atomic Energy Act of 1954, as amended (the Act), to require the Commission to publish notice of any amendments issued, or proposed to be issued, under a new provision of section 189 of the Act. This provision grants the Commission the authority to issue and make immediately effective any amendment to an operating license upon a determination by the Commission that such amendment involves no significant hazards consideration, notwithstanding the pendency before the Commission of a request for a hearing from any person.

This biweekly notice includes all notices of amendments issued, or proposed to be issued from December 9, 1996, through December 19, 1996. The last biweekly notice was published on December 18, 1996.

Notice Of Consideration Of Issuance Of Amendments To Facility Operating Licenses, Proposed No Significant Hazards Consideration Determination, And Opportunity For A Hearing

The Commission has made a proposed determination that the following amendment requests involve no significant hazards consideration. Under the Commission's regulations in 10 CFR 50.92, this means that operation of the facility in accordance with the

proposed amendment would not (1) involve a significant increase in the probability or consequences of an accident previously evaluated; or (2) create the possibility of a new or different kind of accident from any accident previously evaluated; or (3) involve a significant reduction in a margin of safety. The basis for this proposed determination for each amendment request is shown below.

The Commission is seeking public comments on this proposed determination. Any comments received within 30 days after the date of publication of this notice will be considered in making any final determination.

Normally, the Commission will not issue the amendment until the expiration of the 30-day notice period. However, should circumstances change during the notice period such that failure to act in a timely way would result, for example, in derating or shutdown of the facility, the Commission may issue the license amendment before the expiration of the 30-day notice period, provided that its final determination is that the amendment involves no significant hazards consideration. The final determination will consider all public and State comments received before action is taken. Should the Commission take this action, it will publish in the Federal Register a notice of issuance and provide for opportunity for a hearing after issuance. The Commission expects that the need to take this action will occur very infrequently.

Written comments may be submitted by mail to the Chief, Rules Review and Directives Branch, Division of Freedom of Information and Publications Services, Office of Administration, U.S. Nuclear Regulatory Commission, Washington, DC 20555-0001, and should cite the publication date and page number of this Federal Register notice. Written comments may also be delivered to Room 6D22, Two White Flint North, 11545 Rockville Pike, Rockville, Maryland from 7:30 a.m. to 4:15 p.m. Federal workdays. Copies of written comments received may be examined at the NRC Public Document Room, the Gelman Building, 2120 L Street, NW., Washington, DC. The filing of requests for a hearing and petitions for leave to intervene is discussed below.

By February 3, 1997, the licensee may file a request for a hearing with respect to issuance of the amendment to the subject facility operating license and any person whose interest may be affected by this proceeding and who wishes to participate as a party in the proceeding must file a written request for a hearing and a petition for leave to intervene. Requests for a hearing and a petition for leave to intervene shall be filed in accordance with the Commission's ''Rules of Practice for Domestic Licensing Proceedings'' in 10 CFR Part 2. Interested persons should consult a current copy of 10 CFR 2.714 which is available at the Commission's Public Document Room, the Gelman Building, 2120 L Street, NW., Washington, DC and at the local public document room for the particular facility involved. If a request for a hearing or petition for leave to intervene is filed by the above date, the Commission or an Atomic Safety and Licensing Board, designated by the Commission or by the Chairman of the Atomic Safety and Licensing Board Panel, will rule on the request and/or petition; and the Secretary or the designated Atomic Safety and Licensing Board will issue a notice of a hearing or an appropriate order.

As required by 10 CFR 2.714, a petition for leave to intervene shall set forth with particularity the interest of the petitioner in the proceeding, and how that interest may be affected by the results of the proceeding. The petition should specifically explain the reasons why intervention should be permitted with particular reference to the following factors: (1) the nature of the petitioner's right under the Act to be made a party to the proceeding; (2) the nature and extent of the petitioner's property, financial, or other interest in the proceeding; and (3) the possible effect of any order which may be entered in the proceeding on the petitioner's interest. The petition should also identify the specific aspect(s) of the subject matter of the proceeding as to which petitioner wishes to intervene. Any person who has filed a petition for leave to intervene or who has been admitted as a party may amend the petition without requesting leave of the Board up to 15 days prior to the first prehearing conference scheduled in the proceeding, but such an amended petition must satisfy the specificity requirements described above.

Not later than 15 days prior to the first prehearing conference scheduled in the proceeding, a petitioner shall file a supplement to the petition to intervene which must include a list of the contentions which are sought to be litigated in the matter. Each contention must consist of a specific statement of the issue of law or fact to be raised or controverted. In addition, the petitioner shall provide a brief explanation of the bases of the contention and a concise statement of the alleged facts or expert opinion which support the contention and on which the petitioner intends to rely in proving the contention at the hearing. The petitioner must also provide references to those specific sources and documents of which the petitioner is aware and on which the petitioner intends to rely to establish those facts or expert opinion. Petitioner must provide sufficient information to show that a genuine dispute exists with the applicant on a material issue of law or fact. Contentions shall be limited to matters within the scope of the amendment under consideration. The contention must be one which, if proven, would entitle the petitioner to relief. A petitioner who fails to file such a supplement which satisfies these requirements with respect to at least one contention will not be permitted to participate as a party.

Those permitted to intervene become parties to the proceeding, subject to any limitations in the order granting leave to intervene, and have the opportunity to participate fully in the conduct of the hearing, including the opportunity to present evidence and cross-examine witnesses.

If a hearing is requested, the Commission will make a final determination on the issue of no significant hazards consideration. The final determination will serve to decide when the hearing is held.

If the final determination is that the amendment request involves no significant hazards consideration, the Commission may issue the amendment and make it immediately effective, notwithstanding the request for a hearing. Any hearing held would take place after issuance of the amendment.

If the final determination is that the amendment request involves a significant hazards consideration, any hearing held would take place before the issuance of any amendment.

A request for a hearing or a petition for leave to intervene must be filed with the Secretary of the Commission, U.S. Nuclear Regulatory Commission, Washington, DC 20555-0001, Attention: Docketing and Services Branch, or may be delivered to the Commission's Public Document Room, the Gelman Building, 2120 L Street, NW., Washington DC, by the above date. Where petitions are filed during the last 10 days of the notice period, it is requested that the petitioner promptly so inform the Commission by a toll-free telephone call to Western Union at 1-(800) 248-5100 (in Missouri 1-(800) 342-6700). The Western Union operator should be given Datagram Identification Number N1023 and the following message addressed to (Project Director): petitioner's name and

telephone number, date petition was mailed, plant name, and publication date and page number of this Federal Register notice. A copy of the petition should also be sent to the Office of the General Counsel, U.S. Nuclear Regulatory Commission, Washington, DC 20555-0001, and to the attorney for the licensee.

Nontimely filings of petitions for leave to intervene, amended petitions, supplemental petitions and/or requests for a hearing will not be entertained absent a determination by the Commission, the presiding officer or the Atomic Safety and Licensing Board that the petition and/or request should be granted based upon a balancing of factors specified in 10 CFR 2.714(a)(1)(i)-(v) and 2.714(d).

For further details with respect to this action, see the application for amendment which is available for public inspection at the Commission's Public Document Room, the Gelman Building, 2120 L Street, NW., Washington, DC, and at the local public document room for the particular facility involved.

Arizona Public Service Company, et al., Docket Nos. STN 50-528, STN 50-529, and STN 50-530, Palo Verde Nuclear Generating Station, Units 1, 2, and 3, Maricopa County, Arizona

Date of amendments request: November 6, 1996

Description of amendments request: The proposed amendment would modify the technical specifications (TS) to require manual blocking of one train of fast bus transfer (FBT) within the first hour of degraded switchyard voltage should the switchyard voltage fall below the level necessary for the electrical distribution system (EDS) degraded voltage protection to maintain compliance with General Design Criteria (GDC) 17. The proposed amendment would further require the starting, paralleling with the grid, loading, and then separating from the grid the other train's emergency diesel generator (EDG) within the first hour, rather than the current TS which allows two hours after onset of a degraded switchyard voltage condition to start the EDG. Alternatively, fast bus transfer can be blocked in both trains within the first hour. The proposed amendment includes changes to the applicable notes to reflect that these changes are no longer temporary, but will remain as part of the long-term solution to this issue.

Basis for proposed no significant hazards consideration determination: As required by 10 CFR 50.91(a), the licensee provided its analysis of the issue of no significant hazards consideration. The NRC staff's analysis is presented below:

1. The proposed change does not involve a significant increase in the probability or consequences of an accident previously evaluated.

The proposed change reduces the amount of time the second train of electrical equipment is allowed to remain in nonconformance with GDC 17 in the TS action statement. This change only affects equipment used to mitigate an event, and does not affect equipment assumed to initiate any event. Thus the probability of an accident previously evaluated is not affected.

The proposed change brings the second EDS train into compliance with GDC 17 at least one hour sooner than the current TS. Once in conformance with GDC 17, the consequences of accidents previously evaluated conform to the current analysis. Thus the proposed change does not increase the consequences of an accident previously evaluated.

2. The proposed change does not create the possibility of a new or different kind of accident from any accident previously evaluated.

The proposed change only affects equipment designed to mitigate the effects of an accident. The proposed change ensures that safety equipment is configured as assumed in the current accident analysis. The proposed change does not affect the conditions of structures, systems, or components assumed in the safety analysis beyond the existing design basis as maintained by the current TS. The proposed change does not, therefore, create the possibility of a new or different kind of accident from any accident previously evaluated.

3. The proposed change does not involve a significant reduction in a margin of safety.

The margin of safety affected by the proposed change is based on calculated offsite dose consequences for postulated transients and accidents for which the EDS provides power for equipment required to mitigate. The proposed change reduces the time that one train of the EDS is allowed to remain in nonconformance with GDC 17, thus increasing the availability of the EDS prior to the onset of a postulated accident compared to the current TS. Thus the proposed change does not increase thecalculated offsite dose, and therefore the proposed change does not involve a significant reduction in a margin of safety.

Based on this review, it appears that the three standards of 10 CFR 50.92(c) are satisfied. Therefore, the NRC staff proposes to determine that the amendments request involve no significant hazards consideration.

Local Public Document Room location: Phoenix Public Library, 1221 N. Central Avenue, Phoenix, Arizona 85004

Attorney for licensee: Nancy C. Loftin, Esq., Corporate Secretary and Counsel, Arizona Public Service Company, P.O. Box 53999, Mail Station 9068, Phoenix, Arizona 85072-3999

NRC Project Director: William H. Bateman

Baltimore Gas and Electric Company, Docket Nos. 50-317 and 50-318, Calvert Cliffs Nuclear Power Plant, Unit Nos. 1 and 2, Calvert County, Maryland

Date of amendments request: November 26, 1996

Description of amendments request: The proposed amendment will adopt Option B of 10 CFR Part 50, Appendix J, to require Type B and Type C containment leakage rate testing to be performed on a performance-based testing schedule. Containment leakage rate testing is currently performed in accordance with 10 CFR Part 50, Appendix J, Option A, ''Primary Reactor Containment Leakage Testing for Water-Cooled Power Reactors.'' Appendix J specifies containment leakage testing requirements, including the types of tests required, frequency of testing, and reporting requirements. Containment leakage test requirements include performance of Integrated Leakage Rate Tests, also known as Type A tests, which measure overall leakage rate of the containment; and Local Leakage Rate Tests, also known as Types B and C tests, which measure the leakage through containment penetrations and valves. The Nuclear Regulatory Commission (NRC) has amended the regulations to provide an alternate performance-based option, Option B, to the existing Appendix J. Baltimore Gas and Electric Company (BGE) received approval to adopt Option B for Type A testing only. At this time, BGE plans to adopt Option B for Types B and C testing, as well.

BGE is revising the Containment Leakage Rate Testing Program for Type A testing to implement Types B and C testing of the containment as required by 10 CFR 50.54(o) and 10 CFR Part 50, Appendix J, Option B. The revised program will be developed in accordance with the guidelines contained in Regulatory Guide 1.163 ''Performance-Based Containment Leak-Rate Test Program,'' dated September 1995, including errata.

Basis for proposed no significant hazards consideration determination: As required by 10 CFR 50.91(a), the licensee has provided its analysis of the issue of no significant hazards consideration, which is presented below:

1. Would not involve a significant increase in the probability or consequences of an accident previously evaluated.

Containment leakage rate testing is performed in accordance with 10 CFR Part 50, Appendix J, ''Primary Reactor Containment Leakage Testing for Water-Cooled Power Reactors.'' The Appendix J containment leakage test requirements include performance of Type A tests, which measure the overall leakage rate of the containment, and Types B and C tests, which measure the leakage through containment penetrations and valves. The Nuclear Regulatory Commission has amended the regulations to provide a performance-based alternative, Option B, to the existing Appendix J. Baltimore Gas and Electric Company adopted Option B for Type A testing during the Unit 1 refueling outage earlier this year. At this time, BGE plans to adopt Option B for Types B and C testing.

Implementation of Option B involves no physical or operational changes to the plant structures, systems, or components. Furthermore, leakage rate does not contribute to the initiation of any postulated accidents; therefore, this proposed change does not involve an increase in the probability of any previously evaluated accidents.

Types B and C testing is necessary to demonstrate that leakage through the containment penetrations is within the limits assumed in the accident analyses. The only potential effect of the proposed change to the Types B and C test frequency is the possibility that containment penetration leakage would go undetected between tests. To provide assurance that containment penetration leakage remains within the limits of the Technical Specifications, BGE plans to implement the performance-based leakage testing program in accordance with NRC Regulatory Guide 1.163, dated September 1995 (including errata), with no exceptions.

By adopting Option B, BGE will no longer require an exemption from 10 CFR Part 50, Appendix J, which was granted to accommodate 24-month operating cycles. The exemption increased the surveillance interval to a maximum of 30 months, while proportionately decreasing the combined Types B and C leakage rate acceptance criteria. Option B to Appendix J provides the regulation necessary to accommodate an extended fuel cycle, while maintaining the original combined Types B and C leakage rate testing limit. Therefore, BGE has requested revocation of the exemption to 10 CFR Part 50, Appendix J, as adoption of Option B for Types B and C testing will enable a return to full compliance with Appendix J. As the facility will be in full compliance with the regulations, this change does not increase the consequences of any previously evaluated accidents.

Implementation of Option B does not change the total allowable containment leakage rate acceptance criteria, nor does it change the total leakage assumed in the accident analyses. Option B allows the implementation of a performance-based testing program to ensure that resources are concentrated on the components most likely to exceed administrative limits. Similarly, the changes to relocate the procedural details, including test frequency, performance and data conversion methodology, for containment leakage rate testing from the Technical Specifications to the Containment Leakage Rate Testing Program will have no effect on the total containment leakage allowed by the Technical Specifications, or assumed in the accident analyses. Relocating the allowable leakage rate conversions (Standard Cubic Centimeters per Minute) to the Technical Specification Bases does not change the allowable leakage rates (as a percentage of the containment air volume) specified in the Technical Specifications. Furthermore, relocation of the programmatic controls for Types B and C testing, including the allowable leakage rates, to the Administrative Controls section of the Technical Specifications ensures an adequate level of regulatory control of these criteria is retained.

Additionally, the Calvert Cliffs Individual Plant Examination considered the effects associated with severe accidents which could lead to containment failure. It was concluded that adopting a performance-based testing interval will not significantly affect the containment failure probabilities calculated for the Individual Plant Examination. Altogether, adoption of a performance-based testing frequency, as specified in 10 CFR Part 50, Appendix J, Option B, will not significantly decrease the confidence in the leak-tightness of the containment, including containment penetrations. Therefore, this change will not result in a significant increase in the probability of undetected containment penetration leakage in excess of that allowed by the Containment Leakage Rate Testing Program, or assumed in the accident analysis, or in the consequences of an accident previously evaluated.

Therefore, the proposed change does not involve a significant increase in the probability or consequences of an accident previously evaluated.

2. Would not create the possibility of a new or different type of accident from any accident previously evaluated.

The proposed Technical Specification change adopts a performance-based approach to containment penetration leakage rate testing. This change does not add any new equipment, modify any interfaces with any existing equipment, or change the equipment's function, or the method of operating the equipment. The proposed change does not affect normal plant operations or configuration, nor does it affect leakage rate test methods. As the proposed change would not change the design, configuration or operation of the plant, it could not cause containment penetration leakage rate testing to become an accident initiator.

Therefore, the proposed change does not create the possibility of a new or different type of accident from any accident previously evaluated.

3. Would not involve a significant reduction in a margin of safety.

The purpose of the existing schedule for Types B and C tests is to provide assurance, on a regular basis, that the release of radioactive material will be restricted to those leak paths and leakage rates assumed in the accident analyses. The margin of safety associated with containment penetration leakage rates is not reduced if containment leakage does not exceed the maximum allowable leakage rate defined in the Technical Specifications. Implementation of Option B does not change the total allowable containment leakage rate acceptance criteria, nor does it change the total leakage assumed in the accident analyses. Option B only allows the implementation of a performance-based testing program to ensure that resources are concentrated on the components most likely to exceed administrative limits. Similarly, the changes to relocate the procedural details for containment leakage rate testing from the Technical Specifications to either the Containment Leakage Rate Testing Program or the Technical Specification Bases will have no effect on the total containment leakage allowed by the Technical Specifications, or assumed in the accident analyses. Furthermore, relocation of the programmatic controls for Types B and C testing, including the allowable leakage rates, to the Administrative Controls section of the Technical Specifications ensures that the same regulatory control of these criteria is retained.

Elimination of the exemption to Appendix J which reduced the amount of combined Types B and C testing allowable leakage redistributes that portion of the total containment leakage which may be attributed to local leakage rate testing, but does not affect the maximum allowable containment leakage rate, L_a. The proposed change does not affect a safety limit, a Limiting Condition for Operation, or the way in which the plant is operated.

The NRC staff has reviewed the licensee's analysis and, based on this review, it appears that the three standards of 50.92(c) are satisfied. Therefore, the NRC staff proposes to determine that the amendments request involves no significant hazards consideration.

Local Public Document Room location: Calvert County Library, Prince Frederick, Maryland 20678.

Attorney for licensee: Jay E. Silbert, Esquire, Shaw, Pittman, Potts and Trowbridge, 2300 N Street, NW., Washington, DC 20037.

NRC Project Director: S. Singh Bajwa, Acting Director

Detroit Edison Company, Docket No. 50-341, Fermi-2, Monroe County, Michigan

Date of amendment request: December 2, 1996 (NRC-96-0134)

Description of amendment request: The proposed amendment would revise Technical Specification (TS) 3.1.4.3, Rod Block Monitor, and Tables 3.3.6-1 and 4.3.6-1 in TS 3.3.6, Control Rod Block Instrumentation, to expand the range of conditions under which the rod block monitor must be operable. These changes are required to ensure that all fuel limits are met for the core that has been loaded for Cycle 6.

Basis for proposed no significant hazards consideration determination: As required by 10 CFR 50.91(a), the licensee has provided its analysis of the issue of no significant hazards consideration, which is presented below:

1. The proposed changes provide requirements that are more restrictive than the existing requirements for operation of the facility. These changes provide assurance that the Rod Block Monitor system is operable when necessary to prevent or mitigate transients that could potentially threaten the integrity of the fuel cladding. There will be no adverse impact on the probability of any accident previously evaluated since the change provides additional assurance that fuel thermal and mechanical design bases will be satisfied and has no effect on any accident initiating mechanism. The additional restrictive conditions on plant operation also ensure that the consequences of anticipated operational occurrences are no more severe than the most limiting conditions using the current Technical Specifications. Therefore these changes do not involve any increase in the probability or consequences of an accident previously evaluated.

2. The proposed changes will not involve any physical changes to plant systems, structures, or components (SSC). The changes in Rod Block Monitor operability requirements are consistent with the current safety analysis assumptions. These requirements provide assurance that the Rod Block Monitor will be operable if necessary to terminate a rod withdrawal error so that fuel thermal and mechanical design limits are satisfied. The change does not cause a physical change to the plant or introduce a new mode of operation. Therefore, the proposed amendment will not create the possibility of a new or different kind of accident from any accident previously evaluated.

3. These changes maintain current assumptions within the safety analyses and design basis. The changes provide assurance that the Rod Block Monitor will be operable if necessary to terminate a rod withdrawal error so that fuel thermal and mechanical design limits are satisfied. Therefore, these changes do not involve a reduction in a margin of safety.

The NRC staff has reviewed the licensee's analysis and, based on this review, it appears that the three standards of 10 CFR 50.92(c) are satisfied. Therefore, the NRC staff proposes to determine that the amendment request involves no significant hazards consideration.

Local Public Document Room location: Monroe County Library System, 3700 South Custer Road, Monroe, Michigan 48161

Attorney for licensee: John Flynn, Esq., Detroit Edison Company, 2000 Second Avenue, Detroit, Michigan 48226

NRC Project Director: John N. Hannon

Entergy Gulf States, Inc., Cajun Electric Power Cooperative, and Entergy Operations, Inc., Docket No. 50-458, River Bend Station, Unit 1, West Feliciana Parish, Louisiana

Date of amendment request: November 6, 1996

Description of amendment request: The proposed amendment would revise the technical specifications to permit an increase in the allowable leak rate for the Main Steam Isolation Valves (MSIVs) and delete the Penetration Valve Leakage Control System (PVLCS) and Main Steam-Positive Leakage Control System (MS-PLCS) requirements.

Basis for proposed no significant hazards consideration determination: As required by 10 CFR 50.91(a), the licensee has provided its analysis of the issue of no significant hazards consideration, which is presented below:

(1) The operation of River Bend Station, in accordance with the proposed amendment, will not involve a significant increase in the probability or consequences of any accident previously evaluated.

The proposed amendment to delete Technical Specification 3.6.1.8 and 3.6.1.9 involves eliminating the PVLCS and MS-PLCS leakage control requirements from the Technical Specifications. As described in Sections 9.3 and 6.7 respectively, of the USAR [Updated Safety Analysis Report], the PVLCS and MS-PLCS are manually initialed about 20 minutes following a design basis LOCA [Loss of Coolant Accident].

Since the PVLCS and MS-PLCS are operated only after an accident has occurred, this proposed amendment has no effect on the probability of an accident.

Since MSIV leakage and operation of the PVLCS and MS-PLCS are included in the radiological analysis for the design basis LOCA as described in Section 15.6.5 of the USAR, the proposed amendments will not affect the precursors of other analyzed accidents. The PVLCS and MS-PLCS are not initiators of any previously analyzed accident. The proposed amendments result in acceptable radiological consequences of the design basis LOCA previously evaluated in Section 15.6.5 of the USAR.

The proposed amendment to Technical Specification 3.6.1.3 does not involve a change to structures, components or systems that would affect the probability of an accident previously evaluated. A plant-specific radiological analysis has been performed to assess the affects of the proposed increase to the allowable MSIV leak rate and deletion of the PVLCS and MS-PLCS in terms of Control Room and off-site doses following a postulated design basis LOCA. This change required a revision to the existing LOCA dose analysis due to the potential leakage from the MSIVs and those valves served by the PVLCS. Additional changes were also included in the revised dose analysis to account for changes in regulatory guidance and dose methodology. Leakage from the drywell to the atmosphere through the PVLCS (secondary containment bypass valves) are both assumed to begin at time zero. The model conservatively assumes that one inboard MSIV fails open at time zero and the MSIVs associated with the remaining three main steam lines are assumed to begin leakage at 2 hours with a total leak rate of 200 scfh for all four main steam lines. The design basis leak rate of the primary containment (excluding main steam lines and lines sealed by the PVLCS) is 0.26% of the containment volume by weight per 24 hours for the duration of the accident and is assumed to be released entirely to the environment initially or the secondary containment later into the accident. The leakage of 170,000 cc/hr (4298 sccm) at P_a through the containment isolation valves served by the PVLCS is considered as bypass leakage circumventing the secondary containment. The on-site and off-site doses were determined using the TRANSACT computer code which included the ICRP 30 dose conversion factors. The total off-site and on-site LOCA doses for both the airborne and liquid release pathways resulting from the proposed change are bounded by the applicable regulatory limits.

The analysis demonstrates that dose contributions from the proposed combined MSIV leakage rate limit of 200 scfh and from the proposed deletion of the PVLCS and MS-PLCS result in values bounded by the applicable regulatory limits as compared to the LOCA doses previously evaluated for the off-site and Control Room doses as contained in 10CFR100 and 10CFR50, Appendix A (General Design Criteria 19), respectively. The LOCA doses previously evaluated are discussed in Section 15.6.5 of the USAR.

The whole body (DDE [Deep Dose Equivalent]) doses at the Low Population Zone (LPZ) is 2.82 Rem and the Control Room is 0.43 Rem. These values are acceptable since the revised doses are bounded by the Regulatory Guidelines (2.82 versus 25 Rem at the LPZ and 0.43 versus 5 Rem at the Control Room). The associated whole boy (DDE) dose at the exclusion area boundary (EAB) is 4.69 Rem which also remains bounded by the Regulatory Guideline of 25 Rem.

The thyroid CEDE [Committed Effective Dose Equivalent] dose at the LPZ is 62.58 Rem. This is acceptable since the revised dose of 62.58 Rem is significantly less than the Regulatory Guideline (300 Rem). The EAB thyroid CEDE dose is 37.53 Rem, whereas the Control Room thyroid CEDE dose is 11.18 Rem. These values are also acceptable since the revised doses are well within the Regulatory Guidelines (37.53 versus 300 Rem at the EAB and 11.18 versus 30 Rem at the Control Room). The Control Room beta (SDE [Shallow Dose Equivalent]) dose is 9.15 Rem which also remains bounded by the Regulatory Guideline of 30 Rem.

In summary, the proposed changes do not result in an increase to the radiological consequences of a LOCA previously evaluated in the USAR. The revised LOCA doses are bounded by the Regulatory Guidelines. The effectiveness of the proposed request even for leakage rates greater than the

proposed MSIV allowable leak rate ensures that off-site and Control Room dose limits are not exceeded.

There is no physical change to the ADS/SRVs [Automatic Depressurization System/Safety Relief Valve]. The PVLCS accumulator tanks remain the backup air supply to the ADS/SRV accumulators. A qualified long-term backup air supply remains but is supplied from a difference source. Therefore, the proposed change does not involve a significant increase in the probability or consequences of an accident previously evaluated.

The proposed change deletes the requirements for the LCS [Leakage Control System] isolation valves which are non-PCIVs. These valves are eliminated and will not be performing a safety function. The LCS lines that are connected to the PCIVs and process piping will be welded and/or capped closed to assure primary containment integrity is maintained. The welding and post-weld examination procedures will be in accordance with the American Society of Mechanical Engineers (ASME) Code, Section XI requirements. These welds and/or caps will be periodically tested as part of the primary Containment Integrated Leak Rate Test (CILRT) program in accordance with the requirements of 10CFR50, Appendix J. The proposed change does not involve an increase in the probability of equipment malfunction previously evaluated in the USAR. In fact, the proposed change reduces the probability of equipment malfunction since, upon implementation, RBS will be operated with fewer process line isolation valves and associated support equipment subjected to postulated failure. The affected LCS MOVs [Motor Operated Valves] will be eliminated or retained as normal system isolation or maintenance valves having no safety or leakage control function thus requiring no bypassing of their thermal overloads. This proposed change has no effect on the consequences of an accident previously evaluated since the LCS lines will be welded and/or capped closed, thus assuring that primary containment integrity, isolation and leak test capability are not compromised.

Therefore, as discussed above, the proposed changes do not involve a significant increase in the probability or consequences of any accident previously evaluated.

(2) The operation of River Bend Station, in accordance with the proposed amendment, will not create the possibility of a new or different kind of accident from any accident previously evaluated.

The proposed amendment to Technical Specification 3.6.1.3 does not create the possibility for a new or different kind of accident from any accident previously evaluated. The BWROG (Boiling Water Reactors Owners Group) evaluated MSIV leakage performance and concluded that MSIV leakage rates up to 200 scfh will not inhibit the capability and isolation performance of the valve to isolate the primary containment. There is no new modification which could impact the MSIV operability. The LOCA has been reanalyzed at the proposed maximum combined leakage rate of 200 scfh. Therefore, the proposed change does not create any new or different kind of accident from any accident previously evaluated in the USAR.

The proposed amendment to delete Technical Specification 3.6.1.8 and 3.6.1.9 does not create the possibility of a new or different kind of accident from any accident previously evaluated because the removal of the PVLCS and MS-PLCS does not affect any of the remaining systems at RBS [River Bend Station) and the LOCA has been reanalyzed with LOCA doses resulting from the proposed change remaining bounded by the applicable regulatory limits.

The PVLCS and MS-PLCS are of low safety significance as discussed in NUREG-1273, Technical Findings and Regulatory Analysis for Generic Safety Issue II.E.4.3, ''Containment Integrity Check,'' and NUREG/CR-3539, ''Impact of Containment Building Leakage on LWR Accident Risk.''

The proposed change to eliminate the LCS does not create the possibility of a new or different kind of accident from any accident previously evaluated because the removal of the LCS does not adversely affect any of the remaining RBS systems or change system inter-relationships. The associated proposed changes to delete the LCS isolation valves does not create the possibility of a new or different kind of accident. The affected LCS MOVs will be eliminated or retained as normal system isolation or maintenance valves having no safety or leakage control function thus requiring no bypassing of their thermal overloads. The PVLCS and MS-PLCS connections to the process piping will be welded and/or capped closed to assure that primary containment integrity, isolation and leak testing capability are not compromised, therefore eliminating the possibility for any new or different kind of accident.

Therefore, as discussed above, the proposed changes do not create the possibility of a new or different kind of accident from any accident previously evaluated.

(3) The operation of River Bend Station, in accordance with the proposed amendment, will not involve a significant reduction in a margin of safety.

The proposed amendment to Technical Specification 3.6.1.3 does not involve a significant reduction in a margin of safety. The allowable leak rate limit specified for the MSIVs is used to quantify a maximum amount of bypass leakage assumed in the LOCA radiological analysis. Results of the analysis demonstrate calculated doses, assuming the two single active failures of one MSIV to close and one diesel generator to respond are bounded by the requirements of 10CFR100 for the off-site doses and 10CFR50, Appendix A (General Design Criteria 19) for the Control Room doses. The calculated whole body doses are significantly reduced at the LPZ, the Control Room, and the EAB. The calculated thyroid dose is significantly reduced at the LPZ, the Control Room, and the EAB.

The proposed amendment to delete Technical Specification 3.6.1.8 and 3.6.1.9 for the PVLCS and MS-PLCS, does not reduce the margin of safety. In fact, the overall margin of safety is increased. The method is effective to reduce dose consequences of MSIV and the PVLCS leakage over an expanded operating range and will, thereby, resolve the safety concern that the PVLCS and MS-PLCS will not function at leakage rates higher than their design capacity. The method is consistent with the philosophy of protection by multiple leak-tight barriers used in containment design for limiting fission product release to the environment. Therefore, the proposed method is highly reliable and effective for MSIV leakage and deletion of the PVLCS and MS-PLCS.

The calculation shows that MSIV leakage rates up to 100 scfh per steam line would not exceed the regulatory limits. Therefore, the proposed method provides a substantial safety margin for mitigating the radiological consequences of MSIV leakage beyond the proposed Technical Specification leak rate limit of 200 scfh for all four main steam lines (combined maximum pathway).

Minor increases in containment leakage such as the leakage through the MSIVs, as identified in NUREG-1273, NUREG/CR-3539, and NUREG-1493 have been found to have no significant impact on the risk to the public. Therefore, the proposed change does not result in a significant reduction in a margin of safety.

The proposed change to delete the LCS isolation valves does not reduce the margin of safety. Welded and/or capped closure of the LCS lines assure that primary containment integrity and leak testing capability are not compromised. The affected LCS MOVs will be eliminated or retained as normal system isolation or maintenance valves having no safety or leakage control function thus requiring no bypassing of their thermal overloads. The PVLCS and MS-PLCS connections to the process piping will be welded and/or capped closed to assure that primary containment integrity, isolation and leak testing capability are not compromised, therefore eliminating the possibility for a significant reduction in the margin of safety.

Therefore, as discussed above, the proposed changes do not involve a significant reduction in a margin of safety.

The NRC staff has reviewed the licensee's analysis and, based on this review, it appears that the three standards of 10 CFR 50.92(c) are satisfied. Therefore, the NRC staff proposes to determine that the amendment request involves no significant hazards consideration.

Local Public Document Room location: Government Documents Department, Louisiana State University, Baton Rouge, LA 70803

Attorney for licensee: Mark Wetterhahn, Esq., Winston & Strawn, 1400 L Street, N.W., Washington, D.C. 20005

NRC Project Director: William D. Beckner

Entergy Gulf States, Inc., Cajun Electric Power Cooperative, and Entergy Operations, Inc., Docket No. 50-458, River Bend Station, Unit 1, West Feliciana Parish, Louisiana

Date of amendment request: November 15, 1996

Description of amendment request: The proposed amendment would revise the technical specifications to allow the performance of the 24-hour emergency diesel generator (EDG) maintenance run while the unit is in either Mode 1 or Mode 2. This test for the River Bend Station (RBS) is currently prohibited in Mode 1 and Mode 2 and allowed in Modes 3, 4, and 5.

Basis for proposed no significant hazards consideration determination: As required by 10 CFR 50.91(a), the licensee has provided its analysis of the issue of no significant hazards consideration, which is presented below:

1. The proposed change does not significantly increase the probability or consequences of an accident previously evaluated.

The RBS SAR [Safety Analysis Report] assumes that the AC [Alternating Current] electrical power sources are designed to provide sufficient capacity, capability, redundancy and reliability to ensure that the fuel, reactor coolant system and containment design limits are not exceeded during an assumed design basis event. Specifically, the SAR assumes that the onsite EDGs provide emergency power in the event offsite power is lost to either one or all three EDF [Engineered Safety Features]

buses. In the event of a loss of preferred power, the ESF electrical loads are automatically connected to the EDGs in sufficient time to provide for safe reactor shutdown and to mitigate the consequences of a design basis accident such as a LOCA [Loss of Coolant Accident].

The proposed change to permit the 24-hour testing of the EDGs during power operation does not significantly increase the probability or consequences of any previously evaluated accident. The capability of the EDGs to supply power in a timely manner will not be compromised by permitting performance of EDG testing during periods of power operation. Design features of the EDGs and electrical systems ensure that if a LOCA or LOP [Loss of Offsite Power] signal, either individually or concurrently, should occur during testing, the EDG would be returned to its ready-to-load condition (i.e., EDG running at rated speed and voltage separated from the offsite sources) or separately connected to the ESF bus providing ESF loads. An EDG being tested is considered to be operable and fully capable of meeting its intended design function. Additionally, the testing of an EDG is not a precursor to any preciously evaluated accidents.

If, during the test period, the EDG were to receive a normal operation protective trip resulting in the actuation of a generator lockout signal, the lockout could be reset by the operators monitoring the test. The resulting delay does not present an immediate challenge to the fuel cladding integrity, reactor water level control or to containment parameters, as demonstrated by the bounding four-hour station blackout coping analysis contained in RBS's station blackout conformance report.

Therefore, the proposed change allowing testing of EDGs during power operation will not significantly increase the probability or consequences of an accident previously evaluated.

2. The proposed change does not create the possibility of a new or different kind of accident from any accident previously evaluated.

As previously discussed, the proposed change to permit the performance of EDG testing during power operation will not affect the operation of any system or alter any system's response to previously evaluated design basis events. The EDGs will automatically transfer from the test configuration to the ready-to-load configuration following receipt of a valid signal (i.e., LOCA or LOP). In the ready-to-load configuration the EDG will be running at rated speed and voltage, separated from the offsite source and capable of automatically supplying power to the ESF buses in the event that preferred power is actually lost.

The proposed change is also the same configuration currently used for the monthly one-hour test. Therefore, testing during power operation will not create the possibility of a new or different kind of event from any previously evaluated.

[Surveillance Requirement] SR 3.8.1.16 demonstrated that the EDG will automatically override the test mode following generation of a LOCA signal. In addition, the ability of the EDGs to survive a full load reject is verified by the performance of SR 3.8.1.9. These existing surveillance requirements, along with system design features, ensure that the performance of EDG testing during power operation will not create the possibility of a new or different kind of accident from any previously evaluated.

3. The proposed change does not involve a significant reduction in a margin of safety.

The AC electrical power sources are designed to provide sufficient capacity, capability, redundancy, and reliability to ensure the availability of necessary power to ESF systems so that the fuel, reactor coolant system and containment design limits are not exceeded. Specifically, the EDGs must be capable of automatically providing power to ESF loads in sufficient time to provide for safe reactor shutdown and to mitigate the consequences of a design basis accident in the event of a loss of preferred power.

Testing of EDGs during power operation will not affect the availability or operation of any offsite source of power. In addition, the EDG being tested remains capable of meeting it intended design functions. Therefore, the proposed change to the Technical Specification Surveillance Requirement 3.8.1.13 will not result in a reduction in a margin of safety.

The NRC staff has reviewed the licensee's analysis and, based on this review, it appears that the three standards of 10 CFR 50.92(c) are satisfied. Therefore, the NRC staff proposes to determine that the amendment request involves no significant hazards consideration.

Local Public Document Room location: Government Documents Department, Louisiana State University, Baton Rouge, LA 70803

Attorney for licensee: Mark Wetterhahn, Esq., Winston & Strawn, 1400 L Street, N.W., Washington, D.C. 20005

NRC Project Director: William D. Beckner

Entergy Gulf States, Inc., Cajun Electric Power Cooperative, and Entergy Operations, Inc., Docket No. 50-458, River Bend Station, Unit 1, West Feliciana Parish, Louisiana

Date of amendment request: November 15, 1996

Description of amendment request: The proposed amendment would increase the two recirculation loop Minimum Critical Power Ratio (MCPR) limit from 1.07 to 1.10 and the single recirculation loop MCPR limit from 1.08 to 1.12. This change request is the result of a non-conservative calculation identified by the fuel vendor.

Basis for proposed no significant hazards consideration determination: As required by 10 CFR 50.91(a), the licensee has provided its analysis of the issue of no significant hazards consideration, which is presented below:

The request does not involve a significant increase in the probability or consequences of an accident previously evaluated.

The revised Safety Limit MCPR and the cycle-specific thermal limits that are based on the revised SLMCPR have been calculated using the methods identified in the ''Supplemental Reload Licensing Report For River Bend Station Reload 6 Cycle 7'' (Reference 1). These methods are within the existing design and licensing basis and cannot increase the probability or severity of an accident. The basis of the MCPR Safety Limit calculation is to ensure that greater that [than] 99.9% of all fuel rods in the core avoid transition boiling and fuel damage in the event of a postulated accident.

The SLMCPR is used to establish the Operating Limit Minimum Critical Power Ratio (OLMCPR). Neither the SLMCPR nor the OLMCPR can initiate an event, therefore[,] a change to the SLMCPR does not increase the probability of a accident previously evaluated. Maintaining the Minimum Critical Power Ratio (MCPR) at or above the OLMCPR during normal operations precludes fuel failure due to overheating of the fuel clad during an anticipated operational occurrence (AOO), thus limiting the consequences of an AOO. The proposed change will increase the SLMCPR, which will require the OLMCPR to be increased,

which in turn will ensure that the requirements of 10 CFR [Part] 100 are met for an AOO. Therefore, there is no increase in the consequences of an accident previously analyzed.

The request does not create the possibility of occurrence of a new or different kind of accident from any accident previously evaluated.

The MCPR Safety Limit is a Technical Specification numerical value designed to ensure that fuel damage from transition boiling does not occur as a result of the limiting postulated accident. It cannot create the possibility of any new type of accident.

Neither the SLMCPR or the OLMCPR can initiate an event, therefore, a change to the SLMCPR does not create the possibility of occurrence of a new or different kind of accident from any accident previously evaluated.

The request does not involve a significant reduction in the margin of safety.

The MCPR Safety Limit is a Technical Specification numerical value designed to ensure that fuel damage from transition boiling does not occur as a result of the limiting postulated accident. This new Safety Limit MCPR is calculated using the methods identified in the reference. These methods are within the existing design and licensing basis and based on RBS specific inputs.

The margin of Safety resides between the SLMCPR and the point at which fuel fails. The proposed change to SLMCPR (and the OLMCPR) will in fact restore the margin of safety associated with GE's SLMCPR methodology.

The NRC staff has reviewed the licensee's analysis and, based on this review, it appears that the three standards of 10 CFR 50.92(c) are satisfied. Therefore, the NRC staff proposes to determine that the amendment request involves no significant hazards consideration.

Local Public Document Room location: Government Documents Department, Louisiana State University, Baton Rouge, LA 70803

Attorney for licensee: Mark Wetterhahn, Esq., Winston & Strawn, 1400 L Street, N.W., Washington, D.C. 20005

NRC Project Director: William D. Beckner

Entergy Operations Inc., Docket No. 50-382, Waterford Steam ElectricStation, Unit 3, St. Charles Parish, Louisiana

Date of amendment request: December 2, 1996

Description of amendment request: The proposed Technical Specification (TS) Change Request will permit the use of 10CFR50 Appendix J, Option B, Performance-Based Containment Leakage Testing for Type A, B and C leak rate testing. TSs 3/4.6.1.1, 3/4.6.1.2, 3/4.6.1.3, 4.6.1.6 and 4.6.1.7 are revised and Section 6.15 is added establishing the Containment Leakage Rate Testing Program. The Bases are revised to reflect this change. Minor editorial changes are included in this request. Waterford Steam Electric Station is planning to have a Containment Leakage Rate Testing Program in place prior to the next scheduled refueling outage. This program will be in accordance with the guidelines contained in Regulatory Guide 1.163, ''Performance-Based Containment Leak-Test Program,'' dated September 1995.

Basis for proposed no significant hazards consideration determination: As required by 10 CFR 50.91(a), the licensee has provided its analysis of the issue of no significant hazards consideration, which is presented below:

The proposed change will not affect the assumptions, design parameters, or results of any accident previously evaluated. The proposed change does not add or modify any existing equipment. The proposed changes will result in increased intervals between containment leakage tests determined through a performance based approach. The intervals between such tests are not related to conditions which cause accidents. The proposed changes do not involve a change to the plant design or operation. Therefore, this change does not involve a significant increase in the probability of any accident previously evaluated.

NUREG-1493, ''Performance-Based Containment Leak-Test Program,'' contributed to the technical bases for Option B of 10 CFR 50 Appendix J. NUREG-1493 contains a detailed evaluation of the expected leakage from containment and the associated consequences. The increased risk due to lengthening of the intervals between containment leakage tests was also evaluated and found acceptable. Using a statistical approach, NUREG-1493 determined the increase in the expected dose to the public from extending the testing frequency is extremely small. It also concluded that a small increase is justifiable due to the benefits which accrue from the interval extension. The primary benefit is in the reduction in occupational exposure. The reduction in the occupational exposure is a real reduction, while the small increase to the public is statistically derived using conservative assumptions. Therefore, this change does not involve a significant increase in the consequences of any accident previously evaluated.

The proposed change does not involve modifications to any existing equipment. The proposed change will not affect the operation of the plant or the manner in which the plant is operated. The reduced testing frequency will not affect the testing methodology. Therefore, the proposed change will not create the possibility of a new or different kind of accident from any accident previously evaluated.

The proposed change does not change the performance methodology of the containment leakage rate testing program. However, the proposed change does affect the frequency of containment leakage rate testing. With an increased frequency between tests, the proposed change does increase the probability that a increase in leakage could go undetected for a longer period of time. Operational experience has demonstrated the leak tightness of the containment buildings has been significantly below the allowable leakage limit.

The margin of safety that has the potential of being impacted by the proposed change involves the offsite dose consequences of postulated accidents which are directly related to containment leakage rates. The limitation on containment leakage rate is designed to ensure the total leakage volume will not exceed the value assumed in our accident analysis. The margin of safety for the offsite dose consequences of postulated accidents directly related to containment leakage is maintained by meeting the 1.0 La acceptance criteria. The proposed change maintains the 1.0 La acceptance criteria. Therefore, the proposed change will not involve a significant reduction in a margin of safety.

The NRC staff has reviewed the licensee's analysis and, based on this review, it appears that the three standards of 10 CFR 50.92(c) are satisfied. Therefore, the NRC staff proposes to determine that the amendment request involves no significant hazards consideration.

Local Public Document Room location: University of New Orleans Library, Louisiana Collection, Lakefront, New Orleans, LA 70122

Attorney for licensee: N.S. Reynolds, Esq., Winston & Strawn 1400 L Street N.W., Washington, D.C. 20005-3502

NRC Project Director: William D. Beckner

Georgia Power Company, Oglethorpe Power Corporation, Municipal Electric Authority of Georgia, City of Dalton, Georgia, Docket Nos. 50-321 and 50-366, Edwin I. Hatch Nuclear Plant, Units 1 and 2, Appling County, Georgia

Date of amendment request: September 19, 1996

Description of amendment request: The proposed changes to Plant Hatch Units 1 and 2 Technical Specifications would revise the Surveillance Requirements (SRs) addressing the reactor vessel pressure and temperature (P/T) limits. The affected SRs are 3.4.9.1, 3.4.9.2, 3.4.9.3, 3.4.9.4, 3.4.9.5, 3.4.9.6, and 3.4.9.7, and the corresponding Units 1 and 2 Figures 3.4.9-1, 3.4.9-2, and 3.4.9-3, which show P/T limit curves for inservice leak and hydrostatic testing, non-nuclear heatup and cooldown, and criticality, respectively.

The P/T curves would be changed to allow separate monitoring of the three major regions of the reactor pressure vessel (RPV) (i.e., the upper vessel and flange region, the beltline region, and the bottom head region), and to extend the validity of the Unit 1 curves to 32

Effective Full Power Years (EFPY). Separate monitoring would alleviate the difficulties with meeting certain temperature requirements due to the artificial limits imposed by the current P/T curves.

In support of the proposed changes, General Electric (GE) prepared and issued GENE-523-A137-1295, ''E. I. Hatch Nuclear Power Station, P-T Curve Modification for Unit 1 and Unit 2,'' which is provided in the submittal.

Basis for proposed no significant hazards consideration determination: As required by 10 CFR 50.91(a), the licensee has provided its analysis of the issue of no significant hazards consideration which is presented below:

1. Does the change involve a significant increase in the probability or consequences of an accident previously evaluated?

Pressure and temperature (P/T) limits for the reactor pressure vessel (RPV) are established to ensure brittle fracture of the vessel does not occur.

A. The proposed changes merely clarify the Applicability of the P/T limits for each of the low pressure conditions by replacing the word ''performed'' with ''met'', adding Notes to Surveillance Requirements, incorporating the requirements of Notes into the Surveillance Requirements, and modifying the Frequency statements. Conditions 2, 3, and 4, discussed in Enclosure 1 ''justification of changes'', [of the licensee's application] have their own Surveillance Requirements. Temperature requirements for Condition 1 are specified in the Bases. This proposed change only clarifies which Surveillance Requirement applies to each operating configuration. No reduction in Surveillance Frequencies is proposed.

B. The proposed revisions to the operating limits curves for inservice leak and hydrostatic testing, and the heatup and cooldown allow independent monitoring of the three RPV regions; i.e., the bottom head, the upper vessel and flange, and the core beltline. The three Unit 1 curves, including the criticality curve, were extended to 32 Effective Full Power Years (EFPY), and a correction to the Unit 1 criticality curve was made. Operating limits for each of the curves were evaluated in accordance with the methodology given in the applicable ASME Codes; Regulatory Guide 1.99, Rev. 2, and Appendix G of 10 CFR [Part] 50.

The actual limits in the inservice leak and hydrostatic testing curves, and the heatup and cooldown curves were not relaxed. Therefore, segregating the curves into the three affected vessel regions does not represent a reduction in the actual P/T requirements. The current P/T curves represent a composite of the three regions, with each point representing the limiting region. Regions of the vessel that are not limiting at a specific point are, therefore, artificially restrained. Upon implementation of the proposed changes, each vessel region will have its own curve, with its own true limit.

Since the proposed changes do not affect the recirculation piping, the probability and the consequences of a loss of coolant accident are not increased. Likewise, no other previously evaluated accidents or transients, as defined in Chapters 14 and 15 of the Units 1 and 2 Final Safety Analysis Reports, are affected by the proposed changes.

In summary, the proposed changes do not represent a relaxation of any actual operating limit and do not reduce the Frequency of any Surveillance. Three of the four operating configurations of the RPV are covered by Surveillance Requirements. Temperature limitations for the head removed from the vessel are given in the Bases. The operating limits were developed using the approved methodology contained in 10 CFR [Part] 50, Appendix G. Therefore, the probability and consequences of a brittle fracture of the RPV are not increased.

2. Do the proposed changes create the possibility of a new or different type of accident from any previously evaluated.

Implementing the low pressure changes, or the new operating limit curves, does not alter the design or operation of any system designed for the prevention or mitigation of accidents. The proposed changes do not introduce any new type of normal or abnormal operating mode or failure mode. All P/T limits for the Unit 1 and the Unit 2 reactor vessels continue to be monitored per the requirements of 10 CFR [Part] 50, Appendices G and H. Therefore, the proposed changes do not create the possibility of a new type of accident.

3. Do the proposed changes involve a significant reduction in the margin of safety?

The purpose of the P/T limits is to ensure a brittle fracture of the RPV does not occur. The proposed Technical Specifications changes for the low pressure conditions are made for clarification purposes. No operating limits or Surveillance Requirements are relaxed. The wording of current Technical

Specifications SRs 3.4.9.1, 3.4.9.2, 3.4.9.5, 3.4.9.6, and 3.4.9.7 could result in overly conservative application of the requirements. The proposed amendment is written to remove the ambiguity in that the Applicability and Frequency of each Surveillance Requirement are clear. Neither the acceptance criteria nor the Surveillance Frequency of any Surveillance is reduced. Furthermore, the four possible RPV configurations are all adequately monitored. As a result, the margin of safety for the low pressure conditions is not significantly reduced due to the proposed changes.

The Unit 1 operating curves were extended to 32 EFPY using approved methodologies. More operational margin is provided, because the three vessel regions (upper vessel and flange, beltline, and bottom head) are being separated for the inservice leak and hydrostatic testing curve, and the heatup and cooldown curve. Although this separation results in more operating margin for certain vessel regions, it does not represent a significant reduction in the margin of safety. As described previously, the current Technical Specifications curves represent a composite of the three regions. Thus, the curves represent the temperature for the limiting region at a particular point. The regions that are not limiting at a particular point are artificially restricted. Separating the three regions, as proposed, eliminates false limits. The true limit for each region is preserved and uncompromised, based on the use of approved methodologies.

The NRC staff has reviewed the licensee's analysis and, based on this review, it appears that the three standards of 10 CFR 50.92(c) are satisfied. Therefore, the NRC staff proposes to determine that the amendment request involves no significant hazards consideration.

Local Public Document Room location: Appling County Public Library, 301 City Hall Drive, Baxley, Georgia 31513

Attorney for licensee: Ernest L. Blake, Jr., Esquire, Shaw, Pittman, Potts and Trowbridge, 2300 N Street, NW., Washington, DC 20037

NRC Project Director: Herbert N. Berkow

Georgia Power Company, Oglethorpe Power Corporation, Municipal Electric Authority of Georgia, City of Dalton, Georgia, Docket Nos. 50-321 and 50-366, Edwin I. Hatch Nuclear Plant, Units 1 and 2, Appling County, Georgia

Date of amendment request: October 7, 1996

Description of amendment request: The proposed changes to Plant Hatch Unit 1 and Unit 2 Technical Specifications (TS) would revise Surveillance Requirements (SR) 3.1.7.7 and 3.4.3.1, and Limiting Conditions for Operation (LCO) 3.4.3, 3.5.1, and 3.6.1.6, to increase the nominal mechanical pressure relief setpoints for all of the 11 safety/relief valves (SRV) to 1150 psig and allow operation with one SRV and its associated functions inoperable. The proposed changes would reduce the potential for SRV pilot leakage and the potential for forced outages due to an inoperable SRV during a fuel cycle.

The existing TS require that during continuous operation, all of the 11 SRVs remain OPERABLE in the safety mode, 7 in the Automatic Depressurization System (ADS) mode, and 4 in the Low-Low Set (LLS) mode. If one SRV is inoperable for longer than the duration specified in the applicable Action Statements, the plant must be placed in a Cold Shutdown Condition. Analyses have been completed which show that, with one SRV out of service, all transient/accident criteria can still be met. Increasing the nominal mechanical relief setpoints will increase the simmer margin (i.e., the difference between the SRV setpoints and the vessel steam dome pressure), thereby potentially reducing SRV pilot leakage which may occur during a typical operating cycle.

As a result of increasing the mechanical relief setpoints for the SRVs, the Standby Liquid Control (SLC) System pump test discharge pressure is increased to 1232 psig. The High Pressure Coolant Injection (HPCI) and Reactor Core Isolation Cooling (RCIC) systems are capable of operating at this increased pressure.

In support of the proposed changes, General Electric (GE) prepared NEDC-32041P, ''Safety Review for Edwin I. Hatch Nuclear Power Plant Units 1 and 2 Updated Safety/Relief Valve Performance Requirements,'' Revision 2, dated April 1996, which was included in the submittal.

Basis for proposed no significant hazards consideration determination: As required by 10 CFR 50.91(a), the licensee has provided its analysis of the issue of no significant hazards consideration which is presented below:

1. The changes do not involve a significant increase in the probability or consequences of an accident previously evaluated.

The SRVs serve to mitigate postulated transients and accidents; the proposed changes do not alter the function or mode of operation of the SRVs. The probability of an OPERABLE or an INOPERABLE SRV inadvertently opening or failing to open or close is not affected by these changes. Therefore, the probability of an accident is not increased. Analysis[(a)] has been performed which considers the consequences of the various transients and accidents with the increased setpoints and with one SRV inoperable. The analysis also considers the impact on ECCS [Emergency Core Cooling System] performance, including HPCI and RCIC. The analysis has shown that the consequences of an accident with the increased SRV setpoints and with one SRV inoperable are not increased.

2. The proposed changes do not create the possibility of a new or different kind of accident from any accident previously analyzed.

Revising the nominal SRV setpoint only changes when the SRV opens in its mechanical relief mode; the operation of the SRV and any other existing equipment is not altered. Operation with one SRV inoperable was evaluated[(a)] and does not introduce any new failure modes. The impact on the operation and design of other systems and components has been evaluated,[(a)] including ECCS and SLC. No new operating modes or failure modes are introduced. Thus, these changes do not contribute to a new or different type of accident.

3. The proposed changes do not involve a significant reduction in the margin of safety.

The change in SRV setpoint and operation with one SRV inoperable was evaluated relative to the applicable safety system settings and found to remain acceptable. For example, the proposed changes were evaluated against peak clad temperature limits, ECCS operation, ASME Code overpressurization limits, the MINIMUM CRITICAL POWER RATIO Safety Limit, and containment design limits; no significant reduction in the margin of safety was identified[(a)].

(a) GE Report NEDC-32041P, ''Safety Review for Edwin I. Hatch Nuclear Power Plant Units 1 and 2 Updated Safety/Relief Valve Performance Requirements, Revision 2 (Proprietary), April 1996''.

The NRC staff has reviewed the licensee's analysis and, based on this review, it appears that the three standards of 10 CFR 50.92(c) are satisfied. Therefore, the NRC staff proposes to determine that the amendment request involves no significant hazards consideration.

Local Public Document Room location: Appling County Public Library, 301 City Hall Drive, Baxley, Georgia 31513

Attorney for licensee: Ernest L. Blake, Jr., Esquire, Shaw, Pittman, Potts and Trowbridge, 2300 N Street, NW., Washington, DC 20037

NRC Project Director: Herbert N. Berkow

Georgia Power Company, Oglethorpe Power Corporation, Municipal Electric Authority of Georgia, City of Dalton, Georgia, Docket Nos. 50-321 and 50-366, Edwin I. Hatch Nuclear Plant, Units 1 and 2, Appling County, Georgia

Date of amendment request: October 29, 1996

Description of amendment request: The proposed amendments would change the Technical Specifications (TS) for Plant Hatch Units 1 and 2 associated with the installation of a digital Power Range Neutron Monitoring (PRNM) system and the incorporation of long-term stability solution hardware.

In response to Generic Letter 94-02, ''Thermal-Hydraulic Instabilities in Boiling Water Reactors,'' Georgia Power Company (GPC) selected General Electric (GE) Option III as the long-term stability solution. Option III detects core instabilities and provides a reactor scram signal to the Reactor Protection System (RPS). The long-term stability solution, GE Option III, is supported by the BWR Owners' Group Topical Report NEDO-31960-A submitted to the NRC for approval in May 1991, and NEDO-31960-A, Supplement 1, submitted to the NRC for approval in March 1992. The NRC issued a Safety Evaluation Report (SER) for NEDO-31960-A and Supplement 1 in July 1993. BWR Owners' Group Topical Report NEDO-32465, submitted to the NRC in June 1995, provides additional analysis for the detection and suppression methodology (Option III).

To execute the stability solution software, the Average Power Range Monitor (APRM) and Rod Block Monitor (RBM) electronics would be replaced with a PRNM system based on digital GE Nuclear Measurements Analysis and Control NUMAC modules. Implementation of the PRNM would affect the RPS and Control Rod Block TS 3.3.1.1, 3.3.2.1, 3.4.1 and 3.10.8.

Basis for proposed no significant hazards consideration determination: As required by 10 CFR 50.91(a), the licensee has provided its analysis of the issue of no significant hazards consideration which is presented below:

1. The proposed changes do not involve a significant increase in the probability or consequences of an accident previously evaluated.

The purpose of the proposed amendment is to incorporate the Power Range Neutron Monitoring (PRNM) retrofit and Oscillation Power Range Monitor (OPRM) installation. The types of Average Power Range Monitor (APRM) Functions that are credited to mitigate accidents were previously evaluated. The proposed OPRM Upscale Function is implemented in the same hardware that implements the APRM Functions. The change to a two-out-of-four RPS [Reactor Protection System] logic was analyzed and determined to be equal to the original logic.

The modification involves equipment that is intended to detect the symptoms of some accidents and initiate mitigating action. The worst case failure of the equipment involved in the modification is a failure to initiate mitigating action (scram), but no failure can cause an accident. As discussed in the bases for proposed changes, the PRNM replacement system is designed to perform the same operations as the existing Power Range Monitoring (PRM) system and to meet or exceed all of its operational requirements. Therefore, it is concluded that the probability of an accident previously evaluated is not increased as a result of replacing the existing equipment with the PRNM equipment.

* * * *

Human-machine interface (HMI) failures in the current system could be related to incorrectly adjusted settings, incorrect reading of meters, and failure to return the equipment to the normal operating configuration. There are comparable failure modes for some of these problems in the digital system where an erroneous potentiometer adjustment in the current system is equivalent to an erroneous digital entry in the replacement system. Certain potential ''failure to reconfigure errors'' in the current system have no counterpart in the replacement system, because any reconfiguration'' is automatically returned to normal by the system. Also, since parameters are available for review at any time, even if an error, such as a digital entry error occurs, it is more likely that the error would be almost immediately detected by recognition that the displayed value is not the correct one.

The failure analysis of the current system assumes certain rates of human error. The rates for the replacement system will be lower and, hence, are bounded by the FSAR [Final Safety Analysis Report] analysis.

Therefore, GPC [Georgia Power Company] concludes the proposed changes do not

involve a significant increase in the probability or consequences of an accident previously evaluated.

2. The proposed changes do not create the possibility of a new or different kind of accident from any accident previously evaluated.

The APRM Trip Functions credited in the accident analyses are retained in the PRNM retrofit. The response time of the new electronics meets or exceeds the required response criteria. No new interfaces or interactions with other equipment will introduce any new failure modes.

The modification involves equipment that is intended to detect the symptoms of some accidents and initiate mitigating action. The worst-case failure of the equipment involved in the modification is a failure to initiate mitigating action (scram), but no failure can cause an accident. This is unchanged from the current system.

Software common-cause failures can at most cause the system to fail to perform its safety function. In that case, it could fail to initiate action to mitigate the consequences of an accident, but would not cause one.

The new system is a digital system with software (firmware) control. As such, it has ''central'' processing points and software controlled digital processing where the current system had analog and discrete component processing. The result is that the specific failures of hardware and potentially common-cause software failures are different from the current system. Also, automatic self-test results in some cases in a direct trip as a result of a hardware failure where the current system may have remained ''as-is''. However, when these are evaluated at the system level, there are no new effects. In general, FSARs assume simplistic failure modes (relays for example) but do not specifically evaluate such effects as self-test detection and automatic trip or alarm.

The effects of software common-cause failure are mitigated by hardware design and system architecture. The replacement equipment is fully qualified to operate in its installed location and will not affect other equipment.

Therefore, GPC concludes the proposed changes do not create the possibility of a new or different kind of accident from any accident previously evaluated.

3. The proposed changes do not involve a significant reduction in a margin of safety.

The replacement equipment provides the same function as the original electronics. Response time and operator information are either maintained or improved. The equipment was qualified, where appropriate, to assure its intended safety function is performed. The replacement system has improved channel trip accuracy compared to the current system and meets or exceeds system requirements assumed in setpoint analysis. The channel response time exceeds the requirements. The channel indicated accuracy is improved over the current system, and meets or exceeds system requirements. The replacement system meets or exceeds all system requirements.

The BWROG [BWR Owners' Group] Stability Option III was developed to meet the requirements of GDC [General Design Criterion] 10 and GDC 12 by providing a hardware system that detects the presence of thermal-hydraulic instabilities and automatically initiates the necessary actions to suppress the oscillations prior to violating the MCPR [maximum critical power ratio] Safety Limit. The NRC has reviewed and accepted the Option III methodology described in Licensing Topical Report NEDO-31960 and concluded this solution will provide the intended protection. Therefore, it is concluded that there will be no reduction in the margin of safety as defined in the Technical Specifications as a result of the installation of the OPRM system and the simultaneous removal of the operating restrictions imposed by the ICAs [item control areas].

Therefore, GPC concludes the proposed changes do not involve a significant reduction in a margin of safety.

The NRC staff has reviewed the licensee's analysis and, based on this review, it appears that the three standards of 10 CFR 50.92(c) are satisfied. Therefore, the NRC staff proposes to determine that the amendment request involves no significant hazards consideration.

Local Public Document Room location: Appling County Public Library, 301 City Hall Drive, Baxley, Georgia 31513

Attorney for licensee: Ernest L. Blake, Jr., Esquire, Shaw, Pittman, Potts and Trowbridge, 2300 N Street, NW., Washington, DC 20037

NRC Project Director: Herbert N. Berkow

Omaha Public Power District, Docket No. 50-285, Fort Calhoun Station, Unit No. 1, Washington County, Nebraska

Date of amendment request: November 20, 1996

Description of amendment request: The proposed amendment would revise the technical specifications (TS) to allow the Vice President to designate the Safety Audit and Review Committee (SARC) Chairperson, to change the work hours limitation in accordance with guidance in GL 82-12, ''Nuclear Power Plant Staff Working Hours;'' to change radioactive shipments record retention requirements to comply with recent 10 CFR Part 20 changes; and other editorial changes.

Basis for proposed no significant hazards consideration determination: As required by 10 CFR 50.91(a), the licensee has provided its analysis of the issue of no significant hazards consideration, which is presented below:

1. The changes requested are administrative in nature. Paragraph 3.D was placed in the License by Amendment No. 155 to authorize Omaha Public Power District (OPPD) to increase the storage capacity of the FCS spent fuel pool. Amendment No. 155 stated that the TS as issued would be effective when the last new rack was installed. Since the last new rack was installed on

August 8, 1994, Paragraph 3.D is no longer necessary and should

be deleted from the License.

Table of Contents, Section 6.0, ''Interim Special Technical Specifications,'' Subsections 6.1 through 6.4 are proposed for deletion because all of the Specifications referred to have been deleted by previous Amendments.

The revision proposed for TS 2.15 (Item 2C of Table 2-3 & Item 1C of Table 2-4) will insert the correct terminology (Pressurizer Low/Low Pressure) into the Functional Unit description.

The revision proposed for TS 5.2 will require the control of overtime worked by personnel to be in accordance with the NRC Policy Statement on working hours (Generic Letter 82-12) in lieu of stating the specific times requirements from the Policy as the current TS does. This option is in accordance with NUREG-1432, Standard TS for Combustion Engineering Plants, Specification 5.2.2e, and will allow work groups to be on twelve hour shifts.

The revision proposed for TS 5.5.2.2 will replace the specific title of the Chairperson of the Safety Audit and Review Committee and replace it with ''Member as appointed by the Vice President.'' This will allow the flexibility to change chairmanship of the committee amongst the members.

The revision to TS 5.10 concerning retention of records of radioactive shipments will update the TS to current 10 CFR 20 requirements. Plant procedures already comply with current 10 CFR 20 record retention requirements. The addition of the Section 5.0 title corrects a minor format discrepancy.

These proposed revisions are administrative in nature. The proposed revisions have no effect on any initial assumptions or operating restrictions assumed in any accident, nor do these changes have any effect on equipment required to mitigate the consequences of an accident. Therefore the proposed revisions do not involve a significant increase in the probability or consequences of an accident previously evaluated.

2. The proposed change does not create the possibility of a new or different kind of accident from any accident previously evaluated.

The proposed revisions correct minor errors, remove outdated information, are consistent with changes in organizational structure, 10 CFR Part 20, or NUREG-1432, ''Combustion Engineering Standard Technical Specifications (STS). These changes will not result in any physical alterations to the plant configuration, changes to setpoint values, or changes to the application of setpoints or limits. No new operating modes are proposed as a result of these changes. Therefore the proposed changes do not create the possibility of a new or different kind of accident from any accident previously evaluated.

3. The proposed change does not involve a significant reduction in a margin of safety.

The revisions listed above correct minor errors, remove outdated information, or are consistent with changes in organizational structure, 10 CFR Part 20, or Standard TS. These changes will not result in any physical alterations to the plant configuration, changes to setpoint values, or changes to the application of setpoints or limits. Therefore the proposed changes do not involve a significant reduction in a margin of safety.

The NRC staff has reviewed the licensee's analysis and, based on this review, it appears that the three standards of 10 CFR 50.92(c) are satisfied. Therefore, the NRC staff proposes to determine that the amendment request involves no significant hazards consideration.

Local Public Document Room location: W. Dale Clark Library, 215 South 15th Street, Omaha, Nebraska 68102

Attorney for licensee: Perry D. Robinson, Winston & Strawn, 1400 L Street, N.W., Washington, DC 20005-3502

NRC Project Director: William H. Bateman

Toledo Edison Company, Centerior Service Company, and The Cleveland Electric Illuminating Company, Docket No. 50-346, Davis-Besse Nuclear Power Station, Unit No. 1, Ottawa County, Ohio

Date of amendment request: October 28, 1996

Description of amendment request: The proposed amendment would revise Technical Specification (TS) Section 3/4.8.1, ''A.C. Sources,'' TS Section 3/4.8.2, ''Onsite Power Distribution Systems,'' TS Table 4.8.1, ''Battery Surveillance Requirements,'' and the associated bases. Surveillance requirements would be modified to account for the increase in the fuel cycle, consistent with Generic Letter 91-04, ''Changes in Technical Specification Surveillance Intervals to Accommodate a 24-month Fuel Cycle,'' dated April 2, 1991. Administrative changes are also proposed.

Basis for proposed no significant hazards consideration determination: As required by 10 CFR 50.91(a), the licensee has provided its analysis of the issue of no significant hazards consideration, which is presented below:

Toledo Edison has reviewed the proposed changes and determined that a significant hazards consideration does not exist because operation of the Davis-Besse Nuclear Power Station, Unit No. 1, in accordance with these changes would:

1a. Not involve a significant increase in the probability of an accident previously evaluated because no such accidents are affected by the proposed revisions to increase the surveillance test intervals from 18 to 24 months for the A.C. Offsite Sources, the Emergency Diesel Generators and the Station Batteries or the proposed revision to remove the ''during shutdown'' restriction for conduct of the battery performance test.

Results of the review of historical 18 month surveillance data and maintenance records support an increase in the surveillance test intervals from 18 to 24 months (and up to 30 months on a non-routine basis) because no potential for a significant increase in a failure rate of a system or component was identified during these reviews.

These proposed revisions are consistent with the NRC guidance on evaluating and proposing such revisions as provided in Generic Letter 91-04, ''Changes in Technical Specification Surveillance Intervals to Accommodate a 24-Month Fuel Cycle,'' dated April 2, 1991.

Initiating conditions and assumptions remain as previously analyzed for accidents in the DBNPS Updated Safety Analysis Report.

These revisions do not involve any physical changes to systems or components, nor do they alter the typical manner in which the systems or components are operated.

The proposed revision to reflect that the battery charger performance test will continue to be conducted on a[n] 18 month surveillance interval is an administrative change and does not affect previously analyzed accidents.

The proposed revision to the Bases to reflect that a change to a 24 month surveillance test interval is an exception to current guidance is an administrative change and does not affect previously analyzed accidents.

1b. Not involve a significant increase in the consequences of an accident previously evaluated because the source term, containment isolation or radiological releases are not being changed by these proposed revisions. Existing system and component redundancy is not being changed by these proposed changes. Existing system and component operation is not being changed by these proposed changes and the assumptions used in evaluating the radiological consequences in the DBNPS Updated Safety Analysis Report are not invalidated.

2. Not create the possibility of a new or different kind of accident from any accident previously evaluated because these revisions do not involve any physical changes to systems or components, nor do they alter the typical manner in which the systems or components are operated.

No changes are being proposed to the type of testing currently being performed, only to the length of the surveillance test interval and to restrictions on conducting testing only during shutdown conditions.

Results of the review of historical 18 month surveillance data and maintenance records support an increase in the surveillance test intervals from 18 to 24 months (and up to 30 months on a non-routine basis) because no potential for a significant increase in a failure rate of a system or component was identified during these reviews.

The proposed revision to reflect that the battery charger performance test will continue to be conducted on a[n] 18 month surveillance interval is an administrative change and does not alter testing currently being performed.

The proposed revision to the Bases to reflect that a change to a 24 month surveillance test interval is an exception to current guidance is an administrative change and does not alter testing currently being performed.

3. Not involve a significant reduction in a margin of safety because the results of the historical 18 month surveillance data and maintenance records review identified no potential for a significant increase in a failure rate of a system or component due to increasing the surveillance test interval to 24 months. Existing system and component redundancy is not being changed by these proposed changes.

There are no new or significant changes to the initial conditions contributing to accident severity or consequences, consequently there are no significant reductions in a margin of safety.

The NRC staff has reviewed the licensee's analysis and, based on this review, it appears that the three standards of 10 CFR 50.92(c) are satisfied. Therefore, the NRC staff proposes to determine that the amendment request involves no significant hazards consideration.

Local Public Document Room location: University of Toledo, William Carlson Library, Government Documents Collection, 2801 West Bancroft Avenue, Toledo, Ohio 43606

Attorney for licensee: Jay E. Silberg, Esquire, Shaw, Pittman, Potts and Trowbridge, 2300 N Street, NW., Washington, DC 20037

NRC Project Director: Gail H. Marcus

Virginia Electric and Power Company, Docket Nos. 50-338 and 50-339, North Anna Power Station, Units No. 1 and No. 2, Louisa County, Virginia

Date of amendment request: November 26, 1996

Description of amendment request: The proposed changes would eliminate the records retention requirements from the administrative section of the Technical Specifications (TS) in accordance with NRC Administrative Letter95-06, ''Relocation of Technical Specifications Administrative Controls Related to Quality Assurance.''

Basis for proposed no significant hazards consideration determination: As required by 10 CFR 50.91(a), the licensee has provided its analysis of the issue of no significant hazards consideration, which is presented below:

Specifically, operation of the ... North Anna Power [Station] in accordance with the proposed Technical Specifications changes will not:

(1) Involve a significant increase in the probability or consequences of an accident previously evaluated. The proposed administrative changes do not affect equipment or its operation. Therefore, the likelihood that an accident will occur is neither increased nor decreased by relocating record retention requirements from the Technical Specifications to the Operational Quality Assurance Program. This TS change will not impact the function or method of operation of plant equipment. Thus, a significant increase in the probability of a previously analyzed accident does not result due to this change. No systems, equipment, or components are affected by the proposed changes. Thus, the consequences of any accident previously evaluated in the UFSAR [Updated Final Safety Analysis Report] are not increased by this change.

(2) Create the possibility of a new or different kind of accident from any accident previously evaluated. The proposed change does not alter the design or operations of the physical plant. Since record retention requirements are administrative in nature, a change to these requirements does not contribute to accident initiation, an administrative change related to this activity does not produce a new accident scenario or produce a new type of equipment malfunction. [These] changes do not alter any existing accident scenarios. The proposed administrative change does not affect equipment or its operation, and, thus, does not create the possibility of a new or different kind of accident. Therefore, the proposed change does not create the possibility of a new or different kind of accident.

(3) Involve a significant reduction in a margin of safety. Section 6.0 of the North Anna ... Technical Specifications does not have a basis description. The proposed administrative change does not affect equipment or its operation, and, thus, does not involve any reduction in the margin of safety.

The NRC staff has reviewed the licensee's analysis and, based on this review, it appears that the three standards of 50.92(c) are satisfied. Therefore, the NRC staff proposes to determine that the amendment request involves no significant hazards consideration.

Local Public Document Room location: The Alderman Library, Special Collections Department, University of Virginia, Charlottesville, Virginia 22903-2498.

Attorney for licensee: Michael W. Maupin, Esq., Hunton and Williams, Riverfront Plaza, East Tower, 951 E. Byrd Street, Richmond, Virginia 23219.

NRC Project Director: Mark Reinhart, Acting

Wolf Creek Nuclear Operating Corporation, Docket No. 50-482, Wolf Creek Generating Station, Coffey County, Kansas

Date of amendment request: December 3, 1996

Description of amendment request: This amendment request proposes to revise the technical specifications associated with the inspection of the reactor coolant flywheel to provide an exception to the recommendations of Regulatory Guide 1.14, Revision 1, ''Reactor Coolant Pump Flywheel Integrity.'' The proposed exception would allow either an ultrasonic volumetric examination or surface examination to be performed at approximately 10-year intervals. In addition, a correction of the issuance date of a referenced regulatory guide is included.

Basis for proposed no significant hazards consideration determination: As required by 10 CFR 50.91(a), the licensee has provided its analysis of the issue of no significant hazards consideration, which is p presented below:

1. The proposed change does not involve a significant increase in the probability or consequences of an accident previously evaluated.

The safety function of the RCP [reactor coolant pump] flywheels is to provide a coastdown period during which the RCPs would continue to provide reactor coolant flow to the reactor after loss of power to the RCPs. The maximum loading on the RCP flywheel results from overspeed following a LOCA [loss-of-coolant accident]. The maximum obtainable speed in the event of a LOCA was predicted to be less than 1500 rpm. Therefore, a peak LOCA speed of 1500 rpm is used in the evaluation of RCP flywheel integrity in WCAP-14535. This integrity evaluation shows a very high flaw tolerance for the flywheels. The proposed change does not affect that evaluation. Reduced coastdown times due to a single failed flywheel is bounded by the locked rotor analysis, therefore, it would not place the plant in an unanalyzed condition. Therefore, these changes do not involve a significant increase in the probability or consequences of an accident previously evaluated.

2. The proposed change does not create the possibility of a new or different kind of accident from any accident previously evaluated.

The proposed amendment does not create the possibility of a new or different kind of accident from any previously evaluated since the proposed amendments will not change the physical plant or the modes of plant operation defined in the facility operating license. No new failure mode is introduced due to the proposed change, since the proposed change does not involve the addition or modification of equipment, nor do they alter the design or operation of affected plant systems, structures, or components.

3. The proposed change does not involve a significant reduction in a margin of safety.

The operating limits and functional capabilities of the affected systems, structures, and components are basically unchanged by the proposed amendment. The results of the flywheel inspections performed have identified no indications affecting flywheel integrity. As identified in WCAP-14535, detailed stress analysis as well as risk analysis have been completed with the results indicating that there would be no change in the probability of failure for RCP flywheels if all inspections were eliminated. Therefore these changes do not involve a significant reduction in the margin of safety.

The NRC staff has reviewed the licensee's analysis and, based on this review, it appears that the three standards of 10 CFR 50.92(c) are satisfied. Therefore, the NRC staff proposes to determine that the amendment request involves no significant hazards consideration.

Local Public Document Room locations: Emporia State University, William Allen White Library, 1200 Commercial Street, Emporia, Kansas 66801 and Washburn University School of Law Library, Topeka, Kansas 66621

Attorney for licensee: Jay Silberg, Esq., Shaw, Pittman, Potts and Trowbridge, 2300 N Street, N.W., Washington, D.C. 20037

NRC Project Director: William H. Bateman

Wolf Creek Nuclear Operating Corporation, Docket No. 50-482, Wolf Creek Generating Station, Coffey County, Kansas

Date of amendment request: December 3, 1996

Description of amendment request: This amendment request proposes to correct the reference to the Action Statement for Item 7.b, RWST Level - Low-Low Coincident with Safety Injection, Table 3.3-3, Engineered Safety Features Actuation System Instrumentation, from Action 16 to Action 28.

Basis for proposed no significant hazards consideration determination: As required by 10 CFR 50.91(a), the licensee has provided its analysis of the issue of no significant hazards consideration, which is presented below:

1. The proposed change does not involve a significant increase in the probability or consequences of an accident previously evaluated.

Changing the reference from Action Statement 16 to Action Statement 28 for Functional Unit 7.b. of Table 3.3-3 will reduce the probability for an automatic switchover from the RWST [refueling water storage tank] to an empty containment sump to occur, while an RWST level channel is inoperable or is being tested with its bistable tripped, should an inadvertent safety injection signal occur concurrent with a single failure of a second RWST level channel. The design of these channels does not allow for operation or testing in bypass, so Action Statement 16 is not applicable. Changing to Action Statement 28 will limit

the duration that a channel could be inoperable or be in test with its bistable bypassed. This change does not involve any design changes or hardware modifications, and does not introduce any new potential accident initiating conditions. The increase in allowed outage time for this item was evaluated and the associated unavailability and risk was shown to be equivalent to, or less than, that of other functional units evaluated in WCAP-10271, Supplement 2, Revision 1. Therefore, this proposed change does not increase the probability of any accident previously evaluated.

2. The proposed change does not create the possibility of a new or different kind of accident from any accident previously evaluated.

The proposed change does not result in any hardware changes and does not result in a change in the manner in which the ESFAS [engineered safety features actuation system] provides plant protection. This change does not alter the functioning of the ESFAS. Rather, the likelihood or probability of the ESFAS functioning properly is affected as described above. This change will not change the method by which any safety-related system performs its function. Therefore, this proposed change will not create the possibility of a new or different kind of accident from any previously evaluated.

3. The proposed change does not involve a significant reduction in a margin of safety.

This proposed change will not result in a significant reduction in the margin of safety defined for any technical specification since it does not alter the manner in which safety limits, limiting safety system settings, or limiting conditions for operation are determined.

The NRC staff has reviewed the licensee's analysis and, based on this review, it appears that the three standards of 10 CFR 50.92(c) are satisfied. Therefore, the NRC staff proposes to determine that the amendment request involves no significant hazards consideration.

Local Public Document Room locations: Emporia State University, William Allen White Library, 1200 Commercial Street, Emporia, Kansas 66801 and Washburn University School of Law Library, Topeka, Kansas 66621

Attorney for licensee: Jay Silberg, Esq., Shaw, Pittman, Potts and Trowbridge, 2300 N Street, N.W., Washington, D.C. 20037

NRC Project Director: William H. Bateman

Notice Of Issuance Of Amendments To Facility Operating Licenses

During the period since publication of the last biweekly notice, the Commission has issued the following amendments. The Commission has determined for each of these amendments that the application complies with the standards and requirements of the Atomic Energy Act of 1954, as amended (the Act), and the Commission's rules and regulations. The Commission has made appropriate findings as required by the Act and the Commission's rules and regulations in 10 CFR Chapter I, which are set forth in the license amendment.

Notice of Consideration of Issuance of Amendment to Facility Operating License, Proposed No Significant Hazards Consideration Determination, and Opportunity for A Hearing in connection with these actions was published in the Federal Register as indicated.

Unless otherwise indicated, the Commission has determined that these amendments satisfy the criteria for categorical exclusion in accordance with 10 CFR 51.22. Therefore, pursuant to 10 CFR 51.22(b), no environmental impact statement or environmental assessment need be prepared for these amendments. If the Commission has prepared an environmental assessment under the special circumstances provision in 10 CFR 51.12(b) and has made a determination based on that assessment, it is so indicated.

For further details with respect to the action see (1) the applications for amendment, (2) the amendment, and (3) the Commission's related letter, Safety Evaluation and/or Environmental Assessment as indicated. All of these items are available for public inspection at the Commission's Public Document Room, the Gelman Building, 2120 L Street, NW., Washington, DC, and at the local public document rooms for the particular facilities involved.

Arizona Public Service Company, et al., Docket Nos. STN 50-528, STN 50-529, and STN 50-530, Palo Verde Nuclear Generating Station, Units 1, 2, and 3, Maricopa County, Arizona

Date of application for amendments: June 28, 1996

Brief description of amendments: The amendment would modify the technical specifications (TS) to increase the minimum required amount of anhydrous trisodium phosphate (TSP) in the containment baskets. TSP is used to ensure that following a postulated design basis loss of coolant accident (LOCA), the containment sump pH is maintained greater than or equal to seven.

Date of issuance: December 10, 1996

Effective date: December 10, 1996, to be implemented within 45 days from the date of issuance.

Amendment Nos.: Unit 1 - 110; Unit 2 - 102; Unit 3 - 82

Facility Operating License Nos. NPF-41, NPF-51, and NPF-74: The amendments revised the Technical Specifications.

Date of initial notice in Federal Register: September 11, 1996 (61 FR 47962) The Commission's related evaluation of the amendments is contained in a Safety Evaluation dated December 10, 1996.No significant hazards consideration comments received: No.

Local Public Document Room location: Phoenix Public Library, 1221 N. Central Avenue, Phoenix, Arizona 85004

Duke Power Company, Docket Nos. 50-369 and 50-370, McGuire Nuclear Station, Units 1 and 2, Mecklenburg County, North Carolina

Date of application for amendments: June 21, 1996

Brief description of amendments: The amendments revise the term ''lifting loads'' used in Technical Specification 3.9.6b.2, Manipulator Crane, to ''lifting force.'' This revision will clarify that the static loads associated with the lifting tool, drive rod, and control rod weights are not included in the lifting force limit.

Date of issuance: December 12, 1996

Effective date: As of the date of issuance to be implemented within 30 days

Amendment Nos.: 171 and 153

Facility Operating License Nos. NPF-9 and NPF-17: Amendments revised the Technical Specifications.

Date of initial notice in Federal Register: September 11, 1996 (61 FR 47977) The Commission's related evaluation of the amendments is contained in a Safety Evaluation dated December 12, 1996.No significant hazards consideration comments received: No

Local Public Document Room location: Atkins Library, University of North Carolina, Charlotte (UNCC Station), North Carolina 28223

Illinois Power Company and Soyland Power Cooperative, Inc., Docket No. 50-461, Clinton Power Station, Unit No. 1, DeWitt County, Illinois

Date of application for amendment: February 22, 1996, and as supplemented by letters dated July 4 and September 20, 1996

Brief description of amendment: The amendment revises Clinton Power Station Technical Specification 3.3.4.1, ''End of Cycle Recirculation Pump Trip (EOC-RPT) Instrumentation,'' by deleting Surveillance Requirement 3.3.4.1.6 which requires the RPT breaker interruption time to be determined at least once per 60 months.

Date of issuance: December 13, 1996

Effective date: December 13, 1996

Amendment No.: 111

Facility Operating License No. NPF-62: The amendment revised the Technical Specifications.

Date of initial notice in Federal Register: April 24, 1996 (61 FR 18169) The supplemental letters of July 4 and September 20, 1996, provided clarifying information and did not include significant changes relative to the original Federal Register notice.The Commission's related evaluation of the amendment is contained in a Safety Evaluation dated December 13, 1996.No significant hazards consideration comments received: No

Local Public Document Room location: The Vespasian Warner Public Library, 120 West Johnson Street, Clinton, Illinois 61727

Niagara Mohawk Power Corporation, Docket No. 50-220, Nine Mile Point Nuclear Station Unit No. 1, Oswego County, New York

Date of application for amendment: July 12, 1996, as supplementedOctober 30, 1996.

Brief description of amendment: The amendment revises TS 6.2.2.h regarding the administrative controls for the normal working hours of unit staff who perform safety-related functions, and TS 6.2.2.i regarding an organizational change. The changes authorize (1) establishment of unit staff work schedules that average 40 hours per week using shifts as long as 12 hours, and (2) elimination of the positions of General Supervisor Operations and Supervisor Operations.

Date of issuance: December 12, 1996

Effective date: As of the date of issuance to be implemented within 30 days.

Amendment No.: 158

Facility Operating License No. DPR-63: Amendment revises the Technical Specifications.

Date of initial notice in Federal Register: August 14, 1996 (61 FR 42280) The October 30, 1996, letter provided supplemental information that did not change the initial no significant hazards consideration determination. The Commission's related evaluation of the amendment is contained in a Safety Evaluation dated December 12, 1996.No significant hazards consideration comments received: No

Local Public Document Room location: Reference and Documents Department, Penfield Library, State University of New York, Oswego, New York 13126.

Niagara Mohawk Power Corporation, Docket No. 50-410, Nine Mile Point Nuclear Station, Unit 2, Oswego County, New York

Date of application for amendment: July 12, 1996

Brief description of amendment: The amendment revises Technical Specification Section 6.2.2.i regarding the administrative controls for the normal working hours of unit staff who perform safety-related functions. The change allows the establishment of unit staff work schedules that average 40 hours per week using shifts as long as 12 hours.

Date of issuance: December 12, 1996

Effective date: As of the date of issuance to be implemented within 30 days.

Amendment No.: 78

Facility Operating License No. NPF-69: Amendment revises the Technical Specifications.

Date of initial notice in Federal Register: August 14, 1996 (61 FR 42281) The Commission's related evaluation of the amendment is contained in a Safety Evaluation dated December 12, 1996.No significant hazards consideration comments received: No

Local Public Document Room location: Reference and Documents Department, Penfield Library, State University of New York, Oswego, New York 13126.

Pennsylvania Power and Light Company, Docket Nos. 50-387 and 50-388 Susquehanna Steam Electric Station, Units 1 and 2, Luzerne County, Pennsylvania

Date of application for amendments: July 28, 1995, as supplemented October 25, 1995, and August 9, 1996

Brief description of amendments: The amendments revise the 250 volt DC profiles in the Technical Specifications for the two units to reflect new load profile calculations.

Date of issuance: December 17, 1996

Effective date: Unit 1, as of date of issuance, to be implemented within 30 days; Unit 2, as of date of issuance, to be implemented prior to Startup following the Eighth Refueling and Inspection Outage for Unit 2, which is scheduled for the Spring of 1997.

Amendment Nos.: 162 and 133

Facility Operating License Nos. NPF-14 and NPF-22. The amendments revised the Technical Specifications.

Date of initial notice in Federal Register: September 13, 1995 (60 FR 47622) The supplemental letters provided clarifying information that did not change the initial proposed no significant hazards consideration determination nor the Federal Register notice.The Commission's related evaluation of the amendments is contained in a Safety Evaluation dated December 17, 1996.No significant hazards consideration comments received: No

Local Public Document Room location: Osterhout Free Library, Reference Department, 71 South Franklin Street, Wilkes-Barre, PA 18701

Power Authority of the State of New York, Docket No. 50-333, James A. FitzPatrick Nuclear Power Plant, Oswego County, New York

Date of application for amendment: June 12, 1992, as supplemented September 17, 1992, March 17, 1993, August 17, 1993, August 18, 1993, December 29, 1993, June 29, 1995, August 15, 1996, October 3, 1996,October 23, 1996, November 14, 1996, November 20, 1996 (JPN-96-045), November 20, 1996 (JPN-96-046), and November 27, 1996.

Brief description of amendment: The amendment modifies

Facility Operating License No. DPR-59 and the James A. FitzPatrick Nuclear Power Plant (JAFNPP) Technical Specifications (TSs) to authorize an increase in the maximum power level of JAFNPP from 2436 MWt to 2536 MWt. The amendment also approves changes to the TSs to implement uprated power operation.

Date of issuance: December 6, 1996

Effective date:

As of the date of issuance to be implemented upon plant startup following the refueling outage cycle 13.

Amendment No.: 239

Facility Operating License No. DPR-59: Amendment revised the Technical Specifications.

Date of initial notice in Federal Register: February 2, 1994 (59 FR 4943) The letters dated September 17, 1992, March 17, 1993, August 17, 1993, August 18, 1993, December 29, 1993, June 29, 1995, August 15, 1996,October 3, 1996, October 23, 1996, November 14, 1996, November 20, 1996, (JPN-96-045), November 20, 1996, (JPN-96-046), and November 27, 1996, provided clarifying information that did not change the initial proposed no significant hazards consideration determination. The Commission's related evaluation of the amendment is contained in a Safety Evaluation dated December 6, 1996.No significant hazards consideration comments received: No

Local Public Document Room location: Reference and Documents Department, Penfield Library, State University of New York, Oswego, New York 13126.

Public Service Electric & Gas Company, Docket No. 50-311, Salem Nuclear Generating Station, Unit No. 2, Salem County, New Jersey Date of application for amendment: September 20, 1996, as supplemented September 30, 1996

Brief description of amendment: The amendment changes Technical Specification Surveillance Requirement 4.7.7.b.4 for the Auxiliary Building Exhaust Air Filtration System, and its associated Bases, to indicate that the specified flowrate applies only to system testing.

Date of issuance: December 12, 1996

Effective date: As of date of issuance, to be implemented within 30 days.

Amendment No. 168

Facility Operating License No. DPR-75: This amendment revised the Technical Specifications.

Date of initial notice in Federal Register: October 23, 1996 (61 FR 55040) The Commission's related evaluation of the amendment is contained in a Safety Evaluation dated December 12, 1996.No significant hazards consideration comments received: No

Local Public Document Room location: Salem Free Public Library, 112 West Broadway, Salem, NJ 08079

Public Service Electric & Gas Company, Docket Nos. 50-272 and 50-311, Salem Nuclear Generating Station, Unit Nos. 1 and 2, Salem County, New Jersey

Date of application for amendments: August 27, 1996, as supplemented October 24, 1996

Brief description of amendments: The amendment to Unit 2 deletes License Condition 2.C.(24)(a) which required establishment by June 3, 1981, of regularly scheduled 8-hour shifts without reliance on routine use of overtime. The amendments to both Units 1 and 2 revise Technical Specification 6.2.2 to delete the reference to Generic Letter 82-12, ''Nuclear Plant Staff Working Hours,'' and require that administrative controls be established which will ensure that adequate shift coverage is maintained without heavy use of overtime for individuals.

Date of issuance: December 17, 1996

Effective date: Both units, as of date of issuance, to be implemented within 30 days.

Amendment Nos. 186 and 169

Facility Operating License Nos. DPR-70 and DPR-75. The amendments revised the Technical Specifications for both units and License for Unit 2 only.

Date of initial notice in Federal Register: September 12, 1996 (61 FR 48175) The October 24, 1996, letter provided clarifying information that did not change the initial proposed no significant hazards consideration determination or the original notice.The Commission's related evaluation of the amendments is contained in a Safety Evaluation dated December 17, 1996.No significant hazards consideration comments received: No

Local Public Document Room location: Salem Free Public Library, 112 West Broadway, Salem, NJ 08079

Southern California Edison Company, et al., Docket Nos. 50-361 and 50-362, San Onofre Nuclear Generating Station, Unit Nos. 2 and 3, San Diego County, California

Date of application for amendments: May 29, 1996

Brief description of amendments: These amendments revise Technical Specification (TS) Surveillance Requirement 3.5.1.4 to increase the minimum boron concentration in the safety injections tanks from 1850 ppm to 2200 ppm.

Date of issuance: December 6, 1996

Effective date: December 6, 1996, to be implemented within 30 days from the date of issuance.

Amendment Nos.: Unit 2 - 135; Unit 3 - 124

Facility Operating License Nos. NPF-10 and NPF-15: The amendments revised the Technical Specifications.

Date of initial notice in Federal Register: July 31, 1996 (61 FR 40029) The Commission's related evaluation of the amendments is contained in a Safety Evaluation dated December 6, 1996. No significant hazards consideration comments received: No.Temporary

Local Public Document Room location: Science Library, University of California, P. O. Box 19557, Irvine, California 92713

Wisconsin Public Service Corporation, Docket No. 50-305, Kewaunee Nuclear Power Plant, Kewaunee County, Wisconsin

Date of application for amendment: September 27, 1996, as supplemented on October 25, and November 18, 1996

Brief description of amendment: The amendment revises Kewaunee Nuclear Power Plant Technical Specification requirements related to the low temperature overpressure protection (LTOP) system. Specifically, the LTOP curve is modified to define 10 CFR Part 50, Appendix G pressure temperature limitations for LTOP evaluation through the end of operating cycle (EOC) 33. In addition, the LTOP enabling temperature and the temperature required for starting a reactor coolant pump have been changed consistent with the design basis for the LTOP system. Finally, the TS bases were changed consistent with the changes described above.

Date of issuance: December 13, 1996

Effective date: December 13, 1996, to be implemented within 30 days.

Amendment No.: 130

Facility Operating License No. DPR-43: Amendment revised the Technical Specifications.

Date of initial notice in Federal Register: October 7, 1996 (61 FR 52472) The October 25 and November 18, 1996, submittals provided supplemental information that did not change the initial proposed no significant hazards consideration determination.The Commission's related evaluation of the amendment is contained in a Safety Evaluation dated December 13, 1996.No significant hazards consideration comments received: No.

Local Public Document Room location: University of Wisconsin, Cofrin Library, 2420 Nicolet Drive, Green Bay, Wisconsin 54311-7001

Dated at Rockville, Maryland, this 24th day of December 1996.

For the Nuclear Regulatory Commission

Steven A. Varga,

Director, Division of Reactor Projects - I/II, Office of Nuclear Reactor Regulation

[Doc. 96-33254 Filed 12-31-96; 8:45 am]

BILLING CODE 7590-01-F

SECURITIES AND EXCHANGE COMMISSION

[Release No. 34–38086; File No. SR–CBOE–96–69]

Self-Regulatory Organizations; Notice of Filing and Order Granting Accelerated Approval of Proposed Rule Change by the Chicago Board Options Exchange, Incorporated Relating to Calculating Blue Sheets Violation Aggregate Fines on a Rolling Year Basis

December 26, 1996.

Pursuant to Section 19(b)(1) of the Securities Exchange Act of 1934 (''Act'')[1], and Rule 19b–4[2] thereunder, notice is hereby given that on November 20, 1996,[3] the Chicago Board Options Exchange, Incorporated (''CBOE'' or ''Exchange'') filed with the Securities and Exchange Commission (''SEC'' or

[1] 15 U.S.C. 78s(b)(1).

[2] 17 CFR 240.19b–4.

[3] On December 17, 1996, the Exchange filed Amendment No. 1 to the proposed rule change. Amendment No. 1 is a technical amendment, correcting Exhibit I, Section I to the filing. *See* letter from Margaret Abrams, Senior Attorney, CBOE to Janice Mitnick, Attorney, Division of Market Regulation, SEC, dated December 17, 1996.

''Commission'') the proposed rule change as described in Items I and II below, which Items have been prepared by the self-regulatory organization. The Commission is publishing this notice to solicit comments on the proposed rule change from interested persons and to grant accelerated approval of the proposed rule change.

I. Self-Regulatory Organization's Statement of the Terms of Substance of the Proposed Rule Change

The Exchange proposes to amend its minor rule violation plan so that automated submission of trading data (''Blue Sheets'') violation aggregate fines are calculated on a rolling year basis. The text of the proposed rule change is available at the Office of the Secretary, CBOE and at the Commission.

II. Self-Regulatory Organization's Statement of the Purpose of, and Statutory Basis for, the Proposed Rule Change

In its filing with the Commission, the self-regulatory organization included statements concerning the purpose of the basis for the proposed rule change, and discussed any comments it received on the proposed rule change. The text of these statements may be examined at the places specified in Item IV below. The self-regulatory organization has prepared summaries, set forth in Sections A, B, and C below, of the most significant aspects of such statements.

A. Self-Regulatory Organization's Statement of the Purpose of, and Statutory Basis for, the Proposed Rule Change

1. Purpose

The purpose of the proposed rule change is to amend CBOE's minor rule violation plan contained in Exchange Rule 17.50 (''minor rule plan'') to change provisions calculating time for aggregate fines for Blue Sheets violations from a calendar year basis to a rolling year basis. The rule change will implement the Commission's recommendation to amend the minor rule plan following a 1995 inspection of CBOE's regulatory and enforcement programs.

In an inspection report dated January 3, 1996 [4], the Commission's Office of Compliance Inspections and Examinations recommended amendment of CBOE's minor rule plan to consider previous Blue Sheets violations on a rolling basis in order to deter repeat, or recidivist, violators;

The current plan calculates aggregate fines on a calendar year basis for violations of position limits and bluesheet requests. Presently, if a member violates a position limit in March 1995, the CBOE would review whether the member had been sanctioned only in the prior two months and not the previous year. Reviewing sanctions levied on a rolling year basis would prove more beneficial.[5]

The filing will amend Rule 17.50(g)(3) relating to failures to respond in a timely manner to a request for Blue Sheets accordingly. The Exchange notes that no Blue Sheets violations have been processed as summary fines under the Exchange's minor rule plan in 1996.

2. Statutory Basis

By amending Exchange rules to implement the Commission's recommendations to more effectively deter repeat violations of the Blue Sheets provisions of CBOE's minor rule plan, the Exchange believes that the proposed rule change is consistent with Section 6 of the Securities Exchange Act of 1934 (''Act'') in general and with Section 6(b)(5) of the Act in particular in that it is designed to promote just and equitable principles of trade, and to protect investors and the public interest.

B. Self-Regulatory Organization's Statement on Burden on Competition

The Exchange believes that the proposed rule change will impose no burden on competition.

C. Self-Regulatory Organization's Statement on Comments on the Proposed Rule Change Received from Members, Participants or Others

No written comments were solicited or received with respect to the proposed rule change.

III. Commission's Findings and Order Granting Accelerated Approval of Proposed Rule Change

The Exchange has requested that the proposed rule change be given accelerated effectiveness pursuant to Section 19(b)(2) of the Act. The Commission finds that the proposed rule change is consistent with the requirements of the Act, and the rules and regulations thereunder applicable to a national securities exchange and, in particular, with the requirements of Section 6(b) of the Act. Specifically, the Commission believes that the rule change to calculate aggregate fines on a rolling year basis, implementing Commission recommendations, should deter more effectively repeat violations of CBOE's minor rule plan, and should promote just and equitable principles of trade, and the protection of investors and the public interest.

The Commission finds good cause for approving the proposed rule change prior to the thirtieth day after the date of publication of notice in the Federal Register. Immediate approval will allow the Exchange to adopt a Commission staff recommended change to its existing minor rule violation plan without further delay. Further, the Commission notes that the rule change merely conforms to the standard used by the New York Stock Exchange.[6] Accordingly, the Commission believes, consistent with Section 6(b)(5) of the Act, that good cause exists to approve the proposed rule change on an accelerated basis.

IV. Solicitation of Comments

Interested persons are invited to submit written data, views, and arguments concerning the foregoing. Persons making written submissions should file six copies thereof with the Secretary, Securities and Exchange Commission, 450 Fifth Street, N.W., Washington, D.C. 20549. Copies of the submission, all subsequent amendments, all written statements with respect to the proposed rule change that are filed with the Commission, and all written communications relating to the proposed rule change between the Commission and any person, other than those that may be withheld from the public in accordance with the provisions of 5 U.S.C. § 552, will be available for inspection and copying at the Commission's Public Reference Room. Copies of such filing will also be available for inspection and copying at the principal office of the Exchange. All submissions should refer to File No. SR–CBOE–96–69 and should be submitted by January 23, 1997.

It is therefore ordered, pursuant to Section 19(b)(2) of the Act,[7] that the proposed rule change (SR–CBOE–96–69) is hereby approved on an accelerated basis.

For the Commission, by the Division of Market Regulation, pursuant to delegated authority.[8]

Jonathan G. Katz,

Secretary.

[FR Doc. 96–33315 Filed 12–31–96; 8:45 am]

BILLING CODE 8010–01–M

[4] *See* Letter and attached Inspection Report from Lori A. Richards, Director, Office of Compliance Inspections and Examinations, Commission to Charles Henry, President, CBOE, dated January 3, 1996.

[5] *See* Inspection Report, p.9.

[6] *See* New York Stock Exchange Rule 476A, Supplementary Material (using ''a 'rolling' 12-month period'' to determine multiple minor violations).

[7] 15 U.S.C. 78s(b)(2).

[8] 17 CFR 200.30–3(a)(12).

[Release No. 34–38081; File No. SR–PSE–96–40]

Self-Regulatory Organizations; Order Approving Proposed Rule Change and Notice of Filing and Order Granting Accelerated Approval to Amendment No. 1 to Proposed Rule Change by the Pacific Stock Exchange, Inc., Relating to the Listing and Trading of Index Options on the Dow Jones & Co. Taiwan Index

December 23, 1996.

I. Introduction

On October 17, 1996, the Pacific Stock Exchange, Inc. (''PSE'' or ''Exchange'') submitted to the Securities and Exchange Commission (''Commission''), pursuant to Section 19(b)(1) of the Securities Exchange Act of 1934 (''Act'')[1] and Rule 19b–4 thereunder,[2] a proposed rule change to list and trade index options based on the Dow Jones & Co. (''Dow Jones & Co.'') Taiwan Index (''Index'').

The proposed rule change appeared in the Federal Register on October 25, 1996.[3] No comments were received on the proposed rule change. The Exchange subsequently filed Amendment No. 1 to the proposed rule change on December 17, 1996.[4] This order approves the PSE's proposal, as amended.

II. Description

The Exchange is proposing to list and trade cash-settled, European-style[5] stock index options on the Dow Jones & Co. Taiwan Index. The Index is comprised of 113 representative stocks traded on the Taiwan Stock Exchange (''TSE'').[6] According to the Exchange, the Index is representative of the Taiwan stock market as a whole, and therefore, is deemed a broad-based index.

A. Index Design

The Index was designed, and is maintained, by Dow Jones & Co. The 113 stocks comprising the Index were selected for their market weight, trading liquidity, and their representation of the business industries reflected on the TSE. The Exchange believes that these stocks reflect the industrial composition of the broader Taiwanese equity market. Specifically, stocks from nineteen different economic sectors of the Taiwan stock market were ranked by their market value and the largest stocks were selected from the sectors until approximately 80% of the market was represented by Index stocks.[7]

Only publicly traded and liquid common stocks are considered for inclusion in the Index. Stocks which are not traded frequently, do not have sufficiently high share turnover, or a sufficiently large dollar volume are excluded from the Index. Companies whose stocks are 75% owned by another company or state entity will be excluded, and companies controlled by a family or an individual are carefully reviewed before inclusion.

The Index is weighted by the market capitalization of the component stocks. As of August 30, 1996, the market capitalization of the Index was US$181 billion[8] (at the exchange rate of NT $27.5 per dollar), which represents approximately 80% of the capitalization of the TSE. The average market capitalization of these stocks was US$1.6 billion on the same date (at the same rate of exchange). The individual market capitalization of these stocks ranged from US$18.6 billion (Cathay Life Insurance) to US$150 million (Hong Ho Precision Textile Co.) on the same date. The largest stock accounted for 10.26% of the Index, while the smallest accounted for .08%. The top five stocks in the Index, by weight, accounted for approximately 31% of the Index.[9] The average daily trading volume of the component securities for the period April 1 through August 30, 1996, ranged from a high of 49,879,418 shares (China Steel) to a low of 457,091 shares (Hsing Ta Cement Co.), with an average daily trading volume for all components of the Index of approximately 7,698,763 shares. For the quarter ended September 30, 1996, the Index components, in the aggregate, had an average daily trading volume of US$1.1 billion.

B. Calculation and Maintenance of Index

The value of the Index is determined by multiplying the price of each stock by its number of shares included in the Index, adding those sums, and then dividing by a divisor which gives the Index value of 100 on its base date of December 31, 1991. The Index had a closing value of 160.33 on August 30, 1996. The Index will be maintained by Dow Jones & Co. and, in order to maintain continuity of the Index, the divisor of the Index will be adjusted to reflect certain events relating to the component stocks. These events include, but are not limited to, changes in the number of shares outstanding, spin-offs, certain rights insurances, and mergers and acquisitions.

The composition of the Index is reviewed every quarter using size, liquidity, and investibility screens. Dow Jones & Co. may make component changes at any time to ensure that the Index continues to represent the overall character of the Taiwanese equity market. To restrict turnover at quarterly revisions, however, an Index stock can be replaced by a new stock from the same economic sector only if the market value of the new stock exceeds its market value by a threshold amount. Index stocks may also be replaced when necessary between quarterly reviews following special corporate events such as delistings, mergers, or acquisitions. Adjustments may also become necessary following changes in government restrictions on the foreign ownership of stocks.

In addition, in the event that the Index does not comply with any of the following maintenance criteria, the Exchange will notify the Commission to determine the appropriate regulatory response: (a) the number of component stocks in the Index changes and there are more than 150 stocks or less than 75 stocks comprising the Index; (b) at the time of a quarterly review, a component's market capitalization is below $75 million; (c) the top weighted component stock accounts for more than 25% of the weight of the Index; or (d) the top three weighted stocks account for more than 45% of the weight of the Index.[10] The Commission's and the PSE's regulatory responses for failure to meet the above criteria could include, but are not limited to, the removal of the securities from the Index, prohibiting opening transactions, or discontinuing

[1] 15 U.S.C. 78s(b)(1) (1988).

[2] 17 CFR 240.19b–4.

[3] *See* Securities Exchange Act Release No. 37842 (October 18, 1996), 61 FR 55345 (October 25, 1996).

[4] *See* letter from Michael D. Pierson, Senior Attorney, Regulatory Policy, PSE, to Matthew Morris, Office of Market Supervision, Division of Market Regulation, Commission, dated December 17, 1996 (''Amendment No. 1''). In No. 1, the PSE amended its rule filing regarding its maintenance criteria and Index value dissemination procedures. *See infra* notes 10 and 12, and accompanying text.

[5] European-style options may only be exercised during a specified period before expiration.

[6] A list of Index components is available at the Commission and at the PSE.

[7] Due to foreign investment restrictions of Taiwanese stocks, Dow Jones & Co. only includes 20% of a component stocks' total shares outstanding in calculating the market capitalization. Accordingly, only 20% of the actual market value of the component stocks is represented by the Index.

[8] This figure includes all outstanding shares for each component stock. The Index itself is comprised of approximately 20% of this figure, of US$36.2 billion. *See supra* note 7.

[9] The five most heavily weighted stocks in the Index as of August 30, 1996 were: Cathay Life Insurance (10.26%); First Commercial Bank (5.98%); Hua Nan Bank (5.75%); Chang Hwa Bank (5.22%); and China Steel (3.88%).

[10] *See* Amendment No. 1.

the listing of new series of Index options.

C. Index Option Trading

The Exchange proposes to base trading in options on the Index on the full value of the Index as expressed in U.S. dollars. The Exchange also may provide for the listing of long-term index option series (''LEAPS'') on the Index. The Exchange will list expiration months for Index options and Index LEAPS in accordance with PSE Rule 7.8.

The trading hours for options on the Index will be from 6:30 a.m. Pacific time to 1:15 p.m. Pacific time.[11] With no overlap in trading hours between the PSE and the TSE, the Exchange is proposing to disseminate the Index value only at the beginning of each trading day.[12] Specifically, the PSE plans to disseminate the Index value via the Consolidated Tape Authority (''CTA'') Network B once a day at the opening of trading. The Index value will be subsequently re-disseminated throughout the trading day through data venders as well as through the Dow Jones Global Index web site.

In addition, the Exchange will be trading options on an Index value that is calculated in the ''local currency'' (*i.e.*, Taiwan dollars) and not converted into U.S. dollars. Although premiums will be in U.S. dollars, the strike prices will be based on the local currency Index level. It also should be noted that the futures and futures options that will be traded at the Chicago Mercantile Exchange (''CME'') will be based on the same underlying Index and the same Index value.

The Exchange is proposing to establish position limits for Index options equal to 50,000 contracts on the same side of the market, with no more than 30,000 contracts in the series with the nearest expiration date. According to the Exchange, these limits are roughly equivalent, in dollar terms, to the limits applicable to options on other indices. Furthermore, the hedge exemption rule applicable to broad-based index options will apply to Index options.[13]

The PSE also represents that it has the necessary systems capacity to support new series that would result from the introduction of the Index options.

D. Exercise and Settlement

The proposed options on the Index will expire on the Saturday following the third Friday of the expiration month, and trading in the expiring contract month on the PSE will normally cease on Friday at 1:15 p.m. Pacific time unless a holiday occurs. The exercise settlement value of Index options at expiration will be determined from closing prices established at the close of the regular Friday trading session in Taiwan. If a stock does not trade during this interval or if it fails to open for trading, the last available price of the stock will be used in the calculation of the Index. When expirations are removed in accordance with Exchange holidays, such as when the PSE is closed on the Friday before expiration, the last trading day for expiring options will be Thursday and the exercise settlement value of Index options at expiration will be determined at the close of the regular Thursday trading sessions in Taiwan even if the Taiwanese markets are open on Friday. If the Taiwanese markets are closed on the Friday before expiration but the PSE is open for trading, the last trading day for expiring options will similarly be Thursday, with the exercise settlement value being determined from Thursday closing prices on the TSE.

E. Surveillance

The Exchange will apply its existing index option surveillance procedures to Index options. In addition, the Exchange has entered into a surveillance sharing agreement with the TSE, which should, as discussed below, enable the Exchange to obtain information concerning the trading of the component stocks of the Index.

III. Findings and Conclusions

The Commission finds that the proposed rule change is consistent with the requirements of the Act and the rules and regulations thereunder applicable to a national securities exchange, and, in particular, with the requirements of Section 6(b).[14] Specifically, the Commission finds that the trading of index options based on the Dow Jones & Co. Taiwan Index, including long-term index options, will serve to protect investors, promote the public interest, and will help to remove impediments to a free and open market by providing investors with a means to hedge exposure to the market risk associated with the Taiwanese equity market and to provide a risk management instrument for positions in the Taiwanese securities market.[15]

Nevertheless, the trading of options on the Index raises several issues related to the design and structure of the Index, customer protection, and surveillance. The Commission believes, however, for the reasons discussed below, that the PSE has adequately addressed these issues.

A. Index Design and Structure

The Commission finds that it is appropriate and consistent with the Act to apply the Exchange rules applicable to broad-based index options to the Index options. First, the Index consists of 113 of the most actively traded stocks on the TSE. Second, stocks in the Index are among the most highly capitalized stocks on the TSE. For example, on August 30, 1996, the market capitalization of the Index was US$181 billion (at the exchange rate of NT $27.5 per dollar), which represents approximately 80% of the capitalization of the TSE. In addition, the market capitalization of the individual stocks in the Index ranged from a high of US$18.6 billion (Cathay Life Insurance) to a low of US$150 million (Hong Ho Precision Textile Co.), with an average market capitalization of US$1.6 billion. Third, the Index includes stocks of companies from nineteen separate industries. Fourth, PSE maintenance criteria require that no single Index component shall comprise more than 25% of the Index's total value, and that the percentage weighting of the three largest issues in the Index shall not exceed 45% of the Index's value. This will help to ensure that a single stock or small group of stocks does not dominate the Index.[16] Fifth, Dow Jones & Co. has adopted listing and maintenance criteria to ensure that the Index maintains its broad representative sample of stocks as well as a variety of industries and economic sectors.[17] In addition, the

[11] Regular trading hours in Taiwan are Monday to Friday 0900–1200, and Saturday from 0900–1100.

[12] According to the PSE, the Consolidated Tape Authority (''CTA'') has asked the options exchanges to evaluate the need to disseminate index values based on foreign indices every fifteen seconds when the index value does not change during U.S. trading hours. The CTA is concerned that disseminating the same index value every fifteen seconds results in unnecessary data traffic. By disseminating the Index value only once a day, the Exchange believes that it is complying with the CTA's request. *See* Amendment No. 1.

[13] *See* Commentary .02 to PSE Rule 7.6.

[14] 15 U.S.C. 78f(b) (1988).

[15] Pursuant to Section 6(b)(5) of the Act, the Commission must predicate approval of any new securities product upon a finding that the introduction of such product is in the public interest. Such a finding would be difficult with respect to a product that served no hedging or other economic function, because any benefits that might be derived by market participants likely would be outweighed by the potential for manipulation, diminished public confidence in the integrity of the markets, and other valid regulatory concerns.

[16] As noted above, as of August 30, 1996, the top five stocks in the Index, by weight, accounted for approximately 31% of the Index, and no single stock accounted for more than 10.26% of the Index. *See supra* note 9 and accompanying text.

[17] For example, the Exchange's maintenance criteria require that at the time of a quarterly review, a component's market capitalization be

Continued

maintenance criteria will ensure that the Index continues to be comprised of component stocks that are among the most highly capitalized and actively traded stocks on the TSE. Accordingly, the Commission believes it is appropriate to classify the Index as broad-based.

For many of the same reasons, the Commission believes that the general broad diversification of the Index component stocks, as well as their high capitalizations and trading activity, lessen the potential for manipulation of the index. First, as noted above, the Index represents a broad cross-section of highly-capitalized Taiwanese stocks, with no single industry group or stock dominating the Index. Second, the stocks that comprise the Index are relatively actively traded. Third, the Commission believes that the Index selection and maintenance criteria will serve to ensure that the Index continues to represent stocks with the highest capitalizations and trading volumes on the TSE. In addition, the Exchange has proposed position and exercise limits for the Index options that are consistent with other broad-based index options. Finally, as discussed in more detail below, the Commission believes that adequate surveillance mechanisms exist between the PSE and the underlying security market to detect and deter potential market manipulation and other trading abuses.

B. Customer Protection

The Commission believes that a regulatory system designed to protect public customers must be in place before the trading of sophisticated financial instruments, such as the Dow Jones & Co. Taiwan Index options and Index LEAPS, can commence on a national securities exchange. The Commission notes that the trading of standardized exchange-traded options occurs in an environment that is designed to ensure, among other things, that: (1) the special risks of options are disclosed to public customers; (2) only investors capable of evaluating and bearing the risks of options trading are engaged in such trading; and (3) special compliance procedures are applicable to options accounts. Accordingly, because the Index options and Index LEAPS will be subject to the same regulatory regime as the other standardized options currently traded on the PSE, the Commission believes that adequate safeguards are in place to ensure the protection of investors in Dow Jones & Co. Taiwan Index options and Index LEAPS.

C. Surveillance

In evaluating a proposal to trade a new derivative instrument, the Commission, consistent with the protection of investors, considers the degree to which the derivative market can conduct adequate surveillance of trading in the instrument. The ability of the options market to obtain information necessary to detect and deter market manipulation and other trading abuses is a critical factor in this evaluation. It is for this reason that it is important that the Commission determine that there is an adequate mechanism in place to provide for the exchange of information between the market trading the derivative product and the market on which the securities underlying the derivative product are traded. Such mechanisms enable officials to surveil trading in both the derivative product and the underlying securities.[18] For foreign stock index derivative products, such mechanisms are especially important for the relevant foreign and domestic exchanges to facilitate the collection of necessary regulatory, surveillance, and other information.

The Commission notes that the PSE and the TSE have entered into a Memorandum of Understanding (''MOU'') which appears to enable the Exchange to obtain necessary surveillance information concerning the trading of the component stocks of the Index, including the identity of persons who execute transactions on either the TSE or the PSE.[19] The Commission recognizes, however, that there are conditions that affect the flow of information under the MOU between the two exchanges. While the TSE has represented that there are no TSE rules or Taiwanese laws that might act to restrict the flow of market surveillance information, any request that involves information on an investor's identity or any information that is confidential or classified must be approved by the Taiwan Securities and Exchange Commission (''TSEC''). The TSEC will review the request on a case-by-case basis in deciding whether to permit the TSE to provide the information to the PSE. As such, pertinent transaction, clearing, or customer identity information that may be necessary for the PSE to review during an investigation might need approval by the TSEC before it could be relayed to the PSE.

In most situations, in the absence of a fully effective surveillance sharing agreement between exchanges, the Commission finds it difficult to conclude that a derivative product, such as the Dow Jones & Co. Taiwan Index options, is not susceptible to manipulation. Other factors, however, mitigate such a conclusion in this instance and support approval of the PSE's proposal. First, while the size of the underlying market is not necessarily determinative of whether a particular derivative product is readily susceptible to manipulation, the size of the market underlying the Dow Jones & Co. Taiwan Index makes it less likely that the proposed Index options are readily susceptible to manipulation.

Second, the PSE and the TSE, as discussed above, have signalled their intentions to prevent cross-border fraud and manipulation by entering into a MOU.

Third, although it appears that the TSEC has the ability to limit or condition the information to be provided by the TSE to the PSE, the TSEC has stated to the Commission that it would share surveillance information with the Commission on a case-by-case basis.[20] Moreover, in connection with the Commission's review of a proposal by the CME to trade futures on the Dow Jones & Co. Taiwan Index, the CME provided an opinion of counsel that indicates that the TSEC has the authority to obtain market oversight information that the Commission might request.[21] Consequently, it appears as though the TSEC can obtain the

above $75 million, and that the number of component stocks in the Index not be more than 150 or less than 75 stocks. In the event that the Index does not comply with any of the Exchange's maintenance criteria, the PSE will notify the Commission to determine that appropriate regulatory responses. Such responses could include, but are not limited to, the removal of the securities from the Index, prohibiting opening transaction, or discontinuing the listing of new series of Index options.

[18] The Commission believes that a comprehensive surveillance sharing agreement should provide the parties with the ability to obtain information necessary to detect and deter market manipulation and other trading abuses. Consequently, the Commission generally insists that such agreements require that the parties provide each other, upon request, with information about market trading activity, clearing activity, and the identity of the purchasers and sellers of securities underlying the derivative product. *See, e.g.*, Securities Exchange Act Release No. 31529 (November 27, 1992), 57 FR 574248 (December 3, 1992) (File No. Amex–91–26) (order approving proposed rule changes relating to the listing and trading of options on American Depositary Receipts and preferred stock).

[19] *See* Memorandum of Understanding Concerning the Provision of Information for the Purpose of Regulation and Enforcement between the Pacific Stock Exchange and the Taiwan Stock Exchange, dated October 22, 1993.

[20] Such information would include transaction, clearing, and customer identity information necessary to conduct an investigation.

[21] *See* letter from Carl A. Royal, Senior Vice President, Chicago Mercantile Exchange, to Jane C. Kang, Special Counsel, CFTC, and Howard Kramer, Associate Director, Division of Market Regulation, Commission, dated September 12, 1996.

necessary information and is willing to provide it to the Commission. The Commission believes that this, along with the PSE's agreement with the TSE, should help to detect as well as to deter potential manipulation.

While the situation described above is not ideal, the Commission believes that it is adequate in light of the circumstances and considering the large capitalizations, substantial trading volume, wide diversity of the component stocks in the Dow Jones & Co. Taiwan Index, and the size of the market underlying the Index.[22]

The Commission finds good cause to approve Amendment No. 1 to the proposed rule filing prior to the thirtieth day after the date of publication of notice of filing thereof in the Federal Register. Amendment No. 1 to the PSE's proposal describes details of certain Index maintenance procedures. In this regard, the Commission believes that the Exchange's review of the Index's component securities for liquidity, capitalization, and concentration levels will help to ensure that the Index maintains its intended market character as well as remains an appropriate trading vehicle for public customers. In addition, Amendment No. 1 changes the Exchange's dissemination procedures. Rather than calculating and disseminating the Index value every fifteen seconds throughout the trading day, the Exchange will disseminate the Index value only at the beginning of each trading day. The Commission believes that in light of the PSE's assurances that the Index value will be widely available to investors throughout the trading day through data vendors as well as through the Dow Jones Global Index web site, and because stock exchange trading in Taiwan and U.S. markets do not overlap, approval of the amendment is appropriate. The changes proposed by Amendment No. 1 are minor, technical, or clarify and, for the reasons noted above, do not raise any new regulatory issues. The Commission also notes that no comments were received on the original PSE proposal, which was subject to the full 21-day notice and comment period. Accordingly, the Commission believes that it is consistent with Section 6(b)(5) of the Act to approve Amendment No. 1 to the proposed rule change on an accelerated basis.

Interested persons are invited to submit written data, views, and arguments concerning Amendment No. 1 to the rule proposal. Persons making written submissions should file six copies thereof with the Secretary, Securities and Exchange Commission, 450 Fifth Street, N.W., Washington, D.C. 20549. Copies of the submission, all subsequent amendments, all written statements with respect to the proposed rule change that are filed with the Commission, and all written communications relating to the proposed rule change between the Commission and any person, other than those that may be withheld from the public in accordance with the provisions of 5 U.S.C. 552, will be available for inspection and copying at the Commission's Public Reference Section, 450 Fifth Street, N.W., Washington, D.C. 20549. Copies of such filing also will be available for inspection and copying at the principal office of the PSE. All submissions should refer to File No. SR–PSE–96–40 and should be submitted by January 23, 1997.

IV. Conclusion

For the foregoing reasons, the Commission finds that the PSE's proposal to list and trade index options based on the Dow Jones & Co. Taiwan Index is consistent with the requirements of the Act and the rules and regulations thereunder.

It is therefore ordered, pursuant to Section 19(b)(2) of the Act,[23] that the proposed rule change (SR–PSE–96–40), as amended, is approved.

For the Commission, by the Division of Market Regulation, pursuant to delegated authority.[24]

Jonathan G. Katz,

Secretary.

[FR Doc. 96–33314 Filed 12–31–96; 8:45 am]

BILLING CODE 8010–01–M

[22] The Commission has similarly explored alternatives in other instances when the relevant foreign exchange was unwilling or unable to enter into a comprehensive surveillance sharing agreement. *See, e.q.,* Securities Exchange Act Release No. 36070 (August 9, 1995), 60 FR 42205 (August 15, 1995) (order approving proposed rule change relating to the listing and trading of warrants on the Deutscher Aktienindex).

[23] 15 U.S.C. 78s(b)(2) (1988).

[24] 17 CFR 200.30–3(a)(12).

DEPARTMENT OF STATE

[Public Notice No. 2493]

Shipping Coordinating Committee Subcommittee on Safety of Life at Sea Working Group on Fire Protection; Meeting

The U.S. Safety of Life at Sea (SOLAS) Working Group on Fire Protection will conduct an open meeting on January 22, 1997, at 9:30 a.m., in Room 4315 at U.S. Coast Guard Headquarters, 2100 2nd Street, SW, Washington, DC 20593. The purpose of the meeting will be to discuss the outcome of the Forty-first Session of the International Maritime Organization's Subcommittee on Fire Protection, held on September 30, 1996. In addition, preparations for the next session will also be discussed at the meeting.

The meeting will focus on proposed amendments to the 1974 SOLAS Convention for the fire safety of commercial vessels. Specific discussion areas include: the new mandatory Fire Test Procedures Code, proposed restructuring of Chapter II–2, halon fire extinguishing systems, emergency escape breathing devices, fire retardant materials for fishing vessel lifeboats, criteria for maximum fire loads, fire safety measures for deep fat cooking equipment, interpretations to SOLAS 74, role of the human element in maritime casualties, safety of passenger submersible craft, recognition of test laboratories, fixed fire detection and alarm systems for new and existing cargo ships, and shipboard safety emergency plans.

Although the meeting will focus primarily on the outcome of the previous session, preparations and plans for the next will also be discussed. This offers the opportunity for members of the public to be involved early in the standards development process. Members of the public wishing to make a statement on new issues or proposals at the meeting are requested to submit a brief summary to the U.S. Coast Guard five days prior to the meeting.

Interested members of the public are encouraged to attend. For further information regarding the meeting of the SOLAS Working Group on Fire Protection contact Mr. Jack Booth at (202) 267–2997.

Dated: December 18, 1996.

Russell A. La Mantia,

Chairman, Shipping Coordinating Committee.

[FR Doc. 96–33313 Filed 12–31–96; 8:45 am]

BILLING CODE 4710–07–M

DEPARTMENT OF TRANSPORTATION

Office of the Secretary

White House Commission on Aviation Safety and Security; Open Meeting

AGENCY: Office of the Secretary (OST), DOT.

ACTION: Notice of meeting.

SUMMARY: The White House Commission on Aviation Safety and Security will hold a meeting to discuss

aviation safety and security issues. The meeting is open to the public.

DATES: The meeting will be held on Thursday, January 16, 1997, from 2:00 p.m. to 5:00 p.m.

ADDRESSES: The meeting will take place in the Commerce Department Auditorium, 14th Street, between Constitution and Pennsylvania Avenues, NW, Washington, DC.

FOR FURTHER INFORMATION CONTACT: Richard K. Pemberton, Administrative Officer, Room 6210, GSA Headquarters, 18th & F Streets, NW, Washington, DC 20405; telephone 202.501.3863; telecopier 202.501.6160.

SUPPLEMENTARY INFORMATION: Pursuant to the Federal Advisory Committee Act (5 U.S.C. Appendix), DOT gives notice of a meeting of the White House Commission on Aviation Safety and Security (''Commission''). The Commission was established by the President to develop advice and recommendations on ways to improve the level of civil aviation safety and security, both domestically and internationally. The principal purpose of the meeting on January 16 is to obtain information concerning aviation safety and financing.

Limited seating for the public portion of the meeting is available on a first-come, first-served basis. The public may submit written comments to the Commission at any time; comments should be sent to Mr. Pemberton at the address and telecopier number shown above.

Issued in Washington, DC, on December 26, 1996.

Rosalind A. Knapp,

Acting General Counsel, Department of Transportation.

[FR Doc. 96–33338 Filed 12–31–96; 8:45 am]

BILLING CODE 4910–62–P

Coast Guard

[CGD08–97–061]

Houston/Galveston Navigation Safety Advisory Committee Meeting

AGENCY: Coast Guard, DOT.

ACTION: Notice of full committee meeting.

SUMMARY: The Houston/Galveston Navigation Safety Advisory Committee (HOGANSAC) will meet to discuss waterway improvements, aids to navigation, current meters, and various other navigation safety matters affecting the Houston/Galveston area. All meetings will be open to the public.

DATES: The meeting at HOGANSAC will be held on Thursday, January 30, 1997 from 9:30 a.m. to approximately 1 p.m. Member of the public may present written or oral settlements at the meeting.

ADDRESSES: The HOGANSAC meeting will be held in the conference room of the House Pilots Office, 8150 South Loop East, Houston, Texas.

FOR FURTHER INFORMATION CONTACT: Captain Kevin Eldridge, Executive Director of HOGANSAC, telephone (713) 671–5101, or Commander Paula Carroll, Executive Secretary of HOGANSAC, telephone (713) 671–5164.

SUPPLEMENTARY INFORMATION: Notice of this meeting is given pursuant to the Federal Advisory Committee Act, 5 U.S.C. App. 2.

Agenda of the Meeting

Houston/Galveston Navigation Safety Advisory Committee (HOGANSAC). The tentative agenda includes the following:

(1) Opening remarks by the sponsor (Rear Admiral Josiah), Executive Director (Captain Eldridge) and chairman (Tim Leitzell).

(2) Approval of the October 3, 1996 minutes.

(3) Report from the Waterways Subcommittee.

(4) Report from the Navigation Subcommittee.

(5) ''State of the Waterway'' report by Vessel Traffic Service Houston/Galveston.

(6) Status reports on Committee membership, HSC 2000 Report, ''Mobility'' initiative and Houston Ship Channel dredging project.

Procedural

All meetings are open to the public. Members of the public may make oral presentations during the meetings.

Information on Services for the Handicapped

For information on facilities or services for the handicapped or to request special assistance at the meetings, contact the Executive Director as soon as possible.

Dated: December 19, 1996.

T. W. Josiah,

Rear Admiral, U.S. Coast Guard, Commander, Eighth Coast Guard District.

[FR Doc. 96–33371 Filed 12–31–96; 8:45 am]

BILLING CODE 4910–14–M

Federal Aviation Administration

Advisory Circulars: Small Airplanes Airworthiness Standards

AGENCY: Federal Aviation Administraion (FAA), DOT.

ACTION: Publication of advisory Circulars; Part 23 Airplanes.

SUMMARY: The purpose of this notice is to advise the public of advisory circulars (AC's) issued by the Small Airplane Directorate since January 1996. The AC's listed below relate to part 23 of the Federal Aviation Regulations (FAR) and/or Part 3 of the Civil Air Regulations (CAR). They were issued to inform the aviation public of acceptable means of showing compliance with the Airworthiness Standards in the FAR and/or CAR, but the material is neither mandatory nor regulatory in nature.

FOR FURTHER INFORMATION CONTACT: Ms. Terre Flynn, Standards Staff (ACE–11), Federal Aviation Administration, Small Airplane Directorate, Aircraft Certification Service, 601 East 12th Street, Kansas City, Missouri 64106; commercial telephone number (816) 426–6941.

SUPPLEMENTARY INFORMATION:

Background

These AC's were developed to update existing policy information for small airplane certification programs.

Comments

Interested parties were given the opportunity to review and comment on each AC during the development phase. At that time, notices were published in the Federal Register to announce the availability of, and request written comments, to each proposed AC. Each comment was reviewed and resolved. Appropriate comments were incorporated in the AC.

Distribution

The published AC's are available upon request through the U.S. Department of Transportation, Subsequent Distribution Office, SVC–121.23, Ardmore East Business Center, 3341 Q 75th Avenue, Landover, Maryland 20785.

Advisory Circulars Published

AC No.	Date	Title
23.1521–2, Change 1	4/24/96	Type Certification of Oxygenates and Oxygenated Gasoline Fuels in Part 23 Airplanes with Reciprocating Engines.

AC No.	Date	Title
23.733–1	10/10/96	Tundra Tires.

In addition to the AC's listed above, Powered Parachute Design Standards for Acceptance Under Primary Category was issued 5/8/96. A copy of this publication may be obtained by contacting the person named above under **FOR FURTHER INFORMATION CONTACT.**

Issued in Kansas City, Missouri, on December 24, 1996.

Michael Gallagher,

Manager, Small Airplane Directorate Aircraft Certification Office.

[FR Doc. 96–33376 Filed 12–31–96; 8:45 am]

BILLING CODE 4810–13–M

[Summary Notice No. PE–96–62]

Petitions for Waiver; Summary of Petitions Received; Dispositions of Petitions Issued

AGENCY: Federal Aviation Administration (FAA), DOT.

ACTION: Notice of petitions for waivers received and of dispositions of prior petitions.

SUMMARY: This notice contains the summary of a petition requesting a waiver from the interim compliance date required of 14 CFR part 91, § 91.867. Requesting a waiver is allowed through § 91.871. The purpose of this notice is to improve the public's awareness of, and participation in, this aspect of FAA's regulatory activities. Neither publication of this notice nor the inclusion or omission of information in the summary is intended to affect the legal status of any petition or its final disposition.

DATES: Comments on petitions received must identify the petition docket number involved and must be received on or before January 15, 1997.

ADDRESSES: Send comments on any petition in triplicate to: Federal Aviation Administration, Office of the Chief Counsel, Attn: Rule Docket (AGC–200), Petition Docket No. 28771, 800 Independence Avenue, SW., Washington, D.C. 20591.

Comments may also be sent electronically to the following internet address: nprmcmts@faa.dot.gov.

The petition, any comments received, and a copy of any final disposition are filed in the assigned regulatory docket and are available for examination in the Rules Docket (AGC–200), Room 915G, FAA Headquarters Building (FOB 10A), 800 Independence Avenue, SW., Washington, D.C. 20591; telephone (202) 267–3132.

FOR FURTHER INFORMATION CONTACT: Angela Anderson (202) 267–9681 Office of Rulemaking (ARM–1), Federal Aviation Administration, 800 Independence Avenue, SW., Washington, DC 20591.

Issued in Washington, DC, on December 23, 1996.

Donald P. Byrne,

Assistant Chief Counsel for Regulations.

Petitions for Waiver

Docket No.: 28771.

Petitioner: Transcontinental Airlines, Inc.

Sections of the FAR Affected: 14 CFR 91867.

Description of Relief Sought: To allow Transcontinental Airlines, Inc. to operate for 31 days after December 31, 1996, without the required number of Stage 3 aircraft in its fleet.

[FR Doc. 96–33372 Filed 12–31–96; 8:45 am]

BILLING CODE 4910–13–M

RTCA, Inc.; Special Committee 165; Minimum Operational Performance Standards for Aeronautical Mobile Satellite Services

Pursuant to section 10(a)(2) of the Federal Advisory Committee Act (P.L. 92–463, 5 U.S.C., Appendix 2), notice is hereby given for Special Committee (SC) 165 meeting to be held January 16–17, 1997, starting at 9:30 a.m. The meeting will be held at RTCA, 1140 Connecticut Avenue, N.W., Suite 1020, Washington, DC, 20036.

The plenary agenda will be as follows:

(1) Welcome and Introductions;

(2) Approval of the Summary of the Previous Meeting;

(3) Chairman's Remarks;

(4) Overview of New Developments Relevant to AMSS and SC 165: a. Required Communications Performance (SC 169/WG 2); b. AMCP WG A on AMSS; c. Industry, Users, Government;

(5) Review of Working Group Activities: a. WG 1 (AMSS Avionics Equipment MOPS); b. WG 3 (System/Service Performance Criteria and Next-Generation Satcom); c. WG 5 (AMS(R)S Satcom Voice);

(6) Other Business;

(7) Date and Place on Next Meeting.

Attendance is open to the interested public but limited to space availability. With the approval of the chairman, members of the public may present oral statements at the meeting. Persons wishing to present statements or obtain information should contact the RTCA Secretariat, 1140 Connecticut Avenue, N.W., Suite 1020, Washington, D.C. 20036; (202) 833–9339 (phone) or (202) 833–9434 (fax). Members of the public may present a written statement to the committee at any time.

Issued in Washington, DC, on December 20, 1996.

Janice L. Peters,

Designated Official.

[FR Doc. 96–33374 Filed 12–31–96; 8:45 am]

BILLING CODE 4810–13–M

RTCA, Inc. Special Committee 185; Aeronautical Spectrum Planning Issues

Pursuant to section 10(a)(2) of the Federal Advisory Committee Act (P.L. 92–463, 5 U.S.C., Appendix 2), notice is hereby given for a Special Committee 185 meeting to be held on January 14–16, 1997, starting at 9:00 a.m. The meeting will be held at RTCA, Inc., 1140 Connecticut Avenue, N.W., Suite 1020, Washington, DC 20036.

The agenda will be as follows: (1) Administrative Remarks; (2) General Introductions; (3) Review and Approval of the Agenda; (4) Review and Approval of the Summary of the Previous Meeting; (5) Review Ballot Comments on Special Committee 185 Final Report; (6) Other Business; (7) Adjournment of Special Committee 185.

Attendance is open to the interested public but limited to space availability. With the approval of the chairman, members of the public may present oral statements at the meeting. Persons wishing to present statements or obtain information should contact the RTCA Secretariat, 1140 Connecticut Avenue, N.W., Suite 1020, Washington, DC 20036; (202) 833–9339 (phone) or (202) 833–9434 (fax). Members of the public may present a written statement to the committee at any time.

Issued in Washington, DC, on December 20, 1996.

Janice L. Peters,

Designated Official.

[FR Doc. 96–33375 Filed 12–31–96; 8:45 am]

BILLING CODE 4810–13–M

Notice of Intent To Rule on Application To Impose and Use the Revenue From a Passenger Facility Charge (PFC) at Manchester Airport

AGENCY: Federal Aviation Administration (FAA), DOT.

ACTION: Notice of intent to rule on application.

SUMMARY: The FAA proposes to rule and invites public comment on the application to impose and use the revenue from a Passenger Facility Charge at Manchester Airport under the provisions of the Aviation Safety and Capacity Expansion Act of 1990 (Title IX of the Omnibus Budget Reconciliation Act of 1990) (Public Law 101–508) and part 158 of the Federal Aviation Regulations (14 CFR part 158).

DATES: Comments must be received on or before February 3, 1997.

ADDRESSES: Comments on this application may be mailed or delivered in triplicate to the FAA at the following address: Federal Aviation Administration, Airport Division, 12 New England Executive Park, Burlington, Massachusetts 01803.

In addition, one copy of any comments submitted to the FAA must be mailed or delivered to Mr. Alfred Testa, Jr., Airport Director for Manchester Airport at the following address: Manchester Airport, One Airport Road, Suite 300, Manchester, New Hampshire, 03103.

Air carriers and foreign air carriers may submit copies of written comments previously provided to the City of Manchester under section 158.23 of Part 158 of the Federal Aviation Regulations.

FOR FURTHER INFORMATION CONTACT: Priscilla A. Scott, Airports Program Specialist, Federal Aviation Administration, Airports Division, 12 New England Executive Park, Burlington, Massachusetts 01803, (617) 238–7614. The application may be reviewed in person at 16 New England Executive Park, Burlington, Massachusetts.

SUPPLEMENTARY INFORMATION: The FAA proposes to rule and invites public comment on the application to impose and use the revenue from a Passenger Facility Charge (PFC) at Manchester Airport under the provisions of the Aviation Safety and Capacity Expansion Act of 1990 (Title IX of the Omnibus Budget Reconciliation Act of 1990) (Public Law 101–508) and part 158 of the Federal Aviation Regulations (14 CFR part 158).

On December 12, 1996, the FAA determined that the application to impose and use the revenue from a PFC submitted by the City of Manchester was substantially complete within the requirements of section 158.25 of part 158 of the Federal Aviation Regulations. The FAA will approve or disapprove the application, in whole or in part, no later than March 18, 1997.

The following is a brief overview of the impose and use application.

PFC Project: # 97–04–C–00–MHT.

Level of the proposed PFC: $3.00.

Proposed Charge effective date: September 1, 1997.

Estimated charge expiration date: February 1, 1998.

Estimated total net PFC revenue: $527,500.00.

Brief description of project: Acquire Snow Removal Equipment.

Class or classes of air carriers which the public agency has requested not be required to collect PFCs: On demand Air Taxi/Commercial Operators (ATCO).

Any person may inspect the application in person at the FAA office listed above under **FOR FURTHER INFORMATION CONTACT.**

In addition, any person may, upon request, inspect the application, notice and other documents germane to the application in persons at the Manchester Airport, One Airport Road, Suite 300, Manchester, New Hampshire 03103.

Issued in Burlington, Massachusetts on December 17, 1996.

Vincent A. Scarano,

Manager, Airports Division, New England Region.

[FR Doc. 96–33373 Filed 12–31–96; 8:45 am]

BILLING CODE 4910–13–M

Notice of Intent To Rule on Application (#97–03–C–00–GEG) To Impose and Use the Revenue From a Passenger Facility Charge (PFC) at Spokane International Airport, Submitted by the Spokane Airports, Spokane, WA

AGENCY: Federal Aviation Administration (FAA), DOT.

ACTION: Notice of intent to rule on application.

SUMMARY: The FAA proposes to rule and invites public comment on the application to impose and use PFC revenue at Spokane International Airport under the provisions of 49 U.S.C. 40117 and Part 158 of the Federal Aviation Regulations (14 CFR 158).

DATES: Comments must be received on or before February 3, 1997.

ADDRESSES: Comments on this application may be mailed or delivered in triplicate to the FAA at the following address: J. Wade Bryant, Manager; Seattle Airports District Office, SEA–ADO; Federal Aviation Administration; 1601 Lind Avenue SW; Suite 250; Renton, WA 98055–4056.

In addition, one copy of any comments submitted to the FAA must be mailed or delivered to Mr. John G. Morrison, CEO/Executive Director, at the following address: Spokane Airports, P.O. Box 19186, Spokane, WA 99219–9186.

Air Carriers and foreign air carriers may submit copies of written comments previously provided to Spokane International Airport, under section 158.23 of Part 158.

FOR FURTHER INFORMATION CONTACT: Ms. Mary Vargas, (206) 227–2660; Seattle Airports District Office, SEA–ADO; Federal Aviation Administration; 1601 Lind Avenue SW, Suite 250; Renton, WA 98055–4056. The application may be reviewed in person at this same location.

SUPPLEMENTARY INFORMATION: The FAA proposes to rule and invites public comment on the application (#97–03–C–00–GEG) to impose and use PFC revenue at Spokane International Airport, under the provisions of 49 U.S.C. 40117 and Part 158 of the Federal Aviation Regulations (14 CFR Part 158).

On December 24, 1996, the FAA determined that the application to impose and use the revenue from a PFC submitted by the Spokane International Airport, Spokane, Washington, was substantially complete within the requirements of section 158.25 of Part 158. The FAA will approve or disapprove the application, in whole or in part, no later than March 25, 1997.

The following is a brief overview of the application.

Level of the proposed PFC: $3.00.

Proposed charge effective date: June 1, 1997.

Proposed charge expiration date: July 1, 2002.

Total requested for use approval: $17,606,000.00.

Brief description of proposed project: Master plan update; Airport terminal signage; Taxiway D and H improvements; Taxiway J improvements; Multiple use apron (Apron G) improvements; Multi use apron improvements; Regional terminal concourse expansion; and Terminal ticketing/baggage expansion.

Class or classes of air carriers which the public agency has requested not be required to collect PFC's: None.

Any person may inspect the application in person at the FAA office listed above under **FOR FURTHER INFORMATION CONTACT** and at the FAA Regional Airports Office located at:

Federal Aviation Administration, Northwest Mountain Region, Airports Division, ANM–600, 1601 Lind Avenue, S.W., Suite 540, Renton, WA 98055–4056.

In addition, any person may, upon request, inspect the application, notice and other documents germane to the application in person at the Spokane International Airport.

Issued in Renton, Washington, on December 24, 1996.

David A. Field,

Manager, Planning, Programming and Capacity Branch, Northwest Mountain Region.

[FR Doc. 96–33377 Filed 12–31–96; 8:45 am]

BILLING CODE 4910–13–M

Federal Railroad Administration

[FRA Waiver Petition Docket No. PB–95–4]

Petition for Waiver of Compliance

In accordance with Part 211 of Title 49 Code of Federal Regulations (CFR), notice is hereby given that the Federal Railroad Administration (FRA) received a request for a waiver of compliance with certain requirements of its safety standards. The individual petition is described below, including the party seeking relief, the regulatory provisions involved, the nature of the relief being requested, and the petitioner's arguments in favor of relief.

Northeast Illinois Railroad Corporation

Northeast Illinois Railroad Corporation (Metra) seeks a permanent waiver of compliance from certain provisions of 49 CFR Part 232, Section 17, on passenger cars equipped with 26–C brake equipment by extending the clean, oil, test and stencil (COT&S) period from 36 to 48 months, and on passenger cars that are equipped with PS–68 brake systems by eliminating the required 12 cycle of single car testing. According to Metra's waiver request, their entire car fleet is equipped with the 26–C brake valve and is captive to the Chicago metropolitan area. Each Metra car is placed in a yard at least once each week. Their passenger locomotive fleet is equipped with Graham-White Air Dryers which provide a source of clean, dry air to the brake system. When on repair tracks or upon completion of COT&S, Metra cars are tested under Metra's Code of Tests for Passenger Cars. The Metra's Code of Tests for Passenger Cars is based upon Association of American Railroad's (AAR) Standard S–044 with the following enhancements:

- Main reservoir pipe and reservoir leakage test (Part 2.2);
- Test for auxiliary brake pipe reduction devices (Part 2.5);
- Lift interlock pressure setting test (required feature covered by the American Disabilities Act) (Part 2.10);
- Test for cars equipped with the 26–C service portion valves and ABDXL emergency portion valves (Part 2.16); and
- Test for the car handbrake (Part 2.17).

The passenger cars operated on the Burlington Northern are equipped with a PS–68 brake system, which has 26–C brake equipment as its foundation. The PS–68 brake system is governed by a 48 month COT&S cycle, per AAR Standard S–045. In date, testing has been performed as the cars are repaired in maintenance shops. According to Metra, the car is dependable and safe, and their experience with this equipment does not support a benefit for the additional 12 month cycle of single car testing.

Interested parties are invited to participate in these proceedings by submitting written views, data, or comments. FRA does not anticipate scheduling a public hearing in connection with these proceedings since the facts do not appear to warrant a hearing. If any interested party desires an opportunity for oral comment, they should notify FRA, in writing, before the end of the comment period and specify the basis for their request.

All communications concerning these proceedings should identify the appropriate docket number (e.g., Waiver Petition Docket Number PB–95–4) and must be submitted in triplicate to the Docket Clerk, Office of Chief Counsel, FRA, Nassif Building, 400 Seventh Street S.W., Washington, D.C. 20590. Communications received within 30 days of the date of this notice will be considered by FRA before final action is taken. Comments received after that date will be considered as far as practicable. All written communications concerning these proceedings are available for examination during regular business hours (9:00 a.m.–5:00 p.m.) at FRA's temporary docket room located at 1120 Vermont Avenue, N.W., Room 7051, Washington, D.C. 20005.

Issued in Washington, D.C. on December 20, 1996.

Phil Olekszyk,

Deputy Associate Administrator for Safety Compliance and Program Implementation.

[FR Doc. 96–33303 Filed 12–31–96; 8:45 am]

BILLING CODE 4910–06–P

[FRA Waiver Petition Docket No. PB–96–2]

Petition for Waiver of Compliance

In accordance with Part 211 of Title 49 Code of Federal Regulations (CFR), notice is hereby given that the Federal Railroad Administration (FRA) received a request for a waiver of compliance with certain requirements of its safety standards. The individual petition is described below, including the party seeking relief, the regulatory provisions involved, the nature of the relief being requested, and the petitioner's arguments in favor of relief.

South Kansas & Oklahoma Railroad and South East Kansas Railroad

The South Kansas & Oklahoma Railroad and the South East Kansas Railroad seek a permanent waiver of compliance from 49 CFR Part 232.13 (e)(1), concerning transfer and yard train air test. The aforementioned railroads work in Coffeyville, Kansas, preparing outbound trains on a daily basis. The trains are built throughout the day with cars being added at various times. According to the railroads, the space available does not allow for complete trains to be built without cutting or clearing four public crossings, including a Federal highway. The trains depart each day after receiving an initial terminal air test but they cannot be air tested at locations where the trains are made up without blocking some or all of the aforementioned crossings for significant amounts of time. The railroads would like to put trains together and pull them to the edge of town where they can be tested without blocking any public crossings. The track speed is governed by restricted speed with a maximum of 10 mph, all within yard limits. Currently, the railroads make two air tests of the same train within a two mile area. The railroads state that the city of Coffeyville has one road accessibility to the south part of town when the aforementioned crossings are blocked, thus the waiver would allow for safer access by emergency personnel, as well as save the public from long delays by blocked crossings.

Interested parties are invited to participate in these proceedings by submitting written views, data, or comments. FRA does not anticipate scheduling a public hearing in connection with these proceedings since the facts do not appear to warrant a hearing. If any interested party desires an opportunity for oral comment, they should notify FRA, in writing, before the end of the comment period and specify the basis for their request.

All communications concerning these proceedings should identify the appropriate docket number (e.g., Waiver Petition Docket Number PB–96–2) and must be submitted in triplicate to the Docket Clerk, Office of Chief Counsel, FRA, Nassif Building, 400 Seventh Street S.W., Washington, D.C. 20590. Communications received within 30 days of the date of this notice will be considered by FRA before final action is taken. Comments received after that date will be considered as far as practicable. All written communications concerning these proceedings are available for examination during regular business hours (9:00 a.m.–5:00 p.m.) at FRA's temporary docket room located at 1120 Vermont Avenue, N.W., Room 7051, Washington, D.C. 20005.

Issued in Washington, DC, on December 20, 1996.

Phil Olekszyk,

Deputy Associate Administrator for Safety Compliance and Program Implementation.

[FR Doc. 96–33304 Filed 12–31–96; 8:45 am]

BILLING CODE 4910–06–P

UNITED STATES INFORMATION AGENCY

Community Connections

ACTION: Notice—request for proposals.

SUMMARY: The Office of Citizen Exchanges, Russia/Eurasia Division of the United States Information Agency's Bureau of Educational and Cultural Affairs announces a competition for an assistance award. Public and private non-profit organizations meeting the provisions described in IRS regulation 26 CFR 1.501(c)(3)–1 may apply to organize and implement community-based, professional programs for entrepreneurs, legal professionals and government officials from Russia, Ukraine, Moldova, Armenia, Belarus, and Georgia. The objective of Community Connections, the successor to Business for Russia, is to enhance the participants' skills in business and entrepreneurship, law, and local governance. USIA is interested in proposals that provide both professional experience and exposure to American life and culture through internships hosted by U.S. business and local governmental and legal institutions, and home stays with local community members. An overall objective of Community Connections is to establish long term lasting relationships among U.S. and international audiences. This program is not academic in nature; rather, it is designed to provide practical, hands-on training in American business, legal and public sector environments which can be transferred upon an individual's return home. The Agency welcomes innovative proposals which combine elements of professional enrichment, job shadowing and internships appropriate to the language ability and interests of the participants.

Overall grant-making authority for this program is contained in the Mutual Educational and Cultural Exchange Act of 1961, Public Laws 87–256, as amended, also known as the Fulbright-Hays Act. The purpose of the Act is ''to enable the Government of the United States to increase mutual understanding between the people of the United States and the people of other countries . . .; to strengthen the ties which unite us with other nations by demonstrating the educational and cultural interests, developments, and achievements of the people of the United States and other nations . . . and thus to assist in the development of friendly, sympathetic and peaceful relations between the United States and the other countries of the world.'' The funding authority for the program cited above is provided through the *Freedom* Support Act.

Programs and projects must conform with Agency requirements and guidelines outlined in the Solicitation Package. USIA projects and programs are subject to the availability of funds.

ANNOUNCEMENT TITLE AND NUMBER: All communications with USIA concerning this announcement should refer to the above title and reference number E/PN–97–18.

DEADLINE FOR PROPOSALS: All copies must be received at the U.S. Information Agency by 5 p.m. Washington, D.C. time on Friday, February 28, 1997. Faxed documents will not be accepted, nor will documents postmarked February 28, 1997 but received at a later date. It is the responsibility of each applicant to ensure that proposals are received by the above deadline.

FOR FURTHER INFORMATION CONTACT: The Office of Citizen Exchanges, Russia/Eurasia Division, E/PN Room 216, U.S. Information Agency, 301 4th Street, S.W., Washington, D.C. 20547, Phone: (202) 401–6884, fax: (202) 619–4350, internet: vrector@usia.gov to request a Solicitation Package containing more detailed award criteria, required application forms, and standard guidelines for preparing proposals, including specific criteria for preparation of the proposal budget.

TO DOWNLOAD A SOLICITATION PACKAGE VIA INTERNET: The Solicitation package may be downloaded from USIA's website at http://www.usia.gov/or from the Internet Gopher at gopher://gopher.usia.gov. Select ''Education and Cultural Exchanges'', then select ''Current Request for Proposals (RFPs).'' Please read ''About the Following RFPs'' before beginning to download.

Please specify USIA Program Officer Michael Weider on all inquiries and correspondence. Interested applicants should read the complete Federal Register announcement before sending inquiries or submitting proposals. Once the RFP deadline has passed, Agency staff may not discuss this competition in any way with applicants until the Bureau proposal review process has been completed.

SUBMISSIONS: Applicants must follow all instructions given in the Solicitation Package. The original and 12 copies of the application should be sent to: U.S. Information Agency, Ref.: E/PN–97–18, Office of Grants Management, E/XE, Room 326, 301 4th Street, S.W., Washington, D.C. 20547.

DIVERSITY GUIDELINES: Pursuant to the Bureau's authorizing legislation, programs must maintain a non-political character and should be balanced and representative of the diversity of American political, social, and cultural life.''Diversity'' should be interpreted in the broadest sense and ecompass differences including, but not limited, to ethnicity, race, gender, religion, geographic location, socio-economic status, and physical challenges. Applicants are strongly encouraged to adhere to the advancement of this principle both in program administration and in program content. Please refer to the review criteria under the 'Support for Diversity' section for specific suggestions on incorporating diversity into the total proposal.

SUPPLEMENTARY INFORMATION:

Overview

Community Connections seeks to establish and strengthen links between American communities and communities in Russia, Ukraine and Moldova. Contingent upon the availability of funds, we also anticipate expanding the program to include audiences from Armenia, Belarus and Georgia. Community Connections will focus on business (particularly extrepreneurship), the legal profession and its relationship to the administration of justice, and issues of concern for local and regional government. IN order to expand the reach and impact of Community Connections, the program will recruit both English speaking participants and participants with little or no English-language skills.

Pending availability of funds, it is anticipated that approximately 1,200 professionals will participate in this cycle of the FY 1997-funded Community Connections program. All participants will be recruited from the selected regions by experienced U.S. organizations with offices in Russia and the other previously mentioned countries. It is anticipated that approximately half of all participants will be from Russia, one third from Ukraine, and the remainder from Moldova, Armenia, Belarus and Georgia.

Guidelines

In order to make the most effective use of the limited financial resources available while, at the same time, maintaining a maximum degree of program flexibility, the Office of Citizen Exchanges asks that interested organizations submit proposals to host no fewer than 30 participants in total. Organizations must host at least one group of participants each from two of the three subject components of the program. In the past, in an effort to minimize administrative expenses, organizations have hosted no fewer than ten participants at any given time. Programs for business people will be from four to five weeks in length; programs for legal professionals will be from three to four weeks in length; and programs for government officials will be from two to three weeks in length. It is anticipated that programs will be conducted between late summer of 1997 and late summer 1998. Care must be taken to allow sufficient time between programs to prepare for the following group. Organizations proposing to develop programs for additional groups of participants beyond the minimum must demonstrate that they have either allowed for sufficient preparatory time between programs or have the necessary human, physical and financial resources to handle any overlap.

Participants will be assigned to U.S. host communities by the Office of Citizen Exchanges based on the following factors: existing ties between the regions of origin of the participants, the locations of the U.S. grantee organizations, the professional interests of the participants, and the areas of strength of U.S. grantee organizations.

A proposal's cost-effectiveness, including in-kind contributions and ability to keep administrative cost low, is a major consideration in the review process. Cost-sharing may be in the form of allowable direct or indirect costs. The Recipient must maintain written records to support all allowable costs which are claimed as being its contribution to cost participation, as well as costs to be paid by the Federal Government. Such records are subject to audit. The basis for determining the value of cash and in-kind contributions must be in accordance with OMB Circular A–110 (revised subpart C.23), ''Cost-Sharing and Matching'' and should be described in the proposal. In the event that the Recipient does not provide the minimum amount of cost-sharing as stipulated in the Recipient's budget, the Agency's contribution will be reduced in proportion to the Recipient's contribution.

Contingent upon the availability of funds from one fiscal year to the next, USIA intends to establish long-term continuing relationships with U.S. organizations which have demonstrated particular expertise in the planning and administration of long standing programs of importance to United States foreign policy, such as Community Connections. Accordingly, USIA reserves the right to extend grant programs found to be effective, by annual amendment for up to three additional fiscal years (not to exceed 5 years total), to provide continued support for this program. At USIA's discretion, organizations may be requested to continue activities for specific audiences or to expand target audiences within the scope of the program (e.g., an organization may be requested to host participants from the same or another discipline—local government, business, or legal profession—from the same or another country included in the program) to meet the changing needs of this program initiative.

The Fulbright-Hays Act, as amended, provides authority to establish long-standing relationships with grantees to further U.S. foreign policy. In recognition of the need to establish such long-term program expertise, an incumbent grantee (which has been found to be effective) may make reference to its current program plans/grant agreement, or incorporate such program by reference and identify any changes, amendments, revisions, improvements, etc. to such current program that it would propose to implement under this solicitation.

Proposed Budget

Organizations must submit a comprehensive line item budget based on the specific guidance in the Solicitation Package. For reference purposes, past programs have averaged a total of $6,300 for each participant hosted. Please use this figure as a guide when preparing your budget.

Grants awarded to eligible organizations with less than four years of experience in conducting international exchange programs will be limited to $60,000.

Review Process

USIA will acknowledge receipt of all proposals and will review them for technical eligibility. Proposals will be deemed ineligible if they do not fully adhere to the guidelines stated herein and in the Solicitation Package. Eligible proposals will be forwarded to panels of USIA officers for advisory review. All eligible proposals will be reviewed by the program office, as well as the USIA Office of Eastern European and NIS Affairs and USIA posts in Russia, Ukraine, Moldova, Armenia, Belarus and Georgia. Proposals may be reviewed by the Office of the General Counsel or by other Agency elements. Funding decisions are at the discretion of the USIA Associate Director for Educational and Cultural Affairs. Final technical authority for assistance awards (grants or cooperative agreements) resides with the USIA grants officer.

Review Criteria

Technically eligible applications will be competitively reviewed according to the criteria stated below:

1. Program planning and ability to achieve objectives: Detailed agenda and relevant work plan should demonstrate careful and thorough preparation to carry out substantive programs which have a high likelihood of achieving program objectives. Agenda and plan should adhere to the program overview and guidelines described above. Objectives should be reasonable, feasible, and flexible.

2. Institutional capability: Organization should demonstrate sufficient skills and experience in hosting visitors from other countries and ability to utilize local business, legal and governmental resources and voluntary support. Thematic expertise in project subject matter must be demonstrated.

3. Cost-effectiveness: The overhead and administrative components of the proposal, including salaries and honoraria, should be kept as low as possible. All other items should be necessary and appropriate. Proposals should also maximize cost-sharing through other private sector support as well as institutional direct funding contributions.

4. Support of Diversity: Proposals should demonstrate the recipient's commitment to promoting the awareness and understanding of diversity.

Notice

The terms and conditions published in this RFP are binding and may not be modified by any USIA representative. Explanatory information provided by the Agency that contradicts published language will not be binding. Issuance of the RFP does not constitute an award commitment on the part of the Government. The Agency reserves the right to reduce, revise, or increase proposal budgets in accordance with the needs of the program and the availability of funds. Awards made will be subject to periodic reporting and evaluation requirements.

Notification

Final awards cannot be made until funds have been appropriated by Congress, allocated and committed through internal USIA procedures.

Dated: December 24, 1996.

Dell Pendergrast,

Deputy Associate Director for Educational and Cultural Affairs.

[FR Doc. 96–33317 Filed 12–31–96 ; 8:45 am]

BILLING CODE 8230–01–M

Corrections

Federal Register
Vol. 62, No. 1
Thursday, January 2, 1997

This section of the FEDERAL REGISTER contains editorial corrections of previously published Presidential, Rule, Proposed Rule, and Notice documents. These corrections are prepared by the Office of the Federal Register. Agency prepared corrections are issued as signed documents and appear in the appropriate document categories elsewhere in the issue.

DEPARTMENT OF COMMERCE

International Trade Administration

[A-427-801, A-428-801, A-475-801, A-588-804, A-559-801, A-401-801, A-412-801]

Anitfriction Bearings (Other Than Tapered Roller Bearings) and Parts Thereof From France, Germany, Italy, Japan, Singapore, Sweden, and the United Kingdom; Final Results of Antidumping Duty Administrative Reviews and Partial Termination of Administrative Reviews

Correction

In notice document 96–31753 beginning on page 66472 in the issue of Tuesday, December 17, 1996, make the following correction:

On page 66473, in the table under France, in the ''BBs'' column, in the eighth line, ''70.73'' should read ''0.73''.

BILLING CODE 1505–01–D

federal register

Thursday
January 2, 1997

Part II

United States Sentencing Commission

Sentencing Guidelines for United States Courts; Notice

UNITED STATES SENTENCING COMMISSION

Sentencing Guidelines for United States Courts

AGENCY: United States Sentencing Commission.

ACTION: Notice of (1) proposed temporary, emergency guideline amendments increasing penalties for alien smuggling and fraudulent use of government-issued documents; (2) proposed temporary, emergency guideline amendments imposing penalties for involuntary servitude, peonage, and slave trade offense; (3) proposed temporary, emergency guideline amendments increasing the penalties for offenses involving list I chemicals; and (4) proposed non-emergency amendments to sentencing guidelines and commentary. Request for Comment. Notice of hearing.

SUMMARY: The Sentencing Commission hereby gives notice of the following actions: (1) pursuant to its authority under sections 203, 211, and 218 of the Illegal Immigration Reform and Immigrant Responsibility Act of 1996, the Commission is preparing to promulgate amendments to §§ 2L1.1, 2L2.1, 2L2.2, and 2H4.1 and accompanying commentary; (2) pursuant to its authority under section 302 of the Comprehensive Methamphetamine Control Act of 1996, the Commission is preparing to promulgate amendments to § 2D1.11 and accompanying commentary; and (3) pursuant to section 217(a) of the Comprehensive Crime Control Act of 1984 (28 U.S.C. 994 (a) and (p)), the Commission is considering promulgating certain other non-emergency amendments to the sentencing guidelines and commentary. The Commission may submit the latter, non-emergency amendments to the Congress not later than May 1, 1997.

This notice sets forth the emergency and other proposed amendments and a synopsis of the issues addressed by the amendments as well as additional issues for comment. The proposed amendments are presented in this notice in one of two formats. First, some of the amendments are proposed as specific revisions to a guideline or commentary. Bracketed text within a proposed amendment indicates alternative proposals and that the Commission invites comment and suggestions for appropriate policy choices; for example, a proposed enhancement of [3–5] levels means a proposed enhancement of either three, four, or five levels. Similarly, a proposed enhancement of [4] levels indicates that the Commission is considering, and invites comment on, alternative policy choices. Second, the Commission has highlighted certain issues for comment and invites suggestions for specific amendment language.

DATES: (1) Emergency Amendments. Comment on the several emergency amendments set forth in this notice should be received by the Commission not later than February 4, 1997. After considering any public comment, the Commission plans to address possible promulgation of the emergency amendments at its meeting scheduled for February 11, 1997, at the Commission's offices in the Thurgood Marshall Federal Judiciary Building (meeting time to be determined).

(2) Non-Emergency Amendments. Comment on the non-emergency amendments and issues set forth in this notice should be received not later than March 17, 1997. The Commission has scheduled a public hearing on the proposed non-emergency amendments for March 17, 1997, at the Thurgood Marshall Federal Judiciary Building, One Columbus Circle, N.E,. Washington, D.C. 20002–8002.

A person who desires to testify at the public hearing should notify Michael Courlander, Public Information Specialist, at (202) 273–4590 not later than March 3, 1997. Written testimony for the hearing must be received by the Commission not later than March 10, 1997. Submission of written testimony is a requirement for testifying at the public hearing.

ADDRESSES: Public Comment should be sent to: United States Sentencing Commission, One Columbus Circle, N.E., Suite 2–500, Washington, D.C. 20002–8002, Attention: Public Information.

FOR FURTHER INFORMATION CONTACT: Michael Courlander, Public Information Specialist, Telephone: (202) 273–4590.

Authority: 28 U.S.C. 994 (a), (o), (p), (x).

Richard P. Conaboy,

Chairman.

Emergency Amendments

Section 2D1.11 Unlawfully Distributing, Importing, Exporting or Possessing a Listed Chemical; Attempt or Conspiracy

1. Synopsis of Proposed Amendment: This amendment implements section 302 of the Comprehensive Methamphetamine Control Act of 1996. That section raises the statutory maximum penalties under 21 U.S.C. 841(d) and 960(d) from ten to twenty years' imprisonment. The Act also instructs the Commission to increase by at least two levels the offense levels for offenses involving list I chemicals under 21 U.S.C. 841(d) (1) and (2) and 960(d) (1) and (3). These offenses involve the possession and importation of listed chemicals knowing, or having reasonable cause to believe, the chemicals will be used to unlawfully manufacture a controlled substance. In carrying out these instructions, the Act requires that the offense levels be calculated proportionately on the basis of the quantity of controlled substance that reasonably could be manufactured in a clandestine setting using the quantity of list I chemical possessed, distributed, imported, or exported.

Current Operation of the Guidelines: Offenses involving violations under the above statutes are covered under § 2D1.11 (Unlawfully Distributing, Importing, Exporting, or Possessing a Listed Chemical). This guideline uses a Chemical Quantity Table to determine the base offense level. The guideline also has a cross reference to § 2D1.1 (Unlawfully Manufacturing, Importing, Exporting, or Trafficking) for cases involving the actual manufacture, or attempt to manufacture, a controlled substance.

The Chemical Quantity Table was developed in two steps. First, the amount of listed chemical needed to produce a quantity of controlled substance in the Drug Quantity Table in § 2D1.1 was determined. The amount of listed chemical was based on 50% of theoretical yield.[1] The 50% figure was used because, after much study, this figure was determined to be a fair estimate of the amount of controlled substance that typically could be produced in a clandestine laboratory.

Second, the offense level in § 2D1.11 was adjusted downward by eight levels from the level in the Drug Quantity § 2D1.1. There were several reasons for these adjustments. One, the listed chemical offenses involved an intent to manufacture a controlled substance, not the actual manufacture, or attempt to manufacture, a controlled substance. For cases involving an actual or attempted manufacture of a controlled substance, § 2D1.11 contains a cross reference to § 2D1.1. Another reason for the reduction in offense level from the offense levels in § 2D1.1 was the fact that statutes covering listed chemicals had maximum sentences of ten years' imprisonment, whereas some of the controlled substance offenses had

[1] Theoretical yield is the amount of a controlled substance that could be produced in a perfect reaction. It is based on a chemical equation/mathematical formula and does not occur in reality.

maximum sentences of life imprisonment. If the offense level was not reduced in § 2D1.11, almost all of the cases would have resulted in sentences at or exceeding the statutory maximum. A third reason was that it is more difficult to make an accurate determination of the amount of finished product based on only one listed chemical as opposed to several listed chemicals and/or lab equipment. By not reducing the offense level, there would have been the possibility that the person who had only one precursor would get a higher offense level than someone who actually manufactured the controlled substance.

The proposed amendment raises the penalties for list I chemicals by two levels. The top of the Chemical Quantity Table for list I chemicals will now be at level 30. The offense level for list II chemicals remains the same. With the new statutory maximum of 20 years, the guidelines will now be able to better take into account aggravating adjustments such as those for role in the offense. Additionally, the increased statutory maximum will allow for higher sentences for cases convicted under this statute that involve the actual manufacture of a controlled substance.

Proposed Amendment: Section 2D1.11(d) is amended by deleting subsections (d) (1)—(9) and inserting in lieu thereof the following:

''(d) Chemical Quality Table*

Listed chemicals and quantity	Base offense level
(1) List I Chemicals	Level 30
17.8 KG or more of Benzaldehyde;	
20 KG or more of Benzyl Cyanide;	
20 KG or more of Ephedrine;	
200 G or more of Ergonovine;	
400 G or more of Ergotamine;	
20 KG or more of Ethylamine;	
44 KG or more of Hydriodic Acid;	
320 KG or more of Isoafrole;	
4 KG or more of Methylamine;	
1500 KG or more of N-Methylephedrine;	
500 KG or more of N-Methylpseudoephedrine;	
12.6 KG or more of Nitroethane;	
200 KG or more of Norpseudoephedrine;	
20 KG or more of Phenylacetic Acid;	
200 KG or more of Phenylpropanolamine;	
10 KG or more of Piperidine;	
320 KG or more of Piperonal;	
1.6 KG or more of Propionic Anhydride;	
20 KG or more of Pseudoephedrine;	
320 KG or more of Safrole;	
400 KG or more of 3, 4-Methylenedioxyphenyl-2-propanone;	
(2) List I Chemicals	Level 28.
At least 5.3 KG but less than 17.8 KG of Benzaldehyde;	
At least 6 KG but less than 20 KG of Benzyl Cyanide;	
At least 6 KG but less than 20 KG of Ephedrine;	
At least 60 G but less than 200 G of Ergonovine;	
At least 120 G but less than 400 G of Ergotamine;	
At least 6 KG but less than 20 KG of Ethylamine;	
At least 13.2 KG but less than 44 KG of Hydriodic Acid;	
At least 96 KG but less than 320 KG of Isoafrole;	
At least 1.2 KG but less than 4 KG of Methylamine;	
At least 150 KG but less than 500 KG of N-Methylephedrine;	
At least 150 KG but less than 500 KG of N-Methylpseudoephedrine;	
At least 3.8 KG but less than 12.6 KG of Nitroethane;	
At least 60 KG but less than 200 KG of Norpseudoephedrine;	
At least 6 KG but less than 20 KG of Phenylacetic Acid;	
At least 60 KG but less than 200 KG of Phenylpropanolamine;	
At least 3 KG but less than 10 KG of Piperidine;	
At least 96 KG but less than 320 KG of Piperonal;	
At least 480 G but less than 1.6 KG of Propionic Anhydride;	
At least 6 KG but less than 20 KG of Pseudoephedrine;	
At least 96 KG but less than 320 KG of Safrole;	
At least 120 KG but less than 400 KG of 3, 4-Methylenedioxyphenyl-2-propanone;	
List II Chemicals	
KG or more of Acetic Anhydride;	
1175 KG or more of Acetone;	
20 KG or more of Benzyl Chloride;	
1075 KG or more of Ethyl Ether;	
1200 KG or more KG of Methyl Ethyl Ketone;	
10 KG or more of Potassium Permanganate;	
1300 KG or more of Toluene.	
(3) List I Chemicals	Level 26.

Listed chemicals and quantity	Base offense level
At least 1.8 KG but less than 5.3 KG of Benzaldehyde;	
At least 2 KG but less than 6 KG of Benzyl Cyanide;	
At least 2 KG but less than 6 KG of Ephedrine;	
At least 20 G but less than 60 G of Ergonovine;	
At least 40 G but less than 120 G of Ergotamine;	
At least 2 KG but less than 6 KG of Ethylamine;	
At least 4.4 KG but less than 13.2 KG of Hydriodic Acid;	
At least 32 KG but less than 96 KG of Isoafrole;	
At least 400 G but less than 1.2 KG of Methylamine;	
At least 50 KG but less than 150 KG of N-Methylephedrine;	
At least 50 KG but less than 150 KG of N-Methylpseudoephedrine;	
At least 1.3 KG but less than 3.8 KG of Nitroethane;	
At least 20 KG but less than 60 KG of Norpseudoephedrine;	
At least 2 KG but less than 6 KG of Phenylacetic Acid;	
At least 20 KG but less than 60 KG of Phenylpropanolamine;	
At least 1 KG but less than 3 KG of Piperidine;	
At least 32 KG but less than 96 KG of Piperonal;	
At least 160 G but less than 480 G of Propionic Anhydride;	
At least 2 KG but less than 6 KG of Pseudoephedrine;	
At least 32 KG but less than 96 KG of Safrole;	
At least 40 KG but less than 120 KG of 3, 4-Methylenedioxyphenyl-2-propanone;	
List II Chemicals	
At least 3.3 KG but less than 11 KG of Acetic Anhydride;	
At least 352.5 KG but less than 1175 KG of Acetone;	
At least 6 KG but less than 20 KG of Benzyl Chloride;	
At least 322.5 KG but less than 1075 KG of Ethyl Ether;	
At least 360 KG but less than 1200 KG of Methyl Ethyl Ketone;	
At least 3 KG but less than 10 KG of Potassium Permanganate;	
At least 390 KG but less than 1300 KG of Toluene.	
(4) List I Chemicals	Level 24.
At least 1.2 KG but less than 1.8 KG of Benzaldehyde;	
At least 1.4 KG but less than 2 KG of Benzyl Cyanide;	
At least 1.4 KG but less than 2 KG of Ephedrine;	
At least 14 G but less than 20 G of Ergonovine;	
At least 28 G but less than 40 G of Ergotamine;	
At least 1.4 KG but less than 2 KG of Ethylamine;	
At least 3.08 KG but less than 4.4 KG of Hydriodic Acid;	
At least 22.4 KG but less than 32 KG of Isoafrole;	
At least 280 G but less than 400 G of Methylamine;	
At least 35 KG but less than 50 KG of N-Methylephedrine;	
At least 35 KG but less than 50 KG of N-Methylpseudoephedrine;	
At least 879 G but less than 1.3 KG of Nitroethane;	
At least 14 KG but less than 20 KG of Norpseudoephedrine;	
At least 1.4 KG but less than 2 KG of Phenylacetic Acid;	
At least 14 KG but less than 20 KG of Phenylpropanolamine;	
At least 700 G but less than 1 KG of Piperidine;	
At least 22.4 KG but less than 32 KG of Piperonal;	
At least 112 G but less than 160 G of Propionic Anhydride;	
At least 1.4 KG but less than 2 KG of Pseudoephedrine;	
At least 22.4 KG but less than 32 KG of Safrole;	
At least 28 KG but less than 40 KG of 3, 4-Methylenedioxyphenyl-2-propanone;	
List II Chemicals	
At least 1.1 KG but less than 3.3 KG of Acetic Anhydride;	
At least 117.5 KG but less than 352.5 KG of Acetone;	
At least 2 KG but less than 6 KG of Benzyl Chloride;	
At least 107.5 KG but less than 322.5 KG of Ethyl Ether;	
At least 120 KG but less than 360 KG of Methyl Ethyl Ketone;	
At least 1 KG but less than 3 KG of Potassium Permanganate;	
At least 130 KG but less than 390 KG of Toluene.	
(5) List I Chemicals	Level 22.

Listed chemicals and quantity	Base offense level
At least 712 G but less than 1.2 KG of Benzaldehyde;	
At least 800 G but less than 1.4 KG of Benzyl Cyanide;	
At least 800 G but less than 1.4 KG of Ephedrine;	
At least 8 G but less than 14 G of Ergonovine;	
At least 16 G but less than 28 G of Ergotamine;	
At least 800 G but less than 1.4 KG of Ethylamine;	
At least 1.76 KG but less than 3.08 KG of Hydriodic Acid;	
At least 12.8 KG but less than 22.4 KG of Isoafrole;	
At least 160 G but less than 280 G of Methylamine;	
At least 20 KG but less than 35 KG of N-Methylephedrine;	
At least 20 KG but less than 35 KG of N-Methylpseudoephedrine;	
At least 503 G but less than 879 G of Nitroethane;	
At least 8 KG but less than 14 KG of Norpseudoephedrine;	
At least 800 G but less than 1.4 KG of Phenylacetic Acid;	
At least 8 KG but less than 14 KG of Phenylpropanolamine;	
At least 400 G but less than 700 G of Piperidine;	
At least 12.8 KG but less than 22.4 KG of Piperonal;	
At least 64 G but less than 112 G of Propionic Anhydride;	
At least 800 G but less than 1.4 KG of Pseudoephedrine;	
At least 12.8 KG but less than 22.4 KG of Safrole;	
At least 16 KG but less than 28 KG of 3, 4-Methylenedioxyphenyl-2-propanone;	
List II Chemicals	
At least 726 G but less than 1.1 KG of Acetic Anhydride;	
At least 82.25 KG but less than 117.5 KG of Acetone;	
At least 1.4 KG but less than 2 KG of Benzyl Chloride;	
At least 75.25 KG but less than 107.5 KG of Ethyl Ether;	
At least 84 KG but less than 120 KG of Methyl Ethyl Ketone;	
At least 700 G but less than 1 KG of Potassium Permanganate;	
At least 91 KG but less than 130 KG of Toluene.	
(6) List I Chemicals	Level 20.
At least 178 G but less than 712 G of Benzaldehyde;	
At least 200 G but less than 800 G of Benzyl Cyanide;	
At least 200 G but less than 800 G of Ephedrine;	
At least 2 G but less than 8 G of Ergonovine;	
At least 4 G but less than 16 G of Ergotamine;	
At least 200 G but less than 800 G of Ethylamine;	
At least 440 G but less than 1.76 KG of Hydriodic Acid;	
At least 3.2 KG but less than 12.8 KG of Isoafrole;	
At least 40 G but less than 160 G of Methylamine;	
At least 5 KG but less than 20 KG of N-Methylephedrine;	
At least 5 KG but less than 20 KG of N-Methylpseudoephedrine;	
At least 126 G but less than 503 G of Nitroethane;	
At least 2 KG but less than 8 KG of Norpseudoephedrine;	
At least 200 G but less than 800 G of Phenylacetic Acid;	
At least 2 KG but less than 8 KG of Phenylpropanolamine;	
At least 100 G but less than 400 G of Piperidine;	
At least 3.2 KG but less than 12.8 KG of Piperonal;	
At least 16 G but less than 64 G of Propionic Anhydride;	
At least 200 G but less than 800 G of Pseudoephedrine;	
At least 3.2 KG but less than 12.8 KG of Safrole;	
At least 4 KG but less than 16 KG of 3, 4-Methylenedioxyphenyl-2-propanone;	
List II Chemicals	
At least 440 G but less than 726 G of Acetic Anhydride;	
At least 47 KG but less than 82.25 KG of Acetone;	
At least 800 G but less than 1.4 KG of Benzyl Chloride;	
At least 43 KG but less than 75.25 KG of Ethyl Ether;	
At least 48 KG but less than 84 KG of Methyl Ethyl Ketone;	
At least 400 G but less than 700 G of Potassium Permanganate;	
At least 52 KG but less than 91 KG of Toluene.	
(7) List I Chemicals	Level 18.

Listed chemicals and quantity	Base offense level
At least 142 G but less than 178 G of Benzaldehyde;	
At least 160 G but less than 200 G of Benzyl Cyanide;	
At least 160 G but less than 200 G of Ephedrine;	
At least 1.6 G but less than 2 G of Ergonovine;	
At least 3.2 G but less than 4 G of Ergotamine;	
At least 160 G but less than 200 G of Ethylamine;	
At least 352 G but less than 440 G of Hydriodic Acid;	
At least 2.56 KG but less than 3.2 KG of Isoafrole;	
At least 32 G but less than 40 G of Methylamine;	
At least 4 KG but less than 5 KG of N-Methylephedrine;	
At least 4 KG but less than 5 KG of N-Methylpseudoephedrine;	
At least 100 G but less than 126 G of Nitroethane;	
At least 1.6 KG but less than 2 KG of Norpseudoephedrine;	
At least 160 G but less than 200 G of Phenylacetic Acid;	
At least 1.6 KG but less than 2 KG of Phenylpropanolamine;	
At least 80 G but less than 100 G of Piperidine;	
At least 2.56 KG but less than 3.2 KG of Piperonal;	
At least 12.8 G but less than 16 G of Propionic Anhydride;	
At least 160 G but less than 200 G of Pseudoephedrine;	
At least 2.56 KG but less than 3.2 KG of Safrole;	
At least 3.2 KG but less than 4 KG of 3, 4-Methylenedioxyphenyl-2-propanone;	
List II Chemicals	
At least 110 G but less than 440 G of Acetic Anhydride;	
At least 11.75 KG but less than 47 KG of Acetone;	
At least 200 G but less than 800 G of Benzyl Chloride;	
At least 10.75 KG but less than 43 KG of Ethyl Ether;	
At least 12 KG but less than 48 KG of Methyl Ethyl Ketone;	
At least 100 G but less than 400 G of Potassium Permanganate;	
At least 13 KG but less than 52 KG of Toluene.	
(8) List I Chemicals	Level 16.
At least 107 G but less than 142 G of Benzaldehyde;	
At least 120 G but less than 160 G of Benzyl Cyanide;	
At least 120 G but less than 160 G of Ephedrine;	
At least 1.2 G but less than 1.6 G of Ergonovine;	
At least 2.4 G but less than 3.2 G of Ergotamine;	
At least 120 G but less than 160 G of Ethylamine;	
At least 264 G but less than 352 G of Hydriodic Acid;	
At least 1.92 KG but less than 2.56 KG of Isoafrole;	
At least 24 G but less than 32 G of Methylamine;	
At least 3 KG but less than 4 KG of N-Methylephedrine;	
At least 3 KG but less than 4 KG of N-Methylpseudoephedrine;	
At least 75 G but less than 100 G of Nitroethane;	
At least 1.2 KG but less than 1.6 KG of Norpseudoephedrine;	
At least 120 G but less than 160 G of Phenylacetic Acid;	
At least 1.2 KG but less than 1.6 KG of Phenylpropanolamine;	
At least 60 G but less than 80 G of Piperidine;	
At least 1.92 KG but less than 2.56 KG of Piperonal;	
At least 9.6 G but less than 12.8 G of Propionic Anhydride;	
At least 120 G but less than 160 G of Pseudoephedrine;	
At least 1.92 KG but less than 2.56 KG of Safrole;	
At least 2.4 KG but less than 3.2 KG of 3, 4-Methylenedioxyphenyl-2-propanone;	
List II Chemicals	
At least 88 G but less than 110 G of Acetic Anhydride;	
At least 9.4 KG but less than 11.75 KG of Acetone;	
At least 160 G but less than 200 G of Benzyl Chloride;	
At least 8.6 KG but less than 10.75 KG of Ethyl Ether;	
At least 9.6 KG but less than 12 KG of Methyl Ethyl Ketone;	
At least 80 G but less than 100 G of Potassium Permanganate;	
At least 10.4 KG but less than 13 KG of Toluene.	
(9) List I Chemicals	Level 14.

Listed chemicals and quantity	Base offense level
At least 2.7 KG but less than 3.6 KG of Anthranilic Acid;	
At least 80.25 G but less than 107 G of Benzaldehyde;	
At least 90 G but less than 120 G of Benzyl Cyanide;	
At least 90 G but less than 120 G of Ephedrine;	
At least 900 MG but less than 1.2 G of Ergonovine;	
At least 1.8 G but less than 2.4 G of Ergotamine;	
At least 90 G but less than 120 G of Ethylamine;	
At least 198 G but less than 264 G of Hydriodic Acid;	
At least 1.44 G but less than 1.92 KG of Isoafrole;	
At least 18 G but less than 24 G of Methylamine;	
At least 3.6 KG but less than 4.8 KG of N-Acetylanthranilic Acid;	
At least 2.25 KG but less than 3 KG of N-Methylephedrine;	
At least 2.25 KG but less than 3 KG of N-Methylpseudoephedrine;	
At least 56.25 G but less than 75 G of Nitroethane;	
At least 900 G but less than 1.2 KG of Norpseudoephedrine;	
At least 90 G but less than 120 G of Phenylacetic Acid;	
At least 900 G but less than 1.2 KG of Phenylpropanolamine;	
At least 45 G but less than 60 G of Piperidine;	
At least 1.44 KG but less than 1.92 KG of Piperonal;	
At least 7.2 G but less than 9.6 G of Propionic Anhydride;	
At least 90 G but less than 120 G of Pseudoephedrine;	
At least 1.44 G but less than 1.92 KG of Safrole;	
At least 1.8 KG but less than 2.4 KG of 3, 4-Methylenedioxyphenyl-2-propanone;	
List II Chemicals	
At least 66 G but less than 88 G of Acetic Anhydride;	
At least 7.05 KG but less than 9.4 KG of Acetone;	
At least 120 G but less than 160 G of Benzyl Chloride;	
At least 6.45 KG but less than 8.6 KG of Ethyl Ether;	
At least 7.2 KG but less than 9.6 KG of Methyl Ethyl Ketone;	
At least 60 G but less than 80 G of Potassium Permanganate;	
At least 7.8 KG but less than 10.4 KG of Toluene.	
(10) List I Chemicals	Level 12.
Less than 2.7 KG of Anthranilic Acid;	
Less than 80.25 G of Benzaldehyde	
Less than 90 G of Benzyl Cyanide;	
Less than 90 G of Ephedrine;	
Less than 900 MG of Ergonovine;	
Less than 1.8 G of Ergotamine;	
Less than 90 G of Ethylamine;	
Less than 198 G of Hydriodic Acid;	
Less than 1.44 G of Isoafrole;	
Less than 18 G of Methylamine;	
Less than 3.6 KG of N-Acetylanthranilic Acid;	
Less than 2.25 KG of N-Methylephedrine;	
Less than 2.25 KG of N-Methylpseudoephedrine;	
Less than 56.25 G of Nitroethane;	
Less than 900 G of Norpseudoephedrine;	
Less than 90 G of Phenylacetic Acid;	
Less than 900 G of Phenylpropanolamine;	
Less than 45 G of Piperidine;	
Less than 1.44 KG of Piperonal;	
Less than 7.2 G of Propionic Anhydride;	
Less than 90 G of Pseudoephedrine;	
Less than 1.44 G of Safrole;	
Less than 1.8 KG of 3, 4-Methylenedioxyphenyl-2-propanone;	
List II Chemicals	
Less than 66 G of Acetic Anhydride;	
Less than 7.05 KG of Acetone;	
Less than 120 G of Benzyl Chloride;	
Less than 6.45 KG of Ethyl Ether;	
Less than 7.2 KG of Methyl Ethyl Ketone;	
Less than 60 G of Potassium Permanganate;	
Less than 7.8 KG of Toluene.	

The Commentary to § 2D1.11 captioned ''Application Notes'' is amended in Note 4(a) by deleting ''three kilograms'' and inserting in lieu thereof ''300 grams''; by deleting ''24'' each time it appears and inserting in lieu thereof ''26''; and by deleting ''14'' and inserting in lieu thereof ''16''.

Section 2L1.1—Alien Smuggling

2. Synopsis of Proposed Amendment: This amendment implements section 203 of the Illegal Immigration Reform and Immigrant Responsibility Act of 1996. Section 203 directs the Commission to amend the guidelines for offenses related to smuggling, transporting, or harboring illegal aliens.

The legislation directs the Commission to:

''(A) increase the base offense level for such offenses at least 3 offense levels above the applicable level in effect on the date of the enactment of this Act;

(B) review the sentencing enhancement for the number of aliens involved (U.S.S.G. 2L1.1(b)(2)), and increase the sentencing enhancement by at least 50 percent above the applicable enhancement in effect on the date of the enactment of this Act;

(C) impose an appropriate sentencing enhancement upon an offender with 1 prior felony conviction arising out of a separate and prior prosecution for an offense that involved the same or similar underlying conduct as the current offense, to be applied in addition to any sentencing enhancement that would otherwise apply pursuant to the calculation of the defendant's criminal history category; * * * [and an additional enhancement for 2 or more priors];

(E) impose an appropriate sentencing enhancement on a defendant who, in the course of committing an offense described in this subsection (i) murders or otherwise causes death, bodily injury, or serious bodily injury to a defendant; (ii) uses or brandishes a firearm or other dangerous weapon; or (iii) engages in conduct that consciously or recklessly places another in serious danger of death or serious bodily injury;

(F) consider whether a downward adjustment is appropriate if the offense is a first offense and involves the smuggling only of the alien's spouse or child * * * ''

The amendment provides for a higher base offense level as required by the legislation. In addition, the amendment provides for new specific offense characteristics outlined in the legislation and adjusts the current specific offense characteristics as directed by the legislation. Finally, the amendment provides for clarifying commentary.

Proposed Amendment: Section 2L1.1(a)(1) is amended by deleting ''20'' and inserting in lieu thereof ''[23–25]''.

Section 2L1.1(a)(2) is amended by deleting ''9'' and inserting in lieu thereof ''[12–14]''.

Section 2L1.1(b) is amended by deleting:

''(1) If the defendant committed the offense other than for profit and the base offense level is determined under subsection (a)(2), decrease by 3 levels.

(2) If the offense involved the smuggling, transporting, or harboring of six or more unlawful aliens, increase as follows:

Number of unlawful aliens smuggled, transported, or harbored	Increase in level
(A) 6–24	Add 2.
(B) 25–99	Add 4.
(C) 100 or more	Add 6.

(3) If the defendant is an unlawful alien who has been deported (voluntarily or involuntarily) on one or more occasions prior to the instant offense, and the offense level determined above is less than level 8, increase to level 8.''

and inserting in lieu thereof:

''(1) If the offense involves the smuggling, transporting, or harboring only of the defendant's spouse or child, decrease by [2–3] levels.

(2) If the offense involved the smuggling, transporting, or harboring of three or more unlawful aliens, increase as follows:

Number of unlawful aliens smuggled, transported, or harbored	Increase in level
(A) 3–5	Add 1.
(B) 6–11	Add 3.
(C) 12–24	Add 5.
(D) 25–99	Add 7.
(E) 100 or more	Add 9.

(3) [Option 1: If the defendant committed the instant offense subsequent to sustaining (A) one conviction for an immigration and naturalization offense, increase by 2 levels; or (B) two convictions for immigration and naturalization offenses each arising out of separate prosecutions, increase by 4 levels.]

[Option 2: If the defendant at the time of sentencing had been previously convicted of (A) one immigration and naturalization offense arising out of a separate and prior prosecution, increase by 2 levels; or (B) two immigration and naturalization offenses each arising out of separate prosecutions, increase by 4 levels.]

(4) (A) If a firearm was discharged, increase by 6 levels, but if the resulting offense level is less than level [22–24], increase to level [22–24];

(B) if a dangerous weapon (including a firearm) was brandished or otherwise used, increase by 4 levels, but if the resulting offense level is less than level [20–22], increase to level [20–22];

(C) if a dangerous weapon (including a firearm) was possessed, increase by 2 levels, but if the resulting offense level is less than level [18–20], increase to level [18–20].

[Option 1: (D) if the offense involved recklessly creating a substantial risk of death or serious bodily injury to another person, increase by 2 levels, but if the resulting offense level is less than level [18–20], increase to level [18–20]].

[Option 2: (5) If the offense involved recklessly creating a substantial risk of death or serious bodily injury to another person, increase by 2 levels, but if the resulting offense level is less than level [18–20], increase to level [18–20].

(6) If any person died or sustained bodily injury as a result of the offense, increase the offense level accordingly:

(1) Bodily Injury	Add 2 levels.
(2) Serious Bodily Injury	Add 4 levels.
(3) Permanent or Life-Threatening Bodily Injury.	Add 6 levels.
(4) Death	Add 8 levels.

(c) Cross Reference.

If any person was killed under circumstances that would constitute murder under 18 U.S.C. § 1111 had such killing taken place within the special maritime and territorial jurisdiction of the United States, apply the appropriate murder guideline from Chapter two, Part A, Subpart 1.''

The Commentary to § 2L1.1 captioned ''Application Notes'' is amended in Note 5 by deleting ''dangerous or inhumane treatment, death or bodily injury, possession of a dangerous weapon, or''.

The Commentary to § 2L1.1 captioned ''Application Notes is amended by inserting the following additional notes:

''[7. Under subsections (b)(4)(A) and (b)(4)(B), the defendant is accountable if (A) the defendant discharges, brandishes, or otherwise uses a firearm, or (B) another person discharges, brandishes, or otherwise uses a firearm and the defendant is aware of the presence of the firearm. Under subsection (b)(4)(C), the defendant is accountable if the defendant or another person possesses a dangerous weapon during the offense.]

8. Prior felony conviction(s) resulting in an adjustment under subsection (b)(3) are also counted for purposes of determining criminal history points pursuant to Chapter Four, Part A (Criminal History).

9. Reckless conduct triggering the adjustment from subsection(b)(5) can vary widely. Such conduct may include, but is not limited to, transporting persons in the trunk or engine compartment of a motor vehicle, carrying substantially more passengers than the rated capacity of a motor vehicle or vessel, or harboring persons in a crowded, dangerous, or inhumane condition. If the reckless conduct triggering the adjustment in subsection (b)(4)(C) includes only conduct related to fleeing from a law enforcement officer, do not apply an adjustment from § 3C1.2 (Reckless Endangerment During Flight). [Do not apply the adjustment in subsection (b)(4)(D) if the reckless

conduct that created a substantial risk of death or serious bodily injury includes only conduct related to weapon possession or use.]

10. An 'immigration and naturalization offense'' means any offense covered by Chapter 2, Part L.

11. For purposes of this section, the term ''child'' is defined at section 101(b)(1) of the Immigration and Nationality Act (8 U.S.C. § 1101(b)(1)) and ''spouse'' is defined at section 101(a)(35) of the Immigration and Nationality Act (8 U.S.C. § 1101(a)(35)).''

The Commentary to § 2L1.1 captioned ''Background'' is amended by deleting the following:

''A specific offense characteristic provides a reduction if the defendant did not commit the offense for profit. The offense level increases with the number of unlawful aliens smuggled, transported, or harbored.''

The Commentary to § 2L1.1 captioned ''Background'' is amended by inserting the following after ''In large scale'':

''smuggling or harboring''.

Section 2L2.1 and 2L2.2—Immigration Document Fraud

3. Synopsis of Proposed Amendment: This amendment implements section 211 of the Illegal Immigration Reform and Immigrant Responsibility act of 1996. Section 211 directs the Commission to amend the guidelines for offenses related to the fraudulent use of government issued documents. The Commission is directed to:

''(A) increase the base offense level for such offenses at least 2 offense levels above the level in effect on the date of the enactment of this Act;

(B) review the sentencing enhancement for the number of documents or passports involved (U.S.S.G. 2L2.1(b)(2)), and increase the upward enhancement by at least 50 percent above the applicable enhancement in effect on the date of the enactment of this Act;

(C) impose an appropriate sentencing enhancement upon an offender with 1 prior felony conviction arising out of a separate and prior prosecution for an offense that involved the same or similar underlying conduct as the current offense, to be applied in addition to any sentencing enhancement that would otherwise apply pursuant to the calculation of the defendant's criminal history category; . . . [and an additional enhancement for 2 or more priors];''

The amendment provides for a higher base offense level as required by the legislation. In addition, the amendment provides for a new specific offense characteristic for defendants who have one or more prior convictions for the same or similar conduct—as outlined in the legislation—and adjusts the current specific offense characteristics as directed by the legislation and consistent with other guidelines. Finally, the amendment provides for clarifying commentary.

Proposed Amendment: Section 2L2.1 is amended by deleting ''9'' and inserting in lieu thereof ''[11–13]''.

Section 2L2.1(b) is amended by deleting:

''(1) If the defendant committed the offense other than for profit, decrease by 3 levels.

(2) If the offense involved six or more documents or passports, increase as follows:

Number of documents/passports	Increase in level
(A) 6–24	Add 2.
(B) 25–99	Add 4.
(C) 100 or more	Add 6.''

and insert in lieu thereof:

''(1) [Option 1: If the defendant committed the offense other than for profit and had not been convicted of an immigration and naturalization offense prior to the commission of the instant offense, decrease by 3 levels.]

[Option 2: If the offense involves documents only related to the defendant's spouse or child, decrease by [2–3] levels.]

(2) If the offense involved three or more documents or passports, increase as follows:

Number of documents/passports	Increase in level
(A) 3–5	Add 1.
(B) 6–11	Add 3.
(C) 12–24	Add 5.
(D) 25–99	Add 7.
(E) 100 or more	Add 9.''

Section 2L2.1(b) is amended by inserting the following additional subdivision:

''(3) [Option 1: If the defendant committed the instant offense subsequent to sustaining (A) one conviction for an immigration and naturalization offense, increase by 2 levels; or (B) two convictions for immigration and naturalization offenses each arising out of separate prosecutions, increase by 4 levels.]

[Option 2: If the defendant at the time of sentencing had been previously convicted of (A) one immigration and naturalization offense arising out of a separate and prior prosecution, increase by 2 levels; or (B) two immigration and naturalization offenses each arising out of separate prosecutions, increase by 4 levels.]''

The Commentary to § 2L2.1 captioned ''Application Notes'' is amended by inserting the following additional notes:

''4. Prior felony conviction(s) resulting in an adjustment under subsection (b)(4) are also counted for purposes of determining criminal history points pursuant to Chapter Four, Part A (Criminal History).

5. An ''immigration and naturalization offense'' means any offense covered by Chapter 2, Part L.

6. For purposes of this section, the term ''child'' is defined at section 101(b)(1) of the Immigration and Nationality Act (8 U.S.C. § 1101(b)(1)) and ''spouse'' is defined at section 101(a)(35) of the Immigration and Nationality Act (8 U.S.C. § 1101(a)(35)).''

Section 2L2.2(a) is amended by deleting ''6'' and inserting in lieu thereof ''[8–10]''.

Section 2L2.2(b) is amended by deleting ''Characteristic'' and inserting in lieu thereof ''Characteristics''; and by inserting the following new subdivision:

''(2) [Option 1: If the defendant committed the instant offense subsequent to sustaining (A) one conviction for an immigration and naturalization offense, increase by 2 levels; or (B) two convictions for immigration and naturalization offenses each arising out of separate prosecutions, increase by 4 levels.]

[Option 2: If the defendant at the time of sentencing had been previously convicted of (A) one immigration and naturalization offense arising out of a separate and prior prosecution, increase by 2 levels; or (B) two immigration and naturalization offenses each arising out of separate prosecutions, increase by 4 levels.]''

The Commentary to § 2L2.2 captioned ''Application Note'' is amended by deleting and inserting in lieu thereof ''Notes''; and by inserting the following additional notes:

''2. Prior felony conviction(s) resulting in an adjustment under subsection (b)(4) are also counted for purposes of determining criminal history points pursuant to Chapter Four, Part A (Criminal History).

3. An 'immigration and naturalization offense' means any offense covered by Chapter 2, Part L.''.

Section 2H4.1—Involuntary Servitude

4. Synopsis of Proposed Amendment: This amendment implements section 218 of the Illegal Immigration Reform and Immigrant Responsibility act of 1996. Section 218 directs the

Commission to review the guideline for peonage, involuntary servitude and slave trade offenses and amend the guideline, as necessary, to:

''(A) reduce or eliminate any unwarranted disparity * * * between the sentences for peonage, involuntary servitude, and slave trade offenses, and the sentences for kidnapping offenses and alien smuggling;

(B) ensure that the applicable guidelines for defendants convicted of peonage, involuntary servitude, and slave trade offenses are sufficiently stringent to deter such offenses and adequately reflect the heinous nature of such offenses; and

(C) ensure that the guidelines reflect the general appropriateness of enhanced sentences for defendants whose peonage, involuntary servitude, or slave trade offenses involve, (i) a large number of victims; (ii) the use or threatened use of a dangerous weapon; or (iii) a prolonged period of peonage or involuntary servitude.''

The amendment generally tracks the structure of the kidnapping guideline.

Section 2H4.1 is amended by deleting the section in its entirety and replacing in lieu thereof the following:

''§ 2H4.1. Peonage, Involuntary Servitude, and Slave Trade

(a) Base Offense Level (Apply the greater):

(1) [18–24]

(b) Specific Offense Characteristics

(1) (A) If any victim sustained permanent or life-threatening bodily injury, increase by [4–6] levels; (B) if any victim sustained serious bodily injury, increase by [2–4] levels.

(2) If a dangerous weapon was used, increase by [2–4] levels.

(3) If any victim was held in a condition of servitude or peonage for (A) more than one year, increase by [3–5] levels; (B) between 180 days and one year, increase by [2–4] levels; (C) more than thirty days but less than 180 days, increase by [1–3] level.

(4) If any other offense was committed during the commission of or in connection with the servitude, peonage, or slave trade offense, increase to the greater of:

(A) 2 plus the offense level as determined above, or

(B) 2 plus the offense level from the offense guideline applicable to that other offense, but in no event greater than level 43.

Commentary

Statutory Provisions: 18 U.S.C. §§ 241, 1581–1588.

Application Notes:

1. Under subsection (b)(4), 'any other offense * * * committed during the commission of or in connection with the servitude, peonage, or slave trade offense' means any conduct that constitutes an offense under federal, state, or local law (other than an offense that is itself covered under Chapter Two, Part H, Subpart 4). See the Commentary in § 2H1.1 for an explanation of how to treat a count of conviction which sets forth more than one ''other'' offense.

2. Definitions of 'serious bodily injury' and 'permanent or life-threatening bodily injury' are found in the Commentary to § 1B1.1 (Application Instructions).

3. 'A dangerous weapon was used' means that a firearm was discharged, or a 'firearm' or 'dangerous weapon' was 'otherwise used'' (as defined in the Commentary to § 1B1.1 (Application Instructions)).

4. If the offense involved the holding of more than 10 victims in a condition of involuntary servitude or peonage, an upward departure may be warranted.

Background: This section covers statutes that prohibit peonage, involuntary servitude, and slave trade. For purposes of deterrence and just punishment, the minimum base offense level is [18–24].''.

Issue for Comment: Section 218 of the Illegal Immigration Reform and Immigrant Responsibility Act of 1996 directs the Commission to ensure that the guidelines reflect the general appropriateness of enhanced sentences for defendants whose peonage, involuntary servitude, or slave trade offenses involve a large number of victims. The Commission seeks comment on whether the current enhancements provided under the guidelines' multiple count provisions are sufficient to ensure appropriately enhanced sentences when peonage, involuntary servitude, or slave trade offenses involve a large number of victims or whether a new specific offense characteristic for a large number of victims is needed.

Non-Emergency Amendments

Section 3A1.4 Terrorism

5. Synopsis of Proposed Amendment: This amendment proposes to make permanent the emergency amendment promulgated by the Commission to implement section 730 of the Antiterrorism and Effective Death Penalty Act of 1996 (Pub. L. 104–132; 110 Stat. 1214). That section gave the Commission emergency authority, under section 21(a) of the Sentencing Act of 1987, to amend the sentencing guidelines so that the Chapter 3 adjustment in § 3A1.4, relating to international terrorism, applies more broadly to Federal crimes of terrorism, as defined in section 2332b(g) of title 18, United States Code. By vote of the Commission, the emergency amendment became effective November 1, 1996. However, under the terms of section 21(a) of the Sentencing Act of 1987, the emergency amendment will no longer be in effect after submission of the next report to Congress under 28 U.S.C. § 994(p) unless in the next report, the Commission submits (and Congress does not disapprove) an amendment to make it permanent.

Proposed Amendment: Section 3A1.4 is amended in the title by deleting ''International''.

Section 3A1.4(a) is amended by deleting ''international'' and inserting in lieu thereof ''a federal crime of''.

The Commentary to § 3A1.4 captioned ''Application Notes'' is amended in Note 1 in the first sentence by deleting ''international'' and inserting in lieu thereof ''a federal crime of''; and in the second sentence by deleting ''International'' and inserting in lieu thereof ''Federal crime of''; and by deleting ''2331'' and inserting in lieu thereof ''2332b(g)''.

Section 1B1.1 Application Instructions

6. Synopsis of Proposed Amendment: This is a two-part amendment to § 1B1.1 (Application Instructions). First, the amendment corrects a technical error in § 1B1.1(b). Second, the amendment expands the definition of ''offense'' to specify what is meant by the term ''instant offense.'' This term is used to distinguish the current or ''instant'' offense from prior criminal offenses. Currently, this term is not defined and has repeatedly raised questions about its application. This amendment defines this term to mean the offense of conviction and relevant conduct, unless a different meaning is expressly stated or is otherwise clear from the context.

Two conforming amendments are necessary. The first conforming amendment adds commentary defining the term ''instant offense'' in relation to § 3C1.1. Section 3C1.1 requires more extensive commentary regarding this term because of the variety of situations covered by this guideline. The second conforming amendment makes explicit that, with respect to §§ 4B1.1 and 4B1.2, the ''instant offense'' is the offense of conviction. Currently, § 4B1.1 expressly states this in subdivision (2), but not in subdivision (1).

Proposed Amendment: Section 1B1.1(b) is amended by inserting '', cross references, and special instructions'' immediately following ''characteristics''.

The Commentary to § 1B1.1 captioned ''Application Notes'' is amended in Note 1(l) by inserting as the second sentence ''The term 'instant' is used in connection with 'offense' when, in the context, it is necessary to distinguish the current or 'instant' offense from prior criminal offenses.''.

The Commentary to § 3C1.1 captioned ''Application Notes'' is amended by inserting the following additional note at the end:

''8. 'During the investigation or prosecution of the instant offense' means during, and in relation to, the investigation or prosecution of the federal offense of which the defendant is convicted and any offense or related civil violation, committed by the defendant or another person, that was part of the same investigation or prosecution, whether or not such offense resulted in conviction or such violation resulted in the imposition of civil penalties. It is not necessary that the obstructive conduct pertain to the particular count of which the defendant was convicted.

'During the sentencing of the instant offense' means during, and in relation to, the sentencing phase of the process, including the preparation of the presentence report.''.

Section 4B1.1 is amended by deleting ''of the instant offense'' and inserting in lieu thereof ''the defendant committed the instant offense of conviction''.

Section 4B1.2(3) is amended by inserting ''of conviction'' immediately before ''subsequent''.

Section 1B1.2 Applicable Guidelines

7. Synopsis of Proposed Amendment: This amendment amends § 1B1.2 (Applicable Guidelines) and the Statutory Index to clarify that, except as otherwise provided in the Introduction to the Statutory Index, the Statutory Index will specify the Chapter Two offense guideline most applicable to an offense of conviction.

Proposed Amendment: The Commentary to § 1B1.2 captioned ''Application Notes'' is amended in Note 1 by deleting ''The Statutory Index (Appendix A) provides a listing to assist in this determination.'' and inserting in lieu thereof ''Except as otherwise provided in the Introduction to the Statutory Index, the Statutory Index specifies the offense guideline section(s) in Chapter Two most applicable to the offense of conviction.''; by inserting ''in the Statutory Index'' immediately following ''referenced''; by inserting ''more than one offense guideline section may be referenced in the Statutory Index for that particular statute and'' immediately following ''offense guidelines,''; by inserting ''of the referenced'' immediately following ''determine which''; and by deleting ''section'' immediately before ''applies'' and inserting in lieu thereof ''sections''.

The Introduction to Appendix A is amended in the first paragraph by inserting ''Therefore, as a general rule, when determining the guideline section from Chapter Two most applicable to the offense of conviction for purposes of § 1B1.1, use the guideline referenced for that statute in this index.'' after the first sentence; deleting ''If, in an atypical case, the guideline section indicated for the statute of conviction is inappropriate because of the particular conduct involved, use the guideline section most applicable to the nature of the offense conduct charged in the count of which the defendant was convicted. (See § 1B1.2.)''; and by inserting ''referenced'' immediately before ''for the substantive''.

The Introduction to Appendix A (Statutory Index) is amended by moving the second paragraph to the end of the first paragraph.

The Introduction to Appendix A (Statutory Index) is amended by deleting the second (formerly the third) paragraph as follows:

''For those offenses not listed in this index, the most analogous guideline is to be applied. (See § 2X5.1.)''.,

And inserting in lieu thereof:

''However, there are exceptions to the general rule set forth above. If the statute of conviction (1) is not listed in this index; or (2) is listed in this index but the guideline section referenced for that statute is no longer appropriate to cover the offense conduct charged because of changes in law not yet reflected in this index, use the most analogous guideline. (See § 2X5.1.)''.

Section 1B1.3 Relevant Conduct

8. Synopsis of Proposed Amendment: This amendment incorporates into § 1B1.3 (Relevant Conduct) the holding in United States v. Hill, 79 F.3d 1477 (6th Cir. 1996), that when two controlled substance transactions are conducted more than one year apart, the fact that the same controlled substance was involved in both transactions is insufficient, without more, to demonstrate that the transactions were part of the ''same course of conduct'' or ''common scheme or plan''.

Proposed Amendment: The Commentary to § 1B1.3 captioned ''Application Notes'' is amended in Note 9(B) by deleting ''For example, where'' and inserting in lieu thereof ''If''; and by inserting after the fourth sentence ''For example, if two controlled substance transactions are conducted more than one year apart, the fact that the transactions involved the same controlled substance, without more information, is insufficient to show that they are part of the same course of conduct or common scheme or plan.'' after the fourth sentence.

9. Synopsis of Proposed Amendment: This amendment addresses the issue of whether acquitted conduct may be considered for sentencing purposes. Option 1 of this amendment excludes the use of acquitted conduct as a basis for determining the guideline range. Option 1 has two suboptions, either or both of which could be added. Option 1(A) adds the bracketed language, in the guideline and application note, providing that acquitted conduct shall be considered if established independently of evidence admitted at trial. Option 1(B) invites the use of acquitted conduct as a basis for upward departure.

Option 2 is derived from a ''compromise'' proposal suggested several years ago by the Commission's Practitioners' Advisory Group. It excludes acquitted conduct from consideration in determining the guideline range unless such conduct is established by the ''clear and convincing'' standard, rather than the less exacting ''preponderance of the evidence'' standard generally applicable to the determination of relevant conduct.

Option 3 expressly provides what currently is arguably implicit in the Relevant Conduct guideline: that acquitted conduct should be evaluated using the same standards as any other form of unconvicted conduct and included in determining the guideline range if those standards are met. However, the amended commentary invites a discretionary downward departure to exclude such conduct if the use of that conduct to enhance the sentence raises substantial concerns of fundamental fairness. It also states what should be the obvious appropriate floor for such a downward departure.

Proposed Amendment: [Option 1A: Section 1B1.3 is amended by inserting the following new subsection:

''(c) Acquitted conduct, i.e., conduct necessarily rejected by the trier of fact in finding the defendant not guilty of a charge, shall not be considered relevant conduct under this section unless it is independently established by evidence not admitted at trial.''.

The Commentary to § 1B1.3 captioned ''Application Notes'' is amended by renumbering Note 10 as Note 11 and by inserting the following as new Note 10:

''10. Subsection (c) provides that conduct (i.e., acts and omissions) of

which the defendant has been acquitted after trial ordinarily shall not be considered in determining the guideline range. In applying this provision, the court should be mindful that evidence not admissible at trial properly may be considered at sentencing and that application of the guidelines often may involve determinations somewhat different from those necessary for conviction of an offense. For example, the factors necessary to establish the enhancement in § 2D1.1(b)(1) for possession of a weapon in a controlled substance offense are different from the elements necessary to find a defendant guilty of using or carrying a firearm in connection with that offense, in violation of 18 U.S.C. § 924(c); therefore, an acquittal of that offense would not necessarily foreclose the application of the weapon enhancement. Moreover, even if the defendant is acquitted of a charge under 18 U.S.C. § 924(c), the weapon enhancement in § 2D1.1(b)(1) may apply if, for example, another person possessed a weapon as part of jointly undertaken criminal activity with the defendant and the possession of the weapon was reasonably foreseeable.''.]

[Option 1B: Section 1B1.3 is amended by inserting the following new subsection:

''(c) Acquitted conduct, i.e., conduct necessarily rejected by the trier of fact in finding the defendant not guilty of a charge, shall not be considered relevant conduct under this section.''.

The Commentary to § 1B1.3 captioned ''Application Notes'' is amended by renumbering Note 10 as Note 11 and by inserting the following as new Note 10:

''10. Subsection (c) provides that conduct (i.e., acts and omissions) of which the defendant has been acquitted after trial shall not be considered in determining the guideline range. In applying this provision, the court should be mindful that application of the guidelines often may involve determinations somewhat different from those necessary for conviction of an offense. For example, the factors necessary to establish the enhancement in § 2D1.1(b)(1) for possession of a weapon in a controlled substance offense are different from the elements necessary to find a defendant guilty of using or carrying a firearm in connection with that offense, in violation of 18 U.S.C. § 924(c); therefore, an acquittal of that offense would not necessarily foreclose the application of the weapon enhancement.

Moreover, even if the defendant is acquitted of a charge under 18 U.S.C. § 924(c), the weapon enhancement in § 2D1.1(b)(1) may apply if, for example, another person possessed a weapon as part of jointly undertaken criminal activity with the defendant and the possession of the weapon was reasonably foreseeable. Although acquitted conduct may not be used in determining the guideline range, such conduct may provide a basis for an upward departure.''.]

[Option 2

Section 1B1.3 is amended by inserting the following new subsection:

''(c) Acquitted conduct, i.e., conduct necessarily rejected by the trier of fact in finding the defendant not guilty of a charge, shall not be considered relevant conduct under this section unless such conduct is established by clear and convincing evidence.''.

The Commentary to § 1B1.3 captioned ''Application Notes'' is amended by renumbering Note 10 as Note 11 and by inserting the following as new Note 10:

''10. Subsection (c) provides that conduct (i.e., acts and omissions) of which the defendant has been acquitted after trial shall not be considered in determining the guideline range unless, considering the evidence admitted at trial and any additional evidence presented at sentencing, such conduct is established by clear and convincing proof.

In determining whether conduct necessarily was rejected by an acquittal, the court should be mindful that application of the guidelines often may involve determinations different from those necessary for conviction of an offense. For example, the factors necessary to establish the enhancement in § 2D1.1(b)(1) for possession of a weapon in a controlled substance offense are different from the elements necessary to find a defendant guilty of using or carrying a firearm in connection with that offense, in violation of 18 U.S.C. § 924(c); therefore, an acquittal of that offense would not necessarily foreclose the application of the weapon enhancement. Moreover, even if the defendant is acquitted of a charge under 18 U.S.C. § 924(c), the weapon enhancement in § 2D1.1(b)(1) may apply if, for example, another person possessed a weapon as part of jointly undertaken criminal activity with the defendant and the possession of the weapon was reasonably foreseeable.''.]

[Option 3

The Commentary to § 1B1.3 captioned ''Application Notes'' is amended by renumbering Note 10 as Note 11 and by inserting the following note as new Note 10:

''10. Acquitted conduct, i.e., conduct necessarily rejected by the trier of fact in finding the defendant not guilty of a charge, shall be considered under this section if it otherwise qualifies as relevant conduct within the meaning of this section. However, if the court determines that, considering the totality of circumstances, the use of such conduct as a sentencing enhancement raises substantial concerns of fundamental fairness, a downward departure may be considered. Such a downward departure should not result, in the absence of other appropriate factors, in a sentence lower than the minimum sentence in the guideline range that would apply if such conduct were not considered.''.]

Section 1B1.5 Interpretation of References to Other Offense Guidelines

10. Synopsis of Proposed Amendment: This amendment simplifies the operation of Chapter Two cross references in two ways: (1) by amending § 1B1.5 (Interpretation of References to Other Offense Guidelines) to provide that only Chapter Two offense levels (not Chapter Two offense levels and Chapter Three adjustments) must be considered in determining whether a cross reference will result in a greater offense level than that provided in the Chapter Two guideline that contains the cross reference provision; and, (2) by amending § 2X1.1 to replace the three-level reduction for certain offenses involving attempts, solicitation and, conspiracy with a downward departure provision (see accompanying memorandum). This amendment also corrects a technical error in Application Note 1 of § 1B1.5.

(1) Amendment of § 1B1.5—Approximately 32 guideline subsections involving numerous cross references contain a requirement that the cross reference applies only if it results in the greater offense level. Currently, to determine the ''greater offense level,'' a comparison is required taking into account both the Chapter Two offense levels and any applicable Chapter Three adjustments. The inclusion of the Chapter Three adjustments in the comparison significantly increases the complexity of this task.

This amendment simplifies the guidelines by restricting the comparison to the Chapter Two offense levels, unless a different procedure is expressly specified. The amendment, together with existing guideline language, provides a different procedure with respect to §§ 2C1.1, 2C1.7, 2E1.1, 2E1.2 because they are the only four offense guidelines in which the inclusion of Chapter Three adjustments in the comparison is likely to make a difference. Although it is possible that there may be a difference under some

other guideline section under some unusual circumstance, such differences will occur extremely rarely, if at all.

Sections 2E1.1 and 2E1.2 currently expressly provide for a comparison (of the offense level applicable to the underlying activity and the alternative base offense level) including Chapter Three adjustments. There may be cases, for example, in which abuse of a position of trust is accounted for in the offense level applicable to the underlying racketeering activity. If Chapter Three adjustments (including § 3B1.3 (Abuse of Position of Trust or Use of Special Skill)) are not included in the comparison, then abuse of a position of trust would be taken into account only in the offense level applicable to the underlying activity and not with respect to the alternative base offense level.

Likewise, §§ 2C1.1 and 2C1.7 currently do not expressly provide for a comparison including Chapter Three adjustments, although under current § 1B1.5 such a comparison is called for. Cases under §§ 2C1.1 and 2C1.7 would have a different result using a Chapter Two comparison versus a Chapter Two and Three comparison only where the Chapter Two offense level from § 2C1.1 or 2C1.7 was the same as that for the underlying offense, and a 2-level adjustment from § 3B1.3 would apply to the underlying offense (an adjustment from § 3B1.3 does not apply to an offense level from § 2C1.1 or § 2C1.7). In such case, a 2-level difference would result: that conduct would already be taken into account under §§ 2C1.1 and 2C1.7 but would not be taken into account in the comparison of the offense level from the underlying offense because the Chapter Three adjustment would not be included. However, such cases should occur relatively infrequently. In FY 1995, there were 220 cases sentenced under § 2C1.1 altogether and 26 cases sentenced under 2C1.7.

To address the cases described above, this amendment requires, as an express exception to the general rule provided for in the amendment, that the comparisons made in §§ 2C1.1, 2C1.7, 2E1.1, and 2E1.2 include Chapter Three adjustments. Application notes are added to §§ 2C1.1 and 2C1.7 expressly requiring a Chapter Three comparison (and the application notes in §§ 2E1.1 and 2E1.2 that require the same are retained), without any substantive change.

(2) Amendment of § 2X1.1—This amendment also proposes deletion of the three-level reduction under § 2X1.1(b) (1), (2), or (3), for attempts, conspiracies, or solicitations not covered by a specific offense guideline, in which the defendant has not completed all the acts necessary for the substantive offense and was not ''about to complete all such acts but for the apprehension or interruption by some similar event beyond the defendant's control.'' In place of the three-level reduction, this amendment provides for the possibility of a downward departure under such circumstances. The arguments for eliminating the provisions are: (1) A large number of cases that go to § 2X1.1 theoretically are required to be considered for the reduction, but only a small number qualify for it; (2) on its face the provision should be expected to apply rarely; and (3) the concerns manifested in the provisions can be dealt with adequately through departure. On the other hand, if the three-level reduction is replaced by a departure provision, in the rare case when the requirements for a reduction under subsection (b) are met, the defendant will not have a right to the reduction but must rely on the sentencing judge's exercise of the discretion to depart.

In FY 1995 there were 1,568 cases in which the highest guideline applied was § 2X1.1(a). Of these, 33 (or 2%) received the three-level reduction under subsection (b) (17 for attempt, 13 for conspiracy, and 3 for solicitation). The affirmance rate of appeals of these findings has been very high (90.5% in FY 1995, 85% in FY 1994, and 94.4% in FY 1993).

Proposed Amendment: Section § 1B1.5(d) is amended by deleting ''final offense level (i.e., the greater offense level taking into account the Chapter Two offense level and any applicable Chapter Three adjustments)'' and inserting in lieu thereof ''Chapter Two offense level, except as otherwise expressly provided''.

The Commentary to § 1B1.5 captioned ''Application Notes'' is amended in Note 1 by deleting '', (2),'' and inserting in lieu thereof ''and'' immediately after ''§ 2D1.2(a)(1)'' and by deleting ''and § 2H1.1(a)(1),''.

The Commentary to § 1B1.5 captioned ''Application Notes'' is amended in Note 2 by deleting in the second sentence ''greater final''; by deleting ''(i.e., the greater offense level''; by deleting ''both'' and inserting in lieu thereof ''only''; and by deleting ''and any applicable Chapter Three adjustments).''

The Commentary to § 1B1.5 captioned ''Application Notes'' is amended in Note 2 by deleting the second and third sentences and inserting the following in lieu thereof:

'', unless the offense guideline expressly provides for consideration of both the Chapter Two offense level and applicable Chapter Three adjustments. For situations in which a comparison involving both Chapters Two and Three is necessary, see the Commentary to §§ 2C1.1 (Offering, Giving, Soliciting, or Receiving a Bribe); 2C1.7 (Fraud Involving Deprivation of the Intangible Right to the Honest Services of Public Officials); 2E1.1 (Unlawful Conduct Relating to Racketeer Influenced and Corrupt Organizations); and 2E1.2 (Interstate or Foreign Travel or Transportation in Aid of Racketeering Enterprise).''.

The Commentary to § 2C1.1 captioned ''Application Notes'' is amended by inserting the following additional note:

7. For the purposes of determining whether to apply the cross references in this section, the ''resulting offense level'' means the greater final offense level (i.e., the offense level determined by taking into account both the Chapter Two offense level and any applicable adjustments from Chapter Three, Parts A–D).''.

The Commentary to § 2C1.7 captioned ''Application Notes'' is amended by inserting the following additional note:

''6. For the purposes of determining whether to apply the cross references in this section, the ''resulting offense level'' means the greater final offense level (i.e., the offense level determined by taking into account both the Chapter Two offense level and any applicable adjustments from Chapter Three, Parts A–D).''.

Section § 2X1.1 is amended by deleting subsection (b) in its entirety and redesignating subsection (c) as subsection (b).

The Commentary to § 2X1.1 captioned ''Application Notes'' is amended by deleting Note 4 in its entirety and inserting the following in lieu thereof:

''4. This guideline applies to attempts, solicitations, or conspiracies that are not covered by a specific offense guideline. In cases to which this guideline applies, a downward departure of up to three levels may be warranted if the defendant is arrested well before the defendant or any co-conspirator has completed the acts necessary for the substantive offense. A downward departure would not be appropriate under this section in cases in which the defendant or a co-conspirator completed all the acts such person believed necessary for successful completion of the substantive offense or the circumstances demonstrate that the person was about to complete all such acts but for apprehension or interruption by some similar event

beyond the person's control. A downward departure also would not be appropriate in cases involving solicitation if the statute treats solicitation of the substantive offense identically with the substantive offense, i.e., the offense level in such cases should be the same as that for the substantive offense.''.

The Commentary to § 2X1.1 captioned ''Background'' is deleted in its entirety.

The Commentary to § 1B1.3 captioned ''Application Notes'' is amended by deleting Note 7 in its entirety.

The Commentary to § 2A4.1 captioned ''Application Notes'' is amended in Note 5 by deleting '', subject to a possible 3-level reduction under § 2X1.1(b))''.

The Commentary to § 2F1.1 captioned ''Application Notes'' is amended by deleting Note 9 in its entirety.

Section 1B1.10 Retroactivity of Amended Guideline Range

11. Synopsis of Proposed Amendment: This amendment responds to recent litigation, including a circuit conflict and inquiries regarding the operation of § 1B1.10 and related statutory provisions.

The amendment clarifies Commission intent that the designation of an amendment for retroactive application to previously sentenced, imprisoned defendants authorizes only a reduction in the term of imprisonment pursuant to 18 U.S.C. § 3582(c)(2) (which, in turn, speaks only to modification of a term of imprisonment) and does not open any other components of the sentence (e.g., the term of supervised release) to modification. The amendment further clarifies that the amount of reduction in the prison sentence, subject to the constraints of the amended, reduced guideline range and the amount of time remaining to be served, is within the sound discretion of the court.

Proposed Amendment: Section 1B1.10 is amended in the title by deleting ''Retroactivity'' and inserting in lieu thereof ''Reduction in Term of Imprisonment as a Result''.

Section 1B1.10(b) is amended by deleting ''sentence'' the first time it appears and inserting in lieu thereof ''the term of imprisonment'', by deleting ''sentence'' the next time it appears and inserting in lieu thereof ''term of imprisonment'', and by inserting '', except that in no event may the reduced term of imprisonment be less than the term of imprisonment the defendant has already served'' immediately before the period at the end of the sentence.

The Commentary to § 1B1.10 captioned ''Application Notes'' is amended by inserting the following additional note at the end:

''3. The determination of whether to grant a reduction in a term of imprisonment under 18 U.S.C. § 3582(c)(2) and the amount of such reduction are within the sound discretion of the court, subject to the limitations in subsection (b).''.

The Commentary to § 1B1.10 captioned ''Background'' is amended in the third paragraph by inserting ''to determine an amended guideline range under subsection (b)'' immediately before the period at the end of the sentence; and by inserting the adding at the end the following new paragraph:

''The listing of an amendment in subsection (c) reflects policy determinations by the Commission that a reduced guideline range is sufficient to achieve the purposes of sentencing and that, in the sound discretion of the court, a reduction in the term of imprisonment may be appropriate for previously sentenced, qualified defendants. The authorization of such a discretionary reduction does not otherwise affect the lawfulness of a previously imposed sentence, does not authorize a reduction in any other component of the sentence, and does not entitle a defendant to a reduced term of imprisonment as a matter of right.''.

Section 2B1.1. Larceny, Embezzlement, and Other Forms of Theft; Receiving, Transporting, Transmitting, or Possessing Stolen Property

12. Synopsis of Proposed Amendment: (a) Source and Purpose—This amendment addresses a significant interpretive problem involving a specific offense characteristic in the Theft (§ 2B1.1) and Fraud (§ 2F1.1) guidelines. The problem occurs in connection with the specific offense characteristic under § 2B1.1(b)(6)(B) and § 2F1.1(b)(6)(B), which provides an enhancement of four levels (approximate 50 percent increase) and a floor offense level of 24 (51–63 months for a first offender), if the offense ''affected a financial institution and the defendant derived more than $1,000,000 in gross receipts from the offense.'' The proper interpretation of this language has been the subject of a number of hotline calls and some litigation (although no circuit conflict has yet resulted). Staff review of the Theft and Fraud guidelines has raised this matter for possible Commission attention.

(b) Number of affected cases—FY '95 monitoring data are unable to distinguish cases that received the similar enhancement for substantially jeopardizing the safety and soundness of a financial institution (under § 2B1.1(b)(6)(A) and § 2F1.1(b)(6)(A)) from this particular enhancement under paragraph (B). One or the other enhancement was applied in 37 (0.6%) of 6,019 fraud cases and 28 (0.9%) of 3,142 theft (§ 2B1.1) cases. This amendment could decrease the frequency with which this particular enhancement is given. The amendment proposes to delete the four-level enhancement in paragraph (B), while retaining the minimum offense level of 24 (because that is all the directive requires). This could affect as many as 27 of the fraud cases (i.e., 27 of the fraud cases received a 4-level enhancement while 10 were affected by the floor of 24) and 2 of the theft cases (i.e., 2 of the 28 cases received a 4-level enhancement while 26 were affected by the floor of 24).

(c) Scope of Amendment—This amendment would continue to apply the enhancement to a broader spectrum of cases than minimally required under the congressional directive. However, the commentary would state that the offense must be perpetrated against one or more financial institutions and the defendant's $1 million must be derived entirely from one or more financial institutions. The definition for ''gross receipts'' in the commentary would be amended to clarify that ''gross receipts from the offense'' includes property under the control of, or in the custody of, the financial institution for a second party, e.g., a depositor. The Background Commentary would also be amended to reflect the Commission's intent to implement the congressional directive more broadly.

Proposed Amendment: Section § 2B1.1(b)(6) is amended by deleting ''(A)''; by deleting ''; or'' immediately following ''institution'' and inserting in lieu thereof a '','' ; and by deleting subsection (B) in its entirety.

Section § 2B1.1 is amended by inserting the following additional subsection:

''(7) If (A) obtaining or retaining the gross receipts of one or more financial institutions was an object of the offense, (B) the defendant derived more than $1,000,000 in gross receipts from such institutions, and (C) the offense level as determined above is less than level 24, increase to level 24.''.

The Commentary to § 2B1.1 captioned ''Application Notes'' is amended in Note 11 by inserting at the beginning the following:

''For purposes of subsection (b)(7), 'gross receipts' means any moneys, funds, credits, assets, securities, or other real or personal property, whether tangible or intangible, owned by, or

under the custody or control of, a financial institution, that are obtained directly or indirectly as a result of such offense. See 18 U.S.C. §§ 982(a)(4), 1344.''.

The Commentary to § 2B1.1 captioned ''Application Notes'' is amended in Note 11 by deleting in the second sentence (formerly the first sentence) ''from the offense,''; by deleting ''(6)(B)'' immediately following ''(b)''; and by deleting ''generally'' immediately following ''(7),''.

The Commentary to § 2B1.1 captioned ''Application Notes'' is amended in Note 11 by deleting the third sentence (formerly the second sentence) in its entirety.

The Commentary to § 2B1.1 captioned ''Background'' is amended in the sixth paragraph by deleting ''Subsection'' and inserting in lieu thereof ''Subsections''; by deleting ''(A)'' immediately following ''(b)(6)'' and inserting in lieu thereof ''and (b)(7)''; by deleting ''implements'' and inserting in lieu thereof ''implement''; by deleting ''instruction'' and inserting in lieu thereof ''instructions''; and by inserting ''and section 2507 of Public Law 101–647, respectively'' immediately following ''101–73''.

Section 2F1.1(b)(6) is amended by deleting ''(A)''; by deleting ''; or'' immediately following ''institution'' and inserting in lieu thereof a ''.'' ; and by deleting (B) in its entirety.

Section 2F1.1(b) is amended by inserting the following additional subsection:

''(7) If (A) obtaining or retaining the gross receipts of one or more financial institutions was an object of the offense, (B) the defendant derived more than $1,000,000 in gross receipts from such institutions, and (C) the offense level as determined above is less than level 24, increase to level 24.''.

The Commentary to § 2F1.1 captioned ''Application Notes'' is amended in Note 16 by deleting in the first sentence ''from the offense,''; by deleting ''(6)(B)'' immediately following ''(b)''; and by deleting ''generally'' immediately following ''(7),''.

The Commentary to § 2F1.1 captioned ''Application Notes'' is amended in Note 16 by deleting the second sentence in its entirety.

The Commentary to § 2F1.1 captioned ''Application Notes'' is amended in Note 16 by inserting at the beginning the following:

''For purposes of subsection (b)(7), 'gross receipts' means any moneys, funds, credits, assets, securities, or other real or personal property, whether tangible or intangible, owned by, or under the custody or control of, a financial institution, that are obtained directly or indirectly as a result of such offense. See 18 U.S.C. §§ 982(a)(4), 1344.''.

The Commentary to § 2F1.1 captioned ''Background'' is amended in the seventh paragraph by deleting ''Subsection'' and inserting in lieu thereof ''Subsections'';

By deleting ''(A)'' immediately following ''(b)(6)'' and inserting in lieu thereof ''and (b)(7)'';

By deleting ''implements'' and inserting in lieu thereof ''implement'';

By deleting ''instruction'' and inserting in lieu thereof ''instructions'';

And by inserting ''and section 2507 of Public Law 101–647, respectively'' immediately following ''101–73''.

Section 5A1.1 Sentencing Table

13. Synopsis of Proposed Amendment: This is a two-part amendment. First, this amendment incorporates the Sentencing Table into a new guideline at § 5A1.1, in response to questions about the legal status of the Sentencing Table. By incorporating the Sentencing Table into a guideline, this amendment also uses a construct for the Sentencing Table that is consistent with the construct used for other tables in the Guidelines Manual, such as the Drug Quantity Table in § 2D1.1.

Second, this amendment addresses an arguably unwarranted ''cliff'' in the Sentencing Table between offense levels 42 and 43. Under the current table, offense level 42 prescribes guideline ranges of 360 months to life imprisonment for each criminal history category. Offense level 43, in comparison, prescribes a guideline sentence of life for each criminal history category.

There is evidence that the Commission initially intended to preserve level 43 and its resulting life sentence requirement for the most egregious law violators; i.e., those convicted of first degree murder, including felony murder, and treason. Note, for example, the wording of Application Note 1 to § 2A1.1: ''The Commission has concluded that in the absence of capital punishment life imprisonment is the appropriate punishment for premeditated killing.'' However, in providing for a sentencing table with a continuous series of offense levels, the Commission actually made it possible for those most serious categories of criminals to be subject to offense levels less than 43 (and, hence, to guideline ranges that do not require a life sentence), if mitigating guideline adjustments apply. Conversely, the continuous nature of the Sentencing Table also can result in defendants who commit less inherently serious crimes; i.e., those carrying base offense levels less than 43, receiving an offense level of 43 (and, hence, a required life sentence) as a result of applicable aggravating guideline adjustments (e.g., aggravating role, weapon enhancement). Prior to a 1994 amendment reducing the quantity-based offense level in the drug table from 42 to 38, this latter situation occurred more frequently than it occurs now.

Nevertheless, in those infrequent cases, when a defendant whose base offense level is less than 43 becomes subject to guideline enhancements that result in a final, adjusted offense level of 43 or more, a ''mandatory'' guideline sentence of life imprisonment may not be warranted. In the last several years, a number of judges have written or called the Commission to express concern about what they see as an anomalous, unwarranted ''cliff'' between level 42 (range of 360 months to life) and level 43 (life), particularly in the case of a very young defendant who has a remaining life expectancy exceeding 30 years. Those who have contacted the Commission about this sentencing table phenomenon have pointed out that, for younger defendants, there may be a definite qualitative as well as a quantitative difference between a sentence of 30 or more years and a non-parolable sentence of life. In some of these cases, the applicability of a guideline enhancement of one or two offense levels can turn a very lengthy, deserved sentence into a life sentence that may not be warranted and, according to some who have commented, may even raise Eighth Amendment concerns.

The second part of this amendment addresses this concern by making level 42 the offense level upper limit in the sentencing table, unless the defendant was subject to an offense level of 43 as a result of the application of § 2A1.1 (First Degree Murder), § 2M1.1 (Treason), or other guideline provision that elevates the offense level to level 43 because of the death of a person. In such cases, level 43 and its associated life sentence would continue to apply. This approach preserves level 43 for the most egregious cases while providing a range of 360 months to life for all other cases that reach level 42 through guideline enhancements.

This amendment can be expected to affect a relatively small number (perhaps 30–40) of cases, based on FY 1995 monitoring data. In FY 1995, 80 defendants received a final offense level of 43. Of these, 28 would not be affected because level 43 was received via § 2A1.1 (First Degree Murder); (there

were no § 2M1.1 (Treason) cases.) Of the 52 remaining defendants at final offense level 43, 34 received a life sentence. The amendment could be expected to impact approximately this number of defendants, some of whom might still receive a life sentence because the judge elected to impose it.

Proposed Amendment: The Commentary to § 2A1.1 captioned ''Application Notes'' is amended in Note 1 by deleting ''life imprisonment is the appropriate punishment for premeditated killing'' and inserting in lieu thereof ''a defendant who commits premeditated murder should be sentenced at the highest offense level under the Sentencing Table (subject to any applicable adjustments from Chapter Three)'' ; and by deleting the second, third, and fourth sentences.

Chapter Five—Determining the Sentence is amended in Part A—Sentencing Table by deleting ''The Sentencing Table used to determine the guideline range follows:'' and inserting in lieu thereof:

''§ 5A1.1 Sentencing Table

(a) The Sentencing Table used to determined the guideline range is set forth in subsection (b).''.

Chapter Five—Determining the Sentence is amended in Part A—Sentencing Table by inserting ''(b)'' in the title of the Sentencing Table.

The Commentary to Sentencing Table is amended in Note 2 by deleting ''An offense level of more than 43 is to be treated as an offense level of 43.'' and inserting the following in lieu thereof:

''A total offense level of more than 42 is to be treated as an offense level of 42. However, if the final offense level is 43 or more as a result of the application of § 2A1.1 (First Degree Murder), § 2M1.1 (Treason), or another guideline provision (including a cross reference to § 2A1.1) that increases the offense level to level 43 because the offense involved first degree murder or resulted in death, the offense level is to be treated as an offense level of 43.''.

Section 2B3.1 Robbery

14. Synopsis of Proposed Amendment: (a) Source and Purpose—This amendment addresses a split among the circuit courts regarding the application of the ''express threat of death'' enhancement in § 2B3.1 (Robbery).

The majority, relying on the Commission's discussion in Application Note 6, holds that the enhancement applies when the combination of the defendant's actions and words would instill in a reasonable person in the position of the immediate victim (e.g., a bank teller) a greater amount of fear than necessary to commit the bank robbery. Pursuant to this approach, the enhancement applies even when the defendant's statement does not indicate distinctly an intent to kill the victim; it is sufficient that the victim infers from the defendant's conduct that a threat of death was made. See United States v. Robinson, 86 F.3d 1197, 1202 (D.C. Cir. 1996) (enhancement applies if (1) a reasonable person in the position of the immediate victim would very likely believe the defendant made a threat and the threat was to kill; and (2) the victim likely thought his life was in peril); United States v. Murray, 65 F.3d 1161, 1167 (4th Cir. 1995) (''any combination of statements, gestures, or actions that would put an ordinary victim in reasonable fear for his or her life is an express threat of death''); United States v. France, 57 F.3d 865, 868 (9th Cir. 1995) (''[a]n express threat need not be specific in order to instill the requisite level of fear in a reasonable person''); United States v. Hunn, 24 F.3d 994 (7th Cir. 1994) (combination of defendant's note and his gesture that he was pointing a gun through his pocket at the teller would be understood by a reasonable victim as a death threat); United States v. Bell, 12 F.3d 139 (8th Cir. 1993) (upholding enhancement based on demand note's statement ''Make any sudden moves alert anyone I'll pull the pistol in this purse and the shooting will start!''); United States v. Smith, 973 F.2d 1374, 1378 (8th Cir. 1992) (combination of threatening statements to teller and gesture that defendant had a gun instilled greater fear than necessary to commit the robbery).

The minority holds that only what the defendant does or says, not what the victim infers, should be used to assess whether an express threat of death was made within the meaning of the robbery guideline. United States v. Alexander, 88 F.3d 427, 431 (6th Cir. 1996) (''a defendant's statement must distinctly and directly indicate that the defendant intends to kill or otherwise cause the death of the victim''); United States v. Tuck, 964 F.2d 1079 (11th Cir. 1992) (same); see also United States v. Hunn, 24 F.3d at 999–1000 (Easterbrook, J., dissenting). The Sixth Circuit also held that the commentary examples and the Commission's underlying intent at Application Note 6 are not controlling because they are inconsistent with the plain meaning of ''express'' in § 2B3.1(b)(2)(F). United States v. Alexander, 88 F.3d at 431 (referring to Stinson v. United States, 508 U.S. 36 (1993)).

(b) Policy Considerations—The major policy consideration is how strictly the Commission intends for the threat of death enhancement to apply; i.e., must the defendant explicitly threaten death in order for the enhancement to apply.

(c) Number of Affected Cases—In FY 1995, the enhancement is applied in 169 out of 1,488 cases (or 11.4% of the cases) sentenced under the robbery guideline.

(d) Amendment Options—This amendment adopts the majority view and clarifies the Commission's intent to enhance offense levels for defendants whose intimidation of the victim exceeds that amount necessary to constitute an element of a robbery offense. The amendment deletes the reference to ''express'' in § 2B3.1(b)(2)(F) and provides for a two-level enhancement ''if a threat of death was made''.

Proposed Amendment: Section § 2B3.1(b)(2)(F) is amended by deleting ''an express'' and inserting in lieu thereof ''a''.

Option 1:

The Commentary to § 2B3.1 captioned ''Application Notes'' is amended in Note 6 by deleting ''An express'' and inserting in lieu thereof ''A '' '';

By deleting the second sentence in its entirety and inserting in lieu thereof ''Accordingly, the defendant does not have to state expressly his intent to kill the victim in order for the enhancement to apply.'';

And by deleting in the third sentence ''the underlying'' and inserting in lieu thereof ''this''.

Option 2:

The Commentary to § 2B3.1 captioned ''Application Notes'' is amended in Note 6 by deleting ''An express'' and inserting in lieu thereof ''A '' '';

By deleting the second sentence in its entirety and inserting in lieu thereof ''Accordingly, the defendant does not have to state expressly his intent to kill the victim in order for the enhancement to apply.'';

By deleting in the third sentence ''the underlying'' and inserting in lieu thereof ''this''; and by deleting ''significantly greater fear than that necessary to constitute an element of the offense of robbery'' and inserting in lieu thereof ''a fear of death''.

15. Synopsis of Proposed Amendment: This amendment addresses the Carjacking Correction Act of 1996, Pub.L. 104–217; 110 Stat. 3020. Section 2 of that Act amends 18 U.S.C. § 2119(2), which (A) makes it unlawful to take a motor vehicle by force and violence or by intimidation, with intent to cause death or serious bodily harm, and (B) provides for a term of

imprisonment of not more than 25 years if serious bodily injury results. As amended by the Carjacking Correction Act of 1996, 18 U.S.C. § 2119(2) includes aggravated sexual abuse under 18 U.S.C. § 2241 and sexual abuse under 18 U.S.C. § 2242 within the meaning of ''serious bodily injury''. Therefore, a defendant will be subject to the 25-year statutory maximum under 18 U.S.C. § 2119(2) if the defendant commits a carjacking and rapes the carjacking victim during the carjacking.

In addition, this amendment amends § 2B3.1(b)(1) to provide cumulative enhancements if the offense involved bank robbery and carjacking. Currently, § 2B3.1 provides a 2-level enhancement either for bank robbery or for carjacking; it does not provide separate enhancements for those factors.

Two options are presented. Option 1 is a fairly narrow response to the Act. It amends Application Note 1 of § 2B3.1 (Robbery, Extortion, and Blackmail), the guideline which covers carjacking offenses under 18 U.S.C. § 2119 (and only that guideline) to provide that ''serious bodily injury'' includes aggravated sexual abuse under 18 U.S.C. § 2241 and sexual abuse under 18 U.S.C. § 2242.

Option 2 is a broader response to the Act. It expands the definition of ''serious bodily injury'' under § 1B1.1. Option 2 makes this broader definition generally applicable to Chapter Two offense guidelines which contain a ''serious bodily injury'' enhancement. The sexual abuse guideline, § 2A3.1, in turn is amended to make clear that, for purposes of that guideline, the ''serious bodily injury'' enhancement covers conduct other than aggravated sexual abuse and sexual abuse, which are inherent in the conduct covered by that guideline.

Option 2 also clarifies the guideline definition of serious bodily injury by inserting the word ''protracted'' immediately preceding the word ''impairment''. Statutes defining serious bodily injury consistently use the term ''protracted'' before ''impairment'' (e.g., 18 U.S.C. §§ 831, 1365, 1864; 21 U.S.C. § 802). Without use of the term ''protracted'', even a temporary impairment such as a ''sprained wrist'' would fall within the definition of serious bodily injury, as would the throwing of sand or pepper in someone's face to temporarily impair vision. Finally, Option 2 removes two sentences of commentary that are unhelpful.

[Option 1

Section 2B3.1(b)(1) is amended by deleting ''(A)'' immediately following ''If'', and by deleting ''or (B) the offense involved carjacking,''.

Section 2B3.1 is amended by renumbering subdivisions (5) and (6) as subdivisions (6) and (7) respectively and inserting the following as a new subdivision (5):

''(5) If the offense involved carjacking, increase by 2 levels.''.

Section 2B3.1 captioned ''Application Notes'' is amended in Note 1 by inserting ''For purposes of this guideline—'' immediately before ''Firearm,'' and inserting ''In addition, 'serious bodily injury—' includes conduct constituting criminal sexual abuse under 18 U.S.C. § 2241 or § 2242 or any similar offense under state law.'' immediately after ''Instructions).''.

[Option 2

The Commentary to § 1B1.1 captioned ''Application Notes'' is amended in Note 1(b) by deleting ''As used in the guidelines, the definition of this term is somewhat different than that used in various statutes.''.

The Commentary to § 1B1.1 captioned ''Application Notes'' is amended in Note 1(j) by inserting ''protracted'' immediately before ''impairment''; and by deleting ''As used in the guidelines, the definition of this term is somewhat different than that used in various statutes.'' and inserting in lieu thereof '' 'Serious bodily injury' includes conduct constituting criminal sexual abuse under 18 U.S.C. § 2241 or § 2242 or any similar offense under state law.''.

The Commentary to § 2A3.1 captioned ''Application Notes'' is amended in Note 1 by inserting ''For purposes of this guideline'' immediately before '''Permanent''; and by inserting the following as the last sentence:

''However, for purposes of this guideline, 'serious bodily injury' means conduct other than criminal sexual abuse, which already is taken into account in the base offense level under subsection (a).''.

The Commentary to § 2A3.1 captioned ''Application Notes'' is amended in Note 1 by inserting the following as the last paragraph:

''The means set forth in 18 U.S.C. § 2241 (a) or (b)'' are: by using force against the victim; by threatening or placing the victim in fear that any person will be subject to death, serious bodily injury, or kidnapping; by rendering the victim unconscious; or by administering by force or threat of force, or without the knowledge or permission of the victim, a drug, intoxicant, or other similar substance and thereby substantially impairing the ability of the victim to appraise or control conduct. This provision would apply, for example, where any dangerous weapon was used, brandished, or displayed to intimidate the victim.''.

The Commentary to § 2A3.1 captioned ''Application Notes'' is amended by deleting Note 2 in its entirety; and by renumbering Notes 3–7 as Notes 2–6 respectively.

Section 2B3.1(b)(1) is amended by deleting ''(A)'' immediately after ''If''; by deleting ''or (B) the offense involved carjacking,'' immediately before ''increase''.

Section 2B3.1(b) is amended by renumbering subdivisions (5) and (6) as subdivisions (6) and (7) respectively, and by inserting the following as a new subdivision (5):

''(5) If the offense involved carjacking, increase by 2 levels.''.

Section 2B5.1 Offenses Involving Counterfeit Bearer Obligations of the United States

16. Synopsis of Proposed Amendment: This is a three-part amendment. First, this amendment addresses section 807(h) of the Antiterrorism and Effective Death Penalty Act of 1996. That section requires the Commission to amend the sentencing guidelines to provide an appropriate enhancement for a defendant convicted of an international counterfeiting offense under 18 U.S.C.§ 470. The amendment adds a specific offense characteristic in § 2B5.1 (Offenses Involving Counterfeit Bearer Obligations of the United States) to provide a two-level enhancement if the offense occurred outside the United States.

Second, this amendment moves the coverage of offenses involving altered bearer instruments of the United States from § 2F1.1 (Fraud and Deceit; Forgery; Offenses Involving Altered or Counterfeit Instruments Other than Counterfeit Bearer Obligations of the United States) to § 2B5.1 (Offenses Involving Counterfeit Bearer Obligations of the United States). Currently, § 2B5.1 covers counterfeit bearer obligations of the United States. Section 2F1.1 covers altered bearer obligations of the United States. The offense level in § 2B5.1 is one-level higher than sophisticated fraud (i.e., fraud and more than minimal planning) under § 2F1.1 throughout the range of loss values. There are two reasons for moving offenses involving altered bearer instruments of the United States from § 2F1.1 to § 2B5.1: (A) theoretical consistency, and (B) simplicity of guideline operation.

(A) Theoretical Consistency. The higher offense level for offenses involving counterfeit bearer obligations of the United States reflects the lower

level of scrutiny realistically possible in transactions involving currency and the absence of any requirement that the person passing the currency produce identification. Under this rationale, however, altered bearer obligations of the United States seem to belong with counterfeit bearer obligation of the United States, rather than with other counterfeit or altered instruments.

(B) Simplicity of Guideline Operation. As a practical matter, the distinction between an altered instrument and a counterfeit instrument is not always clear. For example, if a genuine one-dollar bill is bleached and a photocopy of a twenty-dollar bill made using the genuine note paper, is the resulting twenty-dollar bill a counterfeit bill or an altered bill? In one recent case, a defendant made photocopies of twenty-dollar bills, then cut out the presidential picture of genuine twenty-dollar bills and switched pictures (using the genuine picture with the photocopied bill and the photocopied picture with the otherwise genuine bill). Is the photocopied bill with the genuine presidential picture a counterfeit or an altered instrument? This amendment simplifies the guidelines by handling this conduct in the same offense guideline, thus avoiding any difference based upon such very fine distinctions.

Third, this amendment clarifies the operation of § 2B5.1 (Offenses Involving Counterfeit Bearer Obligations of the United States) in two respects to address issues raised in litigation. It deletes a phrase in Application Note 3 concerning photocopying a note that could lead to the inappropriate conclusion that an enhancement from subsection (b)(2) does not apply even to sophisticated copying of notes. It also adds an application note to provide expressly that items clearly not intended for circulation are not counted under subsection (b)(1).

Proposed Amendment: Section 2B5.1 is amended in the title by inserting ''or Altered'' immediately following ''Counterfeit''.

Section 2B5.1(b) (1) and (b)(2) are both amended by inserting ''or altered'' immediately following ''counterfeit''.

Section 2B5.1(b) is amended by inserting the following new subdivision at the end:

''(4) If the offense was committed outside the United States, increase by 2 levels.''.

The Commentary to § 2B5.1 captioned ''Statutory Provision'' is amended by deleting ''471'' and inserting in lieu thereof ''470''.

The Commentary to § 2B5.1 captioned ''Application Notes'' is amended by deleting Note 2, renumbering Note 1 as Note 2 and inserting the following as the new Note 1:

''1. For purposes of this guideline, ''United States'' means each of the fifty states, the District of Columbia, the Commonwealth of Puerto Rico, the Virgin Islands, Guam, the Northern Mariana Islands, and American Samoa.'';

In Note 2 (formerly Note 1) by inserting ''or altering'' immediately following ''counterfeiting'';

By renumbering Note 3 as Note 4 and inserting the following as the new Note 3:

''3. For the purposes of subsection (b)(1), do not count items that clearly were not intended for circulation (e.g., items that are so defective that they are unlikely to be accepted even if subjected to only minimal scrutiny). However, partially completed items that would have been completed but for the discovery of the offense should be counted for purposes of such subsection.'';

And in Note 4 (formerly Note 3) by deleting ''merely photocopy notes or otherwise''.

The Commentary to § 2B5.1 captioned ''Background'' is amended by inserting ''alters bearer obligations of the United States or'' immediately before ''produces''.

Section 2F1.1 is amended in the title by inserting ''Altered or'' immediately following ''than''.

Section 2D1.6 Use of Communication Facility in Committing Drug Offense

17. Synopsis of Proposed Amendment: This amendment clarifies the operation of §§ 2D1.6 (Use of Communication Facility in Committing Drug Offense; Attempt or Conspiracy), 2E1.1 (Unlawful Conduct Relating to Racketeer Influenced and Corrupt Organizations), 2E1.2 (Interstate or Foreign Travel or Transportation in Aid of a Racketeering Enterprise), and 2E1.3 (Violent Crimes in Aid of Racketeering Activity) in a manner consistent with the operation of § 1B1.2 (Applicable Guidelines) governing the selection of the offense guideline section. This amendment addresses a circuit conflict by specifying that the ''underlying offense'', for purposes of these guidelines, is determined on the basis of the conduct of which the defendant was convicted. Compare United States v. McCall, 915 F.2d 811 (2d Cir. 1990) with United States v. Carrozza, 4 F.3d 70 (1st Cir. 1993). In addition, this amendment deletes an application note from §§ 2E1.1, 2E1.2, and 2E1.3 that is unnecessary and is not included in other sections of the Guidelines Manual.

Proposed Amendment: The Commentary to § 2D1.6 captioned ''Application Notes'' is amended by deleting ''Note'' and inserting in lieu thereof ''Notes'', by renumbering Note 1 as Note 2, by inserting the following as new Note 1:

''1. 'Offense level applicable to the underlying offense'' means the offense level determined by using the offense guideline applicable to the controlled substance offense that the defendant was convicted of using a communication facility to commit, cause, or facilitate.''.

The Commentary to § 2E1.1 captioned ''Application Notes'' is amended in Note 1 by deleting ''Where there is more than one underlying offense'' and inserting in lieu thereof ''The 'offense level applicable to the underlying racketeering activity' under subsection (a)(2) means the offense level under the applicable offense guideline, as determined under the provisions of § 1B1.2 (Applicable Guidelines)(i.e., on the basis of the conduct of which the defendant was convicted). In the case of more than one underlying offense (for this determination, apply the provisions of Application Note 5 of the Commentary to § 1B1.2 as if in a conspiracy case)''; by inserting ''apply Chapter Three, Parts A, B, and C to subsection (a)(1), and'' immediately following ''level,'', by deleting ''both (a)(1) and'' and inserting in lieu thereof ''subsection''; by deleting Note 3, and by renumbering the remaining notes accordingly.

The Commentary to § 2E1.2 captioned ''Application Notes'' is amended in Note 1 by deleting ''Where there is more than one underlying offense'' and inserting in lieu thereof ''The 'offense level applicable to the underlying crime of violence or other unlawful activity' under subsection (a)(2) means the offense level under the applicable offense guideline, as determined under the provisions of § 1B1.2 (Applicable Guidelines) (i.e., on the basis of the conduct of which the defendant was convicted). In the case of more than one underlying offense (for this determination, apply the provisions of Application Note 5 of the Commentary to § 1B1.2 as if in a conspiracy case)'',

The Commentary to § 2E1.3 captioned ''Application Notes'' is amended by deleting ''Notes'' and inserting in lieu thereof ''Note''; in Note 1 by adding the following as the first sentence:

''The 'offense level applicable to the underlying crime or racketeering activity'' under subsection (a)(2) means the offense level under the applicable offense guideline, as determined under the provisions of § 1B1.2 (Applicable

Guidelines)(i.e., on the basis of the conduct of which the defendant was convicted).'';

And by deleting Note 2.

Fraud, Theft, and Tax Offenses

Chapter Two, Parts B, F, and T (Theft, Fraud, and Tax)

18. Synopsis of Proposed Amendment: This amendment makes the following changes to guideline §§ 2B1.1, 2F1.1, and 2T4.1: (1) Eliminates the more-than-minimal-planning enhancement in §§ 2B1.1 and 2F1.1 and other guidelines, and builds a corresponding increase into the loss tables, and creates a two-level enhancement like the one in § 2T4.1 for offenses involving ''sophisticated means''; (2) increases the base offense level of § 2B1.1 (the theft guideline) and revises the loss tables in §§ 2B1.1, 2F1.1, and 2T4.1 (theft, fraud, and tax offenses, respectively); (3) changes the current one-level increments in the loss tables in §§ 2B1.1, 2F1.1, and 2T4.1 (to two-level increments or a combination of one and two-level increments); (4) increases the severity of the loss tables in §§ 2B1.1, 2F1.1, and 2T4.1 at higher loss amounts; (5) adds telemarketing enhancements to §§ 2B1.1 and 2F1.1; (6) adds a cross reference in § 2F1.1 for offenses involving arson; and (7) makes conforming technical changes.

(1) Elimination of More-than-Minimal-Planning Enhancement for Sophisticated Means.

First, the amendment eliminates the specific offense characteristic for more-than-minimal planning from the theft and fraud guidelines (and a number of other guidelines), and phases in a corresponding increase in the loss tables (or, in the case of option 3, into the base offense level). Arguments for revising or eliminating the ''more than minimal planning'' specific offense characteristic include: (I) the workload (and related litigation) burden of the provision is considerable; in each of the over 9,000 cases sentenced under these guidelines, some consideration is given to whether this SOC is applicable; (ii) the definition of more than minimal planning is arguably unclear or ambiguous; (iii) past Commission studies have shown that the provision is applied unevenly, thus contributing to unwarranted disparity; and (iv) the adjustment is applied with such frequency, particularly at higher dollar amounts, that it arguably should be built into the loss table or even the base offense level. (The more-than-minimal planning adjustment is applied in 58.7% of all cases sentenced under § 2B1.1; of all cases under § 2F1.1, it is applied in 82.5% (and over 89% of cases involving loss amounts greater than $10,000)).

The amendment proposes creating a two-level specific offense characteristic in §§ 2B1.1 and 2F1.1 (and other guidelines that currently have a more-than-minimal planning enhancement) that would apply if ''sophisticated means'' were used to impede discovery of the existence or extent of the offense (with a floor of level 12). Replacing the more-than-minimal planning enhancement with one for sophisticated means will increase the fact-finding and application burden compared to just deleting the more-than-minimal planning enhancement. In addition, in the proposed loss table options at levels at or above the point where the two levels from more-than-minimal planning are automatically built into the loss table, defendants who would receive the new two-level enhancement for sophisticated means would effectively receive an additional two-level increase, in addition to any others provided in this amendment. It is unclear how many cases would be affected by this new enhancement. In conjunction with the addition of this enhancement, it is proposed that the current specific offense characteristic involving use of foreign bank accounts found at subsection (b)(5) (providing a floor of 12 for such offenses), be deleted and incorporated into the definition of ''sophisticated means'' for all guidelines that currently have a more-than-minimal planning enhancement. In FY 1995, of the 6,019 cases sentenced under § 2F1.1, 3 (.05%) received the enhancement for use of foreign bank accounts.

(2) Amendments to Loss Tables.

Three options are presented for changes to the loss tables for the theft and fraud guidelines. A corresponding change is proposed to the tax loss table in § 2T4.1 (for options 1 and 2; if option 3 is chosen, a conforming tax loss table will be prepared). Depending on the option chosen, the necessity of factual findings for the lowest loss amounts is eliminated by building these loss amounts into the base offense level.

Options 1 and 2 of this proposal provide identical base offense levels of 6 for the theft and fraud guidelines. Option 3 provides a base offense level of 8.

(3) Loss Tables—Two-level Increments.

Second, in options one and three the loss tables are changed from the current one-level increments to two-level increments, so that broader ranges of dollar loss are assigned to a particular offense level increase. Option two generally retains one-level increments, but provides two-level increments for losses above $2,000 and $5,000, and for loss increments above $5,000,000. Option two retains cutting points that are very similar to the current loss tables, but has no consistent pattern in the selection of the cutting points.

Several arguments suggest use of two-level increments in the loss tables, as proposed in Options One and Three: (i) Reduction in probation officer and judicial workload (broader loss ranges will produce fewer ''cutting points''; for example, a two-level loss table—with no other changes—would go from 18 to 10 cutting points); (ii) increased consistency with other offense guidelines (most alternative base offense levels and specific offense characteristics increase by at least two-level increments; for example, the drug table); and (iii) a table with two-level increments is less mechanistic and lessens the appearance of false precision compared to the current structure. On the other hand, one-level increments provide a smoother increase in levels relative to loss amounts, with a minimized ''cliff'' effect and somewhat greater proportionality.

(4) Loss Tables—Increased Severity at Higher Loss Amounts.

Fourth, all three options provide for increases in the severity levels assigned to the higher loss amounts, in addition to the increase built into the table (or base offense level) in response to the elimination of the more-than-minimal planning adjustment.

There are several reasons why consideration should be given to raising the severity levels for cases involving the largest loss amounts. First, the draft report of the Commission-sponsored ''just punishment'' study suggests that respondents identified certain kinds of cases that may warrant greater punishment for higher loss amounts than currently provided by the loss tables in the theft and fraud guidelines: embezzlement or theft cases involving bank officials or postal workers; fraudulent solicitation for a nonexistent charity; fraud involving false mortgage application with no intent to repay; and forgery or fraud involving stolen credit cards or writing bad checks.

Second, the draft results of the Federal Judicial Center survey of federal district court judges and chief probation officers reveal sentiment that §§ 2B1.1 and 2F1.1 under punish defendants whose offenses involve large monetary losses.

Third, the Department of Justice and the Criminal Law Committee of the Judicial Conference have recommended that consideration be given to raising the severity levels at higher loss

amounts for theft and fraud cases to more appropriately punish large-scale offenders.

(5) Telemarketing Enhancements.

The fifth change proposed by this amendment is to add specific offense characteristics to § 2F1.1 for offense conduct involving telemarketing. In the 1994 omnibus crime bill, Congress raised the statutory maximum for telemarketing offenses by five years (18 U.S.C. § 2326(1)), and by ten years for such offenses that victimized ten or more persons over age 55 or targeted persons over the age of 55 (18 U.S.C. § 2326(2)). This amendment provides a two-level increase in § 2F1.1 for offenses involving telemarketing, and an additional, cumulative 2-level increase if the offense victimized 10 or more persons over the age of 55, or targeted persons over the age of 55.

(6) Cross Reference—Arson.

The sixth change proposed by the amendment is to add to the fraud guideline a cross reference to § 2K1.4 (Arson, Property Damage by Use of Explosives), if the offense involved arson or property destruction by use of explosives, and if the resulting offense level is greater. Offenses that involve an underlying arson may be charged as frauds. The proposed cross reference better ensures that similar offenses are treated similarly.

(7) Conforming Technical Changes.

The amendment also makes the following technical changes: In § 2B1.1, subsection (b)(3) is proposed for deletion because the floor of 6 for offenses involving the theft of mail is unnecessary given the proposal to increase the base offense level for all offenses under this guideline from 4 to 6; in § 2B1.1, subsection (b)(4)(B) providing a four-level increase for offenses involving receiving stolen property is revised to provide a two-level increase because of the proposed deletion of more than minimal planning (i.e., the current, four-level enhancement is applied in the alternative to a two-level enhancement for more than minimal planning; if the more-than-minimal planning enhancement is subsumed in the loss tables, it is necessary to reduce the four-level enhancement for fencing stolen property to two levels to maintain equipoise). In § 2F1.1, subsection (b)(2)(B), providing an alternative (to the more-than-minimal-planning) two-level increase for a scheme involved the defrauding of more than one victim, is proposed for deletion because the concerns are handled by building the levels for more than minimal planning into the loss table; and the definition of more-than-minimal planning in § 1B1.1, comment. (n.1(f)), is proposed for deletion and replacement by the definition of ''sophisticated means'', with corresponding changes to §§ 2A2.1(b)(1), 2B1.1(b)(4)(A), 2B1.3(b)(3), and 2B2.1(b)(1). The definition of ''sophisticated means'' currently in § 2T1.1 is revised accordingly.

(A) Proposed Amendment

The Commentary to § 1B1.1 captioned ''Application Notes'' is amended by deleting application note 1(f) in its entirety and inserting in lieu thereof:

'' 'Sophisticated means to impede discovery of the offense or its extent,' includes conduct that is more complex or demonstrates greater intricacy or planning than a routine effort to impede discovery of the offense or its extent. An enhancement would be applied, for example where the defendant used transactions through corporate shells or fictitious entities, or used foreign bank accounts or transactions to conceal the nature or extent of the fraudulent conduct.''

* * * * *

Section 2B1.1(a) (Base Offense Level) is amended by deleting ''4'' and inserting in lieu thereof [Options 1 and 2: ''6''; Option 3: ''8'']. Section 2B1.1 is amended by deleting (b)(1) in its entirety, and inserting in lieu thereof, one of the following three options:

Option One

[''(b) Specific Offense Characteristics

(1) If the loss was $5,000 or more, increase the offense level as follows:

Loss (apply the greatest)	Increase in level
(A) $5,000 or more	Add 2.
(B) 10,000 or more	Add 4.
(C) 22,500 or more	Add 6.
(D) 50,000 or more	Add 8.
(E) 120,000 or more	Add 10.
(F) 275,000 or more	Add 12.
(G) 650,000 or more	Add 14.
(H) 1,500,000 or more	Add 16.
(I) 3,500,000 or more	Add 18.
(J) 8,000,000 or more	Add 20.
(K) 18,000,000 or more	Add 22.
(L) 40,000,000 or more	Add 24.
(M) 90,000,000 or more	Add 26''].

Option Two

[''(b) Specific Offense Characteristics

(1) If the loss exceeded $2,000, increase the offense level as follows:

Loss (apply the greatest)	Increase in level.
(A) More than $2,000	Add 2.
(B) More than 5,000	Add 4.
(C) More than 10,000	Add 5.
(D) More than 20,000	Add 6.
(E) More than 40,000	Add 7.
(F) More than 70,000	Add 8.
(G) More than 120,000	Add 9.
(H) More than 200,000	Add 10.
(I) More than 350,000	Add 11.
(J) More than 500,000	Add 12.
(K) More than 800,000	Add 13.
(L) More than 1,500,000	Add 14.
(M) More than 2,500,000	Add 15.
(N) More than 5,000,000	Add 16.
(O) More than 7,500,000	Add 18.
(P) More than 15,000,000	Add 20.
(Q) More than 25,000,000	Add 22.
(R) More than 50,000,000	Add 24'''].

Option Three

[''(b) Specific Offense Characteristics

(1) If the loss exceeded $5,000, increase the offense level as follows:

Loss (apply the greatest)	Level of increase.
(A) More than $5,000	Add 2.
(B) More than 20,000	Add 4.
(C) More than 60,000	Add 6.
(D) More than 100,000	Add 8.
(E) More than 250,000	Add 10.
(F) More than 500,000	Add 12.
(G) More than 750,000	Add 14.
(H) More than 1,000,000	Add 16.
(I) More than 3,000,000	Add 18.
(J) More than 7,000,000	Add 20.
(K) More than 12,000,000	Add 22.
(L) More than 20,000,000	Add 24.
(M) More than 40,000,000	Add 26.
(N) More than 80,000,000	Add 28'''].

Section 2B1.1 is amended by deleting (b)(3) in its entirety and inserting in lieu thereof:

''If sophisticated means were used to impede discovery of the offense or its extent, increase by 2 levels. If the resulting offense level is less than level 12, increase to level 12.''

Section 2B1.1 is amended by deleting (b)(4)(A) in its entirety and by amending (b)(4)(B) by deleting ''(B)'' and by deleting and changing ''4 levels'' to ''2 levels''.

* * * * *.

Option Three Only

[Section 2F1.1(a) is amended by deleting ''6'' and inserting in lieu thereof ''8'']. Section 2F1.1 is amended by deleting (b)(1) in its entirety, and inserting in lieu thereof, one of the following three options:

Option One

[''(b) Specific Offense Characteristics.

(1) If the loss was $5,000 or more, increase the offense level as follows:

Loss (apply the greatest)	Increase in level
(A) $5,000 or more	Add 2.
(B) 10,000 or more	Add 4.
(C) 22,500 or more	Add 6.
(D) 50,000 or more	Add 8.
(E) 120,000 or more	Add 10.
(F) 275,000 or more	Add 12.
(G) 650,000 or more	Add 14.
(H) 1,500,000 or more	Add 16.
(I) 3,500,000 or more	Add 18.
(J) 8,000,000 or more	Add 20.
(K) 18,000,000 or more	Add 22.
(L) 40,000,000 or more	Add 24.
(M) 90,000,000 or more	Add 26''].

Option Two

[''(b) Specific Offense Characteristics.

(1) If the loss exceeded $2,000, increase the offense level as follows:

Loss (apply the greatest)	Increase in level
(A) More than $2,000	Add 2.
(B) More than 5,000	Add 4.
(C) More than 10,000	Add 5.
(D) More than 20,000	Add 6.
(E) More than 40,000	Add 7.
(F) More than 70,000	Add 8.
(G) More than 120,000	Add 9.
(H) More than 200,000	Add 10.
(I) More than 350,000	Add 11.
(J) More than 500,000	Add 12.
(K) More than 800,000	Add 13.
(L) More than 1,500,000	Add 14.
(M) More than 2,500,000	Add 15.
(N) More than 5,000,000	Add 16.
(O) More than 7,500,000	Add 18.
(P) More than 15,000,000	Add 20.
(Q) More than 25,000,000	Add 22.
(R) More than 50,000,000	Add 24''].

Option Three

[''(b) Specific Offense Characteristics

(1) If the loss exceeded $5,000, increase the offense level as follows:

Loss (apply the greatest)	Level of increase
(A) More than $5,000	Add 2.
(B) More than 20,000	Add 4.
(C) More than 60,000	Add 6.
(D) More than 100,000	Add 8.
(E) More than 250,000	Add 10.
(F) More than 500,000	Add 12.
(G) More than 750,000	Add 14.
(H) More than 1,000,000	Add 16.
(I) More than 3,000,000	Add 18.
(J) More than 7,000,000	Add 20.
(K) More than 12,000,000	Add 22.
(L) More than 20,000,000	Add 24.
(M) More than 40,000,000	Add 26.
(N) More than 80,000,000	Add 28''].

* * * * *

Section 2F1.1 is amended by deleting (b)(5) in its entirety, and by deleting (b)(2) in its entirety, and inserting in lieu thereof:

''If sophisticated means were used to impede discovery of the offense or its extent, increase by 2 levels. If the resulting offense level is less than level 12, increase to level 12.''

Section 2F1.1 is amended by inserting the following:

''(6) If the offense involved telemarketing, increase by 2 levels.

(7) If the offense [involved telemarketing conduct and either] victimized 10 or more persons over the age of 55, or targeted persons over the age of 55, increase by 2 levels.''

Section 2F1.1 is amended by adding the following cross reference as (c)(2):

''(2) If the offense involved arson or property destruction by use of explosives, apply § 2K1.4 (Arson, Property Damage by Use of Explosives), if the resulting offense level is greater than that determined above.''

* * * * *

Section 2T1.1 is amended by deleting (b)(5) in its entirety and inserting in lieu thereof:

''If sophisticated means were used to impede discovery of the offense or its extent, increase by 2 levels. If the resulting offense level is less than level 12, increase to level 12.''

Section 2T4.1 is amended by deleting the tax table, and inserting in lieu thereof, one of the following two options:

Option One

[''Tax Loss	Level
(A) $5,000 or more	8
(B) 10,000 or more	10
(C) 22,500 or more	12
(D) 50,000 or more	14
(E) 120,000 or more	16
(F) 275,000 or more	18
(G) 650,000 or more	20
(H) 1,500,000 or more	22
(I) 3,500,000 or more	24
(J) 8,000,000 or more	26
(K) 18,000,000 or more	28
(L) 40,000,000 or more	30
(M) 90,000,000 or more	32'']

Option Two

[''Tax Loss (apply the greatest)	Level
(A) $2,000 or less	8
(B) More than 2,000	9
(C) More than 5,000	10
(D) More than 10,000	11
(E) More than 20,000	12
(F) More than 40,000	13
(G) More than 70,000	14
(H) More than 120,000	15
(I) More than 200,000	16
(J) More than 350,000	17
(K) More than 500,000	18
(L) More than 800,000	19
(M) More than 1,500,000	20
(N) More than 2,500,000	21
(O) More than 5,000,000	22
(P) More than 7,500,000	24
(Q) More than 15,000,000	26
(R) More than 25,000,000	28
(S) More than 50,000,000	30'']

Issues for Comment

The following issues for comment are provided to facilitate informed comment on the issues raised by the preceding amendment.

(1) Loss Tables: In addition to requesting input on the options in the proposed amendment, the Commission requests comment on whether §§ 2B1.1 and 2F1.1 should have different base offense levels and different starting points and cutting points for the loss tables. If so, the Commission requests comment on what the respective base offense levels should be (for example, level 6 for § 2B1.1 and level 8 for § 2F1.1), on what loss amount should trigger the first increase ($2,000, $5,000, or $10,000 for § 2B1.1; $2,000, $5,000, $10,000, or $20,000 for § 2F1.1), and what the cutting points of the loss tables should be.

(2) Telemarketing offenses: In addition to the issues raised by the proposed amendment, the Commission invites comment on whether the guidelines should provide a broader enhancement for other frauds involving the victimization or targeting of persons over the age of 55. The Commission also invites comment on whether the guidelines should be amended to add a Chapter Three adjustment that provides a two-level increase if the offense, regardless of type, involves the victimization of 10 or more persons over the age of 55 or the targeting of persons over the age of 55. Alternatively, the Commission invites comment on whether § 3A1.1 (Vulnerable Victim) should be amended to provide that it will always apply when an offense involves the victimization of 10 or more persons over the age of 55 or the targeting of persons over the age of 55, or to provide an enhancement for offenses involving telemarketing conduct.

(3) Cross Reference: The Commission invites comment on whether the following cross reference should be adopted: ''If the offense involved a bribe, gratuity, commercial bribe or kickback, or similar conduct, apply § 2C1.2 (Offering, Giving, Soliciting, or Receiving a Gratuity); § 2C1.5 (Payment to Obtain Public Office); § 2C1.6 (Loan or Gratuity to Bank Examiner, or Gratuity for Adjustment of Farm Indebtedness, or Procuring Bank Loan, or Discount of Commercial Paper); § 2C1.7 (Fraud Involving Deprivation of

the Intangible Right to the Honest Services of Public Officials; Conspiracy to Defraud by Interference with Governmental Functions); or § 2B4.1 (Bribery in Procurement of Bank Loan and Other Commercial Bribery), whichever is the most applicable, would provide that the cross reference should apply only if the listed offense conduct results in a higher offense level.''

(4) Consolidation of §§ 2B1.1 and 2F1.1: Currently there is sometimes confusion about whether a given offense should be sentenced using § 2B1.1 or § 2F1.1 and which definition of loss should be used. The Commission invites comment on whether §§ 2B1.1 and 2F1.1 should be consolidated into one guideline and, if so, what provisions of each should be retained in the consolidated guideline, and how the two definitions of loss should be combined into one. Alternatively, the Commission invites comment on whether the definitions of loss in §§ 2B1.1 and 2F1.1 should be combined into one definition and, if so, what provisions of each should be retained in the consolidated definition and how the new definition should be worded.

Additional Issues for Comment—Determination of Loss

These issues for comment solicit input on possible changes to the definition of loss in §§ 2B1.1 and 2F1.1 to clarify the Commission's intent, resolve issues raised by case law, and aid in consistency of application.

(1) Standard of causation: Currently, the definition of loss in § 2F1.1 does not specify a standard of causation governing whether unintended or unexpected losses are to be included in the loss calculation under the guidelines. See United States v. Neadle, 72 F.3d 1104, 1108–11 (3d Cir.) (holding defendant fraudulently posted required $750,000 bond to open insurance company accountable for $23 million in property damage from a hurricane that the defendant's insurance company lacked the assets to cover, loss undoubtedly would have gone unreimbursed regardless of defendant's insurance fraud), amended, 79 F.3d 14 (3d Cir.), cert. denied, 117 S. Ct. 238 (1996).

The Commission invites comment on whether to clarify the standard of causation necessary to link a harm with an offense under § 1B1.3(a)(3). More specifically, the Commission requests comment on whether it should include only harm proximately caused (or directly caused) by the defendant's conduct, or whether it should include all harm that would not have occurred ''but for'' the defendant's conduct. Finally, the Commission invites comment on whether, regardless of which causation standard is adopted, the Commission should invite the possibility of a departure when losses far exceed those intended or reasonably foreseen by the defendant.

(2) Market value: The current definition of loss in theft and fraud uses the concept of market value as an important factor in determining loss. The Commission invites comment on whether this concept should be clarified to specify whether retail, wholesale, or black market value is intended, depending on the nature of the offense. In addition, the Commission invites comment on whether market value includes the enhanced value on the black market when it exceeds fair market value, or alternatively, whether black market value should be a departure consideration.

(3) Consequential damages and administrative costs—inclusion of interest: The definition of loss in fraud provides that reasonably foreseeable consequential damages and administrative costs are included in determinations of loss only in cases involving procurement fraud or product substitution. The Commission invites comment on whether consequential damages should be used in determinations of loss in all theft and/or fraud cases, and if so, how such damages should be determined. Alternatively, should the special rule in fraud on the inclusion of consequential damages and administrative costs in loss determinations in procurement fraud and product substitution cases be deleted? The Commission further invites comment on whether, even if consequential damages, generally, are not included in loss, they might be used as an offset against the value of the benefit received by the victim(s).

Although the definition of loss in the theft and fraud guidelines excludes interest ''that could have been earned had the funds not been stolen,'' some courts have interpreted the definition of loss to permit inclusion in loss of the interest that the defendant agreed to pay in connection with the offense. Cf., United States v. Hoyle, 33 F.3d 415, 419 (4th Cir. 1994) (''[I]nterest shall not be included to determine loss for sentencing purposes.'') with United States v. Gilberg, 75 F.3d 15, 18–19 (1st Cir. 1996) (including in loss interest on fraudulently procured mortgage loan); and United States v. Henderson, 19 F.3d 917, 928–29 (5th Cir.) (''Interest should be included if, as here, the victim had a reasonable expectation of receiving interest from the transaction.''), cert. denied, 115 S. Ct. 207 (1994).

The Commission invites comment on whether the definition of loss should be clarified to (A) exclude all interest from loss; (B) to permit inclusion of bargained-for interest, or (C) to allow consideration of bargained-for interest as a departure factor only.

(4) Benefit received by victims: Currently, with the exception of payments made and collateral pledged in fraudulent loan cases, the definition of loss does not specify whether benefit received by the victim(s) reduces the amount of the loss. Courts have generally, although not unanimously, held that loss in fraud cases must be reduced by any benefits received by the victim(s). See, e.g.,United States v. Maurello, 76 F.3d 1304, 1311–12 (3d Cir. 1996) (calculating loss by subtracting value of satisfactory legal services from amount of fees paid to bogus lawyer); United States v. Reddeck, 22 F.3d 1504, 1513 (10th Cir. 1994) (reducing loss by value of education received from bogus university); United States v. Mucciante, 21 F. 3d 1228, 1237–38 (2d Cir.) (refusing to reduce loss by amount that defendant ''repaid * * * as part of a meretricious effort to maintain [the victims'] confidences'' in a non-Ponzi scheme), cert. denied 115 S. Ct. 361 (1994).

A Ponzi scheme is a particular kind of criminal offense that may warrant explicit treatment in the definition of loss. A Ponzi scheme is defined as ''a fraudulent investment scheme in which money placed by later investors pays artificially high dividends to the original investors, thereby attracting even larger investments.'' Bryan A. Garner, A Dictionary of Modern Legal Usage 671 (2d ed. 1995). Several cases raise some important issues about Ponzi schemes.

The Seventh Circuit was the first to address the issue of calculating loss from a Ponzi scheme. In United States v. Holiusa, 13 F.3d 1043, 1044–45 (6th Cir. 1994), the defendant perpetuated a Ponzi scheme by appropriating $11,625,739 from ''investors'' and returning approximately $8,000,000 in ''interest.'' The appellate court rejected the district court holding that because the defendant intended ''to defraud all of the victims of their money'' he was accountable for the full $11,625,739. Id. at 1045; see also U.S.S.G. § 2F1.1, comment. (n. 7) (''[I]f an intended loss that the defendant was attempting to inflict can be determined, this figure will be used if it is greater than the actual loss.''). The court held that ''[t]he full amount invested was not the probable or intended loss because [the defendant] did not at any point intend

to keep the entire sum. * * * Because he did not intend to and did not keep the full $11.6 million, that amount does not reflect the actual or intended loss, and is not an appropriate basis for sentencing.'' Holiusa, 13 F.3d at 1046–47. The court remanded the case, instructing the district court not to include in loss ''amounts that [the defendant] both intended to and indeed did return to investors.'' Id. at 1048; see also United States v. Wolfe, 71 F.3d 611, 618 (6th Cir. 1995) (following Holiusa).

While the Seventh Circuit saw the concept of intended loss as the focus of Ponzi scheme loss calculation, the Eleventh Circuit took a different approach in United States v. Orton, 73 F.3d 331 (11th Cir. 1996). The Orton defendant had received $525,865.66 from and returned $242,513.65 to the ''investors.'' Twelve investors received more than they had invested; the total lost by the other investors was $391,540.01. Id. at 333. The Eleventh Circuit adopted what it dubbed the ''loss to losing victims'' method: it held the defendant accountable for ''the net losses of all victims who lost all or part of the money they invested.'' Id. at 334. The money that the defendant received from and returned to those investors who ended up with a net gain did not enter into the loss calculation. The Orton defendant was therefore held accountable for $391,540.01.

The Commission invites comment on whether the value of the benefit received by the victim(s) of an offense should be used to reduce the amount of the loss and, if so, how benefits that are more theoretical than real should be valued. The Commission also invites comment on whether the money returned to victim-investors (including ''profits'') in a Ponzi scheme should be included in the calculation of loss. In addition, the Commission invites comment on whether in cases involving fraudulent representations of a defendant's professional license or training, the loss should be reduced by the value of the ''benefit/service'' given to the victim (or to someone else on the victim's behalf) by the defendant, or whether it should be determined based on the full charge for the ''service.''

(5) Diversion of government benefits: The Commission invites comment on how loss should be determined in fraud cases involving the diversion of government program benefits and kickbacks. These cases tend to present special difficulties in determining or estimating loss and determining gain. At the same time, there is a strong societal interest in the integrity of government programs. More specifically, the Commission invites comment on whether the ''value of benefits diverted'' in such cases should be reduced by the ''benefits'' or services provided by the participants. In addition, the Commission invites comment on whether special rules should be devised for such cases to facilitate the determination/estimation of loss or gain, such as a special rule that determines loss or gain based on a percentage of the total value of the benefits diverted and, if so, what percentage should be chosen (such as 5–40%). The Commission also invites comment on whether the nature and seriousness of such offenses require a specific offense characteristic to target such conduct and/or a floor offense level to guarantee a minimum offense level.

(6) Pledged collateral and payments: Currently, the value of pledged collateral is determined based on the net proceeds of the sale of the collateral, or if the sale has not been accomplished prior to sentencing, then the market value of the collateral reduced by the expected cost of the sale. See, e.g., United States v. Barrett, 51 F.3d 86, 90–91 (7th Cir. 1995) (including in loss the drop in value of property securing fraudulently obtained loans). The Commission invites comment on how and when to determine loss in respect to crediting pledged collateral and payments. More specifically, the Commission invites comment on whether to clarify the current rule that only payments made prior to discovery of the offense are to be credited in determining loss, whether to clarify or change the current rule that provides that the value of the pledged collateral is determined by the amount the lending institution has recovered or can expect to recover, and whether to clarify what constitutes ''discovery of the offense.'' In addition, the Commission invites comment on whether the value of the pledged collateral should be determined at the time it is pledged or at the time of discovery of the offense, or some other time. In addition, the Commission invites comment on whether unforeseen (or unforeseeable) decreases (or increases) in the value of the collateral should affect the credit to be used to determine loss.

(7) Gain: Currently gain can be used in lieu of loss in certain limited circumstances under § 2F1.1. Compare United States v. Kopp, 951 F.2d 521, 530 (3d Cir. 1991) (holding that gain cannot be used if loss is measurable even if loss is zero), with United States v. Haddock, 12 F.3d 950, 960 (10th Cir. 1993) (allowing gain to be used as alternative at all times). The Commission invites comment on whether to clarify the issue of whether or not gain may be used in lieu of loss. If the rule should be clarified, should upward departures be encouraged if the amount of gain substantially exceeds loss? Alternatively, the Commission invites comment on whether gain should be used whenever it is greater than actual or intended loss and, if so, how gain should be determined. The Commission also invites comment on whether there are situations in which gain should be used for theft-type cases under § 2B1.1.

(8) Intended loss: Intended loss is to be used in fraud cases when it is determined to be greater than actual loss. § 2F1.1, comment. (n. 7). Some courts have held that intended loss should be limited by concepts of ''economic reality'' or impossibility. Compare United States v. Moored, 38 F.3d 1419, 1425 (6th Cir. 1994) (focusing on loss that defendant ''realistically intended'') with United States v. Lorenzo, 995 F.2d 1448, 1460 (9th Cir.) (''[T]he amount of [intended] loss * * * does not have to be realistic.''), cert. denied, 510 U.S. 881 (1993).

The Commission invites comment on whether the current rule should be changed to provide that loss is to be based primarily on actual loss, with intended loss available only as a possible ground for departure. The Commission further invites comment on whether, if the substance of the current rule is to be retained, the magnitude of intended loss should be limited by the amount that the defendant realistically could have succeeded in obtaining. More specifically, the Commission invites comment on whether intended loss should be limited by concepts of ''economic reality'' or impossibility, such as in a government sting operation where there can be no loss, or in a false insurance claims case in which the defendant submits a claim for an amount in excess of the fair market value of the item.

(9) Risk of loss: Currently, in some cases defendants obtain loans by fraudulent means but the loss is determined to be zero because of pledged collateral and payments made prior to discovery. The Commission invites comment on whether the definition of loss should be revised to include the concept of risk of loss, so as to ensure higher punishment levels for defendants who commit serious crimes that, because of the value of pledged collateral or payments made before discovery, result in low or even zero loss, and if so, how the risk of loss might be determined. See § 2F1.1, comment. (n. 7).

(10) Loss amounts that over- or understate the significance of the offense: The Commission invites comment on whether to provide guidance for applying the current provision allowing departure where the loss amount over- or understates the significance of the offense. See § 2F1.1, comment. (n. 10). More specifically, the Commission invites comment on whether to specify that where the loss amount included through § 1B1.3 (Relevant Conduct) is far in excess of the benefit personally derived by the defendant, the court might depart down to an offense level corresponding to the loss amount that more appropriately measures the defendant's culpability. Alternatively, the Commission invites comment on whether to provide a specific offense characteristic or special rule to reduce the offense level in such cases.

Chapter Two, Part M

19(A). Issue for comment: Section 511 of the Antiterrorism and Effective Death Penalty Act of 1996 pertains to biological weapons. It incorporates attempt and conspiracy into 18 U.S.C. § 175, which prohibits the production, stockpiling, transferring, acquiring, retaining, or possession of biological weapons. It also expands the scope of biological weapons provisions in chapter 10 of title 18 by expanding the meaning of biological agents.

Section 521 creates a new offense at 18 U.S.C. § 2332c. The new offense smakes it unlawful for a person, without lawful authority, to use (or attempt or conspire to use) a chemical weapon against a United States national outside the United States, any person within the United States, or any federal property. The penalty is any term of years or life or, if death results, death or any term of years or life.

The Commission invites comment as to how the guidelines could be amended to include these statutes. One approach could be to amend § 2M6.1 (Unlawful Acquisition, Alteration, Use, Transfer, or Possession of Nuclear Material, Weapons, or Facilities) to include these statutes. If the Commission were to select this approach, what changes, if any, would be appropriate to accommodate these offenses?

(B) Issue for comment: Section 702 creates a new offense at 18 U.S.C. § 2332b. The new offense makes it unlawful for a person, committing conduct occurring outside the United States and conduct occurring inside the United States and under specified circumstances, to (1) kill, kidnap, maim, or commit an assault resulting in serious bodily injury or with a dangerous weapon, or (2) create a substantial risk of serious bodily injury to another person by damaging (or conspiring to damage) any real or personal property within the United States. The specified circumstances are using or obstructing interstate or foreign commerce, having the federal government or one of its employees or agents as a victim or intended victim, involving federal property, and committing the offense in the territorial sea of the United States or within the special maritime or territorial jurisdiction of the United States.

The terms of imprisonment under the new offense are (1) death, or life, or any term of years, if death resulted; (2) any term of years, for kidnaping; (3) not more than 35 years, for maiming; (4) not more than 30 years, for assault; (5) not more than 25 years, for damaging or destroying property; (6) for any term of years not exceeding that which would have applied if the offense had been committed, for a conspiracy; and (7) not more than 10 years, for threatening to commit any such offense.

The provision also expressly precludes the imposition of a term of probation for any of the above-described offenses and precludes the imposition of concurrent sentences for terms of imprisonment imposed under this section with any other terms of imprisonment.

The Commission invites comment on how the guidelines should be amended to include this statute. For example, one option could be to amend the statutory index to reference the statute to the guideline for each of the underlying offenses.

Section 2X3.1 Accessory After the Fact

Section 2X4.1 Misprision of Felony

20. Synopsis of Proposed Amendment: This is a three-part amendment. First, this amendment clarifies the application of § 2X3.1 when this guideline is used as the result of a cross reference.

Second, this amendment clarifies the interaction of § 1B1.3 (Relevant Conduct) with §§ 2X3.1 (Accessory After the Fact) and 2X4.1 (Misprision of Felony). In the case of a guideline with alternative base offense levels, as opposed to one base offense level and one or more specific offense characteristics, the question has arisen as to whether the knowledge requirement set forth in Application Note 1 applies to the selection of the appropriate base offense level. Consistent with § 1B1.3, this amendment clarifies that the knowledge requirement does apply.

Finally, this amendment clarifies that, for purposes of §§ 2X3.1 and 2X4.1, if the offense guideline applicable to the underlying offense refers to the defendant, such reference is to the defendant who committed the underlying offense, not to the defendant who is convicted of being an accessory or to the defendant who committed the misprision.

Proposed Amendment: The Commentary to § 2X3.1 captioned ''Application Notes'' is amended in Note 1 by deleting:

''Apply the base offense level plus any applicable specific offense characteristics that were known, or reasonably should have been known, by the defendant; see Application Note 10 of the Commentary to § 1B1.3 (Relevant Conduct).'',

And inserting in lieu thereof:

''However, if the application of § 2X3.1 results from a cross reference or other instruction in another Chapter Two offense guideline (e.g., §§ 2J1.2(c)(1), 2J1.3(c)(1)), the underlying offense is the offense determined by that cross reference or instruction. Determine the offense level (base offense level, specific offense characteristics, and cross references) based on the conduct that was known, or reasonably should have been known, by the defendant; see Application Note 10 of the Commentary to § 1B1.3 (Relevant Conduct). In addition, if the Chapter Two offense guideline applicable to the underlying offense refers to the defendant, such reference is to the defendant who committed the underlying offense, not to the defendant who is convicted of being an accessory or to whom this section applies due to a cross reference or other instruction in another Chapter Two offense guideline.''.

The Commentary to § 2X4.1 captioned ''Application Notes'' is amended in Note 1 by deleting ''Apply the base offense level plus any applicable specific offense characteristics that were'' and inserting in lieu thereof ''Determine the offense level (base offense level, specific offense characteristics, and cross references) based on the conduct that was''; and by inserting at the end the following as the last sentence:

''In addition, if the Chapter Two offense guideline applicable to the underlying offense refers to the defendant, such reference is to the defendant who committed the underlying offense, not to the defendant who is convicted of committing the misprision or to whom this section applies due to a cross reference or other instruction in another Chapter Two offense guideline.''.

Part B—Role in the Offense

Introductory Commentary, § 3B1.1 (Aggravating Role)

21. Synopsis of Proposed Amendment: This two-part amendment (A) revises the Introductory Commentary to Chapter Three, Part B to put the application of §§ 3B1.1 (Aggravating Role) and 3B1.2 (Mitigating Role) in perspective and show the relationship among these adjustments, and (B) revises § 3B1.1. Options 1 and 2 of Part B maintain the current structure of § 3B1.1 but revise the guideline to provide clearer definitions and cure a significant anomaly in the current guideline structure. Option 3 presents an alternative structure similar to the proposed amendment to § 3B1.2.

Following the amendment to § 3B1.2 are several issues for comment designed to elicit suggestions for alternative approaches.

(A) Proposed Amendment: Chapter 3, Part B—Role in the Offense is amended in the first sentence of the Introductory Commentary by inserting ''whether, in committing the offense,'' immediately following ''based upon'';

By deleting ''role the'' immediately before ''defendant'';

By inserting ''(A)'' immediately following ''defendant'';

By deleting ''in committing the offense'' and inserting in lieu thereof ''an aggravating or a mitigating role, (B) abused a position of trust or used a special skill, or (C) used a minor''.

Chapter 3, Part B—Role in the Offense is amended in the second sentence of the Introductory Commentary by deleting ''The determination of a defendant's role in the offense'' and inserting in lieu thereof ''Each of these determinations'';

By deleting ''all'' and inserting in lieu thereof ''the'';

By deleting ''within the scope of'' and inserting in lieu thereof ''for which the defendant is accountable under'';

And by deleting the '','' immediately following ''(Relevant Conduct)'' and inserting in lieu thereof a '';''.

Chapter 3, Part B—Role in the Offense is amended in the Introductory Commentary by deleting the second paragraph in its entirety and inserting in lieu thereof the following:

Sections 3B1.1 (Aggravating Role) and 3B1.2 (Mitigating Role) are designed to provide appropriate adjustments in the defendant's offense level based on the defendant's role and relative culpability in the offense conduct for which the defendant is accountable under § 1B1.3 (Relevant Conduct). For § 3B1.1 (Aggravating Role) or § 3B1.2 (Mitigating Role) to apply, the offense must involve the defendant and at least one other participant. If an offense has only one participant, neither § 3B1.1 nor § 3B1.2 will apply. In some cases, some participants may warrant an upward adjustment under § 3B1.1, other participants may warrant a downward adjustment under § 3B1.2, and still other participants may warrant no role adjustment.''.

(B) Proposed Amendment:

Option 1:

Section § 3B1.1 is amended by deleting ''follows:'' and inserting in lieu thereof ''follows (Apply the Greatest):''.

Section § 3B1.1(a) is amended by deleting ''a criminal activity that involved five or more participants or was otherwise extensive'' and inserting in lieu thereof ''an offense that involved at least four other participants or was otherwise extensive''.

Section § 3B1.1(b) is amended by deleting ''(but not an organizer or leader) and the criminal activity involve five or more participants or was otherwise extensive'' and inserting in lieu thereof ''(1) of at least [three][four] other participants in the offense, or (2) in an offense that was otherwise extensive''.

Section § 3B1.1(c) is amended by deleting ''in any criminal activity other than described in (a) or (b)'' and inserting in lieu thereof ''of at least one other participant in the offense''.

The Commentary to § 3B1.1 captioned ''Application Notes'' is amended in Note 1 by inserting at the beginning ''For purposes of this guideline-'';

By deleting ''convicted'' and inserting in lieu thereof ''charged [or specifically identified, so long as the court determines that the offense involved another person]''.

The Commentary to § 3B1.1 captioned ''Application Notes'' is amended by deleting Note 2 in its entirety and inserting in lieu thereof the following as paragraphs two and three of Note 1:

''An 'organizer' or 'leader' is the participant who is primarily responsible for the criminal venture; the person in overall charge of the other participant(s). Generally, the organizer or leader will be the person who plans and organizes the offense, recruits the other key participant(s), makes the key decisions, directs and controls the actions of other participants, and receives the largest share of the proceeds. In some offenses (generally larger scale offenses), there may be more than one organizer or leader. The term 'organizer' or leader is not intended to apply to a person who merely suggests the commission of the offense.

A 'manager' or 'supervisor' is a person, other than an 'organizer' or 'leader,' who exercises managerial or supervisory authority over one or more other participants, either directly or indirectly. A manager or supervisor is at a lower level in the hierarchy than the organizer or leader of the offense, and generally will receive a share of the proceeds that is less than that of the organizer or leader but greater than that of the participant(s) that he or she manages or supervises.''.

The Commentary to § 3B1.1 captioned ''Application Notes'' is amended by redesignating Note 3 as Note 2; and inserting the following as the new Note 3:

''3. In the case of a defendant who would have merited a minor or minimal role adjustment but for the defendant's supervision of other minor or minimal participants, do not apply an adjustment from § 3B1.1 (Aggravating Role). Instead, this factor is to be considered in determining the appropriate reduction, if any, under § 3B1.2 (Mitigating Role). For example, if the defendant would have merited a reduction for a minimal role but for his or her supervision of other minimal participants, a reduction for a minor, rather than a minimal, role ordinarily would be appropriate. Similarly, if the defendant would have merited a reduction for a minor role but for his or her supervision of other minimal or minor participants, no reduction for role in the offense ordinarily would be appropriate.

The interaction of §§ 3B1.1 and 3B1.2 is to be addressed in the manner described above. Thus, if an adjustment from § 3B1.1 is applied, an adjustment from § 3B1.2 may not be applied.''.

The Commentary to § 3B1.1 captioned ''Application Notes'' is amended by deleting Note 4 in its entirety and inserting in lieu thereof the following:

''4. Illustrations of Circumstances That May Warrant an Upward Departure.

There may be circumstances in which a defendant has a more culpable role in the offense but does not qualify for an upward adjustment under this section. In such circumstances, an upward departure may be considered. The following are examples of circumstances that may warrant an upward departure analogous to an aggravating role adjustment:

(A) A defendant who exercised management responsibility over the property, assets, or activities of a criminal organization but who did not organize, lead, manage, or supervise another participant.

(B) In a controlled substance offense, a defendant who functions at a relatively high level in a drug distribution network but who, nevertheless, may not qualify for an aggravating role adjustment because he or she does not exercise supervisory control over other participants.''.

Option 2:

Section 3B1.1(a) is amended by deleting ''a criminal activity that involved five or more participants or was otherwise extensive'' and inserting in lieu thereof ''an offense that involved at least four other participants or was otherwise extensive''.

Section 3B1.1 is amended by deleting subsection (b) in its entirety.

Section 3B1.1 is amended by redesignating subsection (c) as subsection (b); by deleting ''in any criminal activity other than described in (a) or (b)'' and inserting in lieu thereof ''of one other participant in the offense''.

Section 3B1.1 is amended by inserting as an additional paragraph at the end ''In cases falling between (a) and (b), increase by 3 levels.''.

The Commentary to § 3B1.1 captioned ''Application Notes'' is amended in Note 1 by inserting at the beginning ''For purposes of this guideline-''; by deleting ''convicted'' and inserting in lieu thereof ''charged [or specifically identified, so long as the court determines that the offense involved another person]''; and by inserting the following additional paragraphs:

''An 'organizer' or 'leader' is the participant who is primarily responsible for the criminal venture; the person in overall charge of the other participant(s). Generally, the organizer or leader will be the person who plans and organizes the offense, recruits the other key participant(s), makes the key decisions, directs and controls the actions of other participants, and receives the largest share of the proceeds. In some offenses (generally larger scale offenses), there may be more than one organizer or leader. The term 'organizer' or 'leader' is not intended to apply to a person who merely suggests the commission of the offense.

A 'manager' or 'supervisor' is a person, other than an 'organizer' or 'leader,' who exercises managerial or supervisory authority over one or more other participants, either directly or indirectly. A manager or supervisor is at a lower level in the hierarchy than the organizer or leader of the offense, and generally will receive a share of the proceeds that is less than that of the organizer or leader but greater than that of the participant(s) that he or she manages or supervises.''.

The Commentary to § 3B1.1 captioned ''Application Notes'' is amended by deleting Note 2 in its entirety and inserting in lieu thereof:

''To qualify for a four-level adjustment under subsection (a), the defendant must be an organizer or leader of an offense involving at least four participants in addition to the defendant. The defendant need not, however, personally exercise supervisory control over all such participants. To qualify for a two-level adjustment under subsection (b), the defendant must have been the organizer, leader, manager, or supervisor of one other participant. In cases falling between subsections (a) and (b), i.e., where the defendant organizes, leads, manages, or supervises more than one participant but whose aggravating role does not rise to the level of that described in subsection (a), a three level upward adjustment is warranted.''.

The Commentary to § 3B1.1 captioned ''Application Notes'' is amended by deleting Note 4 in its entirety and inserting in lieu thereof the following:

''4. In the case of a defendant who would have merited a minor or minimal role adjustment but for the defendant's supervision of other minor or minimal participants, do not apply an adjustment from § 3B1.1 (Aggravating Role). Instead, this factor is to be considered in determining the appropriate reduction, if any, under § 3B1.2 (Mitigating Role). For example, if the defendant would have merited a reduction for a minimal role but for his or her supervision of other minimal participants, a reduction for a minor, rather than a minimal, role ordinarily would be appropriate. Similarly, if the defendant would have merited a reduction for a minor role but for his or her supervision of other minimal or minor participants, no reduction for role in the offense ordinarily would be appropriate.

The interaction of §§ 3B1.1 and 3B1.2 is to be addressed in the manner described above. Thus, if an adjustment from § 3B1.1 is applied, an adjustment from § 3B1.2 may not be applied.''.

The Commentary to § 3B1.1 captioned ''Application Notes'' is amended by inserting the following additional note:

''5. Illustrations of Circumstances That May Warrant an Upward Departure.

There may be circumstances in which a defendant has a more culpable role in the offense but does not qualify for an upward adjustment under this section. In such circumstances, an upward departure may be considered. The following are examples of circumstances that may warrant an upward departure analogous to an aggravating role adjustment:

(A) A defendant who exercised management responsibility over the property, assets, or activities of a criminal organization but who did not organize, [lead], manage, or supervise another participant.

(B) In a controlled substance offense, a defendant who functions at a relatively high level in a drug distribution network but who, nevertheless, may not qualify for an aggravating role adjustment because he or she does not exercise supervisory control over other participants.''.

Option 3:

Section 3B1.1 is deleted in its entirety and inserting in lieu thereof the following:

''*Section 3B1.1. Aggravating Role*

Based on the defendant's role in the offense as a substantially more culpable participant, increase the offense level as follows (Apply the greater):

(a) If the defendant had [a major aggravating] role in [the] [a large-scale] offense, increase by 4 levels.

(b) If the defendant had [a lesser aggravating] role in the offense, increase by 2 levels.

Commentary

Application Notes:

1. For purposes of this guideline—

A ''participant'' is a person who is criminally responsible for the commission of the offense, but need not have been charged [or specifically identified, so long as the court determines that the offense involved another such person]. A person who is not criminally responsible for the commission of the offense (e.g., an undercover law enforcement officer) is not a participant.

[''Large-scale offense'' means an offense that involved at least five participants, including the defendant, or an offense that involved at least two participants, including the defendant, and is otherwise extensive.]

2. For a major aggravating role adjustment to apply under subsection (a), the defendant must be (A) a substantially more culpable participant, and (B) among the most culpable participants in the offense. The following is a non-exhaustive list of characteristics typically possessed by a defendant with a major aggravating role:

(i) Broad knowledge and understanding of the scope and structure of the offense, and of the identity and role of the other participants in the offense;

(ii) Sophisticated tasks performed;

(iii) [Primary] [major] decision-making authority in the offense;

(iv) [Primary] [major] responsibility and control over the property, finances, and other participants involved in the offense;

(v) The anticipated or actual total compensation or benefit was large in comparison to the total return typically associated with offenses of the same type and scope; and

(vi) Recruitment of other participants in the offense.

3. For a lesser role adjustment to apply under subsection (b), the defendant must (A) be a substantially more culpable participant, and (B) typically possess some of the characteristics associated with a major aggravating role, but not qualify for a major aggravating role adjustment.

4. The determinations of (A) whether a defendant is a substantially more culpable participant warranting an aggravating role adjustment under this section, and (B) if so, whether a major aggravating or lesser aggravating role adjustment is more appropriate, involve case-specific, fact-based assessments of the defendant's conduct in comparison to that of other participants in the offense. [In making these determinations, and particularly in determining whether a defendant in fact has an aggravating role, the court may also wish to compare the conduct of the defendant to the conduct of an average participant in an offense of the same type and scope.] The sentencing judge is in a unique position to make these determinations, based on the judge's assessment of all of the relevant circumstances.

19. In the case of a defendant who would have merited a minor or minimal role adjustment but for the defendant's supervision of other minor or minimal participants, do not apply an adjustment from § 3B1.1 (Aggravating Role). Instead, this factor is to be considered in determining the appropriate reduction, if any, under § 3B1.2 (Mitigating Role). For example, if the defendant would have merited a reduction for a minimal role but for his or her supervision of other minimal participants, a reduction for a minor, rather than a minimal, role ordinarily would be appropriate. Similarly, if the defendant would have merited a reduction for a minor role but for his or her supervision of other minimal or minor participants, no reduction for role in the offense ordinarily would be appropriate.

The interaction of §§ 3B1.1 and 3B1.2 is to be addressed in the manner described above. Thus, if an adjustment from § 3B1.1 is applied, an adjustment from § 3B1.2 may not be applied.''.

Section 3B1.2 Mitigating Role

22(A). Synopsis of Proposed Amendment: This amendment clarifies the operation of the mitigating role adjustment in § 3B1.2, as follows:

1. The language in the guideline is standardized by using the term ''offense'' instead of ''criminal activity.''

2. The ''intermediate,'' three-level reduction is bracketed for possible deletion because it does not provide a meaningfully distinct category and is unnecessary in view of the overlapping ranges feature of the Sentencing Table.

3. A common, umbrella definition for mitigating role; i.e., ''substantially less culpable participant'' is provided. This definition should assist the court in distinguishing mitigating role defendants from those who receive an aggravating or no role adjustment.

4. Commentary in current Application Note 2 that has been viewed as overly restrictive in regard to the minimal role adjustment is removed. In its place, a non-exhaustive list of typical characteristics associated with minimal role is provided. The characteristics are derived from the case law and staff review of mitigating role cases.

5. A somewhat more helpful but still flexible definition of minor role is provided.

6. Commentary is added to reflect Commission intent that district court assessments of mitigating role should be reviewed deferentially.

7. A circuit conflict regarding how mitigating role comparisons should be done—whether within the context of relevant conduct or, also by comparing the defendant to a hypothetical average participant—is addressed. The suggested ''compromise'' resolution (see bracketed language in Application Note 4) is to require the relevant conduct comparison but also suggest/allow the broader, ''average participant'' comparison if the court finds it helpful.

8. Commentary is added to address the burden of persuasion in a common-sense fashion consistent with the overall guidelines structure.

9. Commentary is added to address another circuit conflict regarding whether a court can analogize to mitigating role and downwardly depart when a defendant is ''directed'' to some extent by a government agent or other person who is not a criminally responsible participant. Whether the bracketed language that provides a qualified ''yes'' answer should be included is a policy judgment for the Commission.

10. The existing background commentary is removed because it is largely redundant and unnecessary.

Option 1:

Section § 3B1.2 is amended in the first paragraph by inserting ''as a substantially less culpable participant'' immediately following ''offense''.

Section § 3B1.2(a) is amended by deleting ''was a minimal participant in any criminal activity'' and inserting in lieu thereof ''had a minimal role in the offense''.

Section § 3B1.1(b) is amended by deleting ''was a minor participant in any criminal activity'' and inserting in lieu thereof ''had a minor role in the offense''.

Option 2:

Section § 3B1.2 is amended by inserting ''as a substantially less culpable participant'' immediately following ''offense''.

Section § 3B1.2(a) is amended by deleting ''was a minimal participant in any criminal activity'' and inserting in lieu thereof ''had a minimal role in the offense''.

Section § 3B1.1(b) is amended by deleting ''was a minor participant in any criminal activity'' and inserting in lieu thereof ''had a minor role in the offense''.

Section § 3B1.2 is amended by deleting ''In cases falling between (a) and (b), decrease by 3 levels.''.

Options 1 and 2:

The Commentary to § 3B1.2 captioned ''Application Notes'' is amended by deleting Note 1 in its entirety and inserting in lieu thereof the following:

''1. For purposes of this guideline—

'Participant' is defined in the Commentary to § 3B1.1 (Aggravating Role).

'Substantially less culpable participant' means a defendant who (A) is recruited by, or voluntarily assists, another more culpable participant in facilitating the commission of a criminal offense, and (B) performs one or more limited, discrete functions that typically are less critical to the success of the offense.''.

The Commentary to § 3B1.2 captioned ''Application Notes'' is amended by deleting Note 2 in its entirety and inserting in lieu thereof the following:

''2. For a minimal role adjustment to apply under subsection (a), the defendant must be (A) a substantially less culpable participant, and (B) among the least culpable participants in the offense. The following is a non-exhaustive list of characteristics typically possessed by a defendant with a minimal role:

(i) Lack of knowledge or understanding of the scope and

structure of the offense, and of the identity or role of the other participants in the offense;

(ii) only unsophisticated tasks performed;

(iii) no material decision-making authority in the offense;

(iv) no, or very minimal, supervisory responsibility over the property, finances, or other participants involved in the offense; and

(v) the anticipated or actual total compensation or benefit was small in comparison to the total return typically associated with offenses of the same type and scope.''.

The Commentary to § 3B1.2 captioned ''Application Notes'' is amended by deleting Note 3 in its entirety and inserting in lieu thereof the following:

''3. For a minor role adjustment to apply under subsection (b), the defendant must (A) be a substantially less culpable participant, and (B) typically possess some of the characteristics associated with a minimal role, but not qualify for a minimal role adjustment.''.

The Commentary to § 3B1.2 captioned ''Application Notes'' is amended in Note 4 by inserting in the first sentence ''a'' immediately before ''substantially'' and by deleting ''than'' and inserting in lieu thereof ''participant compared to''.

The Commentary to § 3B1.2 captioned ''Application Notes'' is amended by redesignating Note 4 as Note 5 and inserting the following new Note 4:

''4. The determinations of (A) whether a defendant is a substantially less culpable participant warranting a mitigating role adjustment under this section, and (B) if so, whether a minimal or minor role adjustment is more appropriate, involve case-specific, fact-based assessments of the defendant's conduct in comparison to that of other participants in the offense. [In making these determinations, and particularly in determining whether a defendant in fact has a mitigating role, the court may also wish to measure the defendant's conduct and relative culpability against the elements of the offense of conviction and to compare the conduct of the defendant to the conduct of an average participant in an offense of the same type and scope.] The sentencing judge is in a unique position to make these determinations, based on the judge's assessment of all of the relevant circumstances.

The defendant bears the burden of persuasion in establishing whether the defendant qualifies for a minimal or minor role adjustment under this section. As with any other factual issue, the court, in weighing the totality of the circumstances, is not required to find, based solely on the defendant's bare assertion, that such a role adjustment is warranted.''.

The Commentary to § 3B1.2 captioned ''Application Notes'' is amended by inserting the following additional note:

''6. If the defendant would be a substantially less culpable participant but for the fact that the defendant was recruited by a person who is not criminally responsible for the commission of the offense (e.g., an undercover law enforcement officer), a downward departure may be warranted. Such a downward departure should not result, without more, in a lower sentence than would result if the defendant had received a mitigating role adjustment under this section.''.

(B) Additional Issues for Comment: (1) The Commission invites comment on whether, as an alternative to separate guidelines for aggravating role (§ 3B1.1) and mitigating role (§ 3B1.2), it should adopt a single or unitary role guideline with aggravating, mitigating, and no role adjustments. What would be the advantages and/or disadvantages of such an approach in comparison to the current structure?

(2) Focusing on aggravating role, Option 3, the Commission invites comment on characteristics, in addition to those suggested, that reliably distinguish among aggravating role adjustments, as well as those characteristics that reliably distinguish defendants with an aggravating role from those warranting no role adjustment or a mitigating role adjustment.

(3) Focusing on mitigating role, the Commission invites comment on characteristics, in addition to those suggested in the proposed amendment, that distinguish defendants with a mitigating role from defendants who do not merit such an adjustment. Additionally, the Commission invites suggestions regarding characteristics, factors, and/or definitional language that would better provide a meaningful distinction between minimal role and minor role. Finally, the Commission invites comment on whether it should expressly state whether ''couriers'' or ''mules'' receive a minimal, minor, or no role adjustment.

Section 3C1.1 Obstructing or Impeding the Administration of Justice

23. Synopsis of Proposed Amendment: This amendment addresses a split in the circuits over the meaning of the last sentence of Application Note 1 in the Commentary to the Chapter Three adjustment for obstruction of justice. The issue is whether that sentence requires the use of a heightened standard of proof when the court applies an enhancement for perjury. Compare United States v. Montague, 40 F.3d 1251 (D.C. Cir. 1994) (applying the clear and convincing standard) with United States v. Zajac, 62 F.3d 145 (6th Cir. 1995) (applying the preponderance of the evidence standard). The amendment changes the last sentence of Application Note 1 so that it no longer suggests the use of a heightened standard of proof. Instead, it clarifies that the court should be mindful that not all inaccurate testimony or statements reflect a willful attempt to obstruct justice.

Second, subdivision (i) of Application Note 3 in § 3C1.1 is deleted as unnecessary. This subdivision is not helpful in contrasting the types of conduct that are serious enough to warrant an enhancement from those that are not serious enough to warrant the enhancement. The statutes referred to in subsection (i) include a hodgepodge of provisions. Some have very marginal, if any, relevance, e.g., 18 U.S.C. § 1507 (picketing or parading); and some, e.g., 18 U.S.C. § 1514 (civil action to restrain harassment of a victim or witness), and 1515 (definitions for certain provisions; general provision) have no relevance at all.

Third, this amendment adds an additional sentence at the end of Application Note 4 in § 3C1.1 to clarify the meaning of the phrase ''absent a separate count of conviction.'' A panel of the Seventh Circuit, although reaching the correct result, has examined this phrase and found it to be unclear. See United States v. Giacometti, 28 F.3d 698 (7th Cir. 1994).

Fourth, this amendment moves the last two sentences of Application Note 6 into a separate Application Note 7. This clarifies that the guidance provided in these two sentences applies to a broader set of cases than the cases described in the first two sentences of Application Note 6.

Proposed Amendment: The Commentary to § 3C1.1 captioned ''Application Notes'' is amended in Note 1 by deleting in the second sentence ''such testimony or statements should be evaluated in a light most favorable to the defendant'' and inserting the following in lieu thereof:

''The court should be cognizant that inaccurate testimony or statements sometimes may result from confusion, mistake, or faulty memory and, thus, not all inaccurate testimony or statements necessarily reflect a willful attempt to obstruct justice.''.

The Commentary to § 3C1.1 captioned ''Application Notes'' is amended in

Note 3(h) by deleting the '';'' and inserting in lieu thereof ''.''.

The Commentary to § 3C1.1 captioned ''Application Notes'' is amended in Note 3 by deleting subsection (i) in its entirety.

The Commentary to § 3C1.1 captioned ''Application Notes'' is amended in Note 4 by deleting ''The following is a non-exhaustive list of examples of the'' and inserting in lieu thereof ''Some'';

By deleting ''that, absent a separate count of conviction for such conduct,'' and inserting in lieu thereof ''ordinarily'';

By deleting ''but ordinarily can appropriately be sanctioned by the determination of the particular'' and inserting in lieu thereof ''but may warrant a greater''; by inserting immediately following ''guideline range'' the following:

''. However, if the defendant is convicted of a separate count for such conduct, this enhancement will apply and increase the offense level for the underlying offense (i.e., the offense with respect to which the obstructive conduct occurred). See Application Note 7, below.

The following is a non-exhaustive list of examples of the types of conduct to which this application note applies:''.

The Commentary to § 3C1.1 captioned ''Application Notes'' is amended in Note 6 in the second sentence by inserting ''(the offense with respect to which the obstructive conduct occurred),'' immediately before ''the count for the obstruction'' and by redesignating as new Note 7 the second and third sentences.

The Commentary to § 3C1.1 captioned ''Application Notes'' is amended by redesignating Note 7 as Note 8.

Section 3E1.1 Acceptance of Responsibility

24. Synopsis of Proposed Amendment: This amendment revises § 3E1.1 (Acceptance of Responsibility) in a number of key respects to provide greater flexibility to the sentencing judge in determining whether a defendant qualifies for a reduction in sentence, particularly the additional one-level reduction in subsection (b), based on the defendant's acceptance of responsibility. First, this amendment eliminates many of the considerations currently listed as appropriate to consider in determining whether the defendant qualifies for the two-level reduction under subsection (a), reserving many of those considerations for a determination of whether the defendant qualifies for the additional one-level reduction under subsection (b).

Second, this amendment conditions receipt of the two-level reduction on the timeliness of the defendant's admission of conduct comprising the offense of conviction, the defendant's admission or failure to falsely deny relevant conduct, and the defendant's not having committed, after filing of charges on the instant offense, conduct that, under the totality of the circumstances, negates an inference of acceptance of responsibility. Therefore, obstructive conduct does not automatically preclude receipt of the two-level reduction if the totality of the circumstances indicate that the defendant has accepted responsibility for the offense.

Third, this amendment provides for an additional one-level reduction if the defendant qualifies for the two-level reduction and the defendant has demonstrated extraordinary acceptance of responsibility, based on the sentencing judge's consideration of a variety of considerations, including those listed in Application Note 2, as well as the sentencing judge's consideration of the totality of the circumstances. Finally, the amendment provides a number of options with respect to whether the commission of obstructive conduct or a new offense should disqualify the defendant from receiving the additional one-level reduction.

Proposed Amendment: Section 3E1.1 is amended by deleting it in its entirety and inserting in lieu thereof:

''§ 3E1.1. Acceptance of Responsibility

(a) If the defendant demonstrates acceptance of responsibility for his offense, decrease the offense level by 2 levels.

(b) If the defendant qualifies for a decrease under subsection (a), the offense level determined prior to the operation of subsection (a) is level 16 or greater, and the defendant clearly demonstrates extraordinary acceptance of responsibility, decrease the offense level by 1 additional level.

Commentary

Application Notes

1. A defendant qualifies under subsection (a), if the defendant:

(a) Truthfully admits, in a timely manner, the conduct comprising the offense(s) of conviction, and truthfully admits or does not falsely deny any additional relevant conduct for which the defendant is accountable under § 1B1.3 (Relevant Conduct). Note that a defendant is not required to volunteer, or affirmatively admit, relevant conduct beyond the offense of conviction in order to obtain a reduction under subsection (a). A defendant may remain silent in respect to relevant conduct beyond the offense of conviction without affecting his ability to obtain a reduction under this subsection. However, a defendant who falsely denies, or frivolously contests, relevant conduct that the court determines to be true has acted in a manner inconsistent with acceptance of responsibility; and

(b) Has not, after the filing of charges on the instant offense, committed conduct that, under the totality of the circumstances, negates an inference of acceptance of responsibility. Conduct that may negate an inference of acceptance of responsibility under this paragraph is (1) conduct resulting in an enhancement under § 3C1.1 (Obstructing or Impeding the Administration of Justice), i.e., obstructive conduct, or (2) the commission of an offense by the defendant. Such conduct does not necessarily disqualify the defendant from receiving a reduction in offense level under this section. In determining whether such conduct disqualifies the defendant from receiving a reduction in offense level under this section, the court should consider the nature, seriousness, and timing of the conduct, as well as the extent to which commission of the conduct is inconsistent with acceptance of responsibility.

2. In the case in which the defendant qualifies for the 2-level reduction under subsection (a) and the offense level determined prior to the operation of subsection (a) is level 16 or greater, the court may grant an additional 1-level reduction under subsection (b) if the court determines, under the totality of the circumstances, that the defendant has clearly demonstrated extraordinary acceptance of responsibility. The sentencing judge is in a unique position to make this determination. For this reason, this determination is entitled to great deference on review. In determining whether the defendant has clearly demonstrated extraordinary acceptance of responsibility for purposes of subsection (b), appropriate considerations include the following:

(a) Fully cooperating with the probation officer in the preparation of the presentence report.

Note: This includes appearing for interview as required, providing accurate background information, including information regarding the defendant's juvenile and adult criminal record, and providing complete financial information as requested, in a timely fashion. With respect to discussion of the offense of conviction and

relevant conduct, the provisions set forth in Application Note 1(a) above control.

(b) Timely notifying authorities of his intention to enter a plea of guilty, in a sufficiently prompt manner to permit the government to avoid preparing for trial and to permit the court to allocate its resources efficiently.

Note: The notification to authorities of the intention to plead guilty should occur particularly early in the case. For example, a defendant who pleads guilty one day before his scheduled trial date may qualify under subsection (a), but such plea will not ordinarily be timely enough to constitute an indicia of extraordinary acceptance of responsibility under this paragraph.

[(c) Voluntary termination or withdrawal from criminal conduct or associations;]

[(d) Voluntary payment of restitution prior to adjudication of guilt;]

[(e) Voluntary surrender to authorities promptly after commission of the offense;]

[(f) Voluntary assistance to authorities in the recovery of the fruits and instrumentalities of the offense;]

[(g) Voluntary resignation from the office or position held during the commission of the offense;]

[(h) Post-offense rehabilitative efforts (e.g., counseling or drug treatment); and]

[(i) Voluntary stipulation to administrative deportation, in the case of a deportable alien].

The defendant may qualify for the additional 1-level decrease under subsection (b) without satisfying all of the factors listed in this Application Note. However, satisfaction by the defendant of one or more of the factors listed in this Application Note will not be sufficient under subsection (b) if the court determines that, under the totality of the circumstances, the defendant has not clearly demonstrated extraordinary acceptance of responsibility.

A defendant who, after the filing of charges on the instant offense, commits obstructive conduct or a new offense [may not receive the additional 1-level decrease under subsection (b)] [ordinarily will not qualify for the additional 1-level decrease under subsection (b)] [will qualify for the additional 1-level decrease under subsection (b) only in an extraordinary case].

3. A reduction in offense level under this section is not intended to apply to a defendant who puts the government to its burden of proof at trial by denying the essential factual elements of guilt, is convicted, and only then admits guilt and expresses remorse. Conviction by trial, however, does not automatically preclude a defendant from consideration for such a reduction. In rare situations a defendant may clearly demonstrate an acceptance of responsibility for his criminal conduct even though he exercises his constitutional right to a trial. This may occur, for example, where a defendant goes to trial to assert and preserve issues that do not relate to factual guilt (e.g., to make a constitutional challenge to a statute or a challenge to the applicability of a statute to his conduct). In each such instance, however, a determination that a defendant has accepted responsibility will be based primarily upon pre-trial statements and conduct.

Background: Subsection (a) provides a 2-level decrease in offense level. Subsection (b) provides an additional 1-level decrease for a defendant at offense level 16 or greater prior to operation of subsection (a) who both qualifies for a decrease under subsection (a) and clearly demonstrates extraordinary acceptance of responsibility based on the factors listed in Application Note 2 or equivalent factors. Subsection (b) does not apply, however, to a defendant whose offense level is level 15 or lower prior to application of subsection (a). The reduction in the guideline range provided by a 2-level decrease in offense level under subsection (a) is sufficient at offense level 15 or lower because the 2-level decrease provides a greater proportional reduction in the guideline range than at higher offense levels due to the structure of the Sentencing Table.

The reduction of offense level provided by this section recognizes legitimate societal interests. A defendant who timely demonstrates acceptance of responsibility for his offense is appropriately given a lower offense level than a defendant who has not demonstrated acceptance of responsibility. A defendant who further demonstrates extraordinary acceptance of responsibility is likewise deserving of additional recognition of his extraordinary acceptance.''.

Section 3E1.1 Acceptance of Responsibility

25. Synopsis of Proposed Amendment: This amendment clarifies that the commission of a new offense while pending trial or sentencing on the instant offense is a negative indicant of acceptance of responsibility. This provision does not require that the new offense be related or similar to the instant offense. Currently, there is a circuit split on this issue. Compare *United States* v. *Morrison*, 983 F.2d 730 (6th Cir. 1993)(consideration of post-indictment theft and positive drug test inappropriate in determining whether defendant accepted responsibility for firearms violations) with, e.g., *United States* v. *Watkins*, 911 F.2d 983 (5th Cir. 1990)(upholding denial of acceptance for defendant convicted of possessing stolen treasury checks who used cocaine pending sentencing).

Proposed Amendment: The Commentary to § 3E1.1 captioned ''Application Notes'' is amended in Note 4 by inserting the following as the last sentence:

''Similarly, the commission of an offense by the defendant while pending trial or sentencing on the instant offense, whether or not that offense is similar to the instant offense, ordinarily indicates that the defendant has not accepted responsibility for the instant offense.''.

Section 3E1.1 Acceptance of Responsibility

26. Synopsis of Proposed Amendment: This amendment revises § 3E1.1 (Acceptance of Responsibility) to remove the restriction that currently prohibits the application of the additional 1-level decrease in subsection (b) for offense levels 15 and lower. This amendment would allow consideration of the additional 1-level decrease for defendants at all offense levels. Consequently, eligibility for alternatives to incarceration would be increased for defendants at offense levels of 15 or less who receive a 3 level reduction for acceptance of responsibility.

Proposed Amendment: Section 3E1.1(b) is amended by deleting ''the offense level determined prior to the operation of subsection (a) is level 16 or greater, and the defendant'' and inserting in lieu thereof ''and''.

The Commentary to § 3E1.1 captioned ''Application Notes'' is amended in Note 6 by deleting ''at offense level 16 or greater prior to the operation of subsection (a)''.

The Commentary to § 3E1.1 captioned ''Background'' is amended in the second paragraph by deleting ''at offense level 16 or greater prior to operation of subsection (a)''; and by deleting ''Subsection (b) does not apply, however, to a defendant whose offense level is level 15 or lower prior to application of subsection (a). At offense level 15 or lower, the reduction in the guideline range provided by a 2-level decrease in offense level under subsection (a) (which is a greater proportional reduction in the guideline range than at higher offense levels due to the structure of the Sentencing Table) is adequate for the court to take into account the factors set forth in

subsection (b) within the applicable guideline range.''.

Section 4B1.3 is amended by deleting ''13, unless § 3E1.1 (Acceptance of Responsibility) applies, in which event his offense level shall be not less than 11'' and inserting ''level 13 (decreased by any applicable adjustment from § 3E1.1 (Acceptance of Responsibility)).''.

Section 4B1.2 Definitions of Terms Used in Section 4B1.1

27. Synopsis of Proposed Amendment: This amendment resolves a circuit conflict with respect to definitions of terms used in the Chapter Four career offender guideline and addresses several related issues.

(1) Miscellaneous Controlled Substance Offenses—This amendment addresses the question of whether the offenses of possessing a listed chemical with intent to manufacture a controlled substance or possessing a prohibited flask or equipment with intent to manufacture a controlled substance are ''controlled substance offenses'' under the career offender guideline. A panel of the Fifth Circuit concluded that possession of a listed chemical with intent to manufacture a controlled substance is a controlled substance offense under § 4B1.2. *U.S.* v. *Calverley,* 11 F.3d 505 (5th Cir. 1993). (The panel questioned the precedent on which the decision was based and recommended reconsideration en banc; on reconsideration en banc, the Fifth Circuit declined to address the merits of the issue.) In contrast, the Tenth Circuit has concluded that possession of a listed chemical with intent to manufacture a controlled substance is not a controlled substance offense. *United States* v. *Wagner,* 994 F.2d 1467, 1475 (10th Cir. 1993). This amendment makes such offenses a ''controlled substance offense'' under the career offender guideline. There seems such an inherent connection between possession of a listed chemical or prohibited flask or equipment with intent to manufacture a controlled substance and actually manufacturing a controlled substance that the former offenses are fairly considered as controlled substance trafficking offenses.

(2) Additional Related Issues—The first related issue is whether the Commission should amend § 4B1.2 to clarify that certain offenses are ''crimes of violence'' or ''controlled substance offenses'' if the offense of conviction established that the underlying offense was a ''crime of violence'' or ''controlled substance offense.'' See *United States* v. *Baker,* 16 F.3d 854 (8th Cir. 1994); *United States* v. *Vea-Gonzalez,* 999 F.2d 1326 (9th Cir. 1993), effectively overruled on other grounds by *Custis* v. *United States,* 114 S.Ct. 1732 (1994).

The second issue is whether to make the following nonsubstantive changes to § 4B1.2 to improve the internal consistency of the guidelines: (A) adding the phrase ''punishable by imprisonment for a term exceeding one year'' in subsection (2) to make it consistent with subsection (1); and (B) conforming the second paragraph of Application Note 2 of § 4B1.2 to the language of §§ 2K1.3 and 2K2.1.

Proposed Amendment: Section § 4B1.2(1) is amended by inserting a ',' immediately after ''state law'' and immediately after ''one year'';

By redesignating ''§ 4B1.2(1)'' as ''§ 4B1.2(a)''; by redesignating ''(i)'' as ''(1)'' and redesignating ''(ii)'' as ''(2)''.

Section § 4B1.2(2) is amended by deleting ''a'' immediately after ''under'';

By deleting ''prohibiting'' and inserting in lieu thereof '', punishable by imprisonment for a term exceeding one year, that prohibits'' and by redesignating ''(2)'' as ''(b)''.

Section § 4B1.2(3) is amended by redesignating ''(A)'' as ''(1)'', redesignating ''(B)'' as ''(2)'' and by redesignating ''§ 4B1.2(3)'' as ''§ 4B1.2(c)''.

The Commentary to § 4B1.2 captioned ''Application Notes'' is amended in Note 1 by inserting at the beginning ''For purposes of this guideline-'';

By deleting ''The terms 'crime' '' and inserting in lieu thereof '' 'Crime' ''.

The Commentary to § 4B1.2 captioned ''Application Notes'' is amended in Note 2 by deleting in the second sentence ''whereas'' immediately following ''included'' and inserting in lieu thereof ''as 'crimes of violence' if'';

By deleting the last sentence from the first paragraph;

By deleting from the first sentence of the second paragraph ''The term 'crime' '' and inserting in lieu thereof '' 'Crime' '';

By deleting in the second sentence of the second paragraph ''has'' immediately following ''if the defendant'' and inserting in lieu thereof ''had'';

And by inserting at the end the following:

''Unlawfully possessing a listed chemical with intent to manufacture a controlled substance (21 U.S.C. § 841(d)(1)) is a 'controlled substance offense.'

Unlawfully possessing a prohibited flask or equipment with intent to manufacture a controlled substance (21 U.S.C. § 843(a)(6)) is a 'controlled substance offense.'

Maintaining any place for the purpose of facilitating a drug offense (21 U.S.C. § 856) is a 'controlled substance offense' if the offense of conviction established that the underlying offense (the offense facilitated) was a 'controlled substance offense.'

Using a communications facility in committing, causing, or facilitating a drug offense (21 U.S.C. § 843(b)) is a 'controlled substance offense' if the offense of conviction established that the underlying offense (the offense committed, caused, or facilitated) was a 'controlled substance offense.'

Possessing a firearm during and in relation to a crime of violence or drug offense (18 U.S.C. § 924(c)) is a 'crime of violence' or 'controlled substance offense' if the offense of conviction established that the underlying offense (the offense during and in relation to which the firearm was carried or possessed) was a 'crime of violence' or 'controlled substance offense.' Note that if the defendant also was convicted of the underlying offense, the two convictions will be treated as related cases under § 4A1.2 (Definitions and Instruction for Computing Criminal History)).''.

The Commentary to § 4B1.2 captioned ''Application Notes'' is amended by deleting the numbers corresponding to Notes ''2'' and ''3''; and by inserting the following as new Note 2:

''2. Section 4B1.1 (Career Offender) expressly provides that the instant and prior offenses must be crimes of violence or controlled substance offenses of which the defendant was convicted. Therefore, in determining whether an offense is a crime of violence or controlled substance for the purposes of § 4B1.1 (Career Offender), the offense of conviction (i.e., the conduct of which the defendant was convicted) is the focus of inquiry.''.

The Commentary to § 4B1.2 captioned ''Application Notes'' is amended by redesignating Note 4 as Note 3.

28. Issue for Comment: The Commission requests public comment on whether, and in what manner, it should address by amendment the following circuit court conflicts:

(1) Whether an upward departure may be based on dismissed or uncharged conduct that is related to the offense of conviction but is not relevant conduct. Compare *United States* v. *Figaro,* 935 F.2d 4 (1st Cir. 1991) (permitting consideration of uncharged conduct related to the offense of conviction); *United States* v. *Kim,* 896 F.2d 678 (2d Cir. 1990) with *United States* v. *Thomas,* 961 F.2d 1110 (3d Cir. 1992) (court cannot consider uncharged conduct).

(2) Whether information provided in connection with a § 1B1.8 agreement

may be placed in the presentence report or used to affect conditions of confinement. (Amendment would implicate § 1B1.8 (Use of Certain Information).) Compare *United States* v. *Marsh,* 963 F.2d 72, 74 (5th Cir.1992) (implying court may receive information); *United States* v. *Malvito,* 946 F.2d 1066, 1068 (4th Cir.1991) (same) with *United States* v. *Abanatha,* 999 F.2d 1246, 1249 (8th Cir. 1993), cert. denied 114 S.Ct. 1549 (1994) (information should not be included in PSR because the Fifth Amendment precludes information from being considered at sentencing or allowed to affect conditions of confinement).

(3) Whether drug quantities possessed for personal use should be aggregated with quantities distributed or possessed with intent to distribute. (Amendment would implicate § 1B1.3 and § 2D1.1.) Compare *United States* v. *Antonietti,* 86 F.3d 206, 209 (11th Cir.); *United States* v. *Innamorati,* 996 F.2d 456, 492 (1st Cir. 1993), cert. denied, 510 U.S. 955 (1993) with *United States* v. *Rodriquez-Sanchez,* 23 F.3d 1488 (9th Cir. 1994) (personal use amounts are not same course of conduct as quantities possessed for distribution).

(4) Whether a federal prison camp is a ''similar facility'' under § 2P1.1(b)(3). Compare *United States* v. *Hillstrom,* 988 F.2d 448 (3d Cir. 1993), cert. denied, 115 S. Ct. 1382 (1995) with *United States* v. *Sarno,* 24 F.3d 618 (4th Cir. 1994) (minimum security prison is a secure facility); *United States* v. *Tapia,* 981 F.2d 1194 (11th Cir.), cert. denied, 113 S. Ct. 2979 (1993). (Although the Third Circuit initially disagreed with the Fourth, Fifth, Ninth, Tenth, and Eleventh circuits, the district court on remand held that a federal prison camp is not a ''similar facility'' within the meaning of the escape guideline. *United States* v. *Hillstrom,* 837 F.Supp. 1324 (M.D.Pa. 1993); aff'd, 37 F.3d 1490 (unpublished).).

(5) Whether the two-level enhancement at § 2F1.1(b)(3)(A) requires that the defendant misrepresent his authority to act on behalf of a charitable or governmental organization. Compare *United States* v. *Frazier,* 53 F.3d 1105, 1123–13 (10th Cir. 1995) (enhancement does not apply to chairman of educational organization who misapplied funds because he made no misrepresentation of his authority to act on behalf of the organization) with *United States* v. *Marcum,* 16 F.3d 599, 603 (4th Cir.), cert. denied, 115 S. Ct. 137 (1994) (applying enhancement to president of charitable organization who embezzled fund from the organization).

(6) Whether ''victim of the offense'' under § 3A1.1 refers only to victim of the offense of conviction or to victim of any relevant conduct. Compare *United States* v. *Echevarria,* 33 F.3d 175 (2d Cri. 1994) (vulnerable victim need not be victim of the offense of conviction); *United States* v. *Roberson,* 872 F.2d 597 (5th Cir.), cert. denied, 493 U.S. 961 (1989) with *United States* v. *Dixon,* 66 F.3d 133 (6th Cir. 1995); *United States* v. *Wright,* 12 F.3d 70 (6th Cir. 1993), cert. denied 116 S. Ct. 320 (1995).

(7) Whether a defendant's failure to admit to use of a controlled substance amounts to willful and material obstruction of justice under § 3C1.1 (Obstruction of Justice). Compare *United States* v. *Garcia,* 20 F.3d 670 (6th Cir. 1994), cert. denied, 115 S. Ct. 1120 (1995) with *United States* v. *Belletiere,* 971 F.2d 961 (3d Cir. 1992); *United States* v. *Thompson,* 944 F.2d 1331 (7th Cir. 1991), cert. denied, 502 U.S. 1097 (1992).

(8) Whether time in a community treatment center is a ''sentence of imprisonment'' under § 4A1.2(e)(1). Compare *United States* v. *Rasco,* 963 F.2d 132 (6th Cir.), cert. denied 113 S. Ct. 238 (1992) (detention in community treatment facility following revocation of parole is ''incarceration''); *United States* v. *Vanderlaan,* 921 F.2d 257 (10th Cir. 1990), cert. denied, 499 U.S. 954 (1991) (placement in federal special treatment facility during period of commitment to federal prison is confinement and is considered ''sentence of imprisonment'') with *United States* v. *Latimer,* 991 F.2d 1509 (9th Cir. 1993) (placement in community treatment facility following revocation of parole is not considered ''incarceration''); *United States* v. *Urbizu,* 4 F.3d 636 (8th Cir. 1993) (dicta) (placement in halfway house not categorized as confinement).

(9) Whether convictions that are erased for reasons unrelated to innocence or errors of law (regardless of whether they are termed by statute as ''set aside'' or ''expunged'') should be counted for purposes of criminal history. (Amendment would implicate § 4A1.2, comment. n. 10). Compare *United States* v. *McDonald,* 991 f.2d 866 (D.C. Cir. 1993) (examining effect of set aside D.C. Youth Rehabilitation Act conviction and noting it is automatic and unrelated to innocence) with *United States* v. *Beaulieau,* 959 F.2d 375 (2d Cir. 1992) (do not count conviction where Vermont set aside statute intended to erase conviction from record; such a set aside is equivalent to expungement); *United States* v. *Hidalgo,* 932 F.2d 805 (9th Cir. 1991) (do not count conviction subject to California Youth Act set aside provision releasing youth from all penalties and disabilities; treat as an expungement provision).

(10) Whether a court may impose a fine for costs of imprisonment under § 5E1.2(c). Compare *United States* v. *Sellers,* 42 F.3d 116 (2d Cir. 1994), cert. denied, 116 S. Ct. 93 (1995) (§ 5E1.2 does not require district court to impose a punitive fine in order to impose a fine for costs of imprisonment); *United States* v. *Turner,* 998 F.2d 534 (7th Cir.), cert. denied, 114 S. Ct. 639 (1993) with *United States* v. *Corral,* 964 F.2d 83 (1st Cir. 1992) (court cannot impose fine for cost of imprisonment when defendant is indigent); *United States* v. *Labat,* 915 F.2d 603 (10th Cir. 1990) (cost of imprisonment is additional fine that cannot be imposed unless court first imposes a punitive fine).

(11) Whether a departure above a statutorily required minimum sentence should be measured from a defendant's guideline range or the applicable mandatory minimum. (Amendment would implicate §§ 5G1.1, 5K2.0, 4A1.3.) Compare *United States* v. *Carpenter,* 963 F.2d 736 (5th Cir. 1992) (appropriate for court to depart upwards from the range within which the mandatory minimum falls); *United States* v. *Doucette.* 979 F.2d 1042, 1047 (5th Cir. 1992) with *United States* v. *Rodriguez-Martinez,* 25 F.3d 797 (9th Cir. 1994) (if the court determines that a departure above a mandatory minimum is warranted, it should calculate the departure from the defendant's guideline range).

(12) Whether the district court can depart to the career offender level based on the defendant's criminal history, although the defendant does not otherwise qualify for the career offender enhancement. Compare *United States* v. *Ruffin,* 997 F.2d 343, 347 (7th Cir. 1993)(''Only real convictions support a sentence under § 4B1.1.''); *United States* v. *Faulkner,* 952 F.2d 1066, 1072–73(9th Cir. 1991)(career offender guidelines operate as an ''on/off'' switch and cannot be used for departure purposes if defendant does not qualify as a career offender) with *United States* v. *Cash,* 983 F.2d 558, 562 (4th Cir. 1992)(departure reasonable when defendant would be career offender but for constitutional invalidity of one prior conviction; § 4A1.3's level by level consideration is implicit in the departure); *United States* v. *Hines,* 943 F.2d 348, 354–55 (4th Cir. 1991)(departure reasonable when defendant's two prior murder convictions were consolidated for sentencing).

(13) Whether multiple criminal incidents occurring over a period of time may constitute a single act of

aberrant behavior warranting departure. Compare *United States* v. *Grandmaison,* 77 F.3d 555 (1st Cir. 1996) (includes multiple acts leading up to the defendant's commission of the offense); *United States* v. *Takai,* 941 F.2d 738 (9th Cir. 1991) (multiple incidents over six-week period can be ''single act of aberrant behavior'') with *United States* v. *Marcello,* 13 F.3d 752 (3d Cir. 1994) (requires spontaneous, thoughtless, single act involving lack of planning); *United States* v. *Williams,* 974 F.2d 25 (5th Cir. 1992), cert. denied, 507 U.S. 934 (1993) (same).

(14) Whether collateral consequences of a defendant's conviction can be the basis of a downward departure. Compare *United States* v. *Smith,* 27 F.3d 649 (D.C. Cir. 1994) (objectively more serious prison conditions faced by deportable aliens may warrant downward departure) with *United States* v. *Sharapan,* 13 F.3d 781 (3d Cir. 1994) (demise of defendant's business, employees' loss of jobs, and economic harm do not support downward departure); *United States* v. *Restreppo,* 999 F.2d 640 (2d Cir.), cert. denied, 114 S. Ct. 405 (1993) (disallowing departure based on collateral consequences of being a deportable alien).

(15) Whether the definition of ''violent offense'' under § 5K2.13 (Diminished Capacity) is the same as ''crime of violence'' under § 4B1.2. Compare *United States* v. *Poff,* 926 F.2d 588 (7th Cir.), cert. denied, 502 U.S. 827 (1991); *United States* v. *Maddalena,* 893 F.2d 815 (6th Cir. 1990), cert. denied, 502 U.S. 882 (1991) with *United States* v. *Weddle,* 30 F.3d 532 (4th Cir. 1994); *United States* v. *Chatman,* 986 F.2d 1446 (D.C. Cir. 1993)

Section 5B1.3 Conditions of Probation

29(A). Synopsis of Proposed Amendment: This amendment revises §§ 5B1.3, 5B1.4, and 5D1.3 to reflect required conditions of probation and supervised release that have been added by the Antiterrorism and Effective Death Penalty Act of 1996 and other statutory provisions. Section 5B1.4 is amended to list both statutorily required and discretionary conditions in a way that will facilitate their application in individual cases.

Proposed Amendment: Section 5B1.3(a) is amended by deleting:

''(a) If a term of probation is imposed, the court shall impose a condition that the defendant shall not commit another federal, state, or local crime during the term of probation. 18 U.S.C. § 3563(a)(1). The court shall also impose a condition that the defendant not possess illegal controlled substances. 18 U.S.C. § 3563(a)(3).''

And inserting in lieu thereof:

''(a) If a term of probation is imposed, the court is required by statute to impose the following conditions:

(1) That the defendant not commit another federal, state, or local crime during the term of probation. 18 U.S.C. § 3563(a)(1). This condition is reflected in § 5B1.4(a) (condition #1);

(2) That the defendant not unlawfully possess a controlled substance. 18 U.S.C. § 3563(a)(3). This condition is reflected in a broader form in § 5B1.4(a) (condition #8);

(3) In the case of a defendant convicted for the first time of a domestic violence crime, as defined in 18 U.S.C. § 3561(b), that the defendant attend a public, private, or private nonprofit offender rehabilitation program that has been approved by the court, in consultation with the State Coalition Against Domestic Violence or other appropriate experts, if an approved program is readily available within a 50-mile radius of the legal residence of the defendant. 18 U.S.C. § 3563(a)(4). This condition is reflected in a broader form in § 5B1.4(b) (condition #25);

(4) That the defendant refrain from any unlawful use of a controlled substance and submit to one drug test within 15 days of release on probation and at least two periodic drug tests thereafter (as determined by the court) for use of a controlled substance, but the condition stated in this paragraph may be ameliorated or suspended by the court for any individual defendant if the defendant's presentence report or other reliable sentencing information indicates a low risk of future substance abuse by the defendant. 18 U.S.C. § 3563(a)(5). This condition is reflected in a broader form in § 5B1.4(a) (condition #8) and § 5B1.4(b) (conditions #22 and #23);

(5) That the defendant make restitution in accordance with 18 U.S.C. §§ 2248, 2259, 2264, 2327, 3663, 3663A, and 3664. 18 U.S.C. § 3563(a)(6)(A). This condition is reflected in a broader form in § 5B1.4(b) (condition #18);

(6) That the defendant pay the special assessment imposed under 18 U.S.C. § 3013. 18 U.S.C. § 3563(a)(6)(B). This condition is reflected in § 5B1.4(a) (condition #15);

(7) That the defendant notify the court of any material change in the defendant's economic circumstances that might affect the defendant's ability to pay restitution, fines, or special assessments. 18 U.S.C. § 3563(a)(7). This condition is reflected in § 5B1.4(a) (condition #16);

(8) If the court has imposed a fine, that the defendant pay the fine or adhere to a court-established installment schedule. 18 U.S.C. § 3563(a). This condition is reflected in § 5B1.4(b) (condition #19).''.

Section 5B1.3(b) is renumbered as § 5B1.3(c); and § 5B1.3(c) is renumbered as § 5B1.3(b).

Section 5B1.3(b) (formerly (c)) is amended by deleting ''a fine,''; and by inserting ''(pertaining to discretionary conditions of probation)'' immediately after ''3563(b)''.

Section 5B1.3(c) (formerly (b)) is amended by deleting ''Recommended conditions are set forth in § 5B1.4.''.

Section 5B1.3(d) is amended by inserting at the ''This condition is reflected in § 5B1.4(c) (condition #31).''.

Section 5B1.3 is amended by inserting after subsection (d) the following new subsection:

''(e) Recommended conditions of probation are set forth in § 5B1.4 (Recommended Conditions of Probation and Supervised Release).''.

The Commentary to § 5B1.3 is deleted in its entirety, including the title.

Section 5B1.4(a) is amended by deleting ''(1–13)''; by deleting ''generally''; by deleting ':'' and inserting in lieu thereof ''.'' and by inserting at the end the following ''A condition (or a part of a condition) designated by an asterisk may be statutorily required in all or some cases:''.

Section 5B1.4(a) is amended by renumbering subdivisions (1) through (13) as subdivisions (2) through (14), respectively; and by inserting before subdivision (2) (formerly (a)(1)) the following: ''(1) the defendant shall not commit another federal, state, or local crime;*''

Section 5B1.4(a)(5) (formerly (a)(4)) is amended by deleting ''his'' and inserting in lieu thereof ''the defendant's''; and by inserting immediately following ''responsibilities'' the following: ''(including, but not limited to, complying with the terms of any court order or administrative process pursuant to the law of a state, the District of Columbia, or any other possession or territory of the United States requiring payments by the defendant for the support and maintenance of any child or of a child and the parent with whom the child is living)''.

Section 5B1.4(a)(7) (formerly (a)(6)) is amended by deleting ''within seventy-two hours of'' and inserting in lieu thereof ''at least ten days prior to''; and by deleting ''in'' and inserting in lieu thereof ''of''.

Section 5B1.4(a)(8) (formerly (a)(7)) is amended by deleting ''narcotic or other''; by deleting ''such'' and inserting

in lieu thereof ''any controlled''; by deleting ''substance'' and inserting in lieu thereof ''substances''; and by inserting an asterisk immediately following ''physician;''.

Section 5B1.4(a)(11) (formerly (a)(10)) is amended by deleting ''him'' and inserting in lieu thereof ''the defendant''.

Section 5B1.4(a)(14) (formerly (a)(13)) is amended by deleting ''.'' at the end and inserting in lieu thereof '';''.

Section 5B1.4(a) is amended by inserting at the end the following new subdivisions (15) and (16):

''(15) The defendant shall pay the special assessment imposed or adhere to a court-ordered installment schedule for the payment of the special assessment;*

(16) The defendant shall notify the probation officer of any material change in the defendant's economic circumstances that might affect the defendant's ability to pay any unpaid amount of restitution, fines, or special assessments.*''.

Section 5B1.4(b) is amended by deleting in the first sentence ''(14–24)''; by deleting ''either''; by deleting ''or required by law under'' and inserting in lieu thereof ''in''; by deleting '', or may be appropriate in a particular case'' and inserting in lieu thereof ''and, in addition, may otherwise be appropriate in particular cases. A condition (or a part of a condition) designated by an asterisk may be statutorily required in all or some cases''; and by renumbering subdivisions (14) through (18) as (17) through (21) respectively; by renumbering subdivisions (19) through (22) as (26) through (29), respectively; and by renumbering subdivision (23) as subdivision (22); and by renumbering subdivision (25) as subdivision (30).

Section 5B1.4(b)(17) (formerly (b)(14)) is amended by deleting '', it is recommended that the court impose'' and inserting in lieu thereof ''—''.

Section 5B1.4(b)(18) (formerly (b)(15)) is amended by deleting ''of'' immediately following ''order'' and inserting in lieu thereof ''or condition requiring''; by deleting '' it is recommended that the court impose'' and inserting in lieu thereof ''—''; by deleting ''See § 5E1.1 (Restitution).'' and by inserting in lieu thereof an asterisk; ; and by inserting at the end the following new paragraph:

''If any restitution obligation remains unpaid at the commencement of a term of supervised release, it shall be a condition of supervised release that the defendant pay any such restitution in accordance with the schedule of payments ordered by the court.''.

Section 5B1.4(b)(19) (formerly (b)(16)) is amended by deleting '', it is recommended that the court impose'' and inserting in lieu thereof ''—''; by inserting an asterisk after ''the fine.''; and by adding at the end the following new paragraph:

''If any fine obligation remains unpaid at the commencement of a term of supervised release, it shall be a condition of supervised release that the defendant pay any such fine in accordance with the schedule of payments ordered by the court.''

Section 5B1.4(b) is amended by inserting after subdivision (22) (formerly subdivison (b)(23)) the following new subdivision (23):

''(23) Drug Testing.

Unless the court determines that there is a low risk of future substance abuse by the defendant—a condition requiring the defendant to submit to one drug test within fifteen days of release on [probation][supervised release] and at least two periodic drug tests thereafter, as determined by the court.*

Note: This condition is not necessary if the substance abuse program participation condition (condition #22) is imposed.''.

Section 5B1.4(b)(20) (formerly (b)(17)) is amended by deleting '', it is recommended that the court impose'' and inserting in lieu thereof ''——''.

Section 5B1.4(b)(21) (formerly (b)(18)) is amended by deleting '', it is recommended that the court impose'' and inserting in lieu thereof ''——''.

Section 5B1.4(b)(22) (formerly (b)(23)) is amended by deleting '', it is recommended that the court impose'' and inserting in lieu thereof ''—''.

Section 5B1.4(b)(24) is amended by deleting '', it is recommended that the court impose'' and inserting in lieu thereof ''——''.

Section 5B1.4(b) is amended by inserting the following as new subdivision (25):

''(25) Domestic Violence Program Participation.

In the case of a defendant convicted of a domestic violence crime, as defined in 18 U.S.C. § 3561(b), a condition requiring the defendant to attend a public, private, or private nonprofit offender rehabilitation program that has been approved by the court, in consultation with the State Coalition Against Domestic Violence or other appropriate experts, if an approved program is readily available within a 50-mile radius of the legal residence of the defendant.*''

Section 5B1.4 is amended by inserting the following immediately after new subdivision (25);

''(c) Additional Conditions.

The following ''special conditions'' may be appropriate on a case-by-case basis:''

Section 5B1.4 (c)(30) (formerly (b)(25)) is amended by deleting ''If'' and inserting in lieu thereof ''A condition imposing a curfew may be imposed if''; and by deleting '', a condition of curfew is recommended''.

Section 5B1.4 is amended by inserting after subdivision (30) (formerly subdivision (b)(25)) the following new subdivision:

''(31) Intermittent Confinement

Intermittant confinement (custody for intervals of time) may be ordered as a condition of probation during the first year of probation.

Note: This condition may not be order as a condition of supervised release.''.

The commentary to 5B1.4 captioned ''Application Note'' is amended in Note 1 by deleting ''his'' wherever it appears and inserting in lieu thereof ''the defendant's''; and by inserting in the last sentence a comma immediately following ''home detention''.

Section 5D1.3 is amended by deleting subsection (a) in its entirety and inserting in lieu thereof:

''(a) If a term of supervised release is imposed, the court is required by statute to impose the following conditions:

(1) that the defendant not commit another federal, state, or local crime during the term of supervised release. 18 U.S.C. § 3583 (d). This condition is reflected in § 5B1.4(a) (condition #1);

(2) that the defendant not unlawfully possess a controlled substance. 18 U.S.C. § 3583 (d). This condition is reflected in § 5B1.4(a) (condition #8);

(3) in the case of a defendant convicted for the first time of a domestic violence crime, as defined in 18 U.S.C. § 3561(b), that the defendant attend a public, private, or private nonprofit offender rehabilitation program that has been approved by the court, in consultation with the State Coalition Against Domestic Violence or other appropriate experts, if an approved program is readily available within a 50-mile radius of the legal residence of the defendant. 18 U.S.C. § 3583(d). This condition is reflected in § 5B1.4(b) (condition #25);

(4) that the defendant refrain from any unlawful use of a controlled substance and submit to one drug test with 15 day of release on supervised release and at least two periodic drug tests thereafter (as determined by the court) for use of a controlled substance, but this condition may be ameliorated or suspended by the court for any individual defendant if the defendant's presentence report or other reliable sentencing information indicates a low risk of future substance abuse by the defendant. 18 U.S.C. § 3583(d). This

condition is reflected in a broader form in § 5B1.4(a) (condition #8), and § 5B1.4(b) (conditions #22 and #23).''.

Section 5D1.3(b) is amended by deleting ''§ 3353(a)(2) and''.

Section 5D1.3(c) is amended by inserting ''(Recommended Conditions of Probation and Supervised Release)'' immediately following ''§ 5B1.4''.

The Commentary to 5D1.3 captioned ''Background'' is amended by deleting the fourth sentence.

Section 8D1.3(a) is amended by deleting ''shall'' following ''the organization''.

Section 8D1.3 is amended by redesignating subsection (c) as subsection (g); and by inserting after subsection (b) the following new subsections:

(c) Pursuant to 18 U.S.C. § 3563(a)(6)(A), any sentence of probation shall include the condition that the defendant make restitution in accordance with 18 U.S.C. § 2248, 2259, 2327, 3663, 3663A, and 3664.

(d) Pursuant to 18 U.S.C. § 3563(a)(6)(B), any sentence of probation shall include the condition that the defendant pay the special assessment imposed under 18 U.S.C. § 3013.

(e) Pursuant to 18 U.S.C. § 3563(a)(7), any sentence of probation shall include the condition that the defendant notify the court of any material change in the defendant's economic circumstances that might affect the defendant's ability to pay restitution, fines, or special assessments.

(f) Pursuant to 18 U.S.C. § 3563(a), if the court has imposed a fine, any sentence of probation shall include the condition that the defendant pay the fine or adhere to a court-established installment schedule.

B. *Issue for Comment:* The Commission invites comment as to whether §§ 5B1.3 (Conditions of Probation), 5B1.4 (Recommended Conditions of Probation and Supervised Release (Policy Statements)), and 5D1.3 (Conditions of Supervised Release) should be reorganized so as to better distinguish between the statutorily required, standard, and special conditions of probation and supervised release. For example, one option could be to delete § 5B1.4 and amend §§ 5B1.3 and 5D1.3 so that subsection (a) of each guideline lists all the statutorily required conditions of probation or supervised release, subsection (b) lists all the standard conditions, and subsection (c) lists all the optional conditions.

Section 5D1.2 Term of Supervised Release

30. Synopsis of Proposed Amendment: This amendment amends § 5D1.2 (Term of Supervised Release) to make clear that a defendant who qualifies under the ''safety valve'' (§ 5C1.2, 18 U.S.C. § 3553(f)) is not subject to any statutory minimum term of supervised release. This issue has arisen in a number of hotline calls. This amendment also clarifies that the requirement in subsection (a), with respect to the length of a term of supervised release, is subject to the requirement in subsection (b) that the term be not less than any statutorily required term of supervised release.

Proposed Amendment: Section 5D1.2(a) is amended by deleting ''If'' and inserting in lieu thereof ''Subject to subsection (b), if''.

Section 5D1.2(b) is amended by deleting ''The'' and inserting in lieu thereof ''Provided, that the''.

The Commentary to § 5D1.2 is amended by inserting the following immediately before ''Background'':

''Application Note:

1. In the case of a defendant who qualifies under § 5C1.2 (Limitation on Applicability of Statutory Minimum Sentence in Certain Cases), the term of supervised release is to be determined under subsection (a) without regard to any otherwise applicable statutory minimum term of supervised release; i.e., the requirement in subsection (b) is inapplicable in such a case because a statutory minimum term of supervised release no longer applies to that defendant.''.

Section 5E1.1 Restitution

31(A). Synopsis of Proposed Amendment: This amendment conforms the provisions of § 5E1.1 to the mandatory restitution provisions of the Antiterrorism and Effective Death Penalty Act of 1996. Because the new restitution provisions have ex post facto provisions that cannot be addressed in the usual fashion (by determining whether the final Chapter Five guideline range is greater), a separate provision is set forth as a special instruction to address this issue and allow the maintenance of the Commission's ''one book'' rule.

Proposed Amendment: Section 5E1.1(a)(1) is amended by inserting ''in the case of an identifiable victim of the offense for the full amount of the victim's loss,'' immediately following ''restitution order''; by deleting ''§ '' immediately after ''18 U.S.C.''; by inserting ''2248, § 2259, § 2264, § 2327, § '' immediately before ''3663''; and by deleting ''-3664'' and inserting in lieu thereof '', or § 3663A''.

Section 5E1.1(a)(2) is amended by inserting ''impose a term of probation or supervised release with a condition requiring restitution in the case of an identifiable victim of the offense for the full amount of the victim's loss,'' immediately before ''if a restitution''; by deleting ''§ '' immediately following ''18 U.S.C.''; by deleting ''-3664'' immediately following ''3663''; by deleting ''set forth in'' and inserting in lieu thereof ''under''; by inserting ''21 U.S.C. § 841, § 848(a), § 849, § 856, § 861, or § 863,'' immediately following ''States Code,''; and by deleting '', impose a term of probation or supervised release with a condition requiring restitution''.

Section 5E1.1(b) is amended by deleting it in its entirety and inserting in lieu thereof:

''(b) Provided, that the provisions of subsection (a) do not apply—

(1) when full restitution has been made; or

(2) in the case of a restitution order under § 3663; a restitution order under 18 U.S.C. § 3663A that pertains to an offense against property described in 18 U.S.C. § 3663A(c)(1)(A)(ii); or a condition of restitution imposed pursuant to subsection (a)(2) above, to the extent the court finds, from facts on the record, that (1) the number of identifiable victims is so large as to make restitution impracticable, or (2) determining complex issues of fact related to the cause or amount of the victim's losses would complicate or prolong the sentencing process to a degree that the need to provide restitution to any victim is outweighed by the burden on the sentencing process.''

Section 5E1.1(c) is amended by inserting ''to an identifiable victim'' immediately following ''to make restitution''.

Section 5E1.1(d) is deleted in its entirety and the following new subsections are inserted in lieu thereof:

''(d) A restitution order may direct the defendant to make a single, lump sum payment, partial payments at specified intervals, in-kind payments, or a combination of payments at specified intervals and in-kind payments. 18 U.S.C. § 3664(f)(3)(A). An in-kind payment may be in the form of (1) return of property; (2) replacement of property, or (3) if the victim agrees, services rendered to the victim or to a person or organization other than the victim. 18 U.S.C. § 3664(f)(4).

(e) A restitution order may direct the defendant to make nominal periodic payments if the court finds from facts on the record that the economic circumstances of the defendant do not

allow the payment of any amount of a restitution order and do not allow for the payment of the full amount of a restitution order in the foreseeable future under any reasonable schedule of payments.

(f) Special Instruction.

(1) This guideline applies only to a defendant convicted of an offense committed on or after November 1, 1997. Notwithstanding the provisions of § 1B1.11 (Use of Guidelines Manual in Effect on Date of Sentencing), use the former § 5E1.1 (set forth in Appendix C, amendment 537) in lieu of this guideline in any other case.''.

The Commentary to § 5E1.1 captioned ''Application Note'' is amended by deleting Note 1 in its entirety; and by deleting ''Application Note:''.

The Commentary to § 5E1.1 captioned ''Background'' is amended in the first sentence of the first paragraph by inserting '', United States Code,'' immediately following ''Title 18''; by deleting the second sentence and inserting the following in lieu thereof: ''Orders of restitution are authorized under 18 U.S.C. §§ 2248, 2259, 2264, 2327, 3663, and 3663A.''; in the third sentence by deleting ''other'' immediately following ''For''; and by inserting ''for which an order of restitution is not authorized'' immediately following ''offenses''; and by deleting the fourth sentence and inserting in lieu thereof ''To the extent that any of the above-noted statutory provisions conflict with the provisions of this guideline, the applicable statutory provision shall control.''.

The Commentary to § 5E1.1 captioned ''Background'' is amended by deleting the second through fifth paragraphs in their entirety.

Section 8B1.1 is deleted in its entirety and the following is inserted in lieu thereof:

''§ 8B1.1. Restitution—Organizations.

(a) The court shall——

(1) Enter a restitution order in the case of an identifiable victim of the offense for the full amount of the victim's loss, if such order is authorized under 18 U.S.C. § 2248, § 2259, § 2264, § 2327, § 3663, or § 3663A; or

(2) Impose a term of probation with a condition requiring restitution in the case of an identifiable victim of the offense for the full amount of the victim's loss, if a restitution order would be authorized under 18 U.S.C. § 3663, except for the fact that the offense of conviction is not an offense under Title 18, United States Code, 21 U.S.C. § 841, § 848(a), § 849, § 856, § 861, or § 863, or 49 U.S.C. § 46312, § 46502, or § 46504.

(b) Provided, that the provisions of subsection (a) do not apply—

(1) when full restitution has been made; or

(2) in the case of a restitution order under § 3663; a restitution order under 18 U.S.C. § 3663A that pertains to an offense against property described in 18 U.S.C. § 3663A(c)(1)(A)(ii); or a condition of restitution imposed pursuant to subsection (a)(2) above, to the extent the court finds, from facts on the record, that (1) the number of identifiable victims is so large as to make restitution impracticable, or (2) determining complex issues of fact related to the cause or amount of the victim's losses would complicate or prolong the sentencing process to a degree that the need to provide restitution to any victim is outweighed by the burden on the sentencing process.

(c) If a defendant is ordered to make restitution to an identifiable victim and to pay a fine, the court shall order that any money paid by the defendant shall first be applied to satisfy the order of restitution.

(d) A restitution order may direct the defendant to make a single, lump sum payment, partial payments at specified intervals, in-kind payments, or a combination of payments at specified intervals and in-kind payments. 18 U.S.C. § 3664(f)(3)(A). An in-kind payment may be in the form of (1) return of property; (2) replacement of property, or (3) if the victim agrees, services rendered to the victim or to a person or organization other than the victim. 18 U.S.C. § 3664(f)(4).

(e) A restitution order may direct the defendant to make nominal periodic payments if the court finds from facts on the record that the economic circumstances of the defendant do not allow the payment of any amount of a restitution order, and do not allow for the payment of the full amount of a restitution order in the foreseeable future under any reasonable schedule of payments.

(f) Special Instruction.

(1) This guideline applies only to a defendant convicted of an offense committed on or after November 1, 1997. Notwithstanding the provisions of § 1B1.11 (Use of Guidelines Manual in Effect on Date of Sentencing), use the former § 8B1.1 (set forth in Appendix C, amendment 537) in lieu of this guideline in any other case.

Commentary

Background: Section 3553(a)(7) of Title 18 requires the court, ''in determining the particular sentence to be imposed,'' to consider ''the need to provide restitution to any victims of the offense.'' Orders of restitution are authorized under 18 U.S.C. §§ 2248, 2259, 2264, 2327, 3663, and 3663A. For offenses for which an order of restitution is not authorized, restitution may be imposed as a condition of probation.''.

(B) *Issue for Comment:* Community Restitution—Section 205 of the Antiterrorism and Effective Death Penalty Act of 1996 (''the Act'') authorizes district courts to order ''community restitution'' when sentencing a defendant convicted of an offense described in section 401, 408(a), 409, 416, 420, or 422(a) of the Controlled Substances Act (21 U.S.C. § 841, § 848(a), § 849, § 856, § 861, or § 863) in which there is no identifiable individual victim. The Act further directs the Commission to promulgate guidelines, based on the amount of public harm caused by the offense and not to exceed the amount of the fine ordered for the offense, to assist courts in determining the appropriate amount of community restitution to be ordered in individual cases.

The Commission requests comment regarding implementation of this directive so as to fully effectuate congressional intent. The Commission specifically requests comment on (1) how the Commission should determine the appropriate amount of community restitution to be ordered, (2) whether it would be appropriate to determine the amount of community restitution by reference to the fine table found at section 5E1.2 of the Guidelines Manual, (3) whether it would be appropriate to apportion a specific percentage of any fine ordered under the current guidelines to community restitution, and (4) if it is appropriate to apportion a specific percentage of any fine ordered under the current guidelines to community restitution, whether the Commission should adjust the fine table.

Section 5E1.3 Special Assessments

32. Synopsis of Proposed Amendment: This amendment implements section 210 of the Antiterrorism and Effective Death Penalty Act of 1996. That section amends 18 U.S.C. § 3013(a)(2) to provide for a special assessment, in the case of a felony, of not less than $100 for an individual and not less than $400 for an organization.

Proposed Amendment: Section 5E1.3 is deleted in its entirety and the following replacement guideline is inserted in lieu thereof:

''*§ 5E1.3. Special Assessments.*

(a) In the case of a defendant convicted of a felony offense committed on or after April 24, 1996, the special assessment shall be $100.

(b) In the case of a defendant convicted of—

(1) A misdemeanor offense or an infraction; or

(2) A felony offense committed prior to April 24, 1996,

the special assessment shall be the amount fixed by statute (18 U.S.C. § 3013).

Commentary

Application Notes:

1. This guideline applies only if the defendant is an individual. See § 8E1.1 for special assessments applicable to organizations.

In the case of a felony conviction for an offense committed by an individual on or after April 24, 1996, this guideline specifies a special assessment in the amount of $100. Any greater special assessment is a departure from this guideline.

In any other case, the special assessment is in the amount set forth by statute.

2. The following special assessments are provided by statute (18 U.S.C. § 3013):

For Offenses Committed By Individuals On Or After April 24, 1996:

(A) Not less than $100, if convicted of a felony;

(B) $25, if convicted of a Class A misdemeanor;

(C) $10, if convicted of a Class B misdemeanor or an infraction;

(D) $5, if convicted of an infraction or a Class C misdemeanor.

For Offenses Committed By Individuals On Or After November 18, 1988, But Prior To April 24, 1996:

(E) $50, if convicted of a felony;

(F) $25, if convicted of a Class A misdemeanor;

(G) $10, if convicted of a Class B misdemeanor or an infraction;

(H) $5, if convicted of an infraction or a Class C misdemeanor.

For Offenses Committed By Individuals Prior To November 18, 1988:

(I) $50, if convicted of a felony;

(J) $25, if convicted of a misdemeanor.

3. A special assessment is required by statute for each count of conviction.

Background: Section 3013 of Title 18, added by The Victims of Crimes Act of 1984, Pub. L. No. 98–473, 98 Stat. 1837, 2174 (1984), requires courts to impose special assessments on convicted defendants for the purpose of funding the Crime Victims Fund established by the same legislation.

In the case of felony conviction for an offense committed on or after April 24, 1996, the special assessment authorized by statute on each count is not less than $100 if the defendant is an individual. No maximum limit is specified. In all other cases, the amount of the special assessment is fixed by statute.

The Commission has set the guideline for a special assessment for a felony offense committed by an individual on or after April 24, 1996 at $100. The Commission believes a special assessment in this amount, combined with the restitution provisions in § 5E1.1 (Restitution) and the fine provisions in § 5E1.2 (Fines) (which increase with the seriousness of the offense committed), will provide an appropriate, coordinated financial penalty.''.

Section 8E1.1 amended by deleting the guideline in its entirety and the following replacement guideline is inserted in lieu thereof:

Section 8E1.1. Special Assessments—Organizations

(a) In the case of a defendant convicted of a felony offense committed on or after April 24, 1996, the special assessment shall be $400.

(b) In the case of a defendant convicted of—

(1) A misdemeanor offense or an infraction; or

(2) A felony offense committed prior to April 24, 1996,

the special assessment shall be the amount fixed by statute (18 U.S.C. § 3013).

Commentary

Application Notes:

1. This guideline applies if the defendant is an organization. It does not apply if the defendant is an individual. See § 5E1.3 for special assessments applicable to individuals.

In the case of a felony conviction for an offense committed by an organization on or after April 24, 1996, this guideline specifies a special assessment in the amount of $400. Any greater special assessment is a departure from this guideline.

In any other case, the special assessment is in the amount set forth by statute.

2. The following special assessments are provided by statute (18 U.S.C. § 3013):

For Offenses Committed By Organizations On Or After April 24, 1996:

(A) Not less than $400, if convicted of a felony;

(B) $125, if convicted of a Class A misdemeanor;

(C) $50, if convicted of a Class B misdemeanor; or

(D) $25, if convicted of a Class C misdemeanor or an infraction.

For Offenses Committed By Organizations On Or After November 18, 1988 But Prior To April 24, 1996:

(E) $200, if convicted of a felony;

(F) $125, if convicted of a Class A misdemeanor;

(G) $50, if convicted of a Class B misdemeanor; or

(H) $25, if convicted of a Class C misdemeanor or an infraction.

For Offenses Committed By Organizations Prior To November 18, 1988:

(I) $200, if convicted of a felony;

(J) $100, if convicted of a misdemeanor.

3. A special assessment is required by statute for each count of conviction.

Background: Section 3013 of Title 18, added by The Victims of Crimes Act of 1984, Pub. L. No. 98–473, Title II, Chap. XIV, requires courts to impose special assessments on convicted defendants for the purpose of funding the Crime Victims Fund established by the same legislation.

In the case of felony conviction for an offense committed on or after April 24, 1996, the special assessment authorized by statute on each count is not less than $400 if the defendant is an organization. No maximum limit is specified. In all other cases, the amount of the special assessment is fixed by statute.

The Commission has set the guideline for a special assessment for a felony offense committed by an organization on or after April 24, 1996 at $400. The Commission believes a special assessment in this amount, combined with the restitution provisions in Part B of this Chapter and the fine provisions in Part C of this Chapter (which increase with the seriousness of the offense committed), will provide an appropriate, coordinated financial penalty.''.

Section 5H1.13 Susceptibility to Abuse in Prison and Designation of Prison Facility

33. Synopsis of Proposed Amendment: This amendment creates an additional policy statement in Chapter 5, part H as § 5H1.13 (Susceptibility to Abuse in Prison and Designation of Prison (Policy Statement)). The amendment provides that neither susceptibility to abuse in prison nor the type of imprisonment facility designated for service of imprisonment is ordinarily relevant in determining a departure.

Proposed Amendment: Chapter 5, Part H is amended by inserting an additional policy statement as:

''§ 5H1.13. Susceptibility to Abuse in Prison and Designation of Prison Facility (Policy Statement).

Neither susceptibility to abuse in prison nor the type of facility designated for service of a term of imprisonment is ordinarily relevant in determining whether a sentence should be outside the applicable guideline range.''.

Section 5K2.0 Grounds for Departure

34. Synopsis of Proposed Amendment: This amendment proposes to make changes to policy statement § 5K2.0 (Grounds for Departure). The proposed amendment moves language discussing departure policies from the Introduction of the Guidelines Manual to § 5K2.0; deletes a sentence that, under the proposed emergency amendment to the immigration guidelines, will no longer be apt; adds a citation to Koon v. United States, 116 S.Ct. 2035 (1996), to reflect the greater deference to be accorded district court departure decisions by the appellate courts; adds a sentence stating that departures must be consistent with the purposes of sentencing and Sentencing Reform Act goals; and makes minor changes to improve the precision of the language.

Proposed Amendment: Section 5K2.0 is amended by deleting ''Under 18 U.S.C. § 3553(b) the sentencing court may impose a sentence outside the range established by the applicable guideline, if the court finds 'that there exists an aggravating or mitigating circumstance of a kind, or to a degree, not adequately taken into consideration by the Sentencing Commission in formulating the guidelines that should result in a sentence different from that described.' '' and inserting in lieu thereof ''The Sentencing Reform Act permits a court to depart from a guideline range when it finds 'an aggravating or mitigating circumstance, of a kind or to a degree, not adequately taken into consideration by the Sentencing Commission in formulating the guidelines that should result in a sentence different from that described. 18 U.S.C. § 3553(b). The Commission intends for sentencing courts to treat each guideline as carving out a 'heartland,' a set of typical cases embodying the conduct that each guideline describes. When a court finds an atypical case, one to which a particular guideline linguistically applies, but where conduct significantly differs from the norm, the court may consider whether a departure is warranted. With the few exceptions noted below, the Commission does not intend to limit the kinds of factors, whether or not mentioned anywhere else in the guidelines, that could constitute grounds for departure in an unusual case.

Factors that the court may not take into account as grounds for departure are:

(1) race, sex, national origin, creed, religion, and socio-economic status (See § 5H1.10);

(2) Lack of guidance as a youth and similar circumstances (See § 5H1.12);

(3) Drug or alcohol abuse (See § 5H1.4);

(4) Personal financial difficulties and economic pressures upon a trade or business (See § 5K2.12).''.

Section 5K2.0 is amended in the first paragraph by beginning a new paragraph at the sentence that starts ''Circumstances that may warrant departure''; by deleting ''guidelines'' immediately following ''from the'' and inserting in lieu thereof ''guideline range''; by deleting ''controlling'' immediately following ''The''; by deleting ''can only be'' immediately following ''warranted'' and inserting in lieu thereof ''most appropriately is''; by deleting ''courts'' immediately following ''the'' and inserting in lieu thereof ''sentencing court on a case-specific basis''; by inserting ''determining'' immediately following ''consideration in''; by deleting ''guidelines'' immediately following ''consideration in the'' and inserting in lieu thereof ''guideline range''; by deleting ''guideline level'' immediately following ''circumstances, the'' and inserting in lieu thereof ''weight''; and by inserting ''under the guidelines'' immediately following ''factor''.

Section 5K2.0 is amended in the third paragraph by deleting ''For example, the use of a weapon has been listed as a specific offense characteristic under many guidelines, but not under immigration violations. Therefore, if a weapon is a relevant factor to sentencing for an immigration violation, the court may depart for this reason.''

Section 5K2.0 is amended in the fourth paragraph by deleting ''An'' and inserting in lieu thereof ''Finally, an''; by inserting '', in the commission's view,'' immediately following ''circumstance that''; and by inserting parentheses around ''not ordinarily relevant'' immediately before ''in determining''.

The Commentary to § 5K2.0 is amended by inserting ''Moreover, any cited basis for departure must be consistent with the statutory purposes of sentencing and the fundamental objectives of the Sentencing Reform Act. See 18 U.S.C. §§ 3553(a),(b), 28 U.S.C. § 991 (b)(1).'' immediately before ''For, example''; and by inserting as a new paragraph ''The Supreme Court has determined that, in reviewing a district court's decision to depart from the guidelines, appellate courts are to apply an abuse of discretion standard. Koon v. United States, 116 S.Ct. 2035 (1996).''

Section 5K2.19 Successive Federal Prosecution

35. Synopsis of Proposed Amendment: This amendment proposes to create an additional amendment in Chapter 5, Part K as § 5K2.19 (Successive Federal Prosecutions (Policy Statement)). The amendment provides that a federal prosecution following another jurisdiction's prosecution for the same or similar conduct is not ordinarily relevant in determining a departure, except as authorized by § 5G1.3 (Imposition of a Sentence on a Defendant subject to an Undischarged Term of Imprisonment).

Proposed Amendment: Chapter 5, Part K is amended by inserting an additional policy statement as follows:

''§ 5K2.19. Successive Federal Prosecution (Policy Statement).

Prosecution and conviction in federal court following prosecution in another jurisdiction for the same or similar offense conduct is not ordinarily relevant in determining whether a sentence below the guideline range is warranted, except as authorized by § 5G1.3 (Imposition of a Sentence on a Defendant subject to an Undischarged Term of Imprisonment). In circumstances not covered by § 5G1.3, concerns about the impact of successive prosecutions must be carefully weighed against concerns relating to the legitimate exercise of prosecutorial authority by separate sovereigns.''.

Section 6A1.1 Presentence Report

36. Synopsis of Proposed Amendment: This amendment makes a number of technical changes to Chapter Six (Sentencing Procedures and Plea Agreements) to reflect changes recently made in the structure of Rule 32, Fed. R. Crim. P.

Proposed Amendment: Section 6A1.1 is amended by deleting ''(c)(1)'' and inserting in lieu thereof ''(b)(1)''.

The Commentary to § 6A1.1 is amended by deleting ''(c)(1)'' and inserting in lieu thereof ''(b)(1)''.

Section 6A1.2 is amended by deleting ''See Model Local Rule for Guideline Sentencing prepared by the Probation Committee of the Judicial Conference (August 1987)'' and insert in lieu thereof ''Rule 32 (b)(6), Fed. R. Crim. P.''.

The Commentary to § 6A1.2 captioned ''Application Note'' is amended in Note 1 by deleting ''111 S. Ct. 2182'' and inserting in lieu thereof ''501 U.S. 129, 135–39''.

The Commentary to § 6A1.2 captioned ''Background'' is amended by inserting

''in writing'' immediately following ''respond''; and by deleting the second, third, and fourth sentences and inserting in lieu thereof ''Rule 32 (b)(6), Fed. R. Crim. P.''.

Section 6A1.3(a) is amended in the second sentence by deleting ''reasonable'' immediately before ''dispute''.

Section § 6A1.3(b) is amended by inserting ''at a sentencing hearing'' immediately following ''factors''; by deleting ''(a)(1)'' and inserting in lieu thereof ''(c)(1)''; and by deleting ''(effective Nov. 1, 1987), notify the parties of its tentative findings and provide a reasonable opportunity for the submission of oral written objections before imposition of sentence''.

The Commentary to § 6A1.3 is amended in the seventh sentence of the first paragraph by deleting ''reasonable'' immediately before ''dispute''.

The Commentary to § 6A1.3 is amended by deleting the last paragraph in its entirety.

Consolidation of Closely Related Guidelines

37. Synopsis of Proposed Amendment: This amendment consolidates a number of Chapter Two offense guidelines. There are several advantages to consolidation of offense guidelines: (1) shortening the Guidelines Manual and simplifying its application and appearance; (2) reducing the potential for inconsistency in phraseology and definitions between closely related offense guidelines (and litigation as to the meaning of such differences); (3) reducing the potential for inadvertent, unwarranted inconsistency in offense levels among closely related offense guidelines; (4) reducing the potential for uncertainty (and resulting litigation) as to which offense guideline applies when one statute references two or more closely related offense guidelines; (5) making application of the rules relating to the grouping of multiple counts of conviction simpler by reducing the frequency of cases in which the offense levels have to be determined under more than one guideline using aggregate quantity and then compared (§ 3D1.3(b)); (6) reducing the number of cross references in the Guidelines Manual and the added calculations entailed; (7) aiding the development of case law because cases involving similar or identical concepts will be referenced under one guideline section rather than different guideline sections; and (8) reducing the number of conforming amendments required when the guidelines are amended.

On the other hand, the proposed consolidation of offense guidelines may raise one or more of the following concerns: (1) some of the proposals result, or may result, in a change in offense levels for some offenses (due mainly to the application of specific offense characteristics and cross references as a result of consolidation); (2) some of the proposals may move closer to a ''real offense'' system with respect to offense behavior covered by those proposals; and (3) some of the proposals implicate other policy issues (e.g.; through the elimination of specific offense characteristics).

(A) *Consolidation of §§ 2A1.5 and 2E1.4.*

Synopsis of Proposed Amendment: Section 2E1.4 (Use of Interstate Commerce Facilities in the Commission of Murder-For-Hire) is consolidated with § 2A1.5 (Conspiracy or Solicitation to Commit Murder) with no change in offense levels. The base offense level of 32 under § 2E1.4 is represented in the consolidation by a base offense level of 28 plus four levels for pecuniary gain under subsection (b)(2). The four-level enhancement for pecuniary gain always should apply to murder-for-hire offenses under § 2E1.4. This amendment also eliminates the cross reference in § 2A1.5(c)(2) and replaces it with a bodily injury enhancement in subsection (b)(1).

The 1993 Annual Report (FY 93) shows 31 cases sentenced under § 2A1.5 (in 13 of those it was the primary guideline) and 26 cases sentenced under § 2E1.4 (in 24 of those it was the primary guideline).

The 1994 Annual Report (FY 94) shows 28 cases sentenced under § 2A1.5 (in 18 of those it was the primary guideline) and 31 cases sentenced under § 2E1.4 (in 23 of those it was the primary guideline).

The 1995 Annual Report (FY 95) shows 25 cases sentenced under § 2A1.5 (in 16 of those it was the primary guideline) and 20 cases sentenced under § 2E1.4 (in 15 of those it was the primary guideline).

Proposed Amendment: Section 2A1.5 is amended in the title by inserting at the end ''; Use of Interstate Commerce Facilities in the Commission of Murder-For-Hire''. Section 2A1.5(b) is amended by redesignating subdivision (1) as subdivision (2) and by inserting the following new subdivision:

''(1) (A) If the victim sustained permanent or life-threatening bodily injury, increase by 4 levels; or (B) if the victim sustained serious bodily injury, increase by 2 levels''.

Section 2A1.5(c) is amended in the caption by deleting ''References'' and inserting in lieu thereof ''Reference''.

Section 2A1.5(c) is amended by deleting:

''(2) If the offense resulted in an attempted murder or assault with intent to commit murder, apply § 2A2.1 (Assault With Intent to Commit Murder; Attempted Murder).''.

The Commentary to § 2A1.5 captioned ''Statutory Provisions'' is amended by inserting after ''1751(d)'' '',1958 (formerly 18 U.S.C. § 1952A).''.

The Commentary to § 2A1.5 is amended by inserting the following at the end:

''Application Notes:

1. Definitions of 'serious bodily injury' and 'permanent or life-threatening bodily injury' are found in the Commentary to § 1B1.1 (Application Instructions).

2. If the offense involved a substantial risk of death or serious bodily injury to more than one person, an upward departure may be warranted.''.

Section 2E1.4 is deleted in its entirety.

(B) *Consolidation of §§ 2A2.3 and 2A2.4.*

Synopsis of Proposed Amendment: Section 2A2.4 (Obstructing or Impeding Officers) is consolidated with § 2A2.3 (Minor Assault). The resulting offense levels are the same as those under the current guidelines, except for the following differences. First, the cross reference to aggravated assault (shown as an option under the consolidated guideline) would now apply to offenses under § 2A2.3. Currently, the cross reference to aggravated assault applies only to § 2A2.4. Second, the enhancement for official victim in the consolidated guideline would now apply to minor assault cases under § 2A2.3. Similarly, the upward departure provision for significant disruption of governmental function (Application Note 3 of the consolidated guideline) would apply to minor assault cases.

In addition, there is a split among the circuits as to whether subsection (c) refers to the conviction offense or is based on consideration of the underlying conduct (compare *United States* v. *Jennings*, 991 F.2d 725 (11th Cir. 1993) with *United States* v. *Padilla*, 961 F.2d 322 (2d Cir.), cert. denied, 506 U.S. 846 (1992). There seems no reason for the cross reference to apply to one guideline but not the other. Two options are provided. If the bracketed language (subsection (c)) is included, the cross reference to § 2A2.2 will apply on the basis of the underlying conduct (i.e., whether the assault was an aggravated or simple assault will be a sentencing

rather than a charge offense factor). If the bracketed language is not included, § 2A2.2 will apply only if established by the offense of conviction (see § 1B1.2 (Applicable Guidelines)).

The 1993 Annual Report (FY 93) shows 26 cases sentenced under § 2A2.3 (in 25 of those it was the primary guideline) and 97 cases sentenced under § 2A2.4 (in 83 of those it was the primary guideline).

The 1994 Annual Report (FY 94) shows 27 cases sentenced under § 2A2.3 (in 22 of those it was the primary guideline) and 85 cases under § 2A2.4 (in 73 of those it was the primary guideline).

The 1995 Annual Report (FY 95) shows 24 cases sentenced under § 2A2.3 (in 19 of those it was the primary guideline) and 120 cases sentenced under § 2A2.4 (in 98 of those it was the primary guideline).

Proposed Amendment: Section 2A2.3 is amended in the title by inserting at the end ''; Obstruction or Impeding Officers''.

Section 2A2.3(b) is amended by deleting ''Characteristic'' and inserting in lieu thereof ''Characteristics''.

Section 2A2.3(b) is amended by redesignating subdivision (1) as subdivision (2) and inserting the following new subsection:

''(1) If the offense involved obstructing or impeding a governmental officer in the performance of his duty, increase by 3 levels.''.

Section 2A2.3(b) is amended in the redesignated (2) (formerly (1)) by deleting ''resulted in'' and inserting in lieu thereof ''involved''.

Section 2A2.3 is amended by adding the following additional subsection:

''[(c) Cross Reference.

(1) If the offense involved aggravated assault, apply § 2A2.2 (Aggravated Assault).]''.

The Commentary to § 2A2.3 captioned ''Statutory Provisions'' is amended by inserting ''111,'' immediately before ''112''; by inserting ''1501, 1502,'' immediately following ''351(e),''; and by inserting '', 3056(d)'' immediately following ''1751(e)''.

The Commentary to § 2A2.3 captioned ''Application Notes'' is amended by deleting Notes 1 through 3 and inserting the following as new Notes 1 through 3:

''1. For purposes of this guideline—

'Minor assault' means a misdemeanor assault, or a felonious assault not covered by § 2A2.2 (Aggravated Assault).

'Firearm' and 'dangerous weapon' have the meaning given such terms in the Commentary to § 1B1.1 (Application Instructions).

'Substantial bodily injury' means 'bodily injury which involves (A) a temporary but substantial disfigurement; or (B) a temporary but substantial loss or impairment of the function of any bodily member, organ, or mental faculty.' See 18 U.S.C. § 113(b)(1).

2. Subsection (b)(1) reflects the fact that the victim was a governmental officer performing official duties. If subsection (b)(1) applies, do not apply § 3A1.2 (Official Victim) unless the offense level is determined by use of the cross reference in subsection (c).

3. The offense level under this guideline does not assume any significant disruption of governmental functions. In situations involving such disruption, an upward departure may be warranted. See § 5K2.7 (Disruption of Governmental Function).''.

The Commentary to § 2A2.3 captioned ''Background'' is deleted in its entirety.

Section 2A2.4 is amended by deleting it in its entirety.

(C) *Consolidation of §§ 2B1.1, 2B1.3, 2B6.1, and 2H3.3.*

Synopsis of Proposed Amendment: This is a three-part amendment. First, § 2B1.3 (Property Damage or Destruction) is consolidated with § 2B1.1 (Larceny, Embezzlement, and Other Forms of Theft; Receiving, Transporting, Transferring, Transmitting, or Possessing Stolen Property) with no change in offense levels.

Second, § 2B6.1 (Altering or Removing Motor Vehicle Identification Numbers, or Trafficking in Motor Vehicles or Parts with Altered or Obliterated Identification Numbers) is consolidated with § 2B1.1. Section 2B6.1 is, in effect, a stolen property guideline limited to stolen automobiles and automobile parts with altered or obliterated identification numbers. The offense levels resulting from application of the current guidelines in most cases are identical. The only differences are that § 2B6.1 has a built-in adjustment for more than minimal planning and a loss of at least $2,000. In the small percentage of cases in which the loss is $1,000 or less, or more than minimal planning is not found, the offense level from § 2B6.1 is higher than from § 2B1.1. To ensure no reduction in offense level (with respect to the more than minimal planning adjustment) under the consolidated guideline, an application note is added providing that more than minimal planning is deemed present when the offense involved altering or removing an automobile or automobile part identification number or trafficking in an automobile or automobile part with an altered or obliterated identification number. Therefore, under the consolidated guideline, if the value of the vehicle(s) or part(s) is more than $1,000, the offense level will be the same as under the current guidelines. The only difference in offense level between the current and proposed guideline is that if the value of the vehicle(s) or part(s) is $100 or less, the offense level under the consolidated guideline will be 6 rather than 8; and if the value of the vehicle(s) or part(s) is $101–$1,000, the offense level under the consolidated guideline will be 7 rather than 8. In FY 95, 4.3% of cases (i.e.; 3 of 70 cases) sentenced under § 2B6.1 did not receive an enhancement under § 2B6.1(b)(1) because the value of the vehicle was less than $2,000.

Third, the consolidation of §§ 2B1.1 and 2B1.3 allows the consolidation of § 2H3.3 (Obstructing Correspondence) with § 2B1.1. No substantive change in offense levels would result.

The 1993 Annual Report (FY 93) shows 3,902 cases sentenced under §§ 2B1.1 and 2B1.2 (which is now consolidated with § 2B1.1; in 3,769 of those they were the primary guidelines), 79 cases sentenced under § 2B1.3 (in 74 of those it was the primary guideline), 93 cases sentenced under § 2B6.1 (in 85 of those it was the primary guideline), and 17 cases sentenced under § 2H3.3 (in all of those it was the primary guideline).

The 1994 Annual Report (FY 94) shows 3,712 cases sentenced under §§ 2B1.1/2B1.2 (in 3,598 of those they were the primary guidelines), 62 cases sentenced under § 2B1.3 (in 56 of those it was the primary guideline), 55 cases sentenced under § 2B6.1 (in 51 of those it was the primary guideline), and nine cases sentenced under § 2H3.3 (in all of those it was the primary guideline).

The 1995 Annual Report (FY 95) shows 3,265 cases sentenced under §§ 2B1.1/2B1.2 (in 3,152 of those it was the primary guideline), 81 cases sentenced under § 2B1.3 (in 77 of those it was the primary guideline), 75 cases sentenced under § 2B6.1 (in 70 of those it was the primary guideline), and seven cases sentenced under § 2H3.3 (in all of those it was the primary guideline).

Proposed Amendment: Section 2B1.1 is amended in the title by inserting at the end ''; Property Damage or Destruction; Obstructing Correspondence''.

Section § 2B1.1(b)(3) is amended by redesignating ''(B)'' as ''(C)'';

By deleting ''or'' immediately after ''was taken'' and inserting in lieu thereof ''destroyed, or obstructed, (B)'';

And by deleting ''of such item'' and inserting in lieu thereof '',destruction, or obstruction of undelivered United States mail''.

Section 2B1.1(b)(5) is amended by inserting ''or to receive stolen vehicles or vehicle parts,'' immediately following ''vehicle parts,''.

Section 2B1.1(c) is amended by deleting ''Reference'' and inserting in lieu thereof ''References''; and by inserting the following new subdivision at the end:

''(2) If the offense involved arson, or property destruction by use of explosives, apply § 2K1.4 (Arson; Property Destruction by Use of Explosives) if the resulting offense level is greater than that determined above.''.

The Commentary to § 2B1.1 captioned ''Statutory Provisions'' is amended by inserting ''511,'' immediately following ''225,''; by inserting ''(2),'' immediately following ''553(a)(1),''; by inserting ''1361,'' immediately following ''664,''; by inserting ''1703,'' immediately following ''1702,''; and by inserting ',2321'' immediately following ''2317''.

The Commentary to § 2B1.1 captioned ''Application Notes'' is amended by inserting the following additional notes:

''15. In some cases, the monetary value of the property damaged or destroyed may not adequately reflect the extent of the harm caused. For example, the destruction of a $500 telephone line may cause an interruption in service to thousands of people for several hours. In such instances, an upward departure may be warranted.

16. More than minimal planning shall be deemed present in any offense involving altering or removing an automobile (or automobile part) identification number or trafficking in an automobile (or automobile part) with an altered or obliterated identification number.''.

The Commentary to § 2B1.1 captioned ''Background'' is amended by inserting the following as a new first paragraph:

''This guideline covers offenses involving theft, stolen property, and property damage or destruction. It also covers offenses involving altering or removing motor vehicle identification numbers, trafficking in automobiles or automobile parts with altered or obliterated identification numbers, and obstructing correspondence.'';

In the third paragraph by deleting ''Consistent with statutory distinctions, an'' and inserting in lieu thereof ''An''; by inserting in the first sentence of the third paragraph '', destruction, or obstruction'' immediately following ''theft''; and by deleting in the third paragraph ''. Theft of undelivered mail interferes with a governmental function, and the scope of the theft may be difficult to ascertain'' immediately following ''undelivered mail'', and inserting in lieu thereof ''because theft, destruction, or obstruction of undelivered mail inherently interferes with a governmental function''; in the fourth paragraph by inserting ''or to receive stolen vehicles or vehicle parts'' immediately following ''vehicle parts''; Section 2B1.3 is deleted in its entirety.

Section 2B6.1 is deleted in its entirety.

Section 2H3.3 is deleted in its entirety.

Section 2K1.4(a)(4) is amended by deleting ''§ 2B1.3 (Property Damage or Destruction)'' and inserting in lieu thereof ''§ 2B1.1 (Larceny, Embezzlement, and Other Forms of Theft; Receiving, Transporting, Transferring, Transmitting, or Possessing Stolen Property; Property Damage or Destruction; Obstructing Correspondence)''.

(D) *Consolidation of §§ 2C1.2 and 2C1.6.*

Synopsis of Proposed Amendment: This amendment consolidates §§ 2C1.2 (Offering, Giving, Soliciting, or Receiving a Gratuity) and 2C1.6 (Loan or Gratuity to Bank Examiner, or Gratuity for Adjustment of Farm Indebtedness, or Procuring Bank Loan, or Discount of Commercial Paper). Both guidelines cover offenses involving gratuities and have identical base offense levels. There are, however, several inconsistencies between §§ 2C1.2 and 2C1.6. Section 2C1.2 (like § 2C1.1) contains enhancements for multiple instances and involvement of high-level officials, but § 2C1.6 does not contain these enhancements. Section 2C1.2 has a special instruction pertaining to fines for organizations; § 2C1.6 does not contain this instruction. This amendment removes these inconsistencies. In addition, this amendment adds an application note to clarify that the unlawful payment involved need not be a monetary payment.

The 1993 Annual Report (FY 93) shows 15 cases sentenced under § 2C1.2 (in 13 of those it was the primary guideline) and one case sentenced under § 2C1.6 (in that case it was also the primary guideline).

The 1994 Annual Report (FY 94) shows 39 cases sentenced under § 2C1.2 (in 37 of those it was the primary guideline) and no cases sentenced under § 2C1.6.

The 1995 Annual Report (FY 95) shows 37 cases sentenced under § 2C1.1 (in 35 of those it was the primary guideline) and no cases sentenced under § 2C1.6.

Proposed Amendment: Section § 2C1.2(b)(2)(A) is amended by deleting ''gratuity'' and inserting in lieu thereof ''unlawful payment''.

Section § 2C1.2(b)(2)(B) is amended by deleting ''gratuity'' and inserting in lieu thereof ''unlawful payment''.

The Commentary to § 2C1.2 captioned ''Statutory Provisions'' is amended by inserting ''§ '' immediately following ''§ ''; and by inserting '', 212, 214, 217, 666'' immediately following ''(c)(1)''.

The Commentary to § 2C1.2 captioned ''Application Notes'' is amended by inserting the following additional note:

''5. An unlawful payment may be anything of value; it need not be a monetary payment.''.

The Commentary to § 2C1.2 captioned ''Background'' is amended by deleting the second, third, and fourth sentences and inserting the following in lieu thereof:

''It also applies to the offer to, or acceptance by, a bank examiner of any unlawful payment; the offer or receipt of anything of value for procuring a loan or discount of commercial paper from a Federal Reserve Bank; and the acceptance of a fee or other consideration by a federal employee for adjusting or cancelling a farm debt.''.

(E) *Consolidation of §§ 2C1.3, 2C1.4, and 2C1.5.*

Synopsis of Proposed Amendment: This amendment consolidates §§ 2C1.3 (Conflict of Interest), 2C1.4 (Payment or Receipt of Unauthorized Compensation), and § 2C1.5 (Payments to Obtain Public Office) .

Although the elements of the offenses of conflict of interest (currently covered by § 2C1.3) and unauthorized compensation (currently covered by § 2C1.4) payment differ in some ways, the gravamen of the offenses is similar—unauthorized receipt of a payment in respect to an official act. The base offense levels for both guidelines are identical. The few cases in which these guidelines were applied usually involved a conflict of interest offense that was associated with a bribe or gratuity; i.e., the conflict of interest statute was used as a plea bargaining statute.

Note that there may be a change in offense levels for some cases if the cross reference to the guidelines for offenses involving a bribe or gratuity is provided. If the bracketed language (subsection (c)) is included, a cross reference to § 2C1.1 or § 2C1.2 will apply on the basis of the underlying conduct; i.e., as a sentencing factor rather than a charge of conviction factor.

Offenses involving payment to obtain public office (currently covered by § 2C1.5) generally, but not always, involve the promised use of influence to obtain public appointive office. Also, such offenses need not involve a public official (see, for example, the second paragraph of 18 U.S.C. § 211). The current offense level for all such offenses is level 8. The two statutes to which § 2C1.5 applies (18 U.S.C. §§ 210

and 211) are both Class A misdemeanors.

Under the proposed consolidation, the base offense level would be level 6, but the higher base offense level of § 2C1.5 would be taken into account by a 2-level enhancement in subsection (b)(2) covering conduct under 18 U.S.C. § 210 and the first paragraph of 18 U.S.C. § 211. There is one circumstance in which a lower offense level may result and one circumstance in which a higher offense level may result. The offense level for conduct under the second paragraph of 18 U.S.C. § 211 (the prong of § 211 that does not pertain to the promise or use of influence) is reduced to level 6. On the other hand, conduct that involves a bribe of a government official will result in an increased offense level (level 10 or greater) under the proposed cross reference.

The 1993 Annual Report (FY 93) shows four cases sentenced under § 2C1.3 (in all of those it was the primary guideline), seven cases sentenced under § 2C1.4 (in all of those it was the primary guideline), and no cases sentenced under § 2C1.5.

The 1994 Annual Report (FY 94) shows 16 cases sentenced under § 2C1.3 (in 13 of those it was the primary guideline), 16 cases sentenced under § 2C1.4 (in 15 of those it was the primary guideline), and one case sentenced under § 2C1.5 (in that case it was also the primary guideline).

The 1995 Annual Report (FY 95) shows 10 cases sentenced under § 2C1.3 (in all of those it was the primary guideline), six cases sentenced under § 2C1.4 (in all of those it was the primary guideline), and no cases sentenced under § 2C1.5.

Proposed Amendment: Section 2C1.3 is amended in the title by inserting at the end ''; Payment or Receipt of Unauthorized Compensation; Payments to Obtain Public Office''.

Section 2C1.3(b) is amended by inserting the following additional subsection:

(2) If the offense involved (A) the payment, offer, or promise of any money or thing of value in consideration of the use of, or promise to use, any influence to procure an appointive federal position for any person; or (B) the solicitation or receipt of any money or thing or value in consideration of the promise of support, or use of influence, in obtaining an appointive federal position for any person, increase by 2 levels.

Section 2C1.3 is amended by inserting at the end the following:

[(c) Cross Reference.

(1) If the offense involved a bribe or gratuity, apply § 2C1.1 (Offering, Giving, Soliciting, or Receiving a Bribe; Extortion Under Color of Official Right) or § 2C1.2 (Offering, Giving, Soliciting, or Receiving a Gratuity), as appropriate, if the resulting offense level is greater than determined above.]

The Commentary to § 2C1.3 captioned ''Statutory Provisions'' is amended by inserting '', 209, 210, 211, 1909'' immediately following ''208''.

The Commentary to § 2C1.3 captioned ''Application Notes'' is amended by deleting ''Note'' and inserting in lieu thereof ''Notes''.

The Commentary to § 2C1.3 captioned ''Background'' is deleted in its entirety.

Section 2C1.4 is deleted in its entirety.

Section 2C1.5 is deleted in its entirety.

(F) *Consolidation of §§ 2D1.9 and 2D1.10.*

Synopsis of Proposed Amendment: Section 2D1.10 is consolidated with § 2D1.9. The offenses covered by both guidelines essentially involve endangering human life while manufacturing a controlled substance. The treatment under the current guidelines, however, is very different. Under § 2D1.9 (effective 11/1/87), the offense level is 23, with no additional characteristics. Under § 2D1.10 (effective 11/1/89), the offense level is the greater of 20 or 3 plus the offense level from the underlying drug offense. In the consolidated guideline, the structure from § 2D1.10 (the more recently adopted guideline) is used. Two bracketed options (level 20 or level 23) are provided for the alternative base offense level in subsection (a)(2). If level 20 is provided as the alternative base offense level under subsection (a)(2), a change in offense levels for some cases under § 2D1.9 may result. The base offense level currently is 23 for offenses under § 2D1.9. The base offense level applicable for such offenses under the consolidation with § 2D1.10 would be either 3 plus the offense level from the Drug Quantity Table in § 2D1.1; or 20.

The 1993 Annual Report (FY 93) shows no cases sentenced under § 2D1.9 or § 2D1.10.

The 1994 Annual report (FY 94) shows no cases sentenced under § 2D1.9 and four cases sentenced under § 2D1.10 (in all of those it was the primary guideline).

The 1995 Annual Report (FY 95) shows no cases sentenced under § 2D1.9 and four cases sentenced under § 2D1.10 (in all of those it was the primary guideline).

Proposed Amendment: Section 2D1.10 is amended in the title by inserting at the end ''; Placing or Maintaining Dangerous Devices on Federal Property to Protect the Unlawful Production of Controlled Substances; Attempt or Conspiracy''.

Section 2D1.10(a)(2) is amended by deleting ''20'' and inserting in lieu thereof ''[20][23]''.

The Commentary to § 2D1.10 is amended by deleting ''Provision'' and inserting in lieu thereof ''Provisions'' and by inserting ''§ 841 (e),'' immediately following ''§ ''.

Section 2D1.9 is deleted in its entirety.

Section 2D1.10 is redesignated as § 2D1.9.

(G) *Consolidation of §§ 2D2.1 and 2D2.2.*

Synopsis of Proposed Amendment: Sections 2D2.2 (Acquiring a Controlled Substance by Forgery, Fraud, Deception, or Subterfuge; Attempt or Conspiracy) and 2D2.1 (Unlawful Possession; Attempt or Conspiracy) are consolidated. The only substantive change is that any adjustment for acquiring a controlled substance by forgery, fraud, deception, or subterfuge will be determined as a sentencing factor rather than on the basis of the offense of conviction.

The 1993 Annual Report shows 961 cases sentenced under § 2D2.1 (in 904 of those it was the primary guideline) and 38 cases sentenced under § 2D2.2 (in 34 of those it was the primary guideline).

The 1994 Annual Report (FY 94) shows 845 cases sentenced under § 2D2.1 (in 809 of those it was the primary guideline) and 46 cases sentenced under § 2D2.2 (in 41 of those it was the primary guideline).

The 1995 Annual Report (FY 95) shows 630 cases sentenced under § 2D2.1 (in 587 of those it was the primary guideline), 24 cases sentenced under § 2D2.2 (in 17 of those it was the primary guideline).

Proposed Amendment: Section 2D2.1 is amended in the title by inserting ''of a Controlled Substance; Acquiring a Controlled Substance by Misrepresentation, Forgery, Fraud, Deception or Subterfuge'' immediately following ''Possession''.

Section 2D2.1(b) is redesignated as ''(c)''.

Section 2D2.1(c)(2) (formerly (b)(2)) is amended by inserting ''if the resulting offense level is greater than that determined above'' immediately before ''.''.

Section 2D2.1 is amended by adding the following new subsection after subsection (a):

''(b) Specific Offense Characteristic

(1) If the offense involved acquiring a controlled substance from a legally

authorized source by misrepresentation, forgery, fraud, deception, or subterfuge, increase by 2 levels. If the resulting offense level is less than level 8, increase to level 8.''.

The Commentary to § 2D2.1 is amended by deleting ''Provision'' and inserting in lieu thereof ''Provisions'' and by inserting ''§ 843(a)(3),'' immediately after ''§ ''.

The Commentary to § 2D2.1 is amended by inserting the following:

''Application Note:

1. Subsection (b)(1) would apply, for example, where the defendant obtained a controlled substance from a pharmacist by using a forged prescription or a prescription obtained from a physician by fraud or deception.''.

The Commentary to § 2D2.1 captioned ''Background'' is amended in the second paragraph by deleting ''2D2.1(b)'' and inserting in lieu thereof ''2D2.1(c)''.

Section 2D2.2 is deleted in its entirety.

(H) *Consolidation of §§ 2D3.1 and 2D3.2*.

Synopsis of Proposed Amendment: Sections 2D3.1 (Regulatory Offenses Involving Registration Numbers; Unlawful Advertising Relating to Schedule I Substances; Attempt or Conspiracy) and 2D3.2 (Regulatory Offenses Involving Controlled Substances; Attempt or Conspiracy) are consolidated. Section 2D3.1 currently has a base offense level of 6; § 2D3.2 has a base offense level of 4. The consolidated guideline would have a base offense level of 6, the base offense level most typical for regulatory offenses.

The 1993 Annual Report shows seven cases sentenced under § 2D3.1 (in all of those it was the primary guideline) and three cases sentenced under § 2D3.2 (then §§ 2D3.2–2D3.5; in all of those they were the primary guidelines).

The 1994 Annual Report (FY 94) shows nine cases sentenced under § 2D3.1 (in eight of those it was the primary guideline) and two cases sentenced under §§ 2D3.2–2D3.5 (in both of those they were the primary guidelines).

The 1995 Annual Report (FY 95) shows two cases sentenced under § 2D3.1 (in both of those it was the primary guideline) and four cases sentenced under §§ 2D3.2–2D3.5 (in three of those they were the primary guidelines).

Proposed Amendment: Section 2D3.1 is amended in the title by deleting ''Registration Numbers'' and inserting in lieu thereof ''Controlled Substances or Listed Chemicals''.

The commentary to § 2D3.1 captioned ''Statutory Provisions'' is amended by deleting ''842(a)(1), 843(a)(1), (2)'' and inserting in lieu thereof ''842(a)(1), (2), (9), (10), (b), 843(a)(1), (2), 954, 961''.

Section 2D3.2 is deleted in its entirety.

(I) *Consolidation of §§ 2E2.1 and 2B3.2*.

Synopsis of Proposed Amendment: Sections 2B3.2 (Extortion by Force or Threat of Injury or Serious Damage) and 2E2.1 (Making or Financing an Extortionate Extension of Credit; Collecting an Extension of Credit by Extortionate Means) are consolidated. These guidelines use the same basic structure and cover conduct that is in many respects similar. The current guidelines have four differences. First, the base offense level of § 2B3.2 is 18 with a 2-level adjustment for an express or implied threat of death, bodily injury, or kidnapping. The base offense level of § 2E2.1 is 20. Second, the offense levels for weapon use (originally identical) are now different. (In 1991, the Commission increased the adjustments for firearms possession or use in §§ 2B3.1 and 2B3.2 but not § 2E2.1).

Third, § 2B3.2 provides an enhancement for the amount demanded or loss to the victim. Section 2E2.1 does not contain this enhancement (because there would be substantial difficulty in separating the unlawfully demanded interest from the principal and legitimate interest that could have been charged). Fourth, § 2B3.2 contains a cross reference to the attempted murder guideline; § 2E2.1 does not.

The consolidated guideline uses the base offense level and adjustments from § 2B3.2. A specific offense characteristic is added to include a 2-level adjustment for extortionate extension of credit and collecting an extension of credit by extortionate means (resulting in the same offense level as the current guideline for such conduct). In addition, Application Note 1 is amended to provide (as in current § 2E2.1) that, in cases involving extortionate extension of credit or collecting an extension of credit by extortionate means, subsection (b)(2) does not apply to the demand for repayment of principal or interest in the case of a loan.

Under the consolidation, offenses under § 2E2.1 will be subject to a weapon enhancement that may be two levels greater, in some cases, than is currently provided by the weapon enhancement in § 2E2.1. In addition, under the consolidated guideline, the attempted murder cross reference in § 2B3.2 and the enhancement in § 2B3.2(b)(3)(B) (providing a three-level increase if the offense involved preparation or other demonstrated ability to carry out a threat of specified unlawful behavior), would now apply to offenses under § 2E2.1.

The 1993 Annual Report (FY 93) shows 52 cases sentenced under § 2B3.2 (in 36 of those it was the primary guideline) and 48 cases sentenced under § 2E2.1 (in 31 of those it was the primary guideline).

The 1994 Annual Report (FY 94) shows 129 cases sentenced under § 2B3.2 (in 74 of those it was the primary guideline), and 48 cases sentenced under § 2E2.1 (in 29 of those it was the primary guideline).

The 1995 Annual Report (FY 95) shows 93 cases sentenced under § 2B3.2 (in 52 of those it was the primary guideline), and 62 cases sentenced under § 2E2.1 (in 39 of those it was the primary guideline).

Proposed Amendment: Section 2B3.2 is amended in the title by inserting at the end ''; Extortionate Extension of Credit; Collecting an Extension of Credit by Extortionate Means''.

Section 2B3.2(b)(2) is amended by inserting at the end the following: ''Do not apply this subsection in the case of extortionate extension of credit or collecting an extension of credit by extortionate means.''.

Section 2B3.2(b) is amended by inserting the following additional subdivision at the end:

''(6) If the offense involved extortionate extension of credit or collecting an extension of credit by extortionate means, increase by 2 levels.''.

Section 2B3.2(c) is amended by inserting the following additional subdivision:

''(3) If the offense did not involve a threat, express or implied, that reasonably could be interpreted as one to injure a person or physically damage property, or any comparably serious threat, apply § 2B3.3 (Blackmail and Similar Forms of Extortion).''.

The Commentary to § 2B3.2 captioned ''Statutory Provisions'' is amended by inserting ''892–894'' following ''877,''.

The Commentary to § 2B3.2 captioned ''Statutory Provisions'' is amended by inserting ''892–894,'' immediately following ''877''.

The Commentary to 2B3.2 captioned ''Application Notes'' is amended in Note 1 by inserting at the beginning ''For purposes of this guideline-'';

By deleting ''are defined in the commentary to § 1B1.1 (Application Instructions)'' and inserting in lieu thereof ''have the meaning given such terms in [the commentary to] § 1B1.1'';

And by inserting the following additional paragraph at the end:

'' 'Loss to the victim,' as used in subsection (b)(2), means any demand

paid plus any additional consequential loss from the offense (e.g., the cost of defensive measures taken in direct response to the offense). Subsection (b)(2) does not apply in the case of extortionate extension of credit or collecting an extension of credit by extortionate means. However, in such a case, if the loss to the victim involved consequential loss from the offense, such as damage to an automobile, an upward departure may be warranted.''.

The Commentary to § 2B3.2 captioned ''Application Notes'' is amended in Note 3 by deleting the last sentence.

The Commentary to § 2B3.2 captioned ''Application Notes'' is amended by deleting Note 5 in its entirety and renumbering the remaining notes accordingly.

The Commentary to § 2B3.2 captioned ''Background'' is deleted in its entirety.

Section 2E2.1 is deleted in its entirety.

(J) *Consolidation of §§ 2E5.3 and 2F1.1*

Synopsis of Proposed Amendment: Section 2E5.3 (False Statements and Concealment of Facts in Relation to Documents Required by the Employee Retirement Income Security Act; Failure to Maintain and Falsification of Records Required by the Labor Management Reporting and Disclosure Act) and 2F1.1 (Fraud and Deceit; Forgery; Offenses Involving Altered or Counterfeit Instruments Other than Counterfeit Bearer Obligations of the United States) are consolidated. Section 2E5.3 is an infrequently used guideline for what is essentially a false statement offense or a failure to maintain records offense that in some cases may be used to conceal another offense, generally embezzlement or bribery. Consolidation with § 2F1.1 retains the same base offense level, and will produce the same final offense level in cases of embezzlement.

Currently, Application Note 13 of § 2F1.1 describes situations in which application of offense guidelines other than § 2F1.1 may be more apt. This amendment adds a cross reference to § 2F1.1 to apply another offense guideline if the offense conduct is addressed more specifically by that guideline and modifies Application Note 13 accordingly. Application Note 13 is also modified to address the small number of cases in which this offense may be committed to conceal a bribery offense.

The 1993 Annual Report (FY 93) shows two cases sentenced under § 2E5.3 (in both of those it was the primary guideline) and 5,963 cases sentenced under § 2F1.1 (in 5,696 of those it was the primary guideline).

The 1994 Annual Report (FY 94) shows 10 cases sentenced under § 2E5.3 (in seven of those it was the primary guideline), and 6,235 cases sentenced under § 2F1.1 (in 5,952 of those it was the primary guideline).

The 1995 Annual Report (FY 95) shows 90 cases sentenced under § 2E5.3 (in eight of those it was the primary guideline) and 6,339 cases sentenced under § 2F1.1 (in 6,019 of those it was the primary guideline).

Proposed Amendment: Section 2E5.3 is deleted in its entirety.

Section 2F1.1 is amended by inserting the following new subsection:

''(c) Cross Reference.

(1) If the offense conduct is addressed more specifically by another offense guideline, apply that offense guideline.''.

The Commentary to § 2F1.1 captioned ''Statutory Provisions'' is amended by deleting '', 1026, 1028,'' and inserting ''-''; and by inserting ''; 29 U.S.C. §§ 439, 461, 1131'' immediately after ''2315''.

The Commentary to § 2F1.1 captioned ''Application Notes'' is amended in Note 13 by deleting ''Sometimes,'' and inserting in lieu thereof ''Subsection (c)(1) provides a cross reference to another offense guideline if that guideline more specifically addresses the offense conduct than this section does. For example, sometimes''; by inserting ''false statements to secure immigration documents, for which § 2L2.1 or § 2L2.2 would be more apt,'' immediately before ''and false statements''; by inserting ''§ 2S1.3 or'' immediately before ''§ 2T3.1''; and by deleting ''Where the indictment or information setting forth the count of conviction (or a stipulation as described in § 1B1.2(a)) establishes an offense more aptly covered by another guideline, apply that guideline rather than § 2F1.1. Otherwise, in such cases, § 2F1.1 is to be applied, but a departure from the guidelines may be considered.'' and inserting in lieu thereof: ''In certain other cases, an offense involving fraudulent statements or documents, or failure to maintain required records, may be committed in furtherance of the commission or concealment of another offense, such as embezzlement or bribery. In such cases, § 2B1.1 or § 2E5.1 would be more apt.''.

The Commentary to § 2F1.1 captioned ''Background'' is amended by inserting the following new paragraph after the first paragraph:

''This guideline also covers the falsification of documents or records relating to a benefit plan covered by the Employment Retirement Income Security Act and failure to maintain or falsification of documents required by the Labor Management Reporting and Disclosure Act.''.

(K) Consolidation of §§ 2E1.2 and 2E1.3.

Synopsis of Proposed Amendment: Sections 2E1.2 (Interstate or Foreign Travel or Transportation in Aid of a Racketeering Enterprise) and 2E1.3 (Violent Crimes in Aid of Racketeering Activity) are consolidated. Both have the base offense level for the underlying offense as the primary base offense level. Section 2E1.2 has an alternative base offense level of 6 and § 2E1.3 has an alternative base offense level of 12. Elimination of these alternative base offense levels will considerably simplify the operation of these guidelines, removing the need in each case for the comparison set forth in Application Note 1. In FY 95, 5 of the 24 cases sentenced under § 2E1.2 (or 20.8%) had a base offense level of 6, and one of the 19 cases sentenced under § 2E1.3 (or 5.3%) had a base offense level of 12.

The 1993 Annual Report (FY 93) shows 90 cases sentenced under § 2E1.2 (in 72 of those it was the primary guideline) and 55 cases sentenced under § 2E1.3 (in 26 of those it was the primary guideline).

The 1994 Annual Report (FY94) shows 97 cases sentenced under § 2E1.2 (in 77 of those it was the primary guideline), and 48 cases sentenced under § 2E1.3 (in 17 of those it was the primary guideline).

The 1995 Annual Report (FY 95) shows 33 cases sentenced under § 2E1.2 (in 24 of those it was the primary guideline), and six cases sentenced under § 2E1.3 (in three of those it was the primary guideline).

Proposed Amendment: Section § 2E1.2 is amended in the title by inserting at the end ''; Violent Crimes in Aid of Racketeering Activity''.

Section § 2E1.2(a) is amended by deleting ''(Apply the greater):''; by deleting subsection (1) in its entirety; by deleting ''(2)''; by deleting ''the'' and inserting in its place ''The''; and by deleting ''crime of violence or other unlawful activity in respect to which the travel or transportation was undertaken'' and inserting in lieu thereof ''offense (crime of violence or racketeering activity)''.

The Commentary to § 2E1.2 captioned ''Statutory Provision'' is amended by deleting ''Provision'' and inserting in lieu thereof ''Provisions''; by inserting an additional ''§ '' immediately following the ''§ ''; and by inserting at the end ''; 1959 (formerly 18 U.S.C. 1952B)''.

The Commentary to § 2E1.2 captioned ''Application Notes'' is amended in Note 1 by deleting ''for the purposes of

subsection (a)(2)'' and by deleting the second and third sentences.

The Commentary to § 2E1.2 captioned ''Application Notes'' is amended by deleting Note 3 in its entirety.

Section 2E1.3 is deleted in its entirety.

(L) *Consolidation of §§ 2J1.2 and 2J1.3.*

Synopsis of Proposed Amendment: Sections 2J1.3 (Perjury or Subornation of Perjury; Bribery of Witness) and 2J1.2 (Obstruction of Justice) are consolidated. No substantive change in offense levels results from this consolidation. The only difference between the current guidelines is that § 2J1.3 contains a special instruction pertaining to the grouping of certain separate instances of perjury. This special instruction would continue to apply only to cases currently covered. This amendment also clarifies the interaction of §§ 2J1.2(c)(1) and 2J1.3(c)(1) with § 2X3.1 and adds an Application Note to § 2J1.2 to clarify that the criminal offense the investigation or prosecution of which was obstructed need not have been specifically charged or resulted in a conviction in order for the cross reference to § 2X3.1 to apply.

In addition, this amendment adds an application note to reemphasize that the defendant's conduct need not constitute the offense of accessory after the fact in order for the cross reference to § 2X3.1 to apply. Even though the background and commentary to § 2J1.2 was amended in 1991 to clarify that the cross reference to § 2X3.1 could apply even if the defendant was a principal to the underlying offense, hotline calls indicate there is still some confusion in respect to this issue for both §§ 2J1.2 and 2J1.3 cases.

The 1993 Annual Report (FY 93) shows 111 cases sentenced under § 2J1.2 (in 89 of those it was the primary guideline) and 125 cases sentenced under § 2J1.3 (in 109 of those it was the primary guideline).

The 1994 Annual Report (FY 94) shows 137 cases sentenced under § 2J1.2 (in 99 of those it was the primary guideline) and 119 cases sentenced under § 2J1.3 (in 96 of those it was the primary guideline).

The 1995 Annual Report (FY 95) shows 104 cases sentenced under § 2J1.2 (in 82 of those it was the primary guideline) and 78 cases sentenced under § 2J1.3 (in 63 of those it was the primary guideline).

Proposed Amendment: Section 2J1.2 is amended in the title by inserting ''Perjury or Subornation of Perjury; Witness Bribery;'' immediately before ''Obstruction''.

Section 2J1.2(b)(1) is amended by inserting ''suborn perjury or otherwise'' immediately before ''obstruct''.

Section 2J1.2 is amended by adding the following new subsection:

''(d) Special Instruction.

(1) In the case of counts of perjury or subornation of perjury arising from testimony given, or to be given, in separate proceedings, do not group the counts together under § 3D1.2 (Groups of Closely Related Counts).''.

The Commentary to § 2J1.2 captioned ''Statutory Provisions'' is amended by inserting ''201(b) (3), (4),'' immediately before ''1503,''; and by inserting '', 1621–1623'' immediately following ''1516''.

The Commentary to § 2J1.2 captioned ''Application Notes is amended in Note 2 by deleting ''or'' immediately after ''investigation'' and inserting a comma in lieu thereof; by deleting ''of the'' immediately after ''trial'' and inserting in lieu thereof '', or sentencing of the perjury, subornation of perjury, witness bribery, or''; in Note 5 by inserting ''suborn perjury or'' immediately following ''(e.g., to''; and by inserting the following additional notes:

''6. For purposes of subsection (c)(1), the criminal offense the investigation or prosecution of which was obstructed need not have been charged or resulted in a conviction.

Application of subsection (c)(1) does not require that the defendant's conduct constitute the offense of accessory after the fact. Rather, it provides for the use, in the circumstances specified, of the guideline that applies to accessory after the fact offenses. Thus, the fact that a defendant cannot be an accessory after the fact, under federal law, to an offense in which the defendant is a principal does not bar application of this cross reference.

7. 'Separate proceedings,' as used in subsection (d)(1), includes different proceedings in the same case or matter (e.g., a grand jury proceeding and a trial, or a trial and retrial), and proceedings in separate cases or matters (e.g., separate trials of codefendants), but does not include multiple grand jury proceedings in the same case.''.

The Commentary to § 2J1.2 captioned ''Background'' is amended in the first sentence by deleting ''the'' immediately following ''involving'' and inserting in lieu thereof ''perjury, subornation of perjury, witness bribery, and''.

Section 2J1.3 is deleted in its entirety.

Issue for Comment: The special instruction currently contained in § 2J1.3(d)(1) applies to perjury or subornation of perjury and not to obstruction, separate instances of which are more difficult to determine. This special instruction was not included in the original guideline but was later added to cover the very infrequent perjury case to which it applied (approximately six in 40,000 cases). The Commission requests comment on whether this historical policy judgment, which was limited to perjuries, should be expanded to cover obstructions.

(M) *Consolidation of §§ 2K1.1 and 2K1.6.*

Synopsis of Proposed Amendment: Sections 2K1.1 and 2K1.6 are consolidated. These are regulatory and recordkeeping offenses having the same base offense level. The only substantive change resulting from the consolidation is that the cross reference in § 2K1.6, which directs to apply § 2K1.3 if the offense reflected an effort to conceal a substantive offense, would also apply to offenses under § 2K1.1. This could result in a change in offense levels for cases under § 2K1.1 (offenses under which currently have a statutory maximum of one year.) There seems no reason that the cross reference in § 2K1.6 (covering conduct reflecting an effort to conceal a substantive offense) should not also cover conduct under § 2K1.1.

The 1993 Annual Report (FY 93) shows no cases sentenced under § 2K1.1 or § 2K1.6.

The 1994 Annual Report (FY 94) shows nine cases sentenced under § 2K1.1 (in all of those it was the primary guideline) and no cases sentenced under § 2K1.6.

The 1995 Annual Report (FY 95) shows 11 cases sentenced under § 2K1.1 (in all those it was the primary guideline) and no cases sentenced under § 2K1.6.

Proposed Amendment: Section 2K1.1 is amended in the title by inserting at the end ''; Licensee Recordkeeping Violations''.

Section 2K1.1 is amended by adding the following new subsection after subsection (a):

''(b) Cross Reference:

(1) If the offense involved an effort to conceal a substantive explosive materials offense, apply § 2K1.3 (Unlawful Receipt, Possession, or Transportation of Explosives Materials; Prohibited Transactions Involving Explosive Materials).''.

The Commentary to § 2K1.1 captioned ''Statutory Provisions'' is amended by inserting ''(f), (g),'' immediately following ''§ 842''.

The Commentary to § 2K1.1 captioned ''Background'' is deleted in its entirety.

Section 2K1.6 is deleted in its entirety.

(N) *Consolidation of §§ 2L2.2 and 2L2.5.*

Synopsis of Proposed Amendment: Sections 2L2.2 and 2L2.5 are consolidated. No change in offense level

will result. Section 2L2.5 covers a rarely prosecuted statute that has the same base offense level as § 2L2.2. Section 2L2.2 contains additional adjustments, but they do not apply to conduct covered by § 2L2.5.

The 1993 Annual Report (FY 93) shows 186 cases sentenced under § 2L2.2 (in 156 of those it was the primary guideline) and no cases sentenced under § 2L2.5.

The 1994 Annual Report (FY 94) shows 266 cases sentenced under § 2L2.2 (in 242 of those it was the primary guideline) and no cases sentenced under § 2L2.5.

The 1995 Annual Report (FY 95) shows 402 cases sentenced under § 2L2.2 (in 354 of those it was the primary guideline) and no cases sentenced under § 2L2.5.

Proposed Amendment: Section 2L2.2 is amended in the title by inserting at the end ''; Failure to Surrender Canceled Naturalization Certificate''.

The Commentary to § 2L2.2 captioned ''Statutory Provisions'' is amended by deleting ''1426'' and inserting in lieu thereof ''1427''.

Section 2L2.5 is deleted in its entirety.

(O) *Consolidation of §§ 2M2.1 and 2M2.3.*

Synopsis of Proposed Amendment: This amendment consolidates §§ 2M2.1 (Destruction of, or Production of Defective, War Material, Premises, or Utilities) and 2M2.3 (Destruction of, or Production of Defective, National Defense Material, Premises, or Utilities). [Note: The Commission decided in October that it did not wish to propose deletion of these two guidelines and their incorporation into § 2B1.1 (Theft, Embezzlement, Receipt of Stolen Property, and Property Destruction), but the Commission indicated a willingness to consider merging the two guidelines into one.] Consolidation is appropriate for two reasons. First, prosecutions under these statutes are infrequent. In FY 1990 through 1995, there were no cases sentenced under these guidelines. Second, although the statutes referenced to §§ 2M2.1 and 2M2.3 cover an extremely wide range of conduct (e.g., from major sabotage designed to injure the United States on one hand to minor property damage by a disgruntled serviceman or a war protest group on the other), the offenses covered by these two guidelines essentially are property damage offenses. An option for addressing the issue of the appropriate offense level is to add an application note explaining the circumstances under which a departure may be warranted.

Proposed Amendment: Section 2M2.1 is amended by deleting subsection (a) in its entirety and inserting the following in lieu thereof:

(a) Base Offense Level (Apply the greater):

(1) 32, if the defendant is convicted (A) under 18 U.S.C. § 2153 or § 2154; or (B) under 42 U.S.C. § 2284 of acting with intent to injure the United States or aid a foreign nation; or

(2) 26, otherwise.

The Commentary to § 2M2.1 captioned ''Statutory Provisions'' is amended by inserting an additional ''§ '' immediately following the ''§ ''; and by deleting ''2154'' and inserting in lieu thereof ''–2156''.

The Commentary to § 2M1.1 captioned ''Application Note'' is amended by deleting Note 1 in its entirety and inserting the following in lieu thereof:

[1. Because this section covers a particularly wide range of conduct, it is not possible to include all of the potentially relevant circumstances in the offense level. Therefore, depending on the circumstances of the case, an upward or a downward departure may be warranted. For example, if the defendant was convicted under 18 U.S.C. § 2155 of throwing paint on defense equipment or supplies as an act of protest during peacetime, the offense level in subsection (a)(2) may overrepresent the seriousness of the offense. In that case, a downward departure may be warranted. However, if the defendant was convicted under 18 U.S.C. § 2153 of major sabotage of arms and munitions while the United States was at war, the offense level in subsection (a)(1) may underrepresent the seriousness of the offense. In that case, an upward departure may be warranted. Factors to be considered in determining the extent of the departure include whether the offense was committed while the United States was at war, whether the purpose of the offense was to injure the United States or aid a foreign nation or power, whether a substantial risk of death or physical injury was created, and the extent to which national security was threatened. See Chapter Five, Part K (Departures).]

Section 2M2.3 is deleted in its entirety.

(P) *Deletion of § 2M3.4.*

Synopsis of Proposed Amendment: This amendment deletes § 2M3.4 (Losing National Defense Information) as unnecessary and potentially counterproductive. This guideline covers an extremely rarely prosecuted offense. There have been no sentences recorded under this section since the guidelines took effect. Given that this offense could occur in a variety of circumstances (as well as could be used as a plea bargain offense for a more serious offense), it seems questionable whether the current § 2M3.4 is adequate to provide an appropriate result. Given the rarity of this offense, deletion of this offense guideline is recommended. Any offenses currently handled under this section will be addressed by § 2X5.1 (Other Offenses).

The 1993 Annual Report (FY 93) shows no cases sentenced under § 2M3.4.

The 1994 Annual Report (FY 94) shows no cases sentenced under § 2M3.4.

The 1995 Annual Report (FY 95) shows no cases sentenced under § 2M3.4.

Proposed Amendment: Section 2M3.4 is deleted in its entirety.

(Q) *Consolidation of §§ 2M3.5 and 2M6.2.*

Synopsis of Proposed Amendment: Sections 2M3.5 (Tampering with Restricted Data Concerning Atomic Energy) and 2M6.2 (Violation of Other Federal Atomic Energy Agency Statutes, Rules, and Regulations) are rarely used guidelines that cover conduct relating to atomic energy. Currently, there seems to be some inconsistency in the offense levels between these guidelines. It is not clear why tampering with restricted data concerning atomic energy has an offense level of 24 (even if done with intent to injure the United States or aid a foreign nation) while violations of other federal atomic energy statutes, rules, or regulations have an offense level of 30 if committed with intent to injure the United States or aid a foreign nation. This amendment would remove this inconsistency by consolidating these guidelines. However, offenses that involve tampering with restricted data (which currently receive an offense level of 24) would receive an offense level of 30 if the offense were committed with intent to injure the United States or aid a foreign nation.

The 1993 Annual Report (FY 93) shows no cases sentenced under § 2M3.5, and five cases sentenced under § 2M6.2 (in four of those it was the primary guideline).

The 1994 Annual Report (FY 94) shows no cases sentenced under § 2M3.5, and two sentences under § 2M6.2 (in one of those it was the primary guideline).

The 1995 Annual Report (FY 95) shows no cases sentenced under § 2M3.5 and three cases sentenced under § 2M6.2 (in all of those it was the primary guideline).

Proposed Amendment: Section 2M6.2 is amended in the title by inserting ''Tampering With Restricted Data Concerning Atomic Energy;'' immediately before ''Violation''.

Section 2M6.2(a) is amended by deleting ''Greater'' and inserting in lieu thereof ''Greatest''; by renumbering subdivision (2) as subdivision (3) and inserting the following as subdivision (2):

''(2) 24, if the offense involved tampering with restricted data concerning atomic energy; or''.

The Commentary to § 2M6.2 captioned ''Statutory Provision'' is amended by deleting ''Provision'' and inserting in lieu thereof ''Provisions''; by inserting ''§ '' immediately before ''2273''; and by inserting '', 2276'' immediately following ''2273''.

The Commentary to § 2M6.2 is amended by inserting the following immediately before ''Background'':

''Application Note:

1. For purposes of this guideline, 'tampering with restricted data concerning atomic energy'' means conduct proscribed by 18 U.S.C. § 2276.''.

Section 2M3.5 is deleted in its entirety.

(R) *Consolidation of §§ 2N3.1 and 2F1.1.*

Synopsis of Proposed Amendment: Section 2N3.1 (Odometer Laws and Regulations) is consolidated with § 2F1.1 (Fraud and Deceit; Forgery; Offenses Involving Altered or Counterfeit Instruments Other Than Counterfeit Bearer Obligations of the United States). Currently, § 2N3.1 has the same base offense level as § 2F1.1 and is cross-referenced to § 2F1.1 if more than one vehicle was involved (one vehicle cases are infrequent). Under this consolidation, fraud by odometer tampering involving one vehicle will be treated the same as other fraud (i.e., the specific offense characteristics for loss and more than minimal planning will apply, if warranted). There seems no reason to treat this type of fraud differently than other types of fraud.

The 1993 Annual Report (FY 93) shows 5,963 cases sentenced under § 2F1.1 (in 5,696 of those it was the primary guideline) and 17 cases sentenced under § 2N3.1 (in all of those it was the primary guideline).

The 1994 Annual Report (FY 94) shows 6,235 cases sentenced under § 2F1.1 (in 5,952 of those it was the primary guideline) and eight cases sentenced under § 2N3.1 (in seven of those it was the primary guideline).

The 1995 Annual Report (FY 95) shows 6,339 cases sentenced under § 2F1.1 (in 6,019 of those it was the primary guideline) and two cases sentenced under § 2N3.1 (in both of those it was the primary guideline).

Proposed Amendment: The Commentary to § 2F1.1 captioned ''Statutory Provisions'' is amended by inserting '', 1983–1988, 1990c'' immediately following ''1644''.

The Commentary to § 2F1.1 captioned ''Background'' is amended by inserting as a new paragraph after the first paragraph:

''This guideline also covers offenses relating to odometer laws and regulations.''.

Section 2N3.1 is deleted in its entirety.

(S) *Consolidation of §§ 2T1.1 and 2T1.6.*

Synopsis of Proposed Amendment: Sections 2T1.1 (Tax Evasion; Willful Failure to File Return, Supply Information, or Pay Tax; Fraudulent or False Returns, Statements, or Other Documents) and 2T1.6 (Failing to Collect or Truthfully Account for and Pay Over Tax) are consolidated. Section 2T1.6 is an infrequently prosecuted tax offense involving an employer failing to collect or truthfully account for any pay over tax.

Both guidelines have the same base offense level. In most cases, there will be no change in offense level, which is based on the tax loss, because sections 2T1.1(b) (1) and (2) will not apply to conduct under § 2T1.6. However, currently § 2T1.6 contains a cross reference to § 2B1.1 (Larceny, Embezzlement, and Other Forms of Theft) if the offense involved embezzlement by withholding tax from an employee's earnings and willfully failing to account to the employee for it. Application of that cross reference could result in offense levels one or two levels greater for offenses under § 2T1.6. That cross reference no longer exists under the consolidation, and the consolidation does not provide an enhancement for offenses involving embezzlement.

The 1993 Annual Report (FY 93) shows 302 cases sentenced under § 2T1.1 (in 225 of those it was the primary guideline) and five cases sentenced under § 2T1.6 (in all of those it was the primary guideline).

The 1994 Annual Report (FY 94) shows 528 cases sentenced under § 2T1.1 (in 413 of those it was the primary guideline) and no cases sentenced under § 2T1.6.

The 1995 Annual Report (FY 95) shows 517 cases sentenced under § 2T1.1 (in 405 of those it was the primary guideline) and five cases sentenced under § 2T1.6 (in all of those it was the primary guideline).

Proposed Amendment: Section 2T1.1 is amended in the title by inserting ''; Failing to Collect or Truthfully Account for and Pay Over Tax'' immediately following ''Documents''.

Section 2T1.1(c) is amended by renumbering subdivision (5) as subdivision (6) and by inserting the following as a new subdivision (5):

''(5) If the offense involved failing to collect or truthfully account for any pay over tax, the tax loss is the amount of tax not collected or accounted for and paid over.''.

Section 2T1.6 is deleted in its entirety.

(T) *Consolidation of §§ 2E4.1, 2T2.1, and 2T2.2.*

Synopsis of Proposed Amendment: Sections 2E4.1 (Unlawful Conduct Relating to Contraband Cigarettes), 2T2.1 (Non-Payment of [Alcohol and Tobacco] Taxes), and 2T2.2 (Regulatory Offenses) and are consolidated. This amendment consolidates three infrequently applied guidelines.

Under this consolidation, the base offense level for § 2T2.2 is raised from four to six, which is the base offense most typical for regulatory offenses. Otherwise, there is no substantive change.

The 1993 Annual Report shows no cases sentenced under § 2E4.1, seven cases sentenced under § 2T2.1 (in five of those it was the primary guideline), and no cases sentenced under § 2T2.2.

The 1994 Annual Report (FY94) shows 10 cases sentenced under § 2E4.1 (in six of those it was the primary guideline), four cases sentenced under § 2T2.1 (in one of those it was the primary guideline), and no cases sentenced under § 2T2.2.

Proposed Amendment: Chapter Two, Part T, Subpart 2 captioned ''Introductory Commentary'' is deleted in its entirety.

Section 2T2.1 is amended by deleting it in its entirety and inserting in lieu thereof:

§ 2T2.1. Non-Payment of Taxes; Regulatory Offenses.

(a) Base Offense Level (Apply the Greatest):

(1) Level from § 2T4.1 (Tax Table) corresponding to the tax loss;

(2) 9, if the offense involved contraband cigarettes; or

(3) 6, if there is no tax loss.

(b) Special Instruction.

(1) For purposes of this guideline, the ''tax loss'' is the total amount of taxes on the alcohol or tobacco that the taxpayer failed to pay, evaded, or attempted to evade.

Commentary

Statutory Provisions: 18 U.S.C. §§ 2342(a), 2344(a); 26 U.S.C. §§ 5601, 5603–5605, 5661, 5671, 5762. For additional statutory provision(s), see Appendix A (Statutory Index).

Application Notes:

1. In the case of contraband cigarettes (as defined in 18 U.S.C. § 2341 (2)), the tax loss is the total amount of unpaid state excise taxes on the cigarettes.

2. Offense conduct directed at more than tax evasion (e.g., theft or fraud) may warrant an upward departure.

Background: This section covers a variety of offenses involving alcohol and tobacco, including evasion of alcohol and tobacco taxes, evasion of state excise taxes on cigarettes, operating an illegal still, and regulatory offenses.''

Sections 2E4.1 and 2T2.2 are deleted in their entirety.

[FR Doc. 96–33157 Filed 12–31–96; 8:45 am]

BILLING CODE 2210–40–P

federal register

Thursday
January 2, 1997

Part III

Environmental Protection Agency

40 CFR Part 89

Control of Emissions of Air Pollution from Nonroad Diesel Engines; Proposed Rule

ENVIRONMENTAL PROTECTION AGENCY

40 CFR Part 89

[AMS–FRL–5670–3]

RIN 2060–AF76

Control of Emissions of Air Pollution From Nonroad Diesel Engines

AGENCY: Environmental Protection Agency.

ACTION: Supplemental advance notice of proposed rulemaking.

SUMMARY: EPA, the California Air Resources Board, and members of the nonroad diesel engine industry recently signed a Statement of Principles (''Nonroad SOP'') calling for significantly more stringent standards for emissions of oxides of nitrogen, hydrocarbons, and particulate matter from compression-ignition, or diesel, engines used in most land-based nonroad equipment and some marine applications. In addition, members of the nonroad equipment manufacturing industry that utilize these engines have also signed in support of the SOP. If these standards are implemented, the resulting emission reductions would translate into significant, long-term improvements in air quality in many areas of the U.S. For engines in this large category of pollution sources, NOx and PM emissions would be reduced by up to two-thirds from current standards. Overall, the proposed program would provide much-needed assistance to states and regions facing ozone and particulate air quality problems that are causing a range of adverse health effects for their citizens, especially in terms of respiratory impairment and related illnesses.

EPA is issuing this Supplemental Advance Notice of Proposed Rulemaking (Supplemental ANPRM) to make available the text of the Nonroad SOP and to invite comment from all interested parties on EPA's plans to propose new emission standards and other related provisions for these engines consistent with the Nonroad SOP. This action supplements an earlier Advance Notice published on August 31, 1995, which provides additional context for EPA's plans regarding nonroad engines.

DATES: EPA requests comment on this Supplemental ANPRM no later than February 3, 1997. Should a commenter miss the requested deadline, EPA will try to consider any comments that it receives prior to publication of the Notice of Proposed Rulemaking (NPRM) that the Agency expects to follow this Supplemental ANPRM. There will also be an opportunity for oral and written comment when EPA publishes the NPRM.

ADDRESSES: Materials relevant to this action are contained in Public Docket A–96–40, located at room M–1500, Waterside Mall (ground floor), U.S. Environmental Protection Agency, 401 M Street, S.W., Washington, DC 20460. The docket may be inspected from 8:00 a.m. until 5:30 p.m., Monday through Friday. A reasonable fee may be charged by EPA for copying docket materials.

Comments on this notice should be sent to Public Docket A–96–40 at the above address. EPA requests that a copy of comments also be sent to Tad Wysor, U.S. EPA , 2565 Plymouth Road, Ann Arbor, MI 48105.

FOR FURTHER INFORMATION CONTACT: Tad Wysor, U.S. EPA, Engine Programs and Compliance Division, 2565 Plymouth Road, Ann Arbor, MI 48105. Telephone: (313) 668–4332.

SUPPLEMENTARY INFORMATION:

I. Background and Purpose for This Supplemental Advance Notice

With this notice EPA announces the signing of a Statement of Principles (SOP) between EPA, the California Air Resources Board, and members of the nonroad diesel engine manufacturing industry. Members of the nonroad equipment manufacturing industry that utilize these engines also signed in support of the SOP. EPA announced its intent to pursue an SOP for nonroad engines in an Advance Notice of Proposed Rulemaking (ANPRM) on August 31, 1995 (60 FR 45580). This 1995 ANPRM discussed the need for further reductions of NO_X, PM, and HC from highway heavy-duty engines (HDEs) and nonroad engines and presented for public comment an SOP focusing on highway HDEs. Today's Supplemental Advance Notice includes the text of the Nonroad SOP as an appendix to this preamble.

It is the Agency's intent to issue a Notice of Proposed Rulemaking (NPRM) in the near future in accordance with the Nonroad SOP. Such a proposal will be subject to the full public process of any proposed rulemaking. By publishing the text of the SOP in advance of the NPRM, EPA hopes to receive early comments and suggestions which can inform the development of the proposal. In addition, in the August 1995 ANPRM EPA discussed a number of reasons why the Agency places a high priority on considering new emission standards for both highway heavy-duty engines and nonroad engines. EPA encourages comment on this rationale as it applies to nonroad engines and on all aspects of the Nonroad SOP published here.

As discussed in the August 31, 1995 ANPRM, EPA believes that the Nonroad SOP represents a constructive framework for stringent new standards for a class of engines which contribute heavily to the nation's air quality problems. Emissions of oxides of nitrogen (NO_X) are a major part of the ozone problem facing many areas (due to local emissions as well as the transport of ozone and its precursors from upwind areas); these emissions add to the NO_X-related problems of acid rain, eutrophication of estuaries, and the formation of secondary nitrate PM; and NO_X emissions are directly harmful to human health and the environment. NO_X emissions from compression-ignition (CI) nonroad engines (commonly called nonroad diesels) represent a large fraction of total nationwide NO_X emissions, about 10 percent, or about 20 percent of nationwide mobile-source NO_X emissions.[1] EPA expects that emission reductions from current standards will be largely offset in the future by growth in this sector. Figure 1 illustrates EPA's current projection of the emissions of NO_X from nonroad diesels covered by this Supplemental ANPRM as compared to total mobile source emissions.[2]

BILLING CODE 6560–50–P

[1] The discussion of the contribution of nonroad engines in the 1995 ANPRM was general and included some categories of nonroad engines not covered in the recent Nonroad SOP. Today's action is limited to the Nonroad SOP categories.

[2] The ''Nonroad Diesel'' emissions presented in Figure 1 are the sum of all diesel-powered source categories listed in the memo ''Nonroad Diesel and Mobile Source NO_X Emission Projections'' (found in Docket Number A–96–40) except highway vehicles, commercial marine vessels, and locomotives. The ''All Mobile Sources'' emissions in Figure 1 are the total of all source categories listed in the memo except stationary sources.

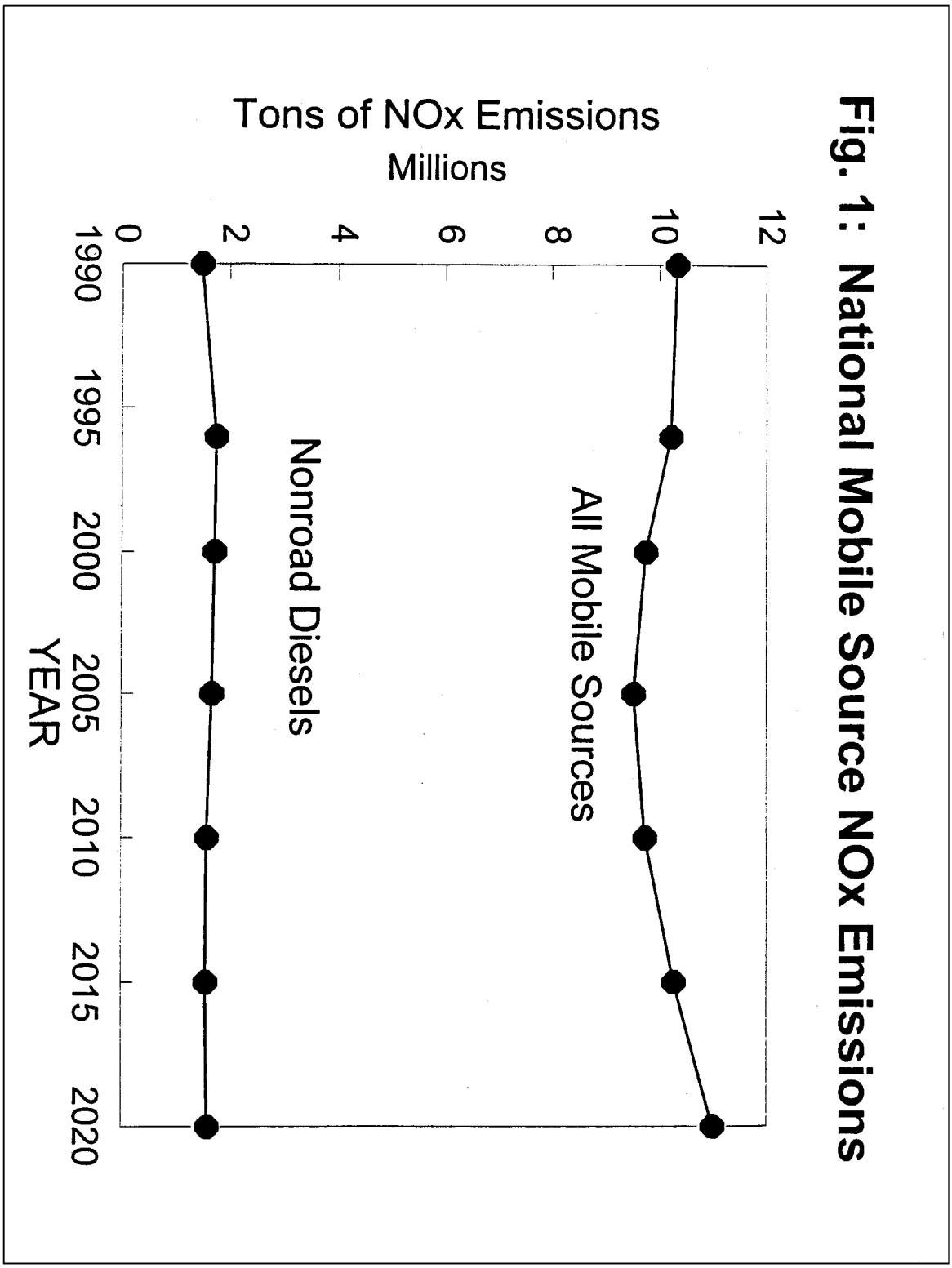

BILLING CODE 6560–50–C

Available evidence shows that PM caused by diesel engines contributes to a variety of respiratory problems and diseases. Nonroad diesels covered by the Nonroad SOP contribute a large fraction of the diesel PM emissions to which Americans are exposed—nearly half of the total PM from diesel engines. Finally, nonroad diesel engines are also significant contributors to hydrocarbon emissions, a key precursor to ozone formation.[3]

A first set of emission standards, called ''Tier 1'' standards, was previously issued for new land-based nonroad diesel engines rated at or above 37 kW (50 hp) (59 FR 31306, June 17, 1994). As a result, manufacturers of these engines are now beginning to address the emissions of their products. For nonroad diesel engines rated below 37 kW, no emission standards currently exist. All diesel nonroad engine and equipment manufacturers are at a much earlier stage in the development and incorporation of emission control technologies than are their counterparts in the highway engine and truck/bus industries. Also, in contrast to the relatively small number of large, domestically-focused companies that dominate the heavy-duty highway engine and truck/bus industries, the nonroad diesel industry is made up of a large number of engine and equipment manufacturers, many of which do business internationally.

II. Summary of the Nonroad SOP and EPA Plans

The Nonroad SOP concerns most diesel nonroad engines and the equipment they power. Nonroad engine categories not addressed in this SOP and being addressed in other federal programs are those used in aircraft, underground mining equipment, locomotives, marine vessels over 37 kW, and all spark-ignition (SI) nonroad engines, including gasoline engines. As discussed in the Nonroad SOP, EPA will pursue a separate SOP with manufacturers of land-based SI engines rated at over 19 kW (25 hp) regarding standards for this class of engines. Other SI engines are being addressed in separate EPA initiatives.

The approach to new emission standards is somewhat different in the Nonroad SOP than in the Heavy-duty Highway SOP, where a single set of standards was proposed. Specifically, the Nonroad SOP involves a tiered approach to reducing the standards. For engines rated at 37 kW and above, which are subject to the Tier 1 regulations, the SOP discusses a Tier 2 set of standards for the early years of the next decade and Tier 3 standards 3 to 5 years later for engines rated between 37 kW and 560 kW (750 hp). The Tier 2 nonroad NO_X standards for engines rated at 37 kW and above are similar in stringency to the heavy-duty highway engine NO_X standards that will apply in 1998; the Tier 3 nonroad NO_X standards are similar in stringency to the highway heavy-duty NO_X standards proposed for 2004 (see 61 FR 33421, June 27, 1996).

As discussed in the SOP, EPA plans to propose a second tier of PM standards for nonroad engines rated at 37 kW and above, but does not plan to immediately propose a third tier of standards for PM. Recent health studies have raised new concerns about exposure to diesel and other PM, and EPA has proposed a revision of the existing PM NAAQS and is currently taking comment. At this time, the Agency believes it is premature to address diesel nonroad PM standards beyond the second tier contained in the SOP, and would take any further reductions that might be proposed in the future into account in the below-discussed review of the feasibility of the proposed Tier 3 NMHC+NO_X standards.

For nonroad diesel engines rated under 37 kW, EPA plans to propose federal standards for the first time.[4] The SOP contains a set of Tier 1 standards for the 1999–2000 time frame and Tier 2 standards in the 2004–5 time frame.

For the Tier 3 over 37 kW engine standards and the Tier 2 under 37 kW engine standards, the Nonroad SOP calls for EPA to conduct a review, including opportunity for public comment, of any rule adopting these standards to assess whether these standards are technologically feasible and otherwise appropriate under the Clean Air Act. This review is to be completed by the end of 2001. The SOP describes a number of issues to be covered in this review, including the cost of engine and equipment redesigns.

There are some program areas for which the SOP does not contain detailed provisions, as discussed below. EPA particularly solicits comment on these areas in its preparation of the proposal.

The SOP participants are interested in establishing a program that, in real-world operating experience, achieves the emission control levels implied in the SOP standards. To this end, the Agency is evaluating whether the provisions adopted in the Tier 1 program that impact emission controls' durability, such as the length of the regulatory useful life, should be revised. Comment is solicited on the need for and form of such changes.

In addition, the SOP discusses a program to encourage clean alternative fuels and innovative diesel emission control technologies through optional standards and test procedures. EPA solicits suggestions on the appropriate standards and procedures for this program, as well as on any other concepts which might help accomplish this goal.

Because many manufacturers of nonroad diesel engines and equipment market their products on an international scale, the industry places a very high value on globally harmonized emission standards. Therefore, the Nonroad SOP states that harmonized standards and test procedures will be pursued to the maximum extent possible, provided that these measures do not compromise either the SOP's other provisions or the air quality needs of the U.S. The Agency requests comment on specific program elements by which fuller harmonization might be achieved.

Finally, the SOP includes detailed provisions for a proposal giving flexibility to equipment manufacturers in incorporating the cleaner engines envisioned in the SOP into their products. The SOP also expresses the signatories' intent to develop alternative flexibility proposals that will not compromise the environmental benefits. EPA encourages commenters to provide suggestions for such alternatives.

III. Potential Impacts of the SOP Standards

Because of the large reduction in the levels of emissions standards contained in the SOP and the large number of engines that would be subject to the standards, EPA and the other signatories of the Nonroad SOP expect major reductions in emissions to occur if the standards are implemented. As a part of the planned rulemaking, EPA will include detailed analyses of the emissions reductions and air quality benefits that would result from implementing the SOP standards in the planned NPRM. Based on preliminary assessments, EPA expects that the emission control program described in the SOP will reduce NO_X emissions on the order of 800,000 tons per year. Large reductions in PM would result as well, both from reducing the carbonaceous PM that is directly emitted by nonroad diesel engines and from reducing

[3] The reader will find more discussion of the health and environmental impacts of NO_X, PM, and HC, the contribution of nonroad engines to these emissions, and EPA's conclusion that new emission controls are appropriate in the August 31, 1995 ANPRM referenced above.

[4] The State of California currently regulates nonroad diesel engines under 19 kW (25 hp).

secondary nitrate PM as a result of the NO_X reductions described above. Overall, the emission reductions the Agency believes will result from the standards contained in the SOP would rank this program among the most significant single mobile-source emission control programs EPA has ever implemented.

EPA also will include in the NPRM an analysis of the expected costs of meeting the emission standards of the Nonroad SOP. A very approximate indication of possible cost impacts can be gained from the cost analyses developed by the Agency in the past for similar levels of emissions control on highway HDEs. EPA estimated the per-engine cost of reducing the highway HDE NO_X standard from 6.0 to 5.0 g/bhp-hr (effective in 1991) at less than $100 (50 FR 10653, March 15, 1985); from 5.0 to 4.0 g/bhp-hr (1998) at less than $100 (58 FR 15801, March 24, 1993); and from 4.0 g/bhp-hr NO_X to 2.5 g/bhp-hr NO_X+NMHC (proposed for 2004) at less than $500 (61 FR 33421, June 27, 1996). Thus EPA's estimate of the overall cost for reducing emissions from 6.0 g/hp-hr NO_X to 2.5 g/bhp-hr NO_X+NMHC is in the range of several hundred dollars per highway HDE. This emission reduction is similar to the reduction from 6.9 g/bhp-hr NO_X (the nonroad Tier 1 level) to 3.0 g/hp-hr NO_X+HC (the Nonroad SOP Tier 3 level for larger engines). The Agency recognizes that comparisons of this sort do not account for such differences as the potential costs of nonroad equipment redesign, relative penetration of electronic fuel controls and turbocharging, relative market sizes and degree of product diversity, special factors in small engine design, and costs of controlling other pollutants. These factors will, of course, be included in the NPRM analysis.

IV. Public Participation

The Agency is committed to a full and open regulatory process and looks forward to input from a wide range of interested parties as the rulemaking process develops. If EPA proceeds as expected with a proposed rule, these opportunities will include a formal public comment period and a public hearing. EPA encourages all interested parties to become involved in this process as it develops.

With today's action, EPA opens a comment period for this Supplemental ANPRM. Comments will be accepted through February 3, 1997. The Agency strongly encourages comment on all aspects of the SOP and the overall emission control program it lays out. The most useful comments are those supported by appropriate and detailed rationales, data, and analyses. All comments, with the exception of proprietary information, should be directed to the EPA Air Docket Section, Docket No. A–96–40 before the date specified above.

Commenters who wish to submit proprietary information for consideration should clearly separate such information from other comments by (1) labeling proprietary information ''Confidential Business Information'' and (2) sending proprietary information directly to the contact person listed (see **FOR FURTHER INFORMATION CONTACT**) and not to the public docket. This will help ensure that proprietary information is not inadvertently placed in the docket. If a commenter wants EPA to use a submission of confidential information as part of the basis for an NPRM, then a nonconfidential version of the document that summarizes the key data or information should be sent to the docket.

Information covered by a claim of confidentiality will be disclosed by EPA only to the extent allowed and in accordance with the procedures set forth in 40 CFR part 2. If no claim of confidentiality accompanies the submission when it is received by EPA, it will be made available to the public without further notice to the commenter.

V. Copies of Documents

This Supplemental Advance Notice and the Nonroad SOP, as well as the August 31, 1995 ANPRM, are available in the public docket as described under **ADDRESSES** above. These documents are also available electronically on the Internet and on the Technology Transfer Network (TTN).

A. Internet

This Supplemental Advance Notice and related documents may be found on the Internet as follows:

World Wide Web

http://www.epa.gov/omswww

FTP

ftp://ftp.epa.gov Then CD to the /pub/gopher/OMS/ directory

Gopher

gopher://gopher.epa.gov:70/11/Offices/Air/OMS

Alternatively, go to the main EPA gopher, and follow the menus:
gopher.epa.gov

EPA Offices and Regions

Office of Air and Radiation

Office of Mobile Sources

B. Technology Transfer Network (TTN)

The Technology Transfer Network (TTN) is an electronic bulletin board system (BBS) operated by EPA's Office of Air Quality Planning and Standards. Users are able to access and download TTN files free of charge (except for the cost of the phone call) on their first call using a personal computer and modem as follows:

TTN BBS: 919–541–5742 (1200–14400 bps, no parity, 8 data bits, 1 stop bit)

Voice Helpline: 919–541–5384

Also accessible via Internet: TELNET ttnbbs.rtpnc.epa.gov Off-line: Mondays from 8:00 AM to 12:00 Noon ET

VI. Statutory Authority

Section 213 of the amended Clean Air Act, 42 USC 7547(a), EPA conducted a study of emissions from nonroad engines, vehicles and equipment in 1991. Based on the results of that study, EPA determined that emissions of NO_X, volatile organic compounds (including HC), and CO from nonroad engines and equipment contribute significantly to ozone and CO concentrations in more than one NAAQS nonattainment area (see 59 FR 31306, June 17, 1994). Having made these determinations, Section 213(a)(3) of the Act requires EPA to promulgate (and from time to time revise) emissions standards for those classes or categories of new nonroad engines, vehicles, and equipment that in EPA's judgment cause or contribute to such air pollution.

Where EPA determines that other emissions from new nonroad engines, vehicles, or equipment significantly contribute to air pollution which may reasonably be anticipated to endanger public health or welfare, Section 214(a)(4) authorizes EPA to establish (and from time to time revise) emission standards from those classes or categories of new nonroad engines, vehicles, and equipment that EPA determines cause or contributor to such air pollution.

VII. Unfunded Mandates Reform Act

Under Section 202 of the Unfunded Mandates Reform Act of 1995 (UMRA), Public Law 104–4, EPA must prepare a budgetary impact statement to accompany any general notice of proposed rulemaking or final rule that includes a Federal mandate which may result in estimated costs to State, local, or tribal governments in the aggregate, or to the private sector, of $100 million or more. Under Section 205, for any rule subject to Section 202 EPA generally must select the least costly, most cost-effective, or least burdensome

alternative that achieves the objectives of the rule and is consistent with statutory requirements. Under Section 203, before establishing any regulatory requirements that may significantly or uniquely affect small governments, EPA must take steps to inform and advise small governments of the requirements and enable them to provide input.

EPA has determined that the requirements of UMRA do not extend to advance notices of proposed rulemaking such as this Supplemental Advance Notice.

VIII. Small Business Regulatory Enforcement Fairness Act (SBREFA)

The Small Business Regulatory Enforcement Fairness Act of 1996 (SBREFA), Public Law 104–121, amended the Regulatory Flexibility Act and is intended to assure that concerns about small entities are adequately considered during the development of new regulations which affect them. SBREFA does not formally apply to advance notices like this Supplemental ANPRM. However, EPA has begun to consider how small entities would be affected by the potential new standards of the SOP.

In contrast to the relatively small number of fairly large companies that dominate the heavy-duty highway engine and truck/bus industries and the primarily domestic market these industries serve, the nonroad diesel industry is made up of a large number of engine manufacturers and a still larger number of equipment manufacturers, many of which do business internationally. Some of these equipment manufacturers are relatively small businesses that may be impacted differently than larger equipment manufacturers as new technologies are incorporated into nonroad diesel engines.

Equipment manufacturers were involved in the Nonroad SOP discussions and, as discussed above, the final SOP includes several provisions which will provide flexibility to nonroad equipment manufacturers, especially smaller manufacturers, without harming the overall emission benefits of the program. EPA plans to minimize any disproportionate impact on smaller nonroad equipment manufacturers and will work with representatives of such entities as the formal proposal is developed, including the preparation of a Regulatory Flexibility Analysis. EPA requests comment on the impacts of the program outlined in the SOP on small entities; such comments will help the Agency meet its obligations under SBREFA.

IX. Administrative Designation and Regulatory Analysis

Under Executive Order 12866 (58 FR 51735 (Oct. 4, 1993)), the Agency must determine whether this regulatory action is ''significant'' and therefore subject to Office of Management and Budget (OMB) review and the requirements of the Executive Order. The order defines ''significant regulatory action'' as any regulatory action (including an advanced notice of proposed rulemaking) that is likely to result in a rule that may:

(1) have an annual effect on the economy of $100 million or more or adversely affect in a material way the economy, a sector of the economy, productivity, competition, jobs, the environment, public health or safety, or State, local, or tribal governments or communities;

(2) create a serious inconsistency or otherwise interfere with an action taken or planned by another agency;

(3) materially alter the budgetary impact of entitlements, grants, user fees, or loan programs or the rights and obligations of recipients thereof; or,

(4) raise novel legal or policy issues arising out of legal mandates, the President's priorities, or the principles set forth in the Executive Order.

This Supplemental Advance Notice was submitted to OMB for review as required by Executive Order 12866. Any written comments from OMB and any EPA response to OMB comments are in the public docket for this Notice.

List of Subjects in 40 CFR Part 89

Environmental protection, Administrative practice and procedure, Air pollution control, Diesel fuel, Motor vehicles, Motor vehicle pollution, Reporting and recordkeeping requirements, Research.

Dated: December 20, 1996.

Carol M. Browner,

Administrator.

Appendix—Nonroad Compression-Ignition Engine Statement of Principles

Nonroad Compression-Ignition Engine Statement of Principles

Members of the nonroad compression-ignition (CI) engine and equipment industry, the U.S. Environmental Protection Agency (EPA) and the California Air Resources Board (ARB) (collectively, the Signatories) recognize the importance of preserving the environment while maintaining a strong industry. This Statement of Principles (SOP) increases certainty and stability for the nonroad CI engine and equipment industry which is vital for their business planning. It also ensures cleaner air in a manner which is both realistic for industry and responds to environmental needs. With this SOP the nonroad CI engine and equipment industry has stepped forward to become a leader in environmental protection, and industry and government will work as partners to bring about cleaner air.

EPA and ARB have recently established programs to control emissions from nonroad engines. EPA and ARB recognize these engines are sources of ozone-forming oxides of nitrogen (NO_X) and hydrocarbons (HC), as well as of particulate matter (PM) and other pollutants, all of which raise concerns for public health and the environment. The current Tier 1 regulations for large CI nonroad engines are primarily focused on achieving significant NO_X reductions as early as possible and are being phased in by horsepower level beginning in 1996. At the time of finalizing the Tier 1 regulations, EPA and ARB recognized that more stringent standards for these engines, and further evaluation of the test procedure by which compliance with the standards is measured, would likely be needed in the future to help meet air quality goals. These agencies also recognized the need to control emissions from spark-ignited (SI) and other CI nonroad engines as well.

Although recent progress in improving the nation's air quality has been encouraging, EPA and ARB believe there is strong evidence that currently adopted measures are insufficient to offset such factors as the growth in vehicle and equipment sales and usage. The states and others have strongly urged EPA to undertake new programs to achieve further cost-effective emission reductions in a time frame consistent with the Clean Air Act attainment goals. In response, among other initiatives, EPA and ARB have initiated a program to further reduce emissions from heavy-duty on-highway vehicles and nonroad engines.

The industries that produce these engines have also stepped forward, expressing a desire to develop and use cost-effective emission control technologies to help meet the nation's air quality goals. EPA and ARB have consulted with these industries to help craft proposals that provide the needed air quality benefit. The effectiveness of this approach is evidenced by the issuance of a joint Statement of Principles (SOP) on July 11, 1995, outlining a proposal for stringent new nationwide standards for on-highway heavy duty engines. EPA followed up that SOP with an Advanced Notice of Proposed Rulemaking (ANPRM) and a Notice of Proposed Rulemaking (NPRM). The 1995 SOP expressed an intent by the Signatories to pursue a similar SOP for heavy-duty nonroad engines.

After considerable discussion between EPA, ARB, and the nonroad engine and equipment industries, this SOP has been completed. The Signatories expect major reductions in emissions from the standards set forth in this SOP. For nonroad CI engines rated at 50 hp (37 kW) and higher, the Tier 2 and Tier 3 standards together will achieve about a 75 percent reduction in NO_X from uncontrolled levels. The Tier 2 standards for PM represent about a 40 percent reduction from current levels. For nonroad CI engines rated at less than 50 hp, the Tier 2 standards are expected to result in NO_X and PM

reductions similar to those from the Tier 2 standards for engines rated at 50 hp and higher.

The Signatories agree that EPA should issue an ANPRM in 1996 and an NPRM in 1997 consistent with the points outlined in this document. A final rule would follow by February 1998. However, this SOP does not change the importance of EPA demonstrating the need for the standards described below and EPA's obligation to meet the criteria of the Clean Air Act in finalizing any rule, including complying with all applicable rulemaking procedures.

1. Scope

This SOP concerns CI nonroad engines as defined in 40 CFR 89.2, and the nonroad equipment powered by these engines, with the exception of engines used in aircraft, underground mining equipment, locomotives, and marine vessels. However, propulsion and auxiliary marine CI engines rated at less than 50 hp (37 kW) are included.[1] EPA is addressing marine CI engines rated at 50 hp and higher separately from this SOP.

Although EPA and ARB have made significant progress in SOP discussions with the manufacturers of nonroad SI engines rated at above 25 hp (19 kW) (as well as the manufacturers of equipment using these engines), these discussions have not yet reached a stage that would allow inclusion of these engines in this SOP. EPA and ARB will pursue the development of an SOP for nonroad SI engines above 25 hp by the end of 1996. Such an SOP would assist the nonroad engine and equipment manufacturers in their product planning. The Signatories recognize the possible competitive effects of regulating CI and SI engines separately, and EPA and ARB will take those effects into account in the development of an SI engine SOP.

2. National Standards for CI Nonroad Engines

This SOP seeks to establish a nationwide program that, in real-world operating experience, achieves the emission control levels indicated below. Recognizing that real-world control is closely linked to the test procedure by which conformance with standards is measured, the following discussion of standards should be read in the context of the test procedure discussion that follows it. The Signatories' goal is a combination of emission standards and test procedures that achieves real-world emission reductions corresponding to these standards, provided that such standards are technologically feasible and cost effective, taking into consideration both engine and equipment manufacturer costs.

a. NMHC, NO_X, CO and PM Standards

EPA will propose combined standards for nonmethane hydrocarbons (NMHC) and NO_X, and separate standards for carbon monoxide (CO) and PM. These standards would apply to any affected engine that is newly manufactured on or after January 1 of the year indicated in the following table, except as provided in Section 5, Implementation Flexibility, below. While this SOP does not specify PM standards in Tier 3, the Signatories acknowledge that there is, in general, an inverse relationship in controlling certain pollutants (e.g., NO_X and PM). The Signatories recognize that the manufacturer signatories have agreed to the Tier 3 NMHC+NO_X standards set forth below on the condition that there would be no further reduction in PM or CO from Tier 2 levels. If such reductions should be proposed, EPA will take the reductions into account in its review of the feasibility of the proposed Tier 3 NMHC+NO_X standards (see Section 4, Feasibility Review, below). The Signatories recognize the role that direct injection engine technology plays in the less than 50 hp nonroad engine market and expect the standards set forth in this SOP to allow for the continued existence of that technology. As part of the feasibility review (see Section 4 below), EPA will assess the progress in meeting Tier 2 standards for those engines using direct injection technology.

b. Smoke

The Signatories support the completion and worldwide adoption of the new smoke test being developed by the International Standards Organization (ISO 8178–9). EPA intends to propose to replace its current smoke test with the ISO test procedure for the sake of harmonization and improved control of smoke, provided that it provides for a level of smoke control at least as adequate as the current test. EPA will also propose to extend the smoke standards that were adopted in the Tier 1 rule to the under 50 hp engine category, and will evaluate the appropriateness of any changes to the smoke standards for all engine size categories in formulating the proposal.

c. Crankcase Emissions

For several years, emission regulations for on-highway engines have required that crankcase emissions be eliminated, except in the case of turbocharged diesel engines, which present special difficulties in designing for closed crankcase. EPA will propose to extend this requirement to covered nonroad engines (including the provision for excepting turbocharged diesel engines).

NMHC+NO_X / CO / PM in g/hp-hr (g/kW-hr)

hp(kW)	1999	2000	2001	2002	2003	2004	2005	2006	2007	2008
				Tier 1			Tier 2*			
<11 (8)		7.8 (10.5)					5.6 (7.5)			
		6.0 (8.0)					6.0 (8.0)			
		0.74 (1.0)					0.60			
							(0.80)			
≥11 (8)		7.0 (9.5)					5.6 (7.5)			
<25 (19)		4.9 (6.6)					4.9 (6.6)			
		0.60 (0.80)					0.60			
							(0.80)			
≥25 (19)	7.0 (9.5)					5.6 (7.5)				
<50 (37)	4.1 (5.5)					4.1 (5.5)				
	0.60 (0.80)					0.44				
						(0.60)				
					Tier 2				Tier 3*	
≥50 (37)						5.6 (7.5)				3.5 (4.7)
<100 (75)						3.7 (5.0)				3.7 (5.0)
						0.30 (0.40)				**
≥100 (75)					4.9 (6.6)				3.0 (4.0)	
<175 (130)					3.7 (5.0)				3.7 (5.0)	
					0.22 (0.30)				**	
≥175 (130)					4.9 (6.6)			3.0 (4.0)		
<300 (225)					2.6 (3.5)			2.6 (3.5)		
					0.15 (0.20)			**		
≥300 (225)			4.8 (6.4)					3.0 (4.0)		
<600 (450)			2.6 (3.5)					2.6 (3.5)		
			0.15 (0.20)							
≥600 (450)				4.8 (6.4)				3.0 (4.0)		
<750 (560)				2.6 (3.5)				2.6 (3.5)		
				0.15 (0.20)				**		

[1] Currently, EPA is required under a court order to take final action on proposed regulations for CI marine engines by December 18, 1996. EPA will seek appropriate changes to this order regarding final action on CI marine engines less than 50 hp (37 kW) to conform to this SOP.

NMHC+NO_X / CO / PM in g/hp-hr (g/kW-hr)										
hp(kW)	1999	2000	2001	2002	2003	2004	2005	2006	2007	2008
≥750 (560)	.....	.....	.....	.....	.....	.....	.....	4.8 (6.4)		
	.....	.....	.....	.....	.....	.....	.....	2.6 (3.5)		
	.....	.....	.....	.....	.....	.....	.....	0.15 (0.20)		

* These standards are subject to a feasibility review as discussed in Section 4.
** See above discussion on PM standards.

3. Test Procedures

In adopting a steady-state test cycle for its Tier 1 final rule, EPA stated that further study will be required to better characterize the nature and level of transient operation experienced by nonroad engines in actual use. The Signatories recognize that additional data would be beneficial in assessing the adequacy of the steady-state test in achieving control of regulated emissions, especially PM, in use. Other test parameters, such as the composition of the test fuel, may also impact the program's success in controlling in-use emissions.

The Signatories further recognize: (1) the crucial role that the test procedure plays in ensuring real emissions control in use, (2) the critical importance of in-use emission reductions in improving air quality and in determining state implementation plan credits under the Clean Air Act, (3) the effect that changes to test procedures could have on industry's ability to design, test and produce engines that comply with the applicable standards in the time periods contemplated by the SOP, (4) the need for a well-planned and well-coordinated test program to settle the issue of test procedure adequacy, (5) the value of proceeding in concert with international standard setting organizations in adopting a harmonized test procedure, and (6) the potential for this to be a lengthy process.

In order to achieve major NOx reductions as early as possible, EPA will propose that the current steady-state test be retained in the adoption of this SOP's standards. In addition, the Signatories will initiate a comprehensive test program, coordinated by EPA and cooperatively executed, to evaluate the adequacy of the current test procedure for achieving in-use emissions control. The test program will be initiated within six months of signing this SOP and will be completed by December 1998. The Signatories will also engage interested parties in the European Union (EU) in this comprehensive test program with the goal of gaining their participation as partners, if possible. Should the results of the testing program indicate that the test procedure does not achieve adequate control of emissions in use, EPA will initiate action to revise the test procedure if another test procedure is expected to provide significantly better control.

It is recognized that the standards in the SOP are based on the current steady-state test procedure. Further, all Signatories recognize that any test cycle changes or additions would likely complicate and delay industry's ability to research, design, test, and produce engines that comply with the standards contained in the SOP. As a result, any proposal to revise the current test procedure would propose that the revision not be implemented before Tier 3. Any changes in the test procedure will be taken into consideration as part of the Tier 3 feasibility review outlined below.

Engines rated at under 50 hp are not subject to the current Tier 1 standards and test procedure.

The Signatories recognize that the manufacturer signatories' agreement to the standards for these engines set forth in Section 2 of this SOP is based on the assumption that the following test cycles are adopted:

Land-based CI engines

Variable- and constant-speed <25 hp (19 kW) .....ISO 8178 G2
Variable-speed 25–50 hp (19–37 kW) .....ISO 8178 C1
Constant-speed 25–50 hp (19–37 kW) .....ISO 8178 D2

Auxiliary marine CI engines

Variable- and constant-speed <25 hp (19 kW) .....ISO 8178 G2
Variable-speed 25–50 hp (19–37) kW .....ISO 8178 C1
Constant-speed 25–50 hp (19–37) kW .....ISO 8178 D2

Propulsion marine CI engines <50 hp (37 kW) .....ISO 8178 E3

In addition, the Signatories recognize that the manufacturer signatories' agreement to the application of the standards set forth in Section 2 of this SOP to land-based constant-speed engines rated at over 50 hp is based on the assumption that the ISO 8178 D2 test cycle is adopted for these engines as an optional alternative to the current steady-state test. EPA will assess the adequacy of the above cycles for the indicated engines and propose appropriate cycles in the NPRM. If EPA should propose different cycles, then EPA will reassess the feasibility of the standards in light of the proposed cycles.

4. Feasibility Review

In order to assess the progress of the industry in meeting the Tier 3 standards and effect dates for over 50 hp engines and Tier 2 standards and effect dates for under 50 hp engines (hereafter collectively, the ''Later Standards''), and to ensure the lowest appropriate standard levels at the earliest appropriate time, EPA shall conduct a review of any rule adopting the Later Standards set forth in this SOP. This review will conclude in 2001 and will commence with a notice providing opportunity for public comment on whether or not the standards are technologically feasible and otherwise appropriate under the Clean Air Act. After the public comment period, EPA will take final action on the review under Section 307 of the Clean Air Act. Should the Agency conclude as a result of this review that these standards are not technologically feasible, or are otherwise not appropriate under the Clean Air Act, it shall revise the rule as appropriate. In any such revision, the NMHC+NOx standards are not expected to be raised more than 1.0 g/hp-hr (1.3 g/kW-hr), assuming no change in the PM and CO standards.

In reviewing the rulemaking as set forth above, EPA shall review the need for and feasibility and cost of the Later Standards, including, but not limited to: (1) the need to provide engine and equipment manufacturers an adequate period in which to recoup the capital investment required to achieve the previous standards; (2) the need to provide engine and equipment manufacturers no less than four full years of leadtime[2] between the time the feasibility review is finalized and the Later Standards become effective (while maintaining the engine category phase-in set forth in Section 2 above); (3) the need to assess the suitability, effectiveness and cost of transferring on-highway engine technology to nonroad engines and equipment; and (4) the need to assess the costs associated with redesigning equipment to accommodate the Later Standards.

The Signatories acknowledge that the standards set forth in this SOP will require a substantial investment for nonroad engine and equipment manufacturers, and their customers, and that the affected nonroad industry ordinarily requires a substantial period of stability in which to recoup such an investment. The period of stability between the previous and Later Standards ordinarily would be too short a time in which to reasonably recoup the investment needed to comply with the previous standards before imposing additional costs to comply with the Later Standards. Thus, the Signatories agree that the Later Standards in this SOP are based on the premise that no significant equipment redesign beyond that required to accommodate engines meeting the previous standards will be required to accommodate engines meeting the Later Standards.

As part of the review discussed in this Section, EPA will solicit information as to whether equipment redesign will be required as a result of changes to engines that will be required to meet the Later Standards. Should such equipment redesign be required, EPA will assess its significance, taking into account the cost and technical difficulty of such redesign, the need for a period of stability to reasonably recoup the investment in equipment redesign to meet the previous standards, the number of equipment models affected, and other relevant factors. If significant equipment redesign is required to accommodate engines meeting the Later

[2] In the case of engines rated at less than 50 hp, no less than two full years of leadtime.

Standards, EPA will propose appropriate measures to address the burden of such redesign. Such measures would include flexibilities similar to those set forth in Section 5 below, a minimum two-year[3] adjustment of the time between the previous standards and Later Standards for all engine families in each affected power category, an adjustment to the Later Standards to address the need for the redesign, or some combination thereof. EPA also may propose additional measures as appropriate under the Clean Air Act. EPA and ARB acknowledge that this SOP will require the industry to make a commitment to meet the Later Standards that will require a substantial period of stability.

EPA's review and assessment of the feasibility and cost of the Later Standards will include a review of the costs associated with the Later Standards on a marginal cost basis, taking into consideration total equipment production and operating costs, not just engine costs. If this assessment shows that the nonroad equipment industry will experience significant adverse impacts from changes in standards that are too frequent, rapid, or costly, EPA further commits to propose relaxing the standards and/or delaying the effective date of the standards, consistent with relevant provisions of the Clean Air Act.

The Signatories shall meet periodically to provide updates on their efforts and progress in complying with this SOP.

5. Implementation Flexibility

The Signatories recognize that new emission standards may create challenges for engine and equipment manufacturers beyond simply developing low-emission technologies. The nonroad industry is characterized by a diversity in engine models and equipment applications, many of which have small markets, making it difficult to rapidly and frequently implement design changes across wide product lines. Even small changes in engine designs can create major difficulties for equipment makers with low volume models, diverse product lines, or inadequate leadtime to respond to the changes. If engine makers were to discontinue engine models made in small volumes, this could cause market disruptions, especially for small manufacturers of equipment who buy these engines, and their customers.

Problems of this sort could be dealt with by phasing new standards in very gradually. However, in order to gain the desired air quality benefits as early as possible, this SOP instead aims to resolve the problem by broadening the flexibility granted to equipment manufacturers by providing them implementation options. Thus, EPA will propose programs whereby, on an annual basis, an equipment manufacturer would be allowed to install engines not meeting the otherwise applicable Tier 2 or 3 standards for engines 50 hp or higher in some of its equipment (Tier 1 standards for engines less than 50 hp). The following subsection describes two such programs that will be proposed, based on a percent-of-sales approach. The Signatories agree to work together in developing alternative flexibility proposals, with the understanding that these alternatives will not involve a projected loss in overall emission benefits over that entailed in the below-described program. One alternative approach under consideration would exempt equipment on an application-specific basis; EPA will, at a minimum, seek comment on such an approach in the NPRM.

a. Equipment Manufacturer Phase-in

Engines 50 hp or higher. For engines rated at 50 hp or higher, EPA will propose to allow each equipment manufacturer to install engines certified to the Tier 1 standards in a maximum of 15 percent of the equipment produced for sale in the United States during the first year that a new Tier 2 standard applies, and in a maximum of 5 percent during each of the six years thereafter. This allowance would continue for a total of seven years after Tier 2 standards become effective for each engine category. At the end of this allowance period, equipment manufacturers would be required to install Tier 3 engines (or Tier 2 engines in any engine categories without Tier 3 standards) in all new equipment using engines in the category. However, if the effective dates of Tier 3 standards in any engine category are delayed beyond those set forth in Section 2, the allowance period for that engine category would be extended by the same period of time. For manufacturers electing to take advantage of the special flexibility provision for farm and logging equipment described below, the above-described flexibility provision would apply to just the non-farm/logging equipment the manufacturer sells.

To avoid disadvantaging smaller companies with limited product offerings, manufacturers would be allowed to exceed the above percent of production allowances during the same years affected by the above allowance program, provided they limit the installation of Tier 1 engines to a single equipment model with an annual production level (for U.S. sales) of 100 pieces or less.

In addition to the above general flexibility allowances, EPA will propose that manufacturers of farming or logging equipment will be allowed to install Tier 1 engines in a maximum of 30 percent of this equipment (produced for sale in the United States) during the first year that a new Tier 2 standard applies, and in a maximum of 15 percent for each of the seven years thereafter. This allowance would continue for a total of eight years after Tier 2 standards become effective for each engine category. At the end of this allowance period, equipment manufacturers would be required to install Tier 3 engines (or Tier 2 engines in any engine categories without Tier 3 standards) in all new farm or logging equipment using engines in the category. However, if the effective dates of Tier 3 standards in any engine category are delayed beyond those set forth in Section 2, the allowance period for that engine category would be extended by the same period of time.

Nothing set forth above would change the rules established in the Tier 1 standards which allow equipment manufacturers to use up existing stocks of noncomplying engines at the time a new standard takes effect.

Engines less than 50 hp. EPA will propose flexibilities as described above for equipment manufacturers who install <50 hp engines into their equipment, except as follows:

(1) Equipment manufacturers will be allowed to install unregulated engines instead of Tier 1 engines.

(2) The flexibilities will expire after a total of four years. When they expire manufacturers must install certified engines in all equipment.

(3) A delay of the effective date for the <50 hp Tier 2 standards does not affect the expiration date of the flexibilities.

b. Engine Manufacturer ABT and Continued Sales of Previous-Standard Engines

EPA finalized an averaging, banking, and trading (ABT) program in its Tier 1 rule to help engine manufacturers meet the new standards. Consistent with the NPRM for heavy-duty on-highway engines, EPA will propose to modify the existing ABT program to eliminate any limit on credit life, to eliminate any discounts in the way credits are calculated, and to make ABT available for NMHC+NO_X and PM. These provisions will apply to all of the standards set forth in Section 2 except as discussed below. In recognition of the role ABT plays in facilitating the introduction of new standards, EPA will reassess the appropriateness of these provisions as part of the feasibility review discussed in Section 4. The Signatories recognize that the manufacturers have agreed to the standards set forth in this SOP on the condition that the changes that EPA will propose in the ABT program are finalized and made a part of these standards.

EPA will also propose three special provisions for the ABT program for engines rated at less than 25 hp. First, no credits generated from the sale of these engines would be allowed to be used to demonstrate compliance for engines rated above 25 hp. Second, all credits generated from the sale of Tier 1 under 25 hp engines would expire at the end of 2007. Finally, credits from the sale of Tier 1 under 25 hp engines would only be generated by engine families with family emission limits of less than 5.6 g/hp-hr (7.5 g/kW-hr) for NMHC+NO_X credits and 0.60 g/hp-hr (0.80 g/kW-hr) for PM credits, and these credits would be calculated against these baseline levels rather than against the actual Tier 1 standard levels.

In addition to these ABT provisions, EPA will propose that engine manufacturers be allowed to continue to build and sell the engines needed to meet the market demand created by the equipment manufacturer flexibility program set forth above. To avoid the creation of unfair business advantages, the engine manufacturer Signatories agree that, if they decide to continue the production of such engines, they will make them available for sale at reasonable prices to all interested buyers.

Finally, EPA also will propose to allow engine manufacturers to produce unregulated, Tier 1, or Tier 2 engines, as the case may be, to meet customer needs for replacement engines, so long as

[3] Minimum three years and one year for engines in the 175–300 hp and 300–600 hp categories, respectively.

manufacturers comply with the replacement engine regulations that EPA is developing.

6. Harmonization

The participants in this SOP recognize the value that harmonizing standards within the United States would have on the cost of producing engines and equipment. EPA and the California Air Resources Board will pursue harmonized standards and test procedures for nonroad engines covered by this SOP such that an engine family tested and certified by EPA could be sold in California and, similarly, an engine family tested and certified in California could be sold in the rest of the country. California acknowledges that the emission standards set forth in this SOP meet its needs for emission reductions for the engines covered by this SOP. However, if these standards should not be implemented as proposed, California's obligations to comply with State and Federal law, including its State Implementation Plan, take precedence over this SOP.

Furthermore, the global nature of the nonroad equipment and engine markets argues for maximum harmonization between the U.S. standards and test procedures and those of other nations. In particular, the European Union has developed standards very similar to EPA's Tier 1 standards and has proposed its own Tier 2 standards. The Signatories support the goal of continued harmonization and intend to work with the EU, Japan, and other regulatory bodies in developing harmonized future standards, including provisions for implementation flexibility. Harmonized standards and test procedures will be pursued in the program developed under this SOP to the maximum extent possible, provided that these measures do not compromise the other provisions of this SOP or the primary purpose of the program, which is to meet the air quality needs of the United States.

7. Fuels and Lower Emitting Alternatives

The standards set forth above contemplate the possibility of transferring on-highway technology to nonroad engines. The Signatories recognize that: (1) on-highway engines currently are operated on higher quality fuel than nonroad engines, (2) fuel composition has a significant impact on emission performance, (3) changes in the composition and improvements in the quality of nonroad fuels may be needed to make the Tier 3 standards technologically feasible and otherwise appropriate under the Act.

A number of states and other interested parties have expressed strong interest in programs to reduce emissions from nonroad engines beyond the levels established in this SOP. These parties believe that if a program were in place to certify low emitting engines (both diesel and alternative fuel engines), a market for these engines could be created through a variety of incentives including, but not limited to, marketable emission credits and the prominent labeling of low-polluting equipment as such. This certification program would be dependent on the establishment of a test procedure which reasonably evaluates the effectiveness of these engines in achieving real in-use emissions reductions.

Therefore, EPA shall propose an optional program for the certification of very low-emitting engines. This program would include, as needed, optional test procedures and standards that would encourage the sale of engines providing benefits beyond those corresponding to the program described elsewhere in this SOP. In addition, EPA will consider other programs to encourage the use of low-emitting engines and emission-reducing fuels.

8. Durability

All Signatories recognize that it is important that emissions control be maintained throughout the life of the engine. The Signatories will work together to develop appropriate measures which ensure that emission improvements are maintained in use.

9. Certification and Compliance

All Signatories recognize that it is important to minimize the costs associated with certification and they commit to working together to streamline and simplify the certification process. Further, the Signatories acknowledge that the standards set forth in Section 2 of this SOP are based on the assumption that there will be no changes to the enforcement program adopted as part of the Tier 1 rule, except as specifically set forth in this SOP. Finally, the Signatories also recognize that engine manufacturers will be required to undertake significant engineering challenges in relatively short time frames in order to meet the Tier 2 and Tier 3 standards including the challenge of stabilizing initial production variability. Therefore, EPA will only impose selective enforcement audits (SEA's) during the first year in which a standard is in effect for those engine families where strong evidence exists that SEA failure would be likely.

10. Research Agreement

The Signatories recognize the benefits of a joint industry/government research program with the goal of developing engine technologies which can meet and exceed the standards for nonroad engines outlined in this SOP. The Signatories will undertake development of a separate research agreement with goals of reducing NO_X emissions to 1.5 g/hp-hr (2.0 g/kW-hr) and PM emissions to 0.05 g/hp-hr (0.07 g/kW-hr), while maintaining attributes of current nonroad diesel engines such as performance, reliability, durability, safety, efficiency, and compatibility with nonroad equipment. These characteristics have allowed current nonroad diesel engines to serve as the pillar of the international nonroad equipment industry. This research agreement would include certain of the industry signatories below, EPA, ARB, and other organizations, such as the U.S. Department of Energy, as are approved by the participants.

[FR Doc. 96–32970 Filed 12–31–96; 8:45 am]

BILLING CODE 6560–50–P

federal register

Thursday
January 2, 1997

Part IV

Environmental Protection Agency

40 CFR Part 51

Proposed Implementation Requirements for Reduction of Sulfur Oxide (Sulfur Dioxide) Emissions; Proposed Rule

ENVIRONMENTAL PROTECTION AGENCY

40 CFR Part 51

[AD–FRL–5670–8]

RIN 2060–AA61

Proposed Implementation Requirements for Reduction of Sulfur Oxide (Sulfur Dioxide) Emissions

AGENCY: Environmental Protection Agency (EPA).

ACTION: Proposed rule.

SUMMARY: The EPA is proposing a new intervention level program under the authority of sections 301(a)(1) and 303 of the Clean Air Act (Act) to supplement protection provided by the primary and secondary sulfur dioxide (SO_2) national ambient air quality standards (NAAQS). The program proposed today is in lieu of the three alternative implementation strategies for reducing high 5-minute SO_2 concentrations in the ambient air proposed on March 7, 1995.

The intervention level program addresses EPA's concern that a segment of the asthmatic population may be at increased health risk when exposed to 5-minute peak concentrations of SO_2 in the ambient air while exercising (''exercising'' in this case can include walking up stairs or hills, as well as more strenuous activities). At certain concentration levels or frequencies, such peaks can represent imminent and substantial endangerment to public health. This proposed program also responds to comments received on the March 7, 1995 proposal.

In addition, EPA is reproposing the implementation strategy for identifying and prioritizing areas with potential 5-minute SO_2 peaks. The changes to the monitoring strategy discussed in the March 7, 1995 proposal address public comments regarding the flexibility of the strategy and the criteria used to identify sources for monitoring.

Finally, EPA has reviewed comments concerning the revisions to the 24-hour significant harm levels (SHL) for SO_2 discussed in the March 7, 1995 proposal. After further consideration, the EPA now believes the proposed revisions to those levels are not needed at this time. The EPA is requesting comment on whether the proposed changes to the SHL are necessary or should be withdrawn.

DATES: Written comments on this proposal must be received by March 3, 1997. Persons wishing to present oral testimony pertaining to this notice should contact EPA at the address listed below under **FOR FURTHER INFORMATION CONTACT** by January 17, 1997. If anyone contacts EPA requesting to speak at a public hearing, a separate notice will be published announcing the date, time, and place where the hearing will be held.

ADDRESSES: Submit comments on this proposal (two copies are preferred) to: Office of Air and Radiation Docket and Information Center (Air Docket 6102), Room M 1500, U.S. Environmental Protection Agency, Attention: Docket No. A–94–55, 401 M Street, SW, Washington, DC 20460. The docket may be inspected between 8:00 a.m. and 5:30 p.m. on weekdays, and a reasonable fee may be charged for copying. The Air Docket may be called at (202) 260–7548. For the availability of related information, see **SUPPLEMENTARY INFORMATION.**

FOR FURTHER INFORMATION CONTACT: Eric L. Crump, Integrated Policies and Strategies Group (MD–15), U.S. Environmental Protection Agency, Research Triangle Park, NC 27711, telephone (919) 541–4719.

SUPPLEMENTARY INFORMATION:

Regulated Entities

Entities potentially regulated by this action are those which contribute to 5-minute ambient SO_2 concentrations that pose a health threat to sensitive, exposed populations. Regulated categories and entities would include:

Category	Examples of regulated entities
Industry	Pulp and paper mills, lead, aluminum, and copper smelters, petroleum refineries, iron and steel mills, carbon black manufacturers, portland cement plants, oil and gas extraction processes, fertilizer manufacturers, industrial and utility boilers, sulfuric acid plants.
Federal government	Federal agencies which operate industrial or utility boilers.
State/tribal government	State/tribal agencies which operate industrial or utility boilers.

This table is not intended to be exhaustive; furthermore, entities listed in this table would not necessarily be subject to regulation under this proposed action. This table is intended only as a guide for readers regarding entities likely to be regulated by this action. This table lists the types of entities that EPA believes could potentially be regulated by this action. Other types of entities not listed in the table could also be regulated. To determine whether your facility, company, business or organization would be regulated by this proposed action, you should ascertain whether your facility, company, business, or organization (1) emits SO_2, and (2) is located in an area subject to ambient air concentrations that exceed the criteria in § 51.154 of 40 CFR. If you have questions regarding the applicability of this action to a particular entity, consult the person listed in the preceding **FOR FURTHER INFORMATION CONTACT** section.

Availability of Related Information.

The 1982 revised criteria document, Air Quality Criteria for Particulate Matter and Sulfur Oxides (three volumes, EPA–600/8–82–029af-cf, December 1982; Volume I, NTIS # PB–84–120401, $36.50 paper copy and $9.00 microfiche; Volume II, NTIS # PB–84–120419, $77.00 paper copy and $9.00 microfiche; Volume III, NTIS # PB–84–120427, $77.00 paper copy and $20.50 microfiche); the 1986 criteria document addendum, Second Addendum to Air Quality Criteria for Particulate Matter and Sulfur Oxides (1982): Assessment of Newly Available Health Effects Information (EPA/600/8–86–020–F, NTIS # PB–87–176574, $36.50 paper copy and $9.00 microfiche); the 1994 criteria document supplement, Supplement to the Second Addendum (1986) to Air Quality Criteria for Particulate Matter and Sulfur Oxides (1982): Assessment of New Findings on Sulfur Dioxide Acute Exposure Health Effects in Asthmatic Individuals (1994) (EPA–600/FP–93/002); the 1982 staff paper, Review of the National Ambient Air Quality Standards for Sulfur Oxides: Assessment of Scientific and Technical Information (EPA–450/5–82–007, November 1982; NTIS # PB–84–102920, $36.50 paper copy and $9.00 microfiche); the 1986 staff paper addendum, Review of the National Ambient Air Quality Standards for Sulfur Oxides: Updated Assessment of Scientific and Technical Information (EPA–450/05–86–013, December 1986; NTIS # PB–87–200259, $19.50 paper copy and $9.00 microfiche) and the 1994 staff paper supplement, Review of the National Ambient Air Quality

Standards For Sulfur Oxides: Updated Assessment of Scientific and Technical Information, Supplement to the 1986 OAQPS Staff Paper Addendum (1994) (EPA–452/R–94–013, September 1994; NTIS # PB–95–124160, $27.00 paper copy and $12.50 microfiche) are available from: U.S. Department of Commerce, National Technical Information Service, 5285 Port Royal Road, Springfield, Virginia 22161, or call 1–800–553–NTIS. (Add $3.00 handling charge per order.)

Table of Contents

I. Background
A. Overview
B. Rulemaking Docket
II. Intervention Level Program
A. Program Highlights
B. Health Effects and Basis for Levels
C. Flexible Implementation Strategy
III. Legal Authority
IV. Program Implementation
A. Requirements Associated with the Implementation of the Intervention Level Program
B. Compliance and Enforcement Issues
V. Relationship Between the Intervention Level Program and Existing Programs
A. Impact on SIPs, Attainment Planning and Implementation
B. Malfunctions
C. Significant Harm Level Program
D. Acid Rain Program
VI. Community Involvement in the Intervention Level Program
VII. Source Prioritization and Monitor Allocation
VIII. Reconsideration of Proposed 24–Hour Significant Harm Level and Episodes Criteria
IX. Comments and the Public Docket
X. Administrative Requirements
A. Executive Order 12866
B. Monitoring and Administrative Costs
C. Regulatory Flexibility Analysis
D. Impact on Reporting Requirements
E. Unfunded Mandates Reform Act
F. Environmental Justice
References

SUPPLEMENTARY INFORMATION:

I. Background

A. Overview

As discussed in the November 15, 1994 proposal (59 FR 58958), EPA completed a thorough review of the air quality criteria and the current SO_2 NAAQS required by sections 108 and 109 of the Act and concluded provisionally that the current 24-hour and annual primary standards provide adequate protection against the effects associated with those averaging periods. The key issue that emerged from the review is whether additional regulatory measures are needed to provide additional protection for asthmatic individuals that may be exposed to high 5-minute peak SO_2 concentrations.

As explained in the March 7, 1995 Federal Register proposal (60 FR 12492), the available air quality and exposure data indicate that the likelihood that the asthmatic population in general would be exposed to 5-minute peak SO_2 concentrations of concern, while outdoors and at exercise, is very low when viewed from a national perspective. The data indicate, however, that high peak SO_2 concentrations can occur around certain sources with some frequency, and as a result, asthmatic individuals in the vicinity of such sources would be subject to a greater health risk than asthmatics not subject to such peaks or the nonasthmatic population. These assessments lead EPA to believe that if any additional regulatory measures are adopted to provide additional protection, they should be addressed through an approach that focuses on those locations where the sensitive population is more likely to be exposed to high 5-minute peak SO_2 concentrations.

Based on these considerations, EPA requested comment on three regulatory measures proposed on March 7, 1995 to address high 5-minute SO_2 peaks: (1) augmenting implementation of the existing standards by focusing on those sources or source types likely to produce high 5-minute peak SO_2 concentrations; (2) establishing a new regulatory program under section 303 of the Act to supplement the protection provided by the existing NAAQS; and (3) supplementing the existing NAAQS with a 5-minute NAAQS of 0.60 parts per million (ppm).

The public comments received represented various concerns regarding the three alternatives. Of the many comments received, the following arguments appeared to be most compelling: (1) short-term peak emissions are more of a localized issue rather than a widespread concern and that instead of a broad national regulatory program, States and tribes should be given the authority to address such issues; and (2) States and tribes need more flexibility to address situations that create exposures to high short-term ambient concentrations, especially in cases when the short-term peaks are rare and the potential for exposure is low (for example, when the source is located in a relatively isolated area). The comments received confirm EPA's original assessment that high 5-minute peak episodes of SO_2 are not a uniformly widespread problem; rather, these episodes are limited to certain localized areas throughout the country. The EPA now believes that a national regulatory program developed for implementation by every State and tribe would be counterproductive, placing an administrative burden on many parts of the country that are not subject to risk from these peak concentrations.

Although these episodes are few, it is clear that 5-minute SO_2 ambient concentration peaks pose a health threat to sensitive, exposed populations, and that the severity of the threat depends upon the concentration and frequency of peak episodes and the size of the population subject to the peak episodes. Because every area that is subject to significant short-term peaks has its own unique characteristics, EPA agrees it is prudent for States, local governments, and tribal governments to assess each individual situation, and if a significant threat to public health exists, act appropriately and efficiently to reduce the risk to the public. The EPA wishes to establish an implementation program that (1) effectively addresses real health concerns, (2) provides States, tribes, and local communities with a basis for taking protective action, and (3) provides flexibility to address a given situation appropriately.

For the reasons discussed in the May 22, 1996 Federal Register final decision (61 FR 25566), EPA has concluded that revisions to the existing SO_2 NAAQS are not appropriate at this time. In lieu of the three alternative approaches originally proposed to address 5-minute concentrations, EPA now proposes an intervention level program under the authority of section 303 of the Act to address the risk presented by 5-minute SO_2 concentrations.

Because health effects caused by 5-minute SO_2 ambient concentrations tend to be localized problems, EPA believes the intervention level program is the appropriate approach to address this concern. Instead of a uniform nationwide approach that might call for unnecessary administrative effort, this program would allow placement of resources and efforts precisely where the problems are. It would allow States, tribes, and local governments to analyze the variable issues relevant to peak concentration episodes in their jurisdiction, giving them the flexibility to address the sources of the peak emissions more efficiently and appropriately. The intervention level program would also provide a catalyst for community-based approaches to environmental protection by encouraging States and tribes to incorporate citizen concerns and complaints into their criteria for assessing public health risk.

B. Rulemaking Docket

Docket No. A–94–55 has been established for supporting documentation for the action proposed today. The EPA established a standard review docket (Docket No. A–79–28) for the sulfur oxides review in July 1979. The EPA also established a rulemaking docket (Docket No. A–84–25) for the April 26, 1988 proposal under section 307(d) of the Act. Docket No. A–84–25 was used for the most current review of the SO_2 NAAQS. Both of these dockets, as well as a separate docket established for criteria document revision (Docket No. ECAO–CD–79–1), are hereby incorporated into the rulemaking docket for the action proposed today.

II. Intervention Level Program

A. Program Highlights

The proposed intervention level program is derived in part from the SHL program, which has served in the past as a means for implementing the authority granted under section 303 of the Act. The SHL program was designed to address emergency episodes that occur where pollution levels build up over a period of time to unhealthy levels. The SHL program establishes a specific pollutant concentration within a given time period that is known to pose a significant threat to human health and that would require specific measures on the part of the State or tribe and emission sources to correct. In addition, the program establishes several degrees or levels of response which are triggered by pollutant concentrations below the SHL. As the concentration of a pollutant rises to each level, emission sources in the area are required to take increasingly restrictive action to reduce emissions as specified in the contingency plan within an approved State implementation plan (SIP). The SHL program is a proactive program designed to prevent an area from ever reaching the SHL.

The EPA contemplated using a similar approach to address 5-minute peak emissions of SO_2, but believes the SHL program would not be the best means for addressing such short term peak episodes. A 5-minute ambient concentration peak encompasses a short period of time compared to the 3-hour and 24-hour periods used in the SHL program. The EPA believes it is impractical to expect industry, States, and tribes to have a predetermined course of corrective action in place to stop 5-minute peak episodes as they occur because 5-minute episodes would generally be over before remedial action could be taken to stop them. In the view of the Administrator, this situation calls for a more reactive approach as opposed to the proactive approach called for in the SHL program. The EPA believes that its authority under sections 301(a)(1) and 303 of the Act provides for the creation of a new program to address these short term peaks of SO_2—the intervention level program.

The intervention level program proposed herein would be similar to the SHL program in that it would establish concentration levels in the CFR that provide a basis for action by States, tribes and industry if those levels are reached. As a supplement to the four concentration levels specified in the SHL program, EPA proposes a range of concentrations under the intervention level program. The lower boundary of this range would be the concern level, set at 0.60 ppm of SO_2, based on a 5-minute hourly maximum value (a 5-minute hourly maximum value for SO_2 is the highest of the 5-minute averages from the 12 possible nonoverlapping periods during a clock hour). The upper boundary of this range would be the endangerment level, set at 2.0 ppm of SO_2, based on a 5-minute hourly maximum value. These intervention levels are based on the health criteria discussed below and in the May 22, 1996 part 50 final action (61 FR 25566), and would be used by States and tribes along with other factors to determine whether occurrences of 5-minute SO_2 concentrations require action to address ''* * * imminent and substantial endangerment to public health or welfare, or the environment * * *'', as stated in section 303 of the Act.

In the event that the concern level concentration is exceeded in a given area, and the State or tribe has reason to believe that the exceedance may constitute imminent and substantial endangerment, the State or tribe would assess the situation to determine whether intervention is appropriate. In making this determination, the State or tribe would consider the magnitude of the 5-minute peak concentrations; the frequency of the episodes (based on those episodes detected by monitors and an estimate of the number of 5-minute peaks not recorded by the monitoring network); the history and nature of citizen complaints; available information on potential population exposure, inferred in part by the population in the vicinity of the source; the type of process being used (i.e., one type of process within a source category may be less efficient and known to emit more SO_2 than another); the history of past upsets or malfunctions; the type of fuel used; knowledge of how well the source is controlled; and any other considerations the State or tribe finds to be appropriate. Because the health effects become more severe as the 5-minute SO_2 concentration approaches the endangerment level, it is reasonable to expect that the State or tribe would be more likely to determine that intervention is warranted, and that the degree of intervention judged to be necessary would increase. If the endangerment level is exceeded, thereby exposing a significant population to imminent and substantial endangerment, the State or tribe may consider taking immediate action to protect public health. Even in cases when the endangerment level is exceeded, it is conceivable that the State or tribe may determine that no action is warranted. For example, if the exceedance is linked to an unusual circumstance not likely to reoccur, or causes minimal impact on public health, the State or tribe may conclude that corrective measures are not needed at this time.

In general the State or tribe will assess the health risk and implement corrective measures under the intervention level program, not EPA. If necessary, EPA would take action under the authority of section 303, as appropriate, in the event that the State or tribe fails to address (1) imminent and substantial endangerment to public health presented by exceedances of the endangerment level, or (2) evidence that exceedances above the concern level (but below the endangerment level) cause imminent and substantial endangerment due to their frequency, magnitude, and reported health impacts.

B. Health Effects and Basis for Levels

The health effects associated with exposures to the concern level, 0.60 ppm SO_2, 5-minute block average, were the focus of EPA's most recent review of the primary NAAQS for sulfur oxides (measured as sulfur dioxide). The health effects and the Administrator's conclusions about the public health risks associated with exposure to the concern level are thoroughly discussed in the EPA documents generated during that review: the criteria document supplement (EPA, 1994a), the staff paper supplement (EPA 1994b), the November 15, 1994 proposal (59 FR 58958) and the May 22, 1996 final decision on part 50 (61 FR 25566). These documents are incorporated into today's proposal by reference.

The EPA's concern about the potential public health consequences of exposures to short-term peaks of SO_2 arose from the extensive literature involving brief (2- to 10-min) controlled exposures of persons with mild (and, in some cases moderate) asthma across the

ranges of concentrations of SO_2 to greater than 2.0 ppm while at elevated ventilation rates. The major effect of SO_2 on sensitive asthmatic individuals is bronchoconstriction, usually evidenced in these studies by decreased lung function (i.e., decreased forced expiratory volume in 1 second (FEV_1) and increased specific airway resistance (SR_{aw})) and the occurrence of clinical symptoms such as wheezing, chest tightness, and shortness of breath. The proportion of asthmatic individuals who respond, the magnitude of the response and the occurrence of symptoms increase as SO_2 concentrations and ventilation rates increase. The criteria document supplement (EPA, 1994a) contains a summary of the literature on the health effects associated with brief exposures to SO_2.

Taking into account the available health effects studies and the body of comments on the health effects, the Administrator concluded in the May 22, 1996 final decision (61 FR 25566) that a substantial percentage (20 percent or more) of mild-to-moderate asthmatic individuals exposed to 0.60 to 1.0 ppm SO_2 for 5 to 10 minutes at elevated ventilation rates, such as would be expected during moderate exercise, would be expected to have lung function changes and severity of respiratory symptoms that clearly exceed those experienced from typical daily variation in lung function or in response to other stimuli (e.g., moderate exercise or cold/dry air). The bronchoconstriction caused by brief exposures to 0.6 to 1.0 ppm SO_2 is transient (i.e., measurements of lung function start to improve when exposure ceases or when the individual ceases to exercise and ventilation rates return to resting levels). However, for many responders, the effects are likely to be both perceptible and thought to be of some health concern; that is, likely to cause some disruption of ongoing activities, use of bronchodilator medication, and/or possibly seeking of medical attention.

During the regulatory review process, there was some agreement by medical experts that at this concentration, 0.60 ppm SO_2, the frequency with which such effects are experienced may affect the degree of public health risk. After taking into account the broad range of opinions expressed by Clean Air Scientific Advisory Committee (CASAC) members, medical experts, and the public in the part 50 final decision, the Administrator concluded that repeated occurrences of such effects should be regarded as significant from a public health standpoint. Furthermore, the Administrator determined that the likely frequency of occurrence of such effects should be a consideration in assessing the overall public health risk in a given situation.

The available scientific literature indicates that in the range of 0.60 to 2.0 ppm SO_2, there is a dose-response relationship between SO_2 concentration and (1) the magnitude of the lung function changes, and (2) the proportion of the asthmatic individuals expected to respond. At 1.0 ppm SO_2, 5-minute block average, approximately 60 percent of the mild-to-moderate asthmatic individuals at elevated ventilation rates are likely to respond. The health effects become more pronounced, with more substantial changes in pulmonary function accompanied by symptoms. Asthmatic individuals may experience mild bronchoconstriction without symptoms while at rest (EPA, 1986a; EPA, 1986b).

At 2.0 ppm SO_2, 5-minute block average, approximately 80 percent of mild-to-moderate asthmatic individuals at elevated ventilation rates are likely to respond. Effects can range from moderate to incapacitating. Asthmatic individuals at rest are likely to experience moderate bronchoconstriction. A moderate episode of bronchoconstriction can increase the lung function index SR_{aw} by 100 to 200 percent, with a severe response being an SR_{aw} increase of > 200 percent, and incapacitating bronchoconstriction entails SR_{aw} increases much greater than 300 percent (EPA, 1994a). Horstman et al. (1986) report that 12 (of 27) subjects in the Roger et al. (1985) study, whose SR_{aw} values did not increase by 100 percent at 1.0 ppm SO_2 or lower levels, were also exposed to 2.0 ppm using the same protocol. At this level, seven of these less sensitive asthmatic individuals had SR_{aw} increases of from 100 to over 600 percent. For a more detailed discussion of the studies which support this assessment, see the 1986 criteria document addendum (Table 7; EPA, 1986a), and section IIB of the 1986 staff paper addendum (EPA, 1986b).

At 3.0 to 5.0 ppm SO_2, nonasthmatic adults at mild exercise will experience bronchoconstriction, and asthmatic individuals at rest will likely experience pronounced bronchoconstriction. For a more detailed discussion of the health effects of exposure to these higher concentrations of SO_2, see the 1982 criteria document (EPA, 1982a) and the 1982 staff paper (EPA, 1982b). Based upon this information, EPA believes that exposure of a sensitive population to a 5-minute ambient concentration of 2.0 ppm or above would pose an imminent and substantial endangerment to public health and welfare and, therefore, would justify corrective action under the authority of section 303.

C. Flexible Implementation Strategy

Like the previously proposed implementation alternatives, a key element of this new implementation strategy is the relocation of existing SO_2 monitors to areas near point sources where peak SO_2 concentrations may exist. Because the monitors in the existing State and local area monitoring stations (SLAMS) network were designed to characterize urban ambient air quality associated with 3-hour, 24-hour, and annual SO_2 concentrations, they are not always the appropriate means for measuring 5-minute peak SO_2 concentrations from point sources. To make existing monitors available for the measurement of short-term peak concentrations, EPA proposed certain technical changes to the requirements for ambient air monitoring reference and equivalent methods (40 CFR part 53) and revisions to the ambient air quality surveillance requirements (40 CFR part 58) in the November 15, 1994 (59 FR 58958) and the March 7, 1995 (60 FR 12492) proposals, respectively.

The EPA believes these changes to the monitoring requirements will give the States and tribes the flexibility to relocate existing monitors to areas where 5-minute peak concentrations may be of concern, and to respan the monitors to measure these peaks. Under the intervention level program, the States and tribes would be able to identify areas to be monitored based on State or tribal priorities, source emissions, citizen complaints, location of sensitive populations, or other variables. Upon request, EPA would assist State and tribal efforts to identify and prioritize areas for monitoring 5-minute peak concentrations by providing information compiled from various databases. The EPA would leave the discretion on how best to utilize this information in siting monitors to the States and tribes. If the State or tribe has ample reason to believe that areas within its jurisdiction do not experience health risks from 5-minute peak concentrations (for example, no sources with significant compliance issues, maintenance problems or upsets; no complaints about detrimental health effects from short-term peak SO_2 concentrations), the State or tribe would be justified in not relocating SO_2 monitors for this purpose.

III. Legal Authority

In the November 15, 1994 Federal Register action (59 FR 58958), EPA

discussed the legal authority for a proposed regulatory program under the authority of sections 110(a)(2)(G), 301, and 303 of the Act. The March 7, 1995 proposal (60 FR 12492) described this program in greater detail. Although the intervention level program proposed herein differs from the section 303 program described in these actions, the basic objective and the legal authority to establish it remain the same. Consequently, the EPA continues to rely on the legal authority discussion regarding sections 301 and 303 contained in the November 15, 1994 proposal and hereby incorporates that discussion by reference (59 FR 58970–71).

In addition, the EPA believes that in some cases the potential health effects that may result from a 5-minute peak SO_2 concentration above the concern level of 0.60 ppm could be an indicator of substantial endangerment to public health and welfare, depending on the frequency and magnitude of the ambient peak concentrations and the likelihood that asthmatic individuals will experience exposures of concern. For example, concentrations above the concern level may present an unacceptable risk of harm to asthmatic individuals who have not premedicated with beta-agonist bronchodilators and are exposed at elevated ventilation. Action under the authority of section 114 to investigate the cause and potential effect of ambient concentrations above the concern level, followed by corrective action under the authority of section 303, might therefore be warranted in some cases. Furthermore, EPA believes that exposure of a sensitive population to a 5-minute ambient concentration of 2.0 ppm or above would pose an imminent and substantial endangerment to public health and welfare and, therefore, would justify corrective action under the authority of section 303.

Unlike the section 303 program EPA proposed on March 7, 1995, the intervention level program proposed today would not require States and tribes to submit revised contingency plans to EPA requiring specific actions for the State, tribe, and source to undertake once an established ambient SO_2 concentration is violated. The EPA believes that the approved SIP's currently in force provide the States with adequate general authorities to implement the intervention level program without submittal of revised contingency plans for approval by EPA. Section 110(a)(2)(G) of the Act requires that the SIP contingency plans contain adequate authority to implement section 303 programs. Furthermore, the SIP's contain general enforcement authority that allows States to request information and conduct inspections—in short, to gather the necessary data to determine the appropriate course of action in the event that 5-minute SO_2 peaks pose a threat to human health. Finally, many SIP's contain general prohibitions against air pollution which provide the States broad discretion to address source-specific problems. The EPA also believes that once the tribal rule proposed on August 25, 1994 (59 FR 43956) becomes final, tribal implementation plans (TIP's) will provide tribes with similar authority.

The EPA believes the general authority possessed by States and tribes to implement the intervention level program under section 303 is an advantage. By eliminating the need for States and tribes to revise their contingency plans, as well as the need for an extensive review and approval process, the intervention level program should minimize the potential administrative burden on the States and tribes. If a particular State SIP or tribal TIP does not contain adequate authority to implement the intervention level program, EPA expects the State/tribe to revise its SIP/TIP accordingly to provide the necessary authority. In the event that the State/tribe does not take prompt action to revise its SIP/TIP, EPA would issue a SIP/TIP call for the State/tribe. The EPA interprets sections 110(a)(2)(G) and 303 of the Act, along with section 301 (which grants general authority to prescribe regulations necessary to carry out the functions of the Administrator), as providing adequate legal authority to establish this program and to promulgate the necessary regulations to implement it.

IV. Program Implementation

A. Requirements Associated with Implementation of the Intervention Level Program

As stated earlier, EPA's intent in proposing the intervention level program is that the States and tribes would be given the flexibility to address particular sources of 5-minute SO_2 peak concentrations in the most efficient and appropriate manner, based on an area-specific analysis of the particular characteristics of peak ambient concentration episodes in their jurisdictions. The following discussion is intended as a guide for implementing the intervention level program and is not meant to be prescriptive.

The EPA believes that when the concern level of 0.60 ppm has been exceeded in a given area, the State or tribe should consider whether or not the situation presents a significant public health risk. If the number of exceedances per year are few in number, or linked to rare incidents, the State or tribe may determine that no further action is warranted unless the frequency or severity of the exceedances increases. If the concern level is exceeded on a more regular basis, or to a more severe degree, the State or tribe should conduct a more detailed analysis. The analysis could include elements such as identification of the sources that contribute most to the peak ambient concentrations, the number of observed and projected exceedances, the magnitude of the exceedances, the nature and location of the sources, the proximity of the sources to sensitive populations, and other pertinent factors needed to characterize the risk to public health. The State or tribe may choose to follow up the analysis with a compliance inspection of the sources that contribute to the peak ambient concentrations. If the magnitude of the peak concentrations is significantly higher than the concern level of 0.60 ppm (but still less than the endangerment level of 2.0 ppm), the State or tribe may choose to conduct a compliance inspection after only one exceedance. If any of the sources under consideration are out of compliance with their existing emission limits (based on the NAAQS or other air pollution requirements), then the State or tribe would take the necessary steps to bring the sources into compliance. If, however, the State or tribe determines a substantial threat to public health exists, but (1) finds it unlikely that bringing sources into compliance with their existing emission limits would prevent further exceedances of the concern level, or (2) determines the source to be in compliance with applicable emission limits, then further action in addition to assuring compliance may be needed. In such circumstances, the next step would be for the State, tribe and source to examine the sources of the peak concentrations. Once that is determined, an appropriate approach to address the high peak concentrations would need to be developed.

Under the intervention level program, EPA would not specify a time limit in which States, tribes and sources must take corrective action (whether it be control devices, process or operational modifications, or other selected protective approach). However, EPA expects that development and implementation of any course of corrective action for a given situation would occur expeditiously and efficiently, based on the risk to public

health; the specific processes or operations at the source that cause the peak episodes; the available options for addressing the public health risk; the reasonable lead time necessary to plan, design, procure and install control devices and process modifications, or to implement alternative approaches to control; and other pertinent considerations. Implementation need not wait until the process of incorporating the selected course of action into the SIP/TIP, permit, or other enforceable agreement is complete. Once the approach for addressing the public health risk has been determined, the State/tribe should issue a section 303 order to the source to expedite implementation of the selected action.

In determining the course of corrective action, States, tribes, and sources should keep in mind that the goal of the intervention level program is to prevent imminent and substantial endangerment to public health caused by short-term peak ambient concentrations. Control measures to prevent recurrences of 5-minute SO_2 peaks may include better maintenance of control equipment, better capture of fugitive emissions, raising the stack height (refer to section A under *Relationship between the Intervention Level Program and Existing Programs),* restriction of operations during times of peak exposure (e.g., conducting activities during hours when fewer people are outside), or other innovative courses of action. In some cases (e.g., areas where the risk is minimal due to low population density or where infrequent 5-minute peaks occur), after consultation with sources and the affected communities, the State or tribe may determine that control measures may not be the most appropriate means for reducing the risk to the public. In such cases, States or tribes, in consultation with sources and the impacted communities, may elect to address the health risk through alternative approaches. Examples of alternative approaches that States, sources, and communities might select are: public education campaigns for asthma prevention, public warning/notice of potential health problems due to peak episodes (e.g., a local alert system, posting of areas where short-term peaks occur), or providing support for State, tribal, or local public health programs. Should an alternative approach be chosen, the State/tribe should ensure that the alternative measures required of the source are federally enforceable.

As the concentration approaches the endangerment level of 2.0 ppm averaged over a 5-minute period, the health effects, as discussed earlier, will become more pronounced and severe. The EPA expects States and tribes will be more concerned about the potential impacts and be more assertive in pursuing corrective remedies with the sources as the 5-minute peak concentrations approach the endangerment level. At concentrations at or above the endangerment level, EPA believes that imminent and substantial endangerment to the public health and welfare *could* occur, *and if such is the case,* urgent corrective actions would be warranted. However, even an isolated exceedance of the endangerment level might not require corrective action if the State or tribe find that the circumstances related to the exceedance are not likely to reoccur, or that the risk of exposure to sensitive populations is minimal. Again, EPA encourages States and tribes to determine the appropriate course of action for each situation based on the potential for public exposure and the risk to public health. While the State/tribe would issue section 303 orders requiring urgent corrective actions, any long-term corrective actions would have the same enforceability, recordkeeping, and compliance requirements as specified for the concern level actions.

The EPA believes proper and judicious implementation of the intervention level program by States and tribes would provide adequate protection against the recurrence of high, 5-minute SO_2 peaks once such emissions are identified as a problem for particular sources. In EPA's view, States and tribes, being in the best position to assess the impact of 5-minute concentrations in their jurisdiction, would have primary responsibility to execute this section 303 program. However, EPA would retain the authority to take whatever actions the Agency considers appropriate under section 303 to address these situations. For example, if a State or tribe does not take action after the endangerment level has been exceeded, EPA would consult with the State or tribe to discuss the basis for their decision not to act. If EPA then determines that corrective action is warranted to protect public health, EPA itself would take action. Similarly, EPA would consult with the State or tribe and take action in cases where it is evident that frequent exceedances of the concern level constitute an imminent and substantial endangerment to public health, and the State or tribe has failed to take protective action.

B. Compliance and Enforcement Issues

If the State/tribe decides that action is required under the intervention level program to abate the threat to public health, an effective means for ensuring that the source (or sources) has implemented the required course of action is needed. In many cases, compliance would consist of the State or tribe ensuring that the source has implemented the required remedies (e.g., equipment/process modifications, improving maintenance to address emissions contributing to short-term peaks, or a system to alert the public that conditions conducive to high 5-minute peak concentrations are present). However, if there are instances in which emissions can be feasibly measured on a 5-minute basis, or if fuel sampling can be shown to be a feasible compliance indicator, the State or tribe may elect to set an emission limit and use emission measurement or fuel sampling as the method for determining compliance with any control requirements. In such cases, ambient air monitoring over a reasonable period after the implementation of the selected approach would be necessary to verify the effectiveness of the selected corrective actions.

Enforcement of the intervention level program requirements would be based on the requirements of the applicable operating permit, enforceable consent order or agreements, or SIP. Because States and tribes have differing mechanisms for implementing their programs, EPA believes States and tribes are in the best position to determine the most appropriate implementation mechanism for their situations. Nonetheless, EPA believes that any corrective action required of a source by the State/tribe should be effective and practically enforceable—on both the State/tribal and Federal levels. Furthermore, the State/tribe should provide opportunity for public notice and comment on these actions. To this end, SIP revisions, operating permits, court orders, or other implementation mechanisms that provide for Federal enforceability and public participation would be appropriate methods for establishing corrective actions.

V. Relationship Between the Intervention Level Program and Existing Programs

A. Impact on SIP's, Attainment Planning and Implementation

While both the intervention level program and the SIP address health concerns caused by ambient concentrations of SO_2 in a given area, care should be taken to distinguish the two approaches. While the SIP and the intervention level programs are both meant to provide protection from the effects of ambient SO_2 concentrations,

they address different health concerns. The SIP is intended for implementation of the primary and secondary SO_2 NAAQS, established under sections 108 and 109 of the Act to protect public health with an adequate margin of safety and protect the public welfare. The limits for the NAAQS as established are based on an annual arithmetic mean, a maximum 24-hour concentration and a maximum 3-hour concentration. The intervention level program, under the authority of section 303, is designed to address short-term (5-minute) ambient concentrations that present imminent and substantial endangerment to public health or welfare. While these programs complement each other, satisfaction of one program's requirements does not necessarily mean compliance with the other. For example, an area within a State may be in compliance with the requirements of the SIP and still be subject to 5-minute peaks of such magnitude and frequency that action under the intervention level program is warranted. Similarly, in a nonattainment area where progress is being made toward meeting the SIP requirements, the State/tribe may conclude that action under the intervention level program is unnecessary if, for example (1) the area has no 5-minute peaks that exceed the concern level, or (2) the area has infrequent peak episodes that do not render a significant health risk. Furthermore, if any actions are taken by States, tribes, or industry to address 5-minute peaks of SO_2 in a given area, care should be taken to ensure that such actions do not conflict with the existing SIP requirement, or the State or tribal attainment plan.

As an example, after investigating 5-minute SO_2 peak emissions in a given area and discussing various approaches with the source and the affected community, it may be determined that the most cost efficient way of addressing the situation would be to increase the stack height of a particular source. While the impact of increasing the stack height may not be considered in determining whether the emission limitation requirements of the SIP are satisfied, and though the source may already be in compliance with all applicable SIP limits, it is conceivable that the best way to address a given 5-minute concentration problem under the intervention level program could be through the use of dispersion techniques and intermittent controls. The EPA is not suggesting by this example that increasing stack heights is generally an appropriate means for addressing short-term peaks. States, tribes, sources, and affected communities are encouraged to consider other available approaches for minimizing the risk from short-term SO_2 exposures.

In conclusion, implementation of the intervention level program cannot and should not lead to any relaxation of the SIP requirements. However, there will be cases where the implementation of the intervention level program will complement the implementation of the SIP, if reductions in emissions are achieved. In nonattainment areas where 5-minute SO_2 peaks are also prevalent, the State or tribe may wish to coordinate attainment plan development so that the corrective action taken by the source is consistent with the objectives of both the attainment plan and the intervention level program.

B. Malfunctions

The EPA has on occasion used its enforcement discretion in determining how and whether to act on unavoidable violations of source emission limits during periods of startup, shutdown and malfunction (40 CFR 60.11(d)). This policy recognizes that during certain startup and shutdown conditions, effective pollutant control may sometimes not be technically feasible due to process temperatures and pressures that have not yet stabilized. The policy also recognizes that certain source malfunctions are not reasonably foreseeable and are unavoidable, which result in uncontrolled emissions to the atmosphere. However, in some cases these emissions may be causing 5-minute SO_2 peak concentrations that exceed the concern level of 0.60 ppm. The State or tribe must decide when and if action is needed to address such cases. The State or tribe may find that if exceedances associated with malfunctions, start-ups, or shutdowns occur frequently and pose a risk to public health, an appropriate remedial response (including controls, improved maintenance, or other alternative approaches) would be warranted.

C. Significant Harm Level Program

The EPA views the SHL program and the intervention level program as separate programs designed to address different situations that pose a threat to public health. The SHL program establishes corrective actions in advance to address emergency episodes that occur over a period of time (in the case of SO_2, the timeframe would be 24 hours or more). The intervention level program is intended to address peak concentrations which occur over a relatively short timeframe (5 minutes) and, thereby, calls for the appropriate means to address the peaks to be determined after the peak episode occurs.

In most cases, no overlap between the two programs is expected to occur. It is, however, conceivable that an area may be subject to high SO_2 emissions and generate 5-minute and 24-hour ambient concentrations of such magnitude that a State or tribe would have cause to take action under the auspices of both the intervention level and the SHL programs. For example, an area experiencing a 24-hour average SO_2 concentration of 1.0 ppm (the significant harm level) would also experience 5-minute peak concentrations in excess of 0.60 ppm (the concern level for the intervention level program).

Under such circumstances, EPA expects corrective action will be promptly initiated through the SHL program. Once the corrective action required under that program has been established, steps would be taken to determine whether (1) that action effectively prevents 5-minute peak concentration episodes in excess of the intervention levels, or (2) if the 5-minute episodes occur independently of events in which the 24-hour episode levels are exceeded. In the latter case, States and tribes would be expected to take further action under the intervention level program as necessary.

D. Acid Rain Program

Under the acid rain program, sources (primarily coal-fired electric utilities) are given flexibility in how they choose to meet their emissions reductions, including the buying or selling of SO_2 emissions allowances. Regardless of the number of SO_2 allowances a source holds, it may not emit at levels that would violate Federal, State, or tribal emission requirements established under title I of the Act to protect public health, including any emission requirements that would be established to carry out the intent of the intervention level program.

VI. Community Involvement in the Intervention Level Program

As stated earlier, the intervention level program as designed would give States, tribes, local governments, and communities the authority, ability and flexibility to address localized health concerns caused by 5-minute SO_2 episodes more effectively. While State or tribal regulatory agencies and industrial sources would be expected to be primarily responsible for implementing the intervention level program, members of the local community, whose health may be

significantly impacted by peak ambient SO_2 concentrations, have a primary interest in the implementation of this program. The EPA encourages the States, tribes, industry, and local citizens to work together through the intervention level program to identify areas subject to 5-minute peaks, to assess the need for corrective action, and to develop corrective solutions.

When identifying areas that are subject to high ambient peaks, States and tribes may not wish to limit their analysis to ambient air monitoring and risk analysis. The States and tribes may want to consider the number and nature of citizen complaints received as an indicator of a potential public health problem and apply appropriate resources to receiving, reviewing, and addressing the concerns of citizens and community groups. The EPA recommends that citizens who express concern about the health and welfare effects due to high ambient concentration peaks be given the opportunity to present and clarify their concerns to the State or tribe. Citizens, in turn, should be informed of the types and levels of information that would be most helpful in determining links between peaks and health effects and be given every opportunity to gather and provide that information. The EPA can serve as an information resource for States, tribes, and citizens providing the information it has available regarding health effects, risk analysis, ambient air concentrations, monitoring, and other issues, if requested.

After the State or tribe completes its assessment of the health risks in an area caused by 5-minute SO_2 concentrations, it may determine one of three things in an area: (1) measures to protect the public health are needed, (2) measures to protect the public health are not needed, or (3) more information is needed to reasonably determine if protective measures are needed. The EPA encourages States and tribes to keep local citizens and community groups informed during the decision-making process, to explain the factors and information used to supporting the decision, and to provide citizens ample opportunity to comment if they disagree with the decision.

If the State or tribe decides that measures to protect the public health are necessary, EPA recommends that the protective measures be developed through a collaborative process involving the State, tribe, industry, and the local community. As part of the collaborative process, the parties involved should determine: (1) an agreed outcome or goal to be achieved by the protective measures, (2) appropriate actions to be taken by the emission sources to reduce the risk due to 5-minute ambient SO_2 concentrations, (3) a reasonable timetable for completion of the agreed-upon action (or actions), (4) a process to ensure that the action (or actions) agreed upon has been taken, and (5) a reasonable yardstick for assuring that the desired objectives have been achieved.

VII. Source Prioritization and Monitor Allocation

Like the three implementation options originally proposed, a key element of this new proposed implementation strategy is the relocation of existing SO_2 monitors to areas near point sources where peak SO_2 concentrations may exist. Historically, EPA has relied on modeling to predict air pollutant concentrations. However, the use of models is not currently an effective means for predicting 5-minute SO_2 excursions. The reasons for this, discussed in detail in the March 7, 1995 proposal (60 FR 12492), are summarized as follows: (1) model validation studies have not been conducted to determine if existing models can estimate with sufficient accuracy to be used in a regulatory context; (2) it is difficult to obtain accurate source emission data for 5-minute periods, since such data often depend on trying to measure emissions that may occur infrequently and at unpredictable times, concentrations, and flow rates; and (3) a method of determining the expected frequency of emission releases due to malfunctions would have to be employed in order to model these releases.

For these reasons, EPA presented a ''targeted implementation strategy'' in the March 7, 1995 proposal that relied principally on ambient air monitoring instead of modeling to find areas exposed to high, 5-minute concentrations of SO_2. Because the layout of the existing SLAMS network was intended for characterizing urban ambient air quality associated with 3-hour, 24-hour, and annual SO_2 concentrations, the network is not currently designed to measure 5-minute peak SO_2 concentrations from point sources. To allow for the relocation of monitors for measuring 5-minute peak concentrations, EPA proposed revisions to the ambient air quality surveillance requirements (40 CFR part 58) and proposed certain technical changes to the requirements for ambient air monitoring reference and equivalent methods (40 CFR part 53) in the November 15, 1994 (59 FR 58958) and the March 7, 1995 (60 FR 12492) proposals. The March 7, 1995 proposal also presented a strategy States and tribes could use to prioritize potential sources of high, 5-minute SO_2 peaks for monitoring. The strategy presented three groups of sources ranked by their capacity for high emission rates and their potential for high, 5-minute peaks. Available air quality or exposure data and the effects of source location in complex terrain were also considerations in developing the groups.

In ranking sources for monitoring 5-minute peaks, EPA did not expect States and tribes to rely solely on the three categories described in the original proposal. The EPA also recommended that States and tribes evaluate each facility on an individual basis, considering such factors as the type of process, past upsets and malfunctions, the type of fuel used, the complexity of the surrounding terrain, knowledge of how well the source is controlled, the compliance history of the source, proximity to population centers, and the history of citizen complaints. The States and tribes would also need to determine how heavily to weigh a Group A source in an area with low population density versus a Group C source in a more densely-populated area and consider the impact of different source types clustering within a given area. These considerations would form the basis for a State or tribal monitoring plan which would be submitted to EPA during the annual review of the SLAMS network. While EPA would review the monitoring plan developed by States or tribes, it was EPA's intent that States and tribes would retain the main role of decision making since they would have better knowledge of the individual circumstances pertaining to the potential sources to be targeted.

Comments received on the targeted monitoring strategy indicate that some members of the public viewed the proposed strategy as being more rigid than EPA intended. Many commenters felt that the data and assumptions used to develop the ranking categories were outdated and/or conservative. Some felt that their respective industries should not have been given as high a priority as suggested by the categories. Many rejected the concept of prioritizing industrial categories, preferring that the prioritization of sources be based on the additional factors EPA originally proposed—health and exposure data, the size and configuration of sources, compliance history, proximity to population centers, etc.

In response to the comments received, EPA wishes to clarify the criteria discussed in the March 7, 1995 proposal for use by States and tribes to prioritize

the monitoring of sources for high, 5-minute SO_2 peaks. The EPA is not requiring States or tribes to prioritize sources for monitoring in accordance with the three categories of industrial sources discussed in that proposal. The EPA is now recommending that States and tribes evaluate the need to monitor sources based on factors such as the history of citizen complaints, the compliance history of the sources in question, the State or tribe's knowledge of the operational characteristics of a given source (e.g., the likelihood of highly variable emissions, maintenance history), the population in the vicinity of a source (or more specifically, the population of asthmatics and other individuals susceptible to high SO_2 concentrations), and environmental justice concerns. The EPA maintains the proposed revisions to the ambient air quality surveillance requirements (40 CFR part 58) and the proposed technical changes to the requirements for ambient air monitoring reference and equivalent methods (40 CFR part 53), as discussed earlier.

VIII. Reconsideration of Proposed 24-Hour Significant Harm Level and Episodes Criteria

In the March 7, 1995 action (53 FR 14926), EPA also proposed revisions to the 24-hour SHL for SO_2. The EPA is now reconsidering this proposed SHL revision.

The EPA based its previous proposal on a reassessment of the data upon which the original SHL were based and an assessment of more recent scientific evidence on sulfur oxides and particulate matter. The scientific evidence suggested that the combination of SO_2 and high levels of particulate matter can be associated with increases in daily mortality. The final 24-hour PM–10 (particles with an aerodynamic diameter less than or equal to a nominal 10 micrometers) SHL of 600 $\mu g/m^3$ takes this potential interaction into account. This raised the question as to whether the remaining SO_2 SHL is sufficient. The possibility that SO_2 alone or in combination with other pollutants or fog droplets may be in part responsible for the effects associated with 24-hour exposures suggests the need to continue a 24-hour SHL for SO_2, but at a substantially lower concentration. Accordingly, EPA proposed to revise the 24-hour SO_2 SHL from 1.0 (2,620 $\mu g/m^3$) to 0.29 ppm (750 $\mu g/m^3$), as well as revisions to the 24-hour episode levels.

Upon further consideration, EPA now believes that a revised 24-hour SHL is not necessary to protect the public health. Based on a review of existing data, the EPA now believes the additional areas that would require corrective action as a result of changing the SHL (and the episode levels) are generally areas that have not attained the SO_2 NAAQS. The EPA expects that continued efforts of the States and tribes toward submittal, approval, and enactment of State or tribal implementation plans should not only achieve attainment of the NAAQS, but should also address the impact on human health caused by significant 24-hour SO_2 episodes. For this reason, EPA is amending its earlier proposal, recommending that no revision to the 24-hour SHL for SO_2 be made at this time. The EPA solicits comment on this issue.

IX. Comments and the Public Docket

The EPA welcomes comments on all aspects of this proposed rulemaking. Commenters are especially encouraged to give suggestions for improving or clarifying any aspects of the proposal. All comments, with the exception of proprietary information, should be directed to Docket No. A–94–55 (see **ADDRESSES**).

Commenters who wish to submit proprietary information for consideration should clearly separate such information from other comments by: (1) labeling proprietary information ''Confidential Business Information,'' and (2) sending proprietary information directly to the contact person listed (see **FOR FURTHER INFORMATION CONTACT**) and not to the public docket. This will help ensure that proprietary information is not inadvertently placed in the docket. If a commenter wants EPA to use a submission labeled as confidential business information as part of the basis for the final rule, then a nonconfidential version of the document, which summarizes the key data or information, should be sent to the docket. Information covered by a claim of confidentiality will be disclosed by EPA only to the extent allowed and by the procedures set forth in 40 CFR part 2. If no claim of confidentiality accompanies the submission when it is received by EPA, the submission may be made available to the public without notifying the commenters.

IX. Administrative Requirements

A. Executive Order 12866

Under Executive Order 12866, the Agency must determine whether a regulatory action is ''significant'' and, therefore, subject to Office of Management and Budget (OMB) review and the requirements of the Executive Order. The order defines a ''significant regulatory action'' as one that may:

(1) Have an annual effect on the economy of $100 million or more or adversely affect in a material way the economy, a sector of the economy, productivity, competition, jobs, the environment, public health or safety, or State, local, or tribal governments or communities;

(2) create a serious inconsistency or otherwise interfere with an action taken or planned by another Agency;

(3) materially alter the budgetary impact of entitlements, grants, user fees, or loan programs or the rights and obligations or recipients thereof; or

(4) raise novel legal or policy issues arising out of legal mandates, the President's priorities, or the principles set forth in the Executive Order.

While EPA does not believe the intervention level program would potentially have an annual effect on the economy of $100 million or more, the proposed intervention level program was developed in part due to comments received on earlier proposed implementation strategies which were deemed to be significant. Also, to some extent, the characteristics of the intervention level program—local responsibility, flexibility, community involvement—represents a novel regulatory approach. For these reasons, EPA has judged that the proposed intervention level program is a significant regulatory action as defined by Executive Order 12866 and has submitted this action to OMB for review. The EPA has prepared a regulatory impact analysis (RIA) which is summarized below.

In the event that a State or tribe determines that some means of corrective action is necessary under the intervention level program, the actions taken will be specific to the source and the area impacted by high, 5-minute ambient concentrations. As such, the costs can vary widely (from a low-cost alternative, such as fuel switching, to the installation of more costly add-on control equipment). Because of the tremendous uncertainty surrounding the estimation of national costs, the RIA evaluates the cost of control through a series of case studies that present information on a sample of control strategies. The case studies chosen for analysis in the RIA are based upon available data and characteristics of the SO_2 problem (and areas) that provide a broad scope of the issues associated with the implementation of the intervention level program. Of the predicted actions to be taken under this program, two of them correspond with case studies provided in the RIA. It should be noted, however, that the control strategies evaluated for the case

studies were chosen to provide the reader with a wide variety of approaches to resolve a short-term SO_2 problem, and thus, the strategies may not coincide with strategies that may be developed by States and tribes to resolve the problem in their local areas. The list of control strategies analyzed is not exhaustive, as time and resource constraints preclude analysis of all possible control alternatives (including new and innovative ways of addressing SO_2 concentrations that States and local communities may develop while evaluating a 5-minute SO_2 problem). As discussed earlier, States or tribes may choose to have sources address health risks from short-term peaks through alternative approaches such as public health education campaigns or public warning/notice of peak episodes. Such approaches may have lower costs than measures that reduce SO_2 emissions.

Since the current SLAMS network was not developed to identify areas that experience 5-minute peak SO_2 concentrations, it is difficult to predict how many areas of concern might be identified by States and tribes when they relocate monitors for this purpose. A survey of the States yielded 63 source-based monitors that monitored 5-minute concentrations during 1993 and 1994. Of these 63 monitors, 27 (43 percent) registered at least one exceedance of the concern level (0.6 ppm), and 1 (2 percent) registered exceedance of the endangerment level (2.0 ppm). Based on a detailed evaluation of data from these monitors, EPA identified ten areas that the Agency felt would be evaluated for the level of public health risk associated with short-term SO_2 episodes. Of the ten areas, EPA reasonably estimates that action under the intervention level program could be warranted for approximately five areas. The EPA is using several types of information as a basis for projecting the likelihood of action under the intervention level program, including: (1) historical knowledge about the situation based on interactions between the EPA Regions, States and local sources; (2) comments from sources, States, and local agencies on the original proposals which not only discuss local situations, but also the regulatory agency's likely response (because EPA is not only making a provisional judgment about the potential public health risk from these situations, but is also assessing how the regulatory agencies would respond); (3) air quality and census data; and (4) information about the industrial processes at facilities in the locations of concern.

The EPA recognizes that relocation of monitors around sources and in areas of potential concern could identify more areas where assessment of public health risk and possible intervention would be warranted. Since there is significant uncertainty about the extent to which States and tribes will relocate monitors, the total cost of the final program could be higher than the cost EPA has so far identified. The EPA invites public comment on its approach to estimating the costs of this proposal.

The case studies indicate the range of annualized cost for solutions to different 5-minute SO_2 problems to be from approximately $300,000 to $2.2 million. In addition, some case studies have no cost associated with the program since action is not taken. Yet, other studies indicate the potential for either a cost savings of $257,544 or a total annualized cost of $30 million. The range of costs reflects the significant amount of flexibility that regulatory authorities, communities, and sources have under the intervention level program to resolve short-term SO_2 problems at a substantially lower cost than other potential regulatory vehicles. For example, the previously-proposed regulatory option of establishing a new short-term SO_2 NAAQS (0.60 ppm, 5-minute average) was estimated to cost $1.75 billion. Several sources expected to incur costs under the NAAQS option would conceivably have no regulatory action taken upon them under the intervention level program and thus would not incur compliance costs. Even if the five actions predicted so far to occur under the intervention level program have the highest end of costs estimated in the RIA case studies ($2.2 million), the total cost of these five actions would be $11 million—$1.739 billion less than the NAAQS option proposed earlier.

Given that implementation of the intervention level program will only occur in areas where a State or tribe determines there is substantial risk to human health, it is unlikely that a vast number of sources in any one industry will be impacted. It is likely that only one or two sources of an industry will incur additional control costs to resolve a 5-minute SO_2 problem. If the sources affected by the program are not the marginal producers of an industry, the market supply curve is not likely to shift and the source would not benefit from increased prices. Rather, the source would absorb the compliance costs and incorporate them into the cost of production to determine their optimal level of operation.

The quantified benefits of the case studies ranged in value from $2,700 to $44,100. As such, the costs exceed benefits by a significant amount. The small magnitude of benefits results from mainly two factors. First, the short-term peaks in SO_2 under consideration impact a fairly small geographic area within the local vicinity of the model plants. The small geographic area leads to a relatively small number of people being exposed to these short-term peaks. Second, the benefit estimates are limited to the health benefits accruing to asthmatics. The welfare benefits associated with any ecosystem—visibility, odor, materials damage, or particulate matter improvements that may result from control of short-term peaks in SO_2—have not been considered. Although the costs determined for the case studies exceed the quantifiable benefits, the intervention level program achieves a reasonable solution to short-term SO_2 problems at substantially lower cost than other potential regulatory vehicles, such as the previously-proposed, new short-term SO_2 NAAQS. Several of the sources assumed to incur costs under the short-term NAAQS option would conceivably not require regulatory action taken upon them under the proposed intervention level program and would thus incur no compliance costs. In addition, a regulatory authority may consider environmental justice as a criteria to warrant action under the intervention level program. Paragraph E of this section of the preamble discusses the environmental justice analysis prepared for the RIA.

B. Monitoring and Administration Costs

There are 679 sites in the current SLAMS network established to monitor for violations of the SO_2 NAAQS. It was estimated in the previous proposal that approximately two-thirds of the monitors could be relocated in order to monitor for short-term SO_2 concentrations without compromising the current network of monitors for the NAAQS. When final changes to the requirements for ambient air monitoring reference and equivalent methods (40 CFR part 53) and revisions to the ambient air quality surveillance requirements (40 CFR part 58) are promulgated, the States, tribes, and local authorities will be given guidance to place anywhere from 1 to 4 monitors around sources where short-term SO_2 concentrations are of concern. While the total number of monitors to be relocated cannot be determined presently, it is likely that significantly fewer than two-thirds of the current network will be relocated under the intervention level program.

The cost to relocate a monitor is specific to the monitor and site. However, if a stand-alone monitor can be relocated without having to replace operating and maintenance equipment (i.e., the shelter, calibration equipment, data logger, etc.), EPA estimates it would cost $18,630 to relocate the monitor. If a monitor that is relocated requires the installation of new equipment, the total cost of relocation would be $45,050. In addition, there is a cost to operate the monitor estimated at $22,000 per year. If the monitor is currently operating independently, relocating the monitor would merely transfer this expense to the new site. Therefore, there would be no incremental cost to operate the relocated monitor. However, the EPA is aware that some SO_2 monitors are colocated with other monitors (e.g., for ozone, nitrogen oxides, and particulate matter). When relocating the SO_2 monitor in this case, the existing site would maintain the current operating expense for the remaining monitors, and the new site for the relocated SO_2 monitor would incur an incremental operating cost of $22,000. Thus the total cost to relocate a monitor could range from $18,630 for a stand-alone monitor that already has the necessary equipment to relocate to a new site and will not incur any incremental operating costs to $67,050 for a monitor requiring both new equipment and operating expenses.

The EPA recognizes that as monitors are relocated, areas of concern in addition to those estimated may be identified. To the extent more information becomes available, EPA will estimate the anticipated impact of relocating monitors on total program costs in the final rule.

The EPA recognizes that there are costs associated with the administration of the intervention level program. These costs include: determining the need to relocate monitors; evaluating citizen complaints; assessing public health risk; and developing, implementing, and monitoring actions required of the source to reduce risk. The EPA believes that the additional costs resulting from the intervention level program would be minimal for two reasons. First, many States and tribes currently have sufficient administrative infrastructure in place to conduct such activities. Second, the flexibility of the program allows States and tribes to use their resources in the most efficient manner in implementing the program. The EPA invites public comment on the costs associated with administering the intervention level program.

C. Regulatory Flexibility Analysis

The Regulatory Flexibility Act (RFA) requires that all Federal agencies consider the impacts of final regulations on small entities, which are defined to be small businesses, small organizations, and small governmental jurisdictions (5 U.S.C. 601 et seq.). Under 5 U.S.C. 605(b), this requirement may be waived if the Agency certifies that the rule will not have a significant economic effect on a substantial number of small entities. Small entities include small businesses, small not-for-profit enterprises, and governmental entities with jurisdiction over populations of less than 50,000.

A decision to implement the intervention level program under the authority of section 303 would impose no new major requirements. Furthermore, the control measures necessary to implement the intervention level program are developed by the States and tribes. In selecting such measures, the States and tribes have considerable discretion to address the risk presented by 5-minute ambient SO_2 concentrations. Therefore, the impact on small entities from the intervention level program would be determined by how the States and tribes choose to implement the program. For these reasons, any assessment performed by EPA on the costs of implementation at this time would necessarily be speculative. On the basis of the above considerations and findings, and as required by section 605 of the RFA, 5 U.S.C. 601 et seq., the Administrator certifies that this regulation does not have a significant impact on a substantial number of small entities.

D. Impact on Reporting Requirements

While there are reporting requirements associated with related sections of the Act, particularly sections 107, 110, 160, and 317 (42 U.S.C. 7407, 7410, 7460, and 7617), there are no specific Federal reporting requirements associated with the proposed intervention level program. Because the program gives States and tribes discretion to take action as warranted by the risk to the public health, it is difficult to project what recordkeeping and reporting requirements States and tribes may feel are needed to ensure compliance and enforceability in specific cases. Furthermore, any necessary reporting and recordkeeping would be restricted to sources the State/tribe determines as contributing to high 5-minute concentrations in a localized area. No recordkeeping or reporting would be required from sources not contributing to 5-minute peaks or from sources in areas not subject to high 5-minute peaks.

Consequently, EPA is not asking for approval under the Paperwork Reduction Act for any such requirements at this time. The EPA welcomes comments on the nature and burden of recordkeeping and reporting requirements that may be associated with the intervention level program. As the information requirements of the program become clearer, EPA will reevaluate the need for information collection approval under the Paperwork Reduction Act.

E. Unfunded Mandates Reform Act

Title II of the Unfunded Mandates Reform Act of 1995 (UMRA), P.L. 104–4, establishes requirements for Federal agencies to assess the effects of their regulatory actions on State, local, and tribal governments and the private sector. Under sections 202, 203, and 205, respectively, of the UMRA, EPA generally must prepare a written statement, including a cost-benefit analysis, for proposed and final rules with ''Federal mandates'' that may result in expenditures to State, local and tribal governments, in the aggregate or to the private sector, of $100 million or more in any 1 year. Before promulgating an EPA rule for which a written statement is needed, section 205 of the UMRA generally requires EPA to identify and consider a reasonable number of regulatory alternatives and adopt the least costly, most cost-effective or least burdensome alternative that achieves the objectives of the rule. The provisions of section 205 do not apply when they are inconsistent with applicable law. Moreover, section 205 allows EPA to adopt an alternative other than the least costly, most cost-effective or least burdensome alternative if the Administrator publishes with the final rule an explanation why that alternative was not adopted. Before EPA establishes any regulatory requirements that may significantly or uniquely affect small governments, including tribal governments, it must have developed a small government agency plan under section 203 of the UMRA. The plan must provide for notifying potentially-affected, small governments, enabling officials of affected small governments to have meaningful and timely input in the development of EPA regulatory proposals with significant Federal intergovernmental mandates, and informing, educating, and advising small governments on compliance with the regulatory requirements.

The EPA has determined that this proposal does not contain a Federal mandate that may result in expenditures

of $100 million or more for State, local, or tribal governments, in the aggregate or the private sector in any 1 year. The EPA anticipates that the number of cases in which abatement of short-term SO_2 concentrations will be necessary will be few in number and that the States and tribes will work with the sources and the local community to arrive at the most appropriate and efficient control approach to reduce the risk to the public. For these reasons, the expenditures under the intervention level program are not expected to exceed the $100 million threshold. Thus, today's proposal is not subject to the requirements of sections 202 and 205 of the UMRA.

F. Environmental Justice

Executive Order 12898 requires that each Federal agency shall make achieving environmental justice part of its mission by identifying and addressing, as appropriate, disproportionately high and adverse human health or environmental effects of its programs, policies, and activities on minority and low-income populations. The requirements of Executive Order 12898 have been addressed in the draft regulatory impact analysis.

A number of factors indicate that asthma may pose more of a health problem among non-white individuals, children, and urban populations. With these factors in mind, a general screening analysis is conducted to examine the sociodemographic characteristics of the case study areas potentially impacted by short-term SO_2 peaks.

Overall, the population distributions in the case study areas do not indicate that a disproportionate number of non-white individuals would be impacted by short-term SO_2 ambient concentrations greater than 0.60 ppm. The analysis also indicates that there are twice as many children residing in the case study areas as compared to the national average, and potentially 595 of these children could have asthma and thus experience health impacts during peak SO_2 concentrations. In addition to the large number of children potentially exposed to peak SO_2 concentrations, 27 percent of the households in the case study areas are below the poverty level, which is twice the national average. It should be noted, however, that it is not known how many of the households below the poverty level contain asthmatic individuals. Given the available data, there is an indication that a disproportionate number of children and households below the poverty level are exposed to short-term SO_2 peaks.

In general, children do not have sufficient resources to relocate or take action against sources of SO_2 emissions. Similarly, households below the poverty level are generally unlikely to relocate or take action against sources of SO_2 emissions. Not only do these households often lack the resources to relocate, but they may be dependent on the local industrial sources for employment. In such a case, these households may be reluctant to take action against sources of SO_2 emissions if this action would adversely impact employment opportunities.

List of Subjects in 40 CFR Part 51

Environmental protection, Administrative practices and procedure, Air pollution control, Intergovernmental relations, SO_2, Reporting and recordkeeping requirements, State implementation plans.

Dated: December 20, 1996.

Carol M. Browner,

Administrator.

References

EPA (1982a), Air Quality Criteria for Particulate Matter and Sulfur Oxides, Environmental Criteria and Assessment Office, Research Triangle Park, NC, EPA–600/8–82–029a–c.

EPA (1982b), Review of the National Ambient Air Quality Standards for Sulfur Oxides: Assessment of Scientific and Technical Information—OAQPS Staff Paper, Office of Air Quality Planning and Standards, Research Triangle Park, NC, EPA–450/5–82–007.

EPA (1986a), Second Addendum to Air Quality Criteria for Particulate Matter and Sulfur Oxides (1982): Assessment of Newly Available Health Effects Information, Environmental Criteria and Assessment Office, Research Triangle Park, NC, EPA–450/5–86–012.

EPA (1986b), Review of the National Ambient Air Quality Standards for Sulfur Oxides: Updated Assessment of Scientific and Technical Information, Addendum to the 1982 OAQPS Staff Paper, Office of Air Quality Planning and Standards, Research Triangle Park, NC EPA–450/05–86–013.

EPA (1994a), Supplement to the Second Addendum (1986) to Air Quality Criteria for Particulate Matter and Sulfur Oxides (1982): Assessment of New Findings on Sulfur Dioxide Acute Exposure Health Effects in Asthmatic Individuals, Environmental Criteria and Assessment Office, Research Triangle Park, NC, EPA/600/FP–93/002.

EPA (1994b), Review of the Ambient Air Quality Standards for Sulfur Oxides: Updated Assessment of Scientific and Technical Information, Supplement to the 1986 OAQPS Staff Paper Addendum, Office of Air Quality Planning and Standards, Research Triangle Park, NC, EPA/452/R–94–01

Horstman, D. H. Roger, L. J.; Kehrl, H. R.; Hazucha, M. J. (1986). Airway sensitivity of asthmatics to sulfur dioxide. Toxicol. Ind. Health. 2:289–298.

Roger, L. J.; Kehrl, H. R.; Hazucha, M.; Horstman, D. H. (1985). Bronchoconstriction in asthmatics exposed to sulfur dioxide during repeated exercise. J. Appl. Physiol. 59: 784–791.

For the reasons set forth in the preamble, EPA proposes to amend part 51 of Chapter I of title 40 of the Code of Federal Regulations as follows:

PART 51—REQUIREMENTS FOR PREPARATION, ADOPTION, AND SUBMITTAL OF IMPLEMENTATION PLANS

1. The authority citation for part 51 continues to read as follows:

Authority: 42 U.S.C. 7401–7671q.

Subpart H—Prevention of Air Pollution Emergency Episodes

2. Section 51.154 is added to Subpart H to read as follows:

§ 51.154 Intervention levels.

(a) Each plan must contain the authority to take whatever action necessary to prevent further exceedances of the following concern level attributable to emissions from a source or group of sources where one exceedance has occurred, and the State, tribe, or local air pollution control agency determines that the potential for further exceedances of this level constitutes imminent and substantial endangerment to public health or welfare, or the environment:

Sulfur dioxide (SO_2)—0.60 ppm, 5-minute hourly maximum value.

(b) Each plan must contain the authority to take whatever action necessary to prevent further exceedances of the following endangerment level attributable to emissions from a source or group of sources where one exceedance has occurred, and the State, tribe, or local air pollution control agency determines that the potential for further exceedances of this level constitutes imminent and substantial endangerment to public health or welfare, or the environment:

Sulfur dioxide (SO_2)—2.0 ppm, 5-minute hourly maximum value.

(c) Nothing in paragraphs (a) or (b) of this section shall preclude the State, tribe, or local air pollution control agency from addressing any public health threat arising from exceedances of the concern or endangerment levels with measures other than the imposition

of control requirements designed to reduce emissions from specific sources, as long as the measures chosen effectively reduce the threat to public health.

(d) The State, tribe, or local air pollution control agency shall ensure that any action to be taken on the part of the source or group of sources to address any public health threat caused by exceedances of either the concern or endangerment level shall be enforceable by the Administrator and by citizens under the Act.

(e) A 5-minute hourly maximum value for SO_2 is the highest of the 5-minute averages from the 12 possible nonoverlapping periods during a clock hour. An exceedance occurs if the 5-minute hourly maximum is greater than the 5-minute concern or endangerment level after rounding. A value of 0.605 would be rounded to 0.61; a value of 2.05 would be rounded to 2.1. Therefore, the smallest value for an exceedance of the concern level is 0.61 and the smallest value for an exceedance of the endangerment level is 2.1. A 5-minute maximum shall be considered valid if:

(1) The 5-minute averages were available for at least 9 of the 12 5-minute periods during the clock hour; or

(2) The value of any 5-minute average is greater than the concern level.

[FR Doc. 96–32978 Filed 12–31–96; 8:45 am]

BILLING CODE 6560–50–P

federal register

Thursday
January 2, 1997

Part V

Department of Defense

General Services Administration

National Aeronautics and Space Administration

48 CFR Ch. 1, et al.

Federal Acquisition Regulation (FAR); Final Rules

DEPARTMENT OF DEFENSE

GENERAL SERVICES ADMINISTRATION

NATIONAL AERONAUTICS AND SPACE ADMINISTRATION

48 CFR Chapter 1

[Federal Acquisition Circular 90–45]

Federal Acquisition Regulation; Introduction of Miscellaneous Amendments

AGENCIES: Department of Defense (DOD), General Services Administration (GSA), and National Aeronautics and Space Administration (NASA).

ACTION: Summary presentation of final and interim rules.

SUMMARY: This document serves to introduce and relate together the interim and final rule documents which follow and which comprise Federal Acquisition Circular (FAC) 90–45. The Civilian Agency Acquisition Council and the Defense Acquisition Regulations Council have agreed to issue FAC 90–45 to amend the Federal Acquisition Regulation (FAR) to implement changes in the following subject areas:

Item	Subject	FAR case	Analyst
I	Procurement Integrity	96–314	Linfield
II	Certification Requirements	96–312	O'Neill
III	Humanitarian Operations	96–323	Linfield
IV	Freedom of Information Act	96–326	O'Neill
V	Exceptions to Requirements for Certified Cost or Pricing Data	96–306	Olson
VI	Implementation of the North American Free Trade Agreement Implementation Act	93–310	Linfield
VII	Application of Special Simplified Procedures to Certain Commercial Items	96–307	Moss
VIII	Compliance with Immigration and Nationality Act Provisions	96–320	Linfield
IX	Caribbean Basin and Designated Countries	96–017	Linfield
X	Caribbean Basin Country End Products—Renewal of Treatment as Eligible	96–020	Linfield
XI	Compensation of Certain Contractor Personnel (Interim)	96–325	DeStefano
XII	Agency Procurement Protests	95–309	O'Neill
XIII	Two-Phase Design Build Selection Procedures	96–305	O'Neill
XIV	Year 2000 Compliance (Interim)	96–607	O'Neill
XV	Limitation on Indirect Cost Audits	96–324	Olson

DATES: For effective dates and comment dates, see individual documents which appear elsewhere in this separate part.

FOR FURTHER INFORMATION CONTACT: The analyst whose name appears in relation to each FAR case or subject area. For general information, contact the FAR Secretariat, Room 4035, GS Building, Washington, DC, 20405 (202) 501–4755. Please cite FAC 90–45 and FAR case number(s).

SUPPLEMENTARY INFORMATION: Federal Acquisition Circular 90–45 amends the Federal Acquisition Regulation (FAR) as specified below:

Case Summaries

For the actual revisions and/or amendments to these FAR cases, refer to the specific item number and subject set forth in the documents following these item summaries.

Item I—Procurement Integrity (FAR Case 96–314)

This final rule amends the FAR to implement the procurement integrity provisions of Section 27 of the Office of Federal Procurement Policy (OFPP) Act, as amended by Section 4304 of the 1996 National Defense Authorization Act. Section 4304 is part of the Clinger-Cohen Act of 1996. Section 3.104 is rewritten. Unlike the previous statute, some of the post-employment restrictions in the rewritten 3.104 apply to post-award activities. The final rule eliminates all of the procurement integrity certifications required by the previous statute.

The final rule makes other significant changes. The new post-employment restrictions apply to services provided or decisions made on or after January 1, 1997; the old restrictions apply for former officials whose employment ended before January 1, 1997. The clause at 52.203–10 is revised. The clauses at 52.203–9 and 52.203–13, and the Optional Form 333 at 53.202–1, are removed. The solicitation provision at 52.203–8 is replaced with a new clause to provide the means to void or rescind contracts where there has been a violation of the procurement integrity restrictions.

Item II—Certification Requirements (FAR Case 96–312)

This final rule amends FAR Parts 1, 3, 4, 6, 8, 9, 12, 14, 16, 19, 23, 27, 29, 31, 32, 36, 37, 42, 45, 47, 49, 52, and 53 to remove certain certification requirements for contractors and offerors that are not specifically required by statute. The rule implements Section 4301(b) of the Clinger-Cohen Act of 1996 (Public Law 104–106).

Item III—Humanitarian Operations (FAR Case 96–323)

This final rule amends the definition of ''simplified acquisition threshold'' at FAR 2.101 to increase the threshold to $200,000 for contracts to be awarded and performed, or purchases to be made, outside the United States in support of a humanitarian or peacekeeping operation. The rule implements 10 U.S.C. 2302(7) and 41 U.S.C. 259(d) as amended by Section 807 of the National Defense Authorization Act for Fiscal Year 1997 (Public Law 104–201).

Item IV—Freedom of Information Act (FAR Case 96–326)

This final rule amends FAR Subpart 24.2 to implement Section 821 of the National Defense Authorization Act for Fiscal Year 1997 (Public Law 104–201). Section 821 prohibits, with certain exceptions, Government release of competitive proposals under the Freedom of Information Act.

Item V—Exceptions to Requirements for Certified Cost or Pricing Data (FAR Case 96–306)

This final rule implements Section 4201 of the Clinger-Cohen Act of 1996 (Public Law 104–106). Section 4201: (1) Exempts suppliers of commercial items under Federal contracts from the requirement to submit costs or pricing data; (2) provides for the submission of information other than cost or pricing data to the extent necessary to determine price reasonableness; and (3) removes specific audit authorities pertaining to information provided by commercial suppliers. Accordingly, FAR 15.8, 52.215–26, 52.215–41, and 52.215–42 are amended to revise requirements pertaining to the submission of information relating to commercial items; FAR 52.215–43 is removed; and other associated changes are made in FAR Parts 4, 12, 15, 16, 25, 31, 46, and 52.

Item VI—Implementation of the North American Free Trade Agreement Implementation Act (FAR Case 93–310)

The interim rule published as FAC 90–19 and amended by FAC 90–39 is converted to a final rule with changes. The final rule amends FAR Part 25. The final rule revisions result from public comments received on FAR Case 96–312 published as Item II in this FAC. Upon consideration of those public comments, certifications eliminated under the interim rule published in FAC 90–39 were reinstated.

Item VII—Application of Special Simplified Procedures to Certain Commercial Items (FAR Case 96–307)

This final rule amends FAR Parts 5, 6, 11, 12, and 13 to implement section 4202 of the Clinger-Cohen Act of 1996 (Public Law 104–106). Section 4202 requires revisions to the FAR to incorporate special simplified procedures for the acquisition of certain commercial items with a value greater than the simplified acquisition threshold ($100,000) but not greater than $5 million. The purpose of this revision is to vest contracting officers with additional procedural discretion and flexibility, so that commercial item acquisitions in this dollar range may be solicited, offered, evaluated, and awarded in a simplified manner that maximizes efficiency and economy and minimizes burden and administrative costs for both the Government and industry.

Item VIII—Compliance With Immigration and Nationality Act Provisions (FAR Case 96–320)

The interim rule published as Item II of FAC 90–41 is converted to a final rule without change. The final rule amends FAR 9.406 to specify that a contractor may be debarred upon a determination by the Attorney General that the contractor is not in compliance with the employment provisions of the Immigration and Nationality Act. The rule implements Executive Order 12989, Economy and Efficiency in Government Procurement Through Compliance With Certain Immigration and Naturalization Act Provisions.

Item IX—Caribbean Basin and Designated Countries (FAR Case 96–017)

This final rule amends FAR 25.401 to update the lists of countries included in the definitions of ''Caribbean Basin country'' and ''Designated country''.

Item X—Caribbean Basin Country End Products—Renewal of Treatment as Eligible (FAR Case 96–020)

This final rule amends FAR 25.402(b) to implement the extension by the U.S. Trade Representative of the date of eligibility under the Trade Agreements Act for products of Caribbean Basin countries.

Item XI—Compensation of Certain Contractor Personnel (FAR Case 96–325)

This interim rule adds a new requirement at FAR 31.205–6(p) to implement Section 809 of the Fiscal Year (FY) 1997 National Defense Authorization Act (Public Law 104–201). Section 809 places a Governmentwide ceiling of $250,000 per year on allowable compensation costs for contractor personnel in senior management positions under contracts awarded during FY 1997.

Item XII—Agency Procurement Protests (FAR Case 95–309)

The interim rule published as Item XIII of FAC 90–40 is revised and finalized. The rule amends FAR 33.103 to implement Executive Order 12979, Agency Procurement Protests. Executive Order 12979 provides for inexpensive, informal, procedurally simple, and expeditious resolution of agency protests, including the use of alternative dispute resolution techniques, third party neutrals, and another agency's personnel.

Item XIII—Two-Phase Design-Build Selection Procedures (FAR Case 96–305)

This final rule amends FAR Part 36 to implement Section 4105 of the Clinger-Cohen Act of 1996 (Public Law 104–106), which authorizes the use of two-phase design-build procedures for construction contracting. Two phase design-build construction contracting provides for the selection of a limited number of offerors (normally five or fewer), during Phase One of the solicitation process, to submit detailed proposals for Phase Two.

Item XIV—Year 2000 Compliance (FAR Case 96–607)

This interim rule amends FAR Part 39 to increase awareness of Year 2000 procurement issues and to ensure that solicitations and contracts address Year 2000 issues.

Item XV—Limitation on Indirect Cost Audits (FAR Case 96–324)

This final rule amends FAR Part 42 to implement Section 808 of the FY 97 National Defense Authorization Act (Public Law 104–201). Section 808 amends 10 U.S.C. 2313(d) and 41 U.S.C. 254d(d) to expand required audit reciprocity among Federal agencies to include post-award audits. 10 U.S.C. 2313(d) and 41 U.S.C. 254d(d) were added by the Federal Acquisition Streamlining Act of 1994, Sections 2201(a)(1) and 2251(a) of Public Law 103–355, to include reciprocity on pre-award audits.

Dated: December 24, 1996.

Edward C. Loeb,

Director, Federal Acquisition Policy Division.

Federal Acquisition Circular

Federal Acquisition Circular (FAC) 90–45 is issued under the authority of the Secretary of Defense, the Administrator of General Services, and the Administrator for the National Aeronautics and Space Administration.

Unless otherwise specified, all Federal Acquisition Regulation (FAR) and other directive material contained in FAC 90–45 is effective January 1, 1997, except for Item XII, which is effective March 3, 1997.

Dated: December 24, 1996.

Charles A. Zuckerman,

Director, Defense Procurement (Acting).

Dated: December 23, 1996.

Ida M. Ustad,

Deputy Associate Administrator, Office of Acquisition Policy, General Services Administration.

Dated: December 23, 1996.

L.W. Bailets,

Associate Administrator for Procurement (Acting), National Aeronautics and Space Administration.

[FR Doc. 96–33198 Filed 12–31–96; 8:45 am]

BILLING CODE 6820–EP–P

48 CFR Parts 1, 3, 4, 9, 12, 14, 15, 19, 33, 37, 43, 52, and 53

[FAC 90–45; FAR Case 96–314; Item I]

RIN 9000–AH19

Federal Acquisition Regulation; Procurement Integrity

AGENCIES: Department of Defense (DOD), General Services Administration (GSA), and National Aeronautics and Space Administration (NASA).

ACTION: Final rule.

SUMMARY: The Civilian Agency Acquisition Council and the Defense Acquisition Regulations Council have agreed on a final rule to amend the Federal Acquisition Regulation (FAR) to implement Section 27 of the Office of Federal Procurement Policy (OFPP) Act (41 U.S.C. 423), as amended by Section 4304 of the Clinger-Cohen Act, part of the FY 96 National Defense Authorization Act. This regulatory action was not subject to Office of Management and Budget review under Executive Order 12866, dated September 30, 1993, and is not a major rule under 5 U.S.C. 804.

EFFECTIVE DATE: January 1, 1997.

FOR FURTHER INFORMATION CONTACT: Mr. Paul Linfield at (202) 501–1757 in reference to this FAR case. For general information, contact the FAR Secretariat, Room 4035, GS Building, Washington, DC 20405 (202) 501–4755. Please cite FAC 90–45, FAR case 96–314. E-mail correspondence submitted over the Internet should be addressed to: 96–314@V.GSA.GOV.

SUPPLEMENTARY INFORMATION:

A. Background

This final rule amends the FAR to implement the procurement integrity requirements in 41 U.S.C. 423 as amended by Section 4304 of the Clinger-Cohen Act of 1996 (Public Law 104–106). A proposed rule with request for public comments was published on September 6, 1996 (61 FR 47390). Sixty-nine comments were received from 10 respondents. These comments include three respondents' comments that were received after November 5, 1996, but which also were considered in drafting this final rule.

Section 4304 imposes restrictions on both the obtaining and disclosing of certain information obtained during the conduct of a procurement, except as provided by law. It requires certain agency officials involved in a procurement to take definite actions when contacting or contacted by offerors regarding non-Federal employment. Also, it prohibits a former official's acceptance of compensation from a contractor if the former official either served in an identified position or made certain contract decisions involving more than $10 million to that contractor. Unlike the previous statutory requirements, some of the post-employment restrictions apply to post-award activities.

The final rule eliminates all procurement integrity certifications previously required by the statute and revises the proposed rule published on September 6, 1996, in several significant ways. Subsection 3.104–2 was clarified to state that the post-Federal employment restrictions of the amended statute are applicable only to Federal service provided or decisions made after January 1, 1997. The text was reorganized and two new subsections added. In the redesignated 3.104–3, the terms ''compensation'', ''contract'', ''decision to award a subcontract or modification of subcontract'', ''in excess of $10,000,000'', and ''source selection evaluation board'' were defined.

The final rule amplifies on the proposed rule in several areas addressed in the public comments received. For example, bid or proposal information marked in accordance with FAR 52.215–12 is contractor bid or proposal information that requires protection (see definition in 3.104–3 and 3.104–5). In 3.104–6, the final rule adds that contacts through an agent or other intermediary of an agency official or of a bidder or offeror may be considered a ''contact'' and require the agency official to disqualify himself or herself from the procurement. In the new 3.104–10, we added that the agency may take appropriate administrative action when an agency official's contact with a bidder or offeror regarding post-Federal employment interferes with the official's ability to perform assigned duties, and made specific reference to the criminal and civil penalties which may result from violations of the prohibitions and requirements of the Act.

B. Regulatory Flexibility Act

A Final Regulatory Flexibility Analysis (FRFA) has been performed. A copy of the FRFA may be obtained from the FAR Secretariat, Room 4035, GS Building, Washington, DC 20405 (202) 501–4755. The analysis is summarized as follows:

The objective of this rule is to advise present and certain former agency officials, bidders, offerors, and others involved in Federal agency procurements and contracts, of the revised requirements of 41 U.S.C. 423. Section 4304 of the Clinger-Cohen Act of 1996 (Public Law 104–106) (1) restricts the disclosing and obtaining of procurement information during the conduct of a Federal agency procurement, (2) identifies actions procurement officers must take when contacted by a bidder or offeror regarding non-Federal employment, and (3) prohibits a former official's acceptance of compensation from a contractor if the former official either served in an identified position or made certain contact decisions involving more than $10 million to that contractor.

No comments were received in response to the Initial Regulatory Flexibility Analysis. The final rule's restrictions on disclosing or obtaining procurement information apply to all competitive Government procurements. The restrictions on employment discussions between Federal agency officials and bidders or offerors in Federal agency procurements apply to all competitive Government procurements above the simplified acquisition threshold. We estimate that there are approximately 40,000 small businesses per year that submit bids or proposals for contracts exceeding the simplified acquisition threshold.

The rule's prohibition on former Federal agency officials' acceptance of compensation from certain contractors applies to any contractor which is awarded a contract in excess of $10 million, or which is affected by certain decisions made by a Federal agency official on matters in excess of $10 million. We estimate that this provision of the rule will apply to approximately 60 small businesses per year.

The interim rule imposes no new information collection or recordkeeping requirements. The rule eliminates existing information collection and recordkeeping requirements that implemented 41 U.S.C. 423 prior to its amendment by Section 4304. The existing requirements that this rule eliminates applied to (1) large and small entities that are bidders or offerors in Federal agency procurements with a value of $100,000 or more, (2) contractors negotiating contract modifications with a value of $100,000 or more, and (3) contractors that wish to employ former Federal procurement officials.

There are no known alternatives which would further reduce the impact on small entities and accomplish the objectives of 41 U.S.C. 423, as amended by Section 4304 of Public Law 104–106.

C. Paperwork Reduction Act

The Paperwork Reduction Act (Public Law 96–511) is deemed to apply

because the final rule eliminates existing recordkeeping and information collection requirements approved by the Office of Management and Budget under OMB Number 9000–0103. A paperwork burden of 43,333 hours is eliminated.

List of Subjects in 48 CFR Parts 1, 3, 4, 9, 12, 14, 15, 19, 33, 37, 43, 52, and 53

Government procurement.

Dated: December 24, 1996.

Edward C. Loeb,

Director, Federal Acquisition Policy Division.

Therefore, 48 CFR Parts 1, 3, 4, 9, 12, 14, 15, 19, 33, 37, 43, 52, and 53 are amended as set forth below:

1. The authority citation for 48 CFR Parts 1, 3, 4, 9, 12, 14, 15, 19, 33, 37, 43, 52, and 53 continues to read as follows:

Authority: 40 U.S.C. 486(c); 10 U.S.C. chapter 137; and 42 U.S.C. 2473(c).

PART 1—FEDERAL ACQUISITION REGULATIONS SYSTEM

1.106 [Amended]

2. The table in section 1.106 is amended under the ''FAR Segment'' and ''OMB Control Number'' columns by removing the entries for ''3.104–9'', ''3.104–12(a)(12)'', ''52.203–8'', and ''52.203–9''.

PART 3—IMPROPER BUSINESS PRACTICES AND PERSONAL CONFLICTS OF INTEREST

3. Sections 3.104 through 3.104–11 are revised and 3.104–12 is removed, to read as follows:

3.104 Procurement integrity.

3.104–1 General.

(a) This FAR section 3.104 implements section 27 of the Office of Federal Procurement Policy Act (41 U.S.C. 423), as amended by section 814 of the Fiscal Year 1990/1991 National Defense Authorization Act, Public Law 101–189, section 815 of the Fiscal Year 1991 National Defense Authorization Act, Public Law 101–510, and section 4304 of the Fiscal Year 1996 National Defense Authorization Act, Public Law 104–106 (hereinafter, the Office of Federal Procurement Policy Act, as amended, is referred to as ''the Act''). Agencies may supplement 3.104 and any clauses required by 3.104, and may use agency specific definitions to identify individuals who occupy positions specified in 3.104–4(d)(1)(ii). Such supplementation and definitions must be approved at a level not lower than the senior procurement executive of the agency, unless a higher level of approval is required by law for that agency.

(b) Agency employees are reminded that there are other statutes and regulations that deal with the same or related prohibited conduct, for example—

(1) The offer or acceptance of a bribe or gratuity is prohibited by 18 U.S.C. 201, 10 U.S.C. 2207, 5 U.S.C. 7353, and 5 CFR part 2635;

(2) Section 208 of Title 18, United States Code, and 5 CFR part 2635 preclude a Government employee from participating personally and substantially in any particular matter that would affect the financial interests of any person from whom the employee is seeking employment;

(3) Post-employment restrictions are covered by 18 U.S.C. 207 and 5 CFR parts 2637 and 2641, which prohibit certain activities by former Government employees, including representation of a contractor before the Government in relation to any contract or other particular matter involving specific parties on which the former employee participated personally and substantially while employed by the Government;

(4) Parts 14 and 15 place restrictions on the release of information related to procurements and other contractor information which must be protected under 18 U.S.C. 1905;

(5) Other laws such as the Privacy Act (5 U.S.C. 552a) and the Trade Secrets Act (18 U.S.C. 1905) may preclude release of information both before and after award (see 3.104–5); and

(6) Use of nonpublic information to further an employee's private interest or that of another and engaging in a financial transaction using nonpublic information are covered by 5 CFR 2635.703.

3.104–2 Applicability.

(a) The restrictions at 3.104–4 (a) and (b) apply beginning January 1, 1997, to the conduct of every Federal agency procurement using competitive procedures for the acquisition of supplies or services from non-Federal sources using appropriated funds.

(b) The requirements of 3.104–4(c) apply beginning January 1, 1997, in connection with every Federal agency procurement using competitive procedures, for a contract expected to exceed the simplified acquisition threshold. Such requirements do not apply after the contract has been awarded or the procurement has been canceled.

(c) The post-employment restrictions at 3.104–4(d) apply to any former official of a Federal agency, for services provided or decisions made on or after January 1, 1997.

(d) Former officials of a Federal agency whose employment by a Federal agency ended before January 1, 1997, are subject to the restrictions imposed by 41 U.S.C. 423 as it existed before Public Law 104–106. Solely for the purpose of continuing those restrictions on those officials to the extent they were imposed prior to January 1, 1997, the provisions of 41 U.S.C. 423 as it existed before Public Law 104–106 apply through December 31, 1998.

3.104–3 Definitions.

As used in this section—

Agency ethics official means the designated agency ethics official described in 5 CFR 2638.201 and any other designated person, including—

(1) Deputy ethics officials described in 5 CFR 2638.204, to whom authority under 3.104–7 has been delegated by the designated agency ethics official; and

(2) Alternate designated agency ethics officials described in 5 CFR 2638.202(b).

Compensation means wages, salaries, honoraria, commissions, professional fees, and any other form of compensation, provided directly or indirectly for services rendered. Compensation is indirectly provided if it is paid to an entity other than the individual, specifically in exchange for services provided by the individual.

Contract, for purposes of the post-employment restrictions at 3.104–4(d), includes both competitively awarded and non-competitively awarded contracts.

Contractor bid or proposal information means any of the following information submitted to a Federal agency as part of or in connection with a bid or proposal to enter into a Federal agency procurement contract, if that information has not been previously made available to the public or disclosed publicly:

(1) Cost or pricing data (as defined by 10 U.S.C. 2306a(h) with respect to procurements subject to that section, and section 304A(h) of the Federal Property and Administrative Services Act of 1949 (41 U.S.C. 254b(h)), with respect to procurements subject to that section).

(2) Indirect costs and direct labor rates.

(3) Proprietary information about manufacturing processes, operations, or techniques marked by the contractor in accordance with applicable law or regulation.

(4) Information marked by the contractor as ''contractor bid or proposal information'' in accordance with applicable law or regulation.

(5) Information marked in accordance with 52.215–12.

Decision to award a subcontract or modification of subcontract means a decision to designate award to a particular source.

Federal agency has the meaning provided such term in section 3 of the Federal Property and Administrative Services Act of 1949 (40 U.S.C. 472).

Federal agency procurement means the acquisition (by using competitive procedures and awarding a contract) of goods or services (including construction) from non-Federal sources by a Federal agency using appropriated funds. For broad agency announcements and small business innovative research programs, each proposal received by an agency shall constitute a separate procurement for purposes of the Act.

In excess of $10,000,000 means—

(1) The value, or estimated value, at the time of award, of the contract, including all options;

(2) The total estimated value at the time of award of all orders under an indefinite-delivery, indefinite-quantity, or requirements contract;

(3) Any multiple award schedule contract unless the contracting officer documents a lower estimate.

(4) The value of a delivery order, task order, or an order under a Basic Ordering Agreement;

(5) The amount paid or to be paid in settlement of a claim; or

(6) The estimated monetary value of negotiated overhead or other rates when applied to the Government portion of the applicable allocation base.

Official means:

(1) An officer, as defined in 5 U.S.C. 2104.

(2) An employee, as defined in 5 U.S.C. 2105.

(3) A member of the uniformed services, as defined in 5 U.S.C. 2101(3).

(4) A special Government employee, as defined in 18 U.S.C. 202.

Participating personally and substantially in a Federal agency procurement is defined as follows:

(1) *Participating personally and substantially in a Federal agency procurement* means active and significant involvement of the individual in any of the following activities directly related to that procurement:

(i) Drafting, reviewing, or approving the specification or statement of work for the procurement.

(ii) Preparing or developing the solicitation.

(iii) Evaluating bids or proposals, or selecting a source.

(iv) Negotiating price or terms and conditions of the contract.

(v) Reviewing and approving the award of the contract.

(2) *Participating ''personally''* means participating directly, and includes the direct and active supervision of a subordinate's participation in the matter.

(3) *Participating ''substantially''* means that the employee's involvement is of significance to the matter. Substantial participation requires more than official responsibility, knowledge, perfunctory involvement, or involvement on an administrative or peripheral issue. Participation may be substantial even though it is not determinative of the outcome of a particular matter. A finding of substantiality should be based not only on the effort devoted to a matter, but on the importance of the effort. While a series of peripheral involvements may be insubstantial, the single act of approving or participating in a critical step may be substantial. However, the review of procurement documents solely to determine compliance with regulatory, administrative, or budgetary procedures, does not constitute substantial participation in a procurement.

(4) Generally, an individual will not be considered to have participated personally and substantially in a procurement solely by participating in the following activities:

(i) Agency level boards, panels, or other advisory committees that review program milestones or evaluate and make recommendations regarding alternative technologies or approaches for satisfying broad agency level missions or objectives;

(ii) The performance of general, technical, engineering, or scientific effort having broad application not directly associated with a particular procurement, notwithstanding that such general, technical, engineering, or scientific effort subsequently may be incorporated into a particular procurement;

(iii) Clerical functions supporting the conduct of a particular procurement; and

(iv) For procurements to be conducted under the procedures of OMB Circular A–76, participation in management studies, preparation of in-house cost estimates, preparation of ''most efficient organization'' analyses, and furnishing of data or technical support to be used by others in the development of performance standards, statements of work, or specifications.

Source selection evaluation board means any board, team, council, or other group that evaluates bids or proposals.

Source selection information means any of the following information which is prepared for use by a Federal agency for the purpose of evaluating a bid or proposal to enter into a Federal agency procurement contract, if that information has not been previously made available to the public or disclosed publicly:

(1) Bid prices submitted in response to a Federal agency invitation for bids, or lists of those bid prices before bid opening.

(2) Proposed costs or prices submitted in response to a Federal agency solicitation, or lists of those proposed costs or prices.

(3) Source selection plans.

(4) Technical evaluation plans.

(5) Technical evaluations of proposals.

(6) Cost or price evaluations of proposals.

(7) Competitive range determinations that identify proposals that have a reasonable chance of being selected for award of a contract.

(8) Rankings of bids, proposals, or competitors.

(9) Reports and evaluations of source selection panels, boards, or advisory councils.

(10) Other information marked as ''SOURCE SELECTION INFORMATION—SEE FAR 3.104'' based on a case-by-case determination by the head of the agency or designee, or the contracting officer, that its disclosure would jeopardize the integrity or successful completion of the Federal agency procurement to which the information relates.

3.104–4 Statutory and related prohibitions, restrictions, and requirements.

(a) *Prohibition on disclosing procurement information (subsection 27(a) of the Act).* (1) A person described in paragraph (a)(2) of this subsection shall not, other than as provided by law, knowingly disclose contractor bid or proposal information or source selection information before the award of a Federal agency procurement contract to which the information relates. (See 3.104–5(a).)

(2) Paragraph (a)(1) of this subsection applies to any person who—

(i) Is a present or former official of the United States, or a person who is acting or has acted for or on behalf of, or who is advising or has advised the United States with respect to, a Federal agency procurement; and

(ii) By virtue of that office, employment, or relationship, has or had access to contractor bid or proposal information or source selection information.

(b) *Prohibition on obtaining procurement information (subsection*

27(b) of the Act). A person shall not, other than as provided by law, knowingly obtain contractor bid or proposal information or source selection information before the award of a Federal agency procurement contract to which the information relates.

(c) *Actions required of agency officials when contacted by offerors regarding non-Federal employment (subsection 27(c) of the Act).* If an agency official who is participating personally and substantially in a Federal agency procurement for a contract in excess of the simplified acquisition threshold contacts or is contacted by a person who is a bidder or offeror in that Federal agency procurement regarding possible non-Federal employment for that official, the official shall—

(1) Promptly report the contact in writing to the official's supervisor and to the designated agency ethics official (or designee) of the agency in which the official is employed; and

(2)(i) Reject the possibility of non-Federal employment; or

(ii) Disqualify himself or herself from further personal and substantial participation in that Federal agency procurement (see 3.104–6) until such time as the agency has authorized the official to resume participation in such procurement, in accordance with the requirements of 18 U.S.C. 208 and applicable agency regulations, on the grounds that—

(A) The person is no longer a bidder or offeror in that Federal agency procurement; or

(B) All discussions with the bidder or offeror regarding possible non-Federal employment have terminated without an agreement or arrangement for employment.

(d) *Prohibition on former official's acceptance of compensation from a contractor (subsection 27(d) of the Act).*

(1) A former official of a Federal agency may not accept compensation from a contractor as an employee, officer, director, or consultant of the contractor within a period of one year after such former official—

(i) Served, at the time of selection of the contractor or the award of a contract to that contractor, as the procuring contracting officer, the source selection authority, a member of a source selection evaluation board, or the chief of a financial or technical evaluation team in a procurement in which that contractor was selected for award of a contract in excess of $10,000,000;

(ii) Served as the program manager, deputy program manager, or administrative contracting officer for a contract in excess of $10,000,000 awarded to that contractor; or

(iii) Personally made for the Federal agency—

(A) A decision to award a contract, subcontract, modification of a contract or subcontract, or a task order or delivery order in excess of $10,000,000 to that contractor;

(B) A decision to establish overhead or other rates applicable to a contract or contracts for that contractor that are valued in excess of $10,000,000;

(C) A decision to approve issuance of a contract payment or payments in excess of $10,000,000 to that contractor; or

(D) A decision to pay or settle a claim in excess of $10,000,000 with that contractor.

(2) Nothing in paragraph (d)(1) of this subsection may be construed to prohibit a former official of a Federal agency from accepting compensation from any division or affiliate of a contractor that does not produce the same or similar products or services as the entity of the contractor that is responsible for the contract referred to in paragraph (d)(1) of this subsection.

3.104–5 Disclosure, protection, and marking of contractor bid or proposal information and source selection information.

(a) Except as specifically provided for in this subsection, no person or other entity may disclose contractor bid or proposal information or source selection information to any person other than a person authorized, in accordance with applicable agency regulations or procedures, by the head of the agency or designee, or the contracting officer, to receive such information.

(b) Contractor bid or proposal information and source selection information shall be protected from unauthorized disclosure in accordance with 14.401, 15.411, 15.413, applicable law, and agency regulations.

(c) In determining whether particular information is source selection information, see the definition in 3.104–3 and consult with agency officials as necessary. Individuals responsible for preparing material that may be source selection information under paragraph (10) of the definition shall mark the cover page and each page that the individual believes contains source selection information with the legend ''SOURCE SELECTION INFORMATION—SEE FAR 3.104.'' Although the information in paragraphs (1) through (9) of the definition in 3.104–3 is considered to be source selection information whether or not marked, all reasonable efforts shall be made to mark such material with the same legend.

(d) Except as provided in subparagraph (d)(4) of this subsection, if the contracting officer believes that information marked as proprietary is not proprietary, information otherwise marked as contractor bid or proposal information is not contractor bid or proposal information, or information marked in accordance with 52.215–12 is inappropriately marked, the contractor that has affixed the marking shall be notified in writing and given an opportunity to justify the marking.

(1) If the contractor agrees that the marking is not justified, or does not respond within the time specified in the notice, the contracting officer may remove the marking and the information may be released.

(2) If, after reviewing any justification submitted by the contractor, the contracting officer determines that the marking is not justified, the contracting officer shall notify the contractor in writing.

(3) Information marked by the contractor as proprietary, otherwise marked as contractor bid or proposal information, or marked in accordance with 52.215–12, shall not be released until—

(i) The review of the contractor's justification has been completed; or

(ii) The period specified for the contractor's response has elapsed, whichever is earlier. Thereafter, the contracting officer may release the information.

(4) With respect to technical data that are marked proprietary by a contractor, the contracting officer shall generally follow the procedures in 27.404(h).

(e) Nothing in this section restricts or prohibits—

(1) A contractor from disclosing its own bid or proposal information or the recipient from receiving that information;

(2) The disclosure or receipt of information, not otherwise protected, relating to a Federal agency procurement after it has been canceled by the Federal agency, before contract award, unless the Federal agency plans to resume the procurement;

(3) Individual meetings between a Federal agency official and an offeror or potential offeror for, or a recipient of, a contract or subcontract under a Federal agency procurement, provided that unauthorized disclosure or receipt of contractor bid or proposal information or source selection information does not occur; or

(4) The Government's use of technical data in a manner consistent with the Government's rights in the data.

(f) Nothing in this section shall be construed to authorize—

(1) The withholding of any information pursuant to a proper request from the Congress, any committee or subcommittee thereof, a Federal agency, the Comptroller General, or an Inspector General of a Federal agency, except as otherwise authorized by law or regulation. Any such release which contains contractor bid or proposal information or source selection information shall clearly notify the recipient that the information or portions thereof are contractor bid or proposal information or source selection information related to the conduct of a Federal agency procurement, the disclosure of which is restricted by section 27 of the Act;

(2) The withholding of information from, or restricting its receipt by, the Comptroller General of the United States in the course of a protest against the award or proposed award of a Federal agency procurement contract;

(3) The release of information after award of a contract or cancellation of a procurement if such information is contractor bid or proposal information or source selection information which pertains to another procurement; or

(4) The disclosure, solicitation, or receipt of bid or proposal information or source selection information after award where such disclosure, solicitation, or receipt is prohibited by law. See 3.104–1(b)(5) and subpart 24.2.

3.104–6 Disqualification.

(a) *Contacts through agents.* Disqualification pursuant to 3.104–4(c)(2) may be required even where contacts are through an agent or other intermediary of the agency official or an agent or other intermediary of a bidder or offeror. See 18 U.S.C. 208 and 5 CFR 2635.603(c).

(b) *Disqualification notice.* In addition to submitting the contact report required by 3.104–4(c)(1), an agency official who must disqualify himself or herself pursuant to 3.104–4(c)(2)(ii) shall promptly submit to the head of the contracting activity (HCA), or designee, a written notice of disqualification from further participation in the procurement. Concurrent copies of the notice shall be submitted to the contracting officer, the source selection authority if the contracting officer is not the source selection authority, and the agency official's immediate supervisor. As a minimum, the notice shall—

(1) Identify the procurement;

(2) Describe the nature of the agency official's participation in the procurement and specify the approximate dates or time period of participation; and

(3) Identify the bidder or offeror and describe its interest in the procurement.

(c) *Resumption of participation in a procurement.* (1) The individual shall remain disqualified until such time as the agency has authorized the official to resume participation in the procurement in accordance with 3.104–4(c)(2)(ii).

(2) Subsequent to a period of disqualification, if an agency wishes to reinstate the agency official to participation in the procurement, the HCA or designee may authorize immediate reinstatement or may authorize reinstatement following whatever additional period of disqualification the HCA determines is necessary to ensure the integrity of the procurement process. In determining that any additional period of disqualification is necessary, the HCA or designee shall consider any factors that might give rise to an appearance that the agency official acted without complete impartiality with respect to issues involved in the procurement. The HCA or designee shall consult with the agency ethics official in making a determination to reinstate an official. Decisions to reinstate an employee should be in writing. It is within the discretion of the HCA, or designee, to determine that the agency official shall not be reinstated to participation in the procurement.

(3) An employee must comply with the provisions of 18 U.S.C. 208 and 5 CFR part 2635 regarding any resumed participation in a procurement matter. An employee may not be reinstated to participate in a procurement matter affecting the financial interest of someone with whom he or she is seeking employment, unless he or she receives a waiver pursuant to 18 U.S.C. 208(b)(1) or (b)(3) or an authorization in accordance with the requirements of 5 CFR part 2635, as appropriate.

3.104–7 Ethics advisory opinions regarding prohibitions on a former official's acceptance of compensation from a contractor.

(a) An official or former official of a Federal agency who does not know whether he or she is or would be precluded by subsection 27(d) of the Act (see 3.104–4(d)) from accepting compensation from a particular contractor may request advice from the appropriate agency ethics official prior to accepting such compensation.

(b) The request for an advisory opinion shall be submitted in writing, shall be dated and signed, and shall include all information reasonably available to the official or former official that is relevant to the inquiry. As a minimum, the request shall include—

(1) Information about the procurement(s), or decision(s) on matters under 3.104–4(d)(1)(iii), involving the particular contractor, in which the individual was or is involved, including contract or solicitation numbers, dates of solicitation or award, a description of the supplies or services procured or to be procured, and contract amount;

(2) Information about the individual's participation in the procurement or decision, including the dates or time periods of that participation, and the nature of the individual's duties, responsibilities, or actions; and

(3) Information about the contractor, including a description of the products or services produced by the division or affiliate of the contractor from whom the individual proposes to accept compensation.

(c) Within 30 days after the date a request containing complete information is received, or as soon thereafter as practicable, the agency ethics official shall issue an opinion as to whether the proposed conduct is proper or would violate subsection 27(d) of the Act.

(d)(1) Where complete information is not included in the request, the agency ethics official may ask the requester to provide any information reasonably available to the requester. Additional information may also be requested from other persons, including the source selection authority, the contracting officer, or the requester's immediate supervisor.

(2) In issuing an opinion, the agency ethics official may rely upon the accuracy of information furnished by the requester or other agency sources, unless he or she has reason to believe that the information is fraudulent, misleading, or otherwise incorrect.

(3) If the requester is advised in a written opinion by the agency ethics official that the requester may accept compensation from a particular contractor, and accepts such compensation in good faith reliance on that advisory opinion, then neither the requester nor the contractor shall be found to have knowingly violated subsection 27(d) of the Act. If the requester or the contractor has actual knowledge or reason to believe that the opinion is based upon fraudulent, misleading, or otherwise incorrect information, their reliance upon the opinion will not be deemed to be in good faith.

3.104–8 Calculating the period of compensation prohibition.

The one-year prohibition on accepting compensation (see 3.104–4(d)(1)) begins to run as provided in this subsection:

(a) If the former official was serving in one of the positions specified in 3.104–4(d)(1)(i) on the date of the selection of the contractor, but not on the date of the award of the contract, the prohibition begins on the date of the selection of the contractor.

(b) If the former official was serving in one of the positions specified in 3.104–4(d)(1)(i) on the date of the award of the contract (whether or not they were serving on the date of the selection of the contractor), the prohibition begins on the date of the award of the contract.

(c) If the former official was serving in one of the positions specified in 3.104–4(d)(1)(ii), the prohibition begins on the last date the individual served in that position.

(d) If the former official personally made one of the decisions specified in 3.104–4(d)(1)(iii), the prohibition begins on the date the decision was made.

3.104–9 Contract clauses.

(a) The contracting officer shall insert the clause at 52.203–8, Cancellation, Rescission, and Recovery of Funds for Illegal or Improper Activity, in solicitations and contracts with a value exceeding the simplified acquisition threshold.

(b) The contracting officer shall insert the clause at 52.203–10, Price or Fee Adjustment for Illegal or Improper Activity, in solicitations and contracts with a value exceeding the simplified acquisition threshold.

3.104–10 Violations or possible violations.

(a) If the contracting officer receives or obtains information of a violation or possible violation of subsections 27 (a), (b), (c), or (d) of the Act (see 3.104–4), the contracting officer shall determine whether the reported violation or possible violation has any impact on the pending award or selection of the source therefor.

(1) If the contracting officer concludes that there is no impact on the procurement, the contracting officer shall forward the information concerning the violation or possible violation, accompanied by appropriate documentation supporting that conclusion, to an individual designated in accordance with agency procedures. With the concurrence of that individual, the contracting officer shall, without further approval, proceed with the procurement.

(2) If the individual reviewing the contracting officer's conclusion does not agree with that conclusion, the individual shall advise the contracting officer to withhold award and shall promptly forward the information and documentation to the HCA or designee.

(3) If the contracting officer concludes that the violation or possible violation impacts the procurement, the contracting officer shall promptly forward the information to the HCA or designee.

(b) The HCA or designee receiving any information describing an actual or possible violation of subsections 27 (a), (b), (c), or (d) of the Act, shall review all information available and take appropriate action in accordance with agency procedures, such as—

(1) Advising the contracting officer to continue with the procurement;

(2) Causing an investigation to be conducted;

(3) Referring the information disclosed to appropriate criminal investigative agencies;

(4) Concluding that a violation occurred; or

(5) Recommending an agency head determination that the contractor, or someone acting for the contractor, has engaged in conduct constituting an offense punishable under subsection 27(e) of the Act, for the purpose of voiding or rescinding the contract.

(c) Before concluding that a bidder, offeror, contractor, or person has violated the Act, the HCA or designee may request information from appropriate parties regarding the violation or possible violation when considered in the best interests of the Government.

(d) If the HCA or designee concludes that the prohibitions of section 27 of the Act have been violated, then the HCA or designee may direct the contracting officer to—

(1) If a contract has not been awarded—

(i) Cancel the procurement;

(ii) Disqualify an offeror; or

(iii) Take any other appropriate actions in the interests of the Government.

(2) If a contract has been awarded—

(i) Effect appropriate contractual remedies, including profit recapture as provided for in the clause at 52.203–10, Price or Fee Adjustment for Illegal or Improper Activity, or, if the contract has been rescinded under paragraph (d)(2)(ii) of this subsection, recovery of the amount expended under the contract;

(ii) Void or rescind the contract with respect to which—

(A) The contractor or someone acting for the contractor has been convicted for an offense where the conduct constitutes a violation of subsections 27 (a) or (b) of the Act for the purpose of either—

(*1*) Exchanging the information covered by such subsections for anything of value; or

(*2*) Obtaining or giving anyone a competitive advantage in the award of a Federal agency procurement contract; or

(B) The head of the agency, or designee, has determined, based upon a preponderance of the evidence, that the contractor or someone acting for the contractor has engaged in conduct constituting an offense punishable under subsection 27(e)(1) of the Act; or

(iii) Take any other appropriate actions in the best interests of the Government.

(3) Refer the matter to the agency suspension and debarment official.

(e) The HCA or designee shall recommend or direct an administrative or contractual remedy commensurate with the severity and effect of the violation.

(f) If the HCA or designee receiving information concerning a violation or possible violation determines that award is justified by urgent and compelling circumstances, or is otherwise in the interests of the Government, the HCA may authorize the contracting officer to award the contract or execute the contract modification after notification to the head of the agency in accordance with agency procedures.

(g) The HCA may delegate his or her authority under this subsection to an individual at least one organizational level above the contracting officer and of General Officer, Flag, Senior Executive Service, or equivalent rank.

3.104–11 Criminal and civil penalties, and further administrative remedies.

Criminal and civil penalties, and administrative remedies, may apply to conduct which violates the Act (see 3.104–4). See 33.102(f) for special rules regarding bid protests. See 3.104–10 for administrative remedies relating to contracts.

(a) An official who knowingly fails to comply with the requirements of 3.104–4 shall be subject to the penalties and administrative action set forth in subsection 27(e) of the Act.

(b) A bidder or offeror who engages in employment discussion with an official subject to the restrictions of 3.104–4, knowing that the official has not complied with 3.104–4(c)(1), shall be subject to the criminal, civil or administrative penalties set forth in subsection 27(e) of the Act.

(c) An official who refuses to terminate employment discussions (see

3.104–6) may be subject to agency administrative actions under 5 CFR 2635.604(d) if the official's disqualification from participation in a particular procurement interferes substantially with the individual's ability to perform assigned duties.

4. Section 3.700(a) is revised to read as follows:

3.700 Scope of subpart.

(a) This subpart prescribes Governmentwide policies and procedures for exercising discretionary authority to declare void and rescind contracts in relation to which—

(1) There has been a final conviction for bribery, conflict of interest, disclosure or receipt of contractor bid or proposal information or source selection information in exchange for a thing of value or to give anyone a competitive advantage in the award of a Federal agency procurement contract, or similar misconduct; or

(2) There has been an agency head determination that contractor bid or proposal information or source selection information has been disclosed or received in exchange for a thing of value, or for the purpose of obtaining or giving anyone a competitive advantage in the award of a Federal agency procurement contract.

* * * * *

5. Section 3.701 is revised to read as follows:

3.701 Purpose.

This subpart provides—

(a) An administrative remedy with respect to contracts in relation to which there has been—

(1) A final conviction for bribery, conflict of interest, disclosure or receipt of contractor bid or proposal information or source selection information in exchange for a thing of value or to give anyone a competitive advantage in the award of a Federal agency procurement contract, or similar misconduct; or

(2) An agency head determination that contractor bid or proposal information or source selection information has been disclosed or received in exchange for a thing of value, or for the purpose of obtaining or giving anyone a competitive advantage in the award of a Federal agency procurement contract; and

(b) A means to deter similar misconduct in the future by those who are involved in the award, performance, and administration of Government contracts.

6. Section 3.703 is amended by redesignating the text as paragraph ''(a)'', and by adding paragraph (b) to read as follows:

3.703 Authority.

* * * * *

(b) Subsection 27(e)(3) of the Office of Federal Procurement Policy Act (41 U.S.C. 423) (the OFPP Act), as amended, requires a Federal agency, upon receiving information that a contractor or a person has engaged in conduct constituting a violation of subsection 27 (a) or (b) of the OFPP Act, to consider recission of a contract with respect to which—

(1) The contractor or someone acting for the contractor has been convicted for an offense punishable under subsection 27(e)(1) of the OFPP Act; or

(2) The head of the agency, or designee, has determined, based upon a preponderance of the evidence, that the contractor or someone acting for the contractor has engaged in conduct constituting such an offense.

7. Section 3.704 is amended in paragraph (b) by removing ''FAR'' and by adding paragraph (c) to read as follows:

3.704 Policy.

* * * * *

(c) If there is a final conviction for an offense punishable under subsection 27(e) of the OFPP Act, or if the head of the agency, or designee, has determined, based upon a preponderance of the evidence, that the contractor or someone acting for the contractor has engaged in conduct constituting such an offense, then the head of the contracting activity shall consider, in addition to any other penalty prescribed by law or regulation—

(1) Declaring void and rescinding contracts, as appropriate, and recovering the amounts expended under the contracts by using the procedures at 3.705 (see 3.104–10); and

(2) Recommending the initiation of suspension or debarment proceedings in accordance with subpart 9.4.

8. Section 3.705 is amended by revising the last sentence in paragraph (c)(3) and paragraph (d)(3) to read as follows:

3.705 Procedures.

* * * * *

(c) * * *

(3) * * * However, no inquiry shall be made regarding the validity of a conviction.

* * * * *

(d) * * *

(3) Specifically identify the offense or final conviction on which the action is based;

* * * * *

PART 4—ADMINISTRATIVE MATTERS

9. Section 4.802(e) is revised to read as follows:

4.802 Contract files.

* * * * *

(e) Contents of contract files that are contractor bid or proposal information or source selection information as defined in 3.104–3 shall be protected from disclosure to unauthorized persons (see 3.104–5).

* * * * *

4.803 [Amended]

10. Section 4.803 is amended by removing paragraph (a)(42), and by redesignating paragraph (a)(43) as (a)(42).

PART 9—CONTRACTOR QUALIFICATIONS

9.105–3 [Amended]

11. Section 9.105–3(c) is amended by revising the parenthetical ''(see 3.104–4 (j) and (k))'' to read ''(see 3.104–3)''.

9.106–3 [Amended]

12. Section 9.106–3 is amended in paragraph (a) by removing the paragraph designation ''(a)'', and by removing paragraph (b).

9.505 [Amended]

13. Section 9.505 is amended in paragraph (b)(1) by removing ''3.104–4(j)'' and inserting ''3.104–3'' in its place, and in (b)(2) by removing ''3.104–4(k)'' and inserting ''3.104–3'' in its place.

PART 12—ACQUISITION OF COMMERCIAL ITEMS

12.503 [Amended]

14. Section 12.503 is amended by removing paragraph (b)(4), and by redesignating paragraphs (b) (5) and (6) as (b) (4) and (5), respectively.

12.504 [Amended]

15. Section 12.504 is amended by removing paragraph (b)(3), and by redesignating paragraph (b)(4) as (b)(3).

PART 14—SEALED BIDDING

14.404–2 [Amended]

16. Section 14.404–2 is amended by removing paragraph (m).

PART 15—CONTRACTING BY NEGOTIATION

17. Section 15.413 is revised to read as follows:

15.413 Disclosure and use of information before award.

See 3.104 for statutory and regulatory requirements related to the disclosure of contractor bid or proposal information and source selection information.

15.413–2 [Amended]

18. Section 15.413–2 is amended by removing paragraph (f)(6).

19. Section 15.509 is amended by revising paragraph (f)(4), and by removing (h)(3) to read as follows:

15.509 Limited use of data.

* * * * *

(f) * * *

(4) Require any non-government evaluator to give a written agreement stating that data in the proposal will not be disclosed to others outside the Government.

* * * * *

20. Section 15.805–5 is amended by revising paragraph (j) and by removing paragraph (k) to read as follows:

15.805–5 Field pricing support.

* * * * *

(j) Field pricing reports, including audit and technical reports, may contain proprietary and/or source selection information (see 3.104–3), and the cover page and all pages containing such information should be marked with the appropriate legend and protected accordingly.

PART 19—SMALL BUSINESS PROGRAMS

19.811–1 [Amended]

21. Section 19.811–1 is amended by removing paragraph (d).

19.811–2 [Amended]

22. Section 19.811–2 is amended by removing paragraph (b) and by redesignating paragraph (c) as (b).

PART 33—PROTESTS, DISPUTES, AND APPEALS

23. Section 33.102 is amended by adding paragraph (f) to read as follows:

33.102 General.

* * * * *

(f) No person may file a protest at GAO for a procurement integrity violation unless that person reported to the contracting officer the information constituting evidence of the violation within 14 days after the person first discovered the possible violation (41 U.S.C. 423(g)).

PART 37—SERVICE CONTRACTING

37.103 37.103 [Amended]

24. Section 37.103 is amended by removing paragraph (c) and by redesignating paragraph (d) as (c).

PART 43—CONTRACT MODIFICATIONS

43.106 [Reserved]

25. Section 43.106 is removed and reserved.

PART 52--SOLICITATION PROVISIONS AND CONTRACT CLAUSES

26. Section 52.203–8 is revised to read as follows:

52.203–8 Cancellation, Rescission, and Recovery of Funds for Illegal or Improper Activity.

As prescribed in 3.104–9(a), insert the following clause in solicitations and contracts:

CANCELLATION, RESCISSION, AND RECOVERY OF FUNDS FOR ILLEGAL OR IMPROPER ACTIVITY (JAN 1997)

(a) If the Government receives information that a contractor or a person has engaged in conduct constituting a violation of subsection (a), (b), (c), or (d) of Section 27 of the Office of Federal Procurement Policy Act (41 U.S.C. 423) (the Act), as amended by section 4304 of the 1996 National Defense Authorization Act for Fiscal Year 1996 (Pub. L. 104–106), the Government may—

(1) Cancel the solicitation, if the contract has not yet been awarded or issued; or

(2) Rescind the contract with respect to which—

(i) The Contractor or someone acting for the Contractor has been convicted for an offense where the conduct constitutes a violation of subsection 27 (a) or (b) of the Act for the purpose of either—

(A) Exchanging the information covered by such subsections for anything of value; or

(B) Obtaining or giving anyone a competitive advantage in the award of a Federal agency procurement contract; or

(ii) The head of the contracting activity has determined, based upon a preponderance of the evidence, that the Contractor or someone acting for the Contractor has engaged in conduct constituting an offense punishable under subsections 27(e)(1) of the Act.

(b) If the Government rescinds the contract under paragraph (a) of this clause, the Government is entitled to recover, in addition to any penalty prescribed by law, the amount expended under the contract.

(c) The rights and remedies of the Government specified herein are not exclusive, and are in addition to any other rights and remedies provided by law, regulation, or under this contract.

(End of clause)

52.203–9 [Reserved]

27. Section 52.203–9 is removed and reserved.

28. Section 52.203–10 is amended by revising the introductory text, clause date, and paragraphs (a) and (b)(5) to read as follows:

52.203–10 Price or Fee Adjustment for Illegal or Improper Activity.

As prescribed in 3.104–9(b), insert the following clause:

PRICE OR FEE ADJUSTMENT FOR ILLEGAL OR IMPROPER ACTIVITY (JAN 1997)

(a) The Government, at its election, may reduce the price of a fixed-price type contract and the total cost and fee under a cost-type contract by the amount of profit or fee determined as set forth in paragraph (b) of this clause if the head of the contracting activity or designee determines that there was a violation of subsection 27 (a), (b), or (c) of the Office of Federal Procurement Policy Act, as amended (41 U.S.C. 423), as implemented in section 3.104 of the Federal Acquisition Regulation.

(b) * * *

(5) For firm-fixed-price contracts, by 10 percent of the initial contract price or a profit amount determined by the Contracting Officer from records or documents in existence prior to the date of the contract award.

* * * * *

(End of clause)

52.203–13 [Reserved]

29. Section 52.203–13 is removed and reserved.

52.212–3 [Amended]

30. Section 52.212–3 is amended by revising the clause date to read ''(JAN 1997)'' and by removing paragraph (i).

PART 53—FORMS

53.203 [Reserved]

31. Section 53.203 is removed and reserved.

53.302–333 [Removed]

32. In section 53.302–333, Optional Form 333 is removed.

[FR Doc. 96–33205 Filed 12–31–96; 8:45 am]

BILLING CODE 6820–EP–P

---

48 CFR Parts 1, 3, 4, 6, 8, 9, 12, 14, 16, 19, 23, 27, 29, 31, 32, 36, 37, 42, 45, 47, 49, 52, and 53

[FAC 90–45; FAR Case 96–312; Item II]

RIN 9000–AH23

Federal Acquisition Regulation; Certification Requirements

AGENCIES: Department of Defense (DOD), General Services Administration (GSA), and National Aeronautics and Space Administration (NASA).

ACTION: Final rule.

SUMMARY: The Civilian Agency Acquisition Council and the Defense

Acquisition Regulations Council have agreed on a final rule to amend the Federal Acquisition Regulation (FAR) to remove particular certification requirements for contractors and offerors. This final rule implements Section 4301(b) of Public Law 104–106. This regulatory action was not subject to Office of Management and Budget review under Executive Order 12866, dated September 30, 1993, and is not a major rule under 5 U.S.C. 804.

EFFECTIVE DATE: January 1, 1997.

FOR FURTHER INFORMATION CONTACT: Mr. Jack O'Neill at (202) 501–3856 in reference to this FAR case. For general information, contact the FAR Secretariat, Room 4037, GS Building, Washington, DC 20405, (202) 501–4755. Please cite FAC 90–45, FAR case 96–312. E-mail correspondence submitted over the Internet should be addressed to: 96–312@V.GSA.GOV

SUPPLEMENTARY INFORMATION:

A. Background

This final rule amends FAR Parts 1, 3, 4, 6, 8, 9, 12, 14, 16, 19, 23, 27, 29, 31, 32, 36, 37, 42, 45, 47, 49, 52, and 53 to remove particular certification requirements for contractors and offerors. The rule implements Section 4301(b) of the Clinger-Cohen Act of 1996 (Public Law 104–106). Section 4301(b) required the Administrator, Office of Federal Procurement Policy, to issue for public comment a proposal to remove from the FAR those certification requirements for contractors and offerors that are not specifically imposed by statute. A proposed rule was published in the Federal Register on September 12, 1996 (61 FR 48354). Thirty comments were received from seven respondents. All comments were considered in the development of the final rule.

In response to the public comments, FAR 52.242–4, Certification of Indirect Costs, was amended to reduce the scope of the certification requirement and to remove the requirement to certify under penalty of perjury. The requirement at FAR 32.304–8 to provide certificates also was removed, and an editorial change was made at FAR 52.215–35 to substitute the word ''offer'' for ''bid'' in paragraph (a).

The certification at 52.213–1, Fast Payment, is being retained for several reasons: (a) One large industry trade organization, in its public comments, acknowledged that this certification is useful and potentially beneficial to industry; (b) The Government has higher confidence in the accuracy of the request for payment, since it is expected to receive a higher degree of scrutiny by the contractor before it is certified and submitted; and (c) The payment office is frequently separate and distinct from the contract administration office, and the certification provides the paying office with documentation that the items have been delivered independent of a separate source inspection documentation.

Several certifications associated with Foreign Contracting had been proposed for elimination. However, upon consideration of public comments received in response to the proposed rule, these certifications were retained, because the self-policing discipline of a certification requirement is important to enforcing a national policy grounded in vital economic and security interests. The Government believes that elimination of these certification requirements would have created a need for offerors to submit more detailed information regarding the origin of offered products. Therefore, the certification is viewed as a less burdensome alternative. The certification required by 52.223–1, Clean Air and Water Certification, has been retained because the Government has concluded that the certification is the least burdensome and most effective way to avoid entering into a contract with a Clean Air Act or Clean Water Act violator. In the near future, we will be publishing for public comment a proposal to substitute a more limited clean air and water certification and a Clean Air and Water Act notification for commercial items. An associated change is made in FAR case 93–310, Item VI of this FAC. The certification required by 52.223–1, Clean Air and Water Certification, was also revised and retained because the Government concluded that it would be the least burdensome and most effective way to avoid entering into a contract with a Clean Air Act or Clean Water Act Violator. Interested parties are invited to submit comments on the retention of these certification requirements. Please cite Holding File 96–708–01, Regulatory Reform—Certifications, in correspondence. Comments should be limited to the retention of the following certifications for contractors and offerors which were proposed for elimination but have been retained as a result of the analysis of public comments.

FAR cite	Clause/provision No.	Title
22.810(a)(1)	52.222–21	Certification of Nonsegregated Facilities.
23.105(a)	52.223–1	Clean Air and Water Certification.
25.109(a)	52.225–1	Buy American Certificate.
25.305	52.225–6	Balance of Payments Program Certificate
	52.225–7	Balance of Payments Program.
25.408(a)(1)	52.225–8	Buy American Act—Trade Agreements—Balance of Payments Program Certificate.
25.408(a)(2)	52.225–9	Buy American Act—Trade Agreements—Balance of Payments Program.
25.408(a)(3)	52.225–20	Buy American Act—North American Free Trade Agreement Implementation Act—Balance of Payments Program Certificate (amended).
25.408(a)(4)	52.225–21	Buy American Act—North American Free Trade Agreement Implementation Act—Balance of Payments Program.
25.408(b)		Solicitation provisions and contract clauses.

B. Regulatory Flexibility Act

This final rule is expected to have a significant beneficial impact on a substantial number of small entities within the meaning of the Regulatory Flexibility Act, 5 U.S.C. 601, et seq., because it reduces the number of certifications that offerors and contractors must provide to the Government. A Final Regulatory Flexibility Analysis (FRFA) has been prepared and will be provided to the Chief Counsel for Advocacy of the Small Business Administration. A copy of the FRFA may be obtained from the FAR Secretariat. The analysis is summarized as follows: The objective and legal basis for this rule is Section 4301(b) of the Clinger-Cohen Act of 1996 (Public Law 104–106). The rule implements Section 4301(b) by amending the FAR to remove particular certification requirements for contractors and offerors.

There were no public comments received in response to the initial regulatory flexibility analysis. Several changes were made in the final rule as a result of public comments received in response to the proposed rule. All of the certifications required by FAR Part 25 have been retained. The certification required by FAR 52.223–1 was also retained. The Certification of Final Indirect Costs at FAR 52.242–4 was revised to remove the requirement to sign the certification under penalty of perjury, and the requirement to provide certificates was deleted from FAR 32.304–8.

The rule will apply to all bidders or offerors, and contractors, large and small, whose direct economic interests would be affected by the award or failure to award a Government contract. The number of small entities to which the rule will apply is estimated to be between 35,000 and 45,000. This rule does not impose any additional reporting, recordkeeping, or other compliance requirements.

This rule is expected to have a beneficial impact on small entities by deleting existing certification requirements that are not required by statute.

C. Paperwork Reduction Act

The Paperwork Reduction Act (Public Law 96–511) is deemed to apply because the final rule eliminates existing recordkeeping and information collection requirements approved by the Office of Management and Budget (OMB) under OMB Control Numbers 9000–0017, and 9000–0111. A paperwork burden of 67,375 hours is eliminated.

List of Subjects in 48 CFR Parts 1, 3, 4, 6, 8, 9, 12, 14, 16, 19, 23, 27, 29, 31, 32, 36, 37, 42, 45, 47, 49, 52, and 53

Government procurement.

Dated: December 24, 1996.

Edward C. Loeb,

Director, Federal Acquisition Policy Division.

Therefore, 48 CFR Parts 1, 3, 4, 6, 8, 9, 12, 14, 16, 19, 23, 27, 29, 31, 32, 36, 37, 42, 45, 47, 49, 52, and 53 are amended as set forth below:

1. The authority citation for 48 CFR Parts 1, 3, 4, 6, 8, 9, 12, 14, 16, 19, 23, 27, 29, 31, 32, 36, 37, 42, 45, 47, 49, 52, and 53 continues to read as follows:

Authority: 40 U.S.C. 486(c); 10 U.S.C. chapter 137; and 42 U.S.C. 2473(c).

PART 1—FEDERAL ACQUISITION REGULATIONS SYSTEM

1.106 [Amended]

2. Section 1.106 is amended in the table following the text by removing the following entries along with their control numbers: 8.203–2, 9.5, and 52.208–1.

PART 3—IMPROPER BUSINESS PRACTICES AND PERSONAL CONFLICTS OF INTEREST

3. Section 3.502–2(i)(1) is revised to read as follows:

3.502–2 Subcontractor kickbacks.

* * * * *

(i) * * *

(1) Have in place and follow reasonable procedures designed to prevent and detect violations of the Act in its own operations and direct business relationships (e.g., company ethics rules prohibiting kickbacks by employees, agents, or subcontractors; education programs for new employees and subcontractors, explaining policies about kickbacks, related company procedures and the consequences of detection; procurement procedures to minimize the opportunity for kickbacks; audit procedures designed to detect kickbacks; periodic surveys of subcontractors to elicit information about kickbacks; procedures to report kickbacks to law enforcement officials; annual declarations by employees of gifts or gratuities received from subcontractors; annual employee declarations that they have violated no company ethics rules; personnel practices that document unethical or illegal behavior and make such information available to prospective employers); and

* * * * *

PART 4—ADMINISTRATIVE MATTERS

4. Section 4.102 is amended by revising the last sentence of paragraph (d) to read as follows:

4.102 Contractor's signature.

* * * * *

(d) *Joint ventures.* * * * When a corporation is participating, the contracting officer shall verify that the corporation is authorized to participate in the joint venture.

* * * * *

PART 6—COMPETITION REQUIREMENTS

6.302–3 [Amended]

5. Section 6.302–3 is amended in paragraph (b)(1)(vi) by inserting ''or'' at the end; in paragraph (b)(1)(vii) by removing ''; or'' and inserting a period in its place; and by removing paragraph (b)(1)(viii).

PART 8—REQUIRED SOURCES OF SUPPLIES AND SERVICES

6. Section 8.002 is amended by removing paragraph (a), redesignating paragraphs (b) through (f) as (a) through (e); and revising newly redesignated paragraphs (a) and (d) to read as follows:

8.002 Use of other Government supply sources.

* * * * *

(a) Public utility services (see part 41);

* * * * *

(d) Strategic and critical materials (e.g., metals and ores) from inventories exceeding Defense National Stockpile requirements (detailed information is available from the Defense National Stockpile Center, 8725 John J. Kingman Rd., Suite 4528, Fort Belvoir, VA 22060–6223; and

* * * * *

Subpart 8.2 [Reserved]

7. Subpart 8.2 is removed and reserved.

PART 9—CONTRACTOR QUALIFICATIONS

9.505–4 [Amended]

8. Section 9.505–4(c) is amended by removing the last sentence.

9. Section 9.506 is amended in paragraph (a) by revising the first sentence; in paragraph (d)(3) by replacing ''; and,'' with a period; and by removing paragraph (d)(4). The revised text reads as follows:

9.506 Procedures.

(a) If information concerning prospective contractors is necessary to identify and evaluate potential organizational conflicts of interest or to develop recommended actions, contracting officers first should seek the information from within the Government or from other readily available sources. * * *

* * * * *

9.507–1 [Amended]

10. Section 9.507–1 is amended by removing the paragraph (a) designation and removing paragraphs (b), (c), and (d).

PART 12—ACQUISITION OF COMMERCIAL ITEMS

11. Section 12.503 is amended by revising paragraphs (b)(1) and (b)(4) to read as follows:

12.503 Applicability of certain laws to Executive agency contracts for the acquisition of commercial items.

* * * * *

(b) * * *

(1) 33 U.S.C. 1368, Requirement for a clause under the Federal Water Pollution Control Act (see 23.105).

* * * * *

(4) 42 U.S.C. 7606, Requirements for a clause under the Clean Air Act (see 23.105).

* * * * *

12.504 [Amended]

12. Section 12.504 is amended by removing paragraph (a)(16).

PART 14—SEALED BIDDING

14.405 [Amended]

13. Section 14.405(f) is amended by removing ''certifications'' and inserting ''representations'' in its place.

PART 16—TYPES OF CONTRACTS

16.306 [Amended]

14. Section 16.306 is amended in the second sentence of paragraph (d)(2) by removing ''certification'' and inserting ''statement'' in its place.

PART 19—SMALL BUSINESS PROGRAMS

19.001 [Amended]

15. At section 19.001, the definition ''Small disadvantaged business concern'' is amended in paragraph (b) by removing ''certify'' and inserting ''represent'' in its place.

16. Section 19.301 is amended by revising the first sentence of paragraph (a) to read as follows:

19.301 Representation by the offeror.

(a) To be eligible for award as a small business, an offeror must represent in good faith that it is a small business at the time of its written representation. * * *

* * * * *

17. Section 19.303 is amended by revising the introductory text of paragraph (c)(2); in paragraph (c)(2)(vi) by removing ''certifying'' and inserting ''acknowledging'' in its place; and by revising the second sentence of paragraph (c)(3) to read as follows:

19.303 Determining product or service classifications.

* * * * *

(c) * * *

(2) The appeal shall be in writing and shall be addressed to the Office of Hearings and Appeals, Small Business Administration, Washington, DC 20416. No particular form is prescribed for the appeal. However, time limits and procedures set forth in SBA's regulations at 13 CFR 121.11 are strictly enforced. The appellant shall submit an original and one legible copy of the appeal. In the case of telegraphic appeals, the telegraphic notice shall be confirmed by the next day mailing of a written appeal, in duplicate. By signing the submission, a party or its attorney attests that the statements and allegations in the submission are true to the best of its knowledge, and that the submission is not being filed for the purpose of delay or harassment. The appeal shall include—

* * * * *

(3) * * * The contracting officer's response, if any, to the appeal must include appropriate argument and evidence, and must be filed with the Office of Hearings and Appeals no later than 5 business days after receipt of the appeal. * * *

19.501 [Amended]

18. Section 19.501 is amended by removing paragraph (h).

19.508 [Amended]

19. Section 19.508 is amended by removing paragraph (f).

20. Section 19.703 is amended in paragraph (a)(2) by revising the second and fourth sentences to read as follows:

19.703 Eligibility requirements for participating in the program.

(a) * * *

(2) * * * Individuals who represent that they are members of named groups (Black Americans, Hispanic Americans, Native Americans, Asian-Pacific Americans, Subcontinent-Asian Americans) may also represent themselves as socially and economically disadvantaged. * * * Concerns that are tribally owned entities or Native Hawaiian Organizations may represent themselves as socially and economically disadvantaged if they qualify under the requirements of 13 CFR 124.112 or 13 CFR 124.113, respectively. * * *

* * * * *

PART 23—ENVIRONMENT, CONSERVATION, OCCUPATIONAL SAFETY, AND DRUG-FREE WORKPLACE

23.102 [Amended]

21. Section 23.102 is amended in paragraph (d) by removing the reference ''40 CFR part 15'' and inserting ''40 CFR part 32'' in its place.

22. Section 23.302 is amended by revising paragraph (d)(1) to read as follows:

23.302 Policy.

* * * * *

(d) * * *

(1) By the apparent successful offeror prior to contract award if hazardous materials are expected to be used during contract performance.

* * * * *

23. Section 23.601 is amended by revising paragraph (c) to read as follows:

23.601 Requirements.

* * * * *

(c) The clause permits the contracting officer to waive the notification if the contractor states that the notification on prior deliveries is still current. The contracting officer may waive the notice only after consultation with cognizant technical representatives.

* * * * *

PART 27—PATENT, DATA, AND COPYRIGHTS

24. Section 27.303(e) is amended by revising the first sentence to read as follows:

27.303 Contract clauses.

* * * * *

(e) For those agencies excepted under paragraph (a)(1)(i) of this section, only small business firms or non-profit organizations qualify for the clause at 52.227–11. * * *

* * * * *

25. Section 27.406 is amended by revising paragraph (c); in paragraph (d)(1) and (d)(2), and twice in (d)(3) by removing ''(C) certification'' and inserting ''(D) declaration''; and in paragraph (d)(2) by removing ''certify'' and inserting ''declare'' in its place. The revised text reads as follows:

27.406 Acquisition of data.

* * * * *

(c) *Acceptance of data.* As required by 41 U.S.C. 418a(d)(7), acceptability of technical data delivered under a contract shall be in accordance with the appropriate contract clause as required by subpart 46.3, and the clause at 52.227–21, Technical Data Declaration, Revision, and Withholding of Payment—Major Systems, when it is included in the contract. (See paragraph (d) of this section.)

* * * * *

27.409 [Amended]

26. Section 27.409 is amended in paragraph (q) by removing ''Certification'' and inserting ''Declaration'' in its place.

PART 29—TAXES

29.302 [Amended]

27. Section 29.302 is amended in the second sentence of paragraph (b) by revising the word ''Certificate'' to read ''Form''.

28. Section 29.305 is amended in paragraph (a)(3) by revising the word ''Certificate'' to read ''Form''; and by revising paragraph (b)(3) to read as follows:

29.305 State and local tax exemptions.

* * * * *

(b) * * *

(3) Under a contract or purchase order that contains no tax provision, if—

(i) Requested by the contractor and approved by the contracting officer or at the discretion of the contracting officer; and

(ii) Either the contract price does not include the tax or, if the transaction or property is tax exempt, the contractor consents to a reduction in the contract price.

PART 31—CONTRACT COST PRINCIPLES AND PROCEDURES

29. Section 31.110 is amended by revising the first sentence of paragraph (a) to read as follows:

31.110 Indirect cost rate certification and penalties on unallowable costs.

(a) Certain contracts require certification of the indirect cost rates proposed for final payment purposes. * * *

* * * * *

31.205–22 Lobbying and political activity costs.

30. Section 31.205–22 is amended by removing paragraph (d) and redesignating paragraphs (e) and (f) as (d) and (e), respectively; and in the newly designated (d) by adding ''(see 42.703–2)'' after ''unallowable''.

PART 32—CONTRACT FINANCING

32.304–8 Amended]

31. Section 32.304–8 is amended in paragraph (b)(3) by revising the word ''certificates'' to read ''documentation''.

32.805 [Amended]

32. Section 32.805 is amended in paragraph (a)(1)(iii) by removing ''certified'' and inserting ''true'' in its place.

PART 36—CONSTRUCTION AND ARCHITECT-ENGINEER CONTRACTS

33. Section 36.205 is amended by revising paragraph (b)(3) to read as follows:

36.205 Statutory cost limitations.

* * * * *

(b) * * *

(3) That the price on each schedule shall include an approximate apportionment of all estimated direct costs, allocable indirect costs, and profit.

* * * * *

PART 37—SERVICE CONTRACTING

34. Section 37.402 is revised to read as follows:

37.402 Contracting officer responsibilities.

Contracting officers shall obtain evidence of insurability concerning medical liability insurance from the apparent successful offeror prior to contract award and shall obtain evidence of insurance demonstrating the required coverage prior to commencement of performance.

PART 42—CONTRACT ADMINISTRATION

42.302 [Amended]

35. Section 42.302 is amended in paragraph (a)(18) by revising the word ''certificates'' to read ''forms''.

36. Section 42.703–2 is amended by revising paragraphs (a) and (c)(1); in paragraph (c)(2)(ii) by removing the word ''potentially''; in paragraph (d) by inserting the word ''final'' after ''of''; and by revising paragraph (f) to read as follows:

42.703–2 Certificate of indirect costs.

(a) *General.* In accordance with 10 U.S.C. 2324(h) and 41 U.S.C. 256(h), a proposal shall not be accepted and no agreement shall be made to establish final indirect cost rates unless the costs have been certified by the contractor.

* * * * *

(c) * * *

(1) If the contractor has not certified its proposal for final indirect cost rates and a waiver is not appropriate, the contracting officer may unilaterally establish the rates.

* * * * *

(f) *Contract clause.* (1) Except as provided in paragraph (f)(2) of this subsection, the clause at 52.242–4, Certification of Indirect Costs, shall be incorporated into all solicitations and contracts which provide for establishment of final indirect cost rates.

(2) The Department of Energy may provide an alternate clause in its agency supplement for its Management and Operating contracts.

PART 45—GOVERNMENT PROPERTY

45.606–1 [Amended]

37. Section 45.606–1 is amended by removing the designation of paragraph (a); and by removing paragraph (b).

45.606–5 [Amended]

38. Section 45.606–5 is amended in the parenthetical at the end of paragraph (a)(2) by revising ''45.606–1(a).)'' to read ''45.606–1.)''

PART 47—TRANSPORTATION

39. Section 47.303–17 is amended by revising paragraph (d)(3)(ii) to read as follows:

47.303–17 Contractor-prepaid commercial bills of lading, small package shipments.

* * * * *

(d) * * *

(3) * * *

(ii) The contractor agrees to furnish evidence of payment when requested by the Government.

* * * * *

47.305–11 [Amended]

40. Section 47.305–11 is amended by removing the designation of paragraph (a) and adding the text to the end of the undesignated introductory paragraph which precedes it; by removing paragraph (b); and redesignating paragraphs (a)(1) through (3) as (a) through (c).

41. Section 47.403–3 is amended in paragraph (a) by removing ''certificate or''; and by revising paragraph (c) to read as follows:

47.403–3 Disallowance of expenditures.

* * * * *

(c) The justification requirement is satisfied by the contractor's use of a statement similar to the one contained in the clause at 52.247–63, Preference for U.S.-Flag Air Carriers. (See 47.405.)

42. Section 47.404 is amended by revising paragraph (b)(2) to read as follows:

47.404 Air freight forwarders.

* * * * *

(b) * * *

(2) justification for the use of foreign-flag air carriers similar to the one shown in the clause at 52.247–63, Preference for U.S.-Flag Air Carriers.

PART 49—TERMINATION OF CONTRACTS

43. Section 49.108–3 is amended by revising paragraph (b) to read as follows:

49.108–3 Settlement procedure.

* * * * *

(b) Except as provided in 49.108–4, the TCO shall require that—

(1) All subcontractor termination inventory be disposed of and accounted for in accordance with part 45; and

(2) The prime contractor submit, for approval or ratification, all termination settlements with subcontractors.

* * * * *

PART 52—SOLICITATION PROVISIONS AND CONTRACT CLAUSES

52.208–1 and 52.208–2 [Removed and Reserved]

44. Sections 52.208–1 and 52.208–2 are removed and reserved.

45. Section 52.209–3 is amended in Alternate I by revising the date and paragraph (i) to read as follows:

52.209–3 First Article Approval—Contractor Testing.

* * * * *

Alternate I (JAN 1997). * * *

(i) The Contractor shall produce both the first article and the production quantity at the same facility.

* * * * *

46. Section 52.209–4 is amended by revising the date and paragraph (j) of Alternate I to read as follows:

52.209–4 First Article Approval—Government Testing.

* * * * *

Alternate I (JAN 1997). * * *

(j) The Contractor shall produce both the first article and the production quantity at the same facility.

* * * * *

52.209–7 and 52.209–8 [Removed]

47. Sections 52.209–7 and 52.209–8 are removed.

48. Section 52.212–3 is amended by revising the provision date, paragraph (c)(2), the introductory text of (c)(6), and the last sentence of the introductory text of (c)(6)(ii) to read as follows:

52.212–3 Offeror Representations and Certifications—Commercial Items.

* * * * *

OFFEROR REPRESENTATIONS AND CERTIFICATIONS—COMMERCIAL ITEMS (JAN 1997)

* * * * *

(c) * * *

(2) *Small disadvantaged business concern.* The offeror represents that it ☐ is, ☐ is not a small disadvantaged business concern.

* * * * *

(6) Small Business Size for the Small Business Competitiveness Demonstration Program and for the Targeted Industry Categories under the Small Business Competitiveness Demonstration Program. [*Complete only if the offeror has represented itself to be a small business concern under the size standards for this solicitation.*]

* * * * *

(ii) * * * Offeror represents as follows:

* * * * *

49. Section 52.214–30 is revised to read as follows:

52.214–30 Annual Representations and Certifications—Sealed Bidding.

As prescribed in 14.201–6(u), insert the following provision:

ANNUAL REPRESENTATIONS AND CERTIFICATIONS—SEALED BIDDING (JAN 1997)

The bidder has (check the appropriate block):

☐ (a) Submitted to the contracting office issuing this solicitation, annual representations and certifications dated _____ [*insert date of signature on submission*], which are incorporated herein by reference, and are current, accurate, and complete as of the date of this bid, except as follows [*insert changes that affect only this solicitation; if ''none,'' so state*]:

_____

☐ (b) Enclosed its annual representations and certifications.

(End of provision)

50. Section 52.215–35 is revised to read as follows:

52.215–35 Annual Representations and Certifications—Negotiation.

As prescribed in 15.407(i), insert the following provision:

ANNUAL REPRESENTATIONS AND CERTIFICATIONS—NEGOTIATION (JAN 1997)

The offeror has (check the appropriate block):

☐ (a) Submitted to the contracting office issuing this solicitation, annual representations and certifications dated _____ [*insert date of signature on submission*] which are incorporated herein by reference and are current, accurate, and complete as of the date of this offer, except as follows [*insert changes that affect only this solicitation; if ''none,'' so state*]:

_____

☐ (b) Enclosed its annual representations and certifications.

(End of provision)

52.216–2 [Amended]

51. Section 52.216–2 is amended by revising the clause date to read ''(JAN 1997)''; and in paragraph (b) by removing the last sentence.

52.216–3 [Amended]

52. Section 52.216–3 is amended by revising the clause date to read ''(JAN 1997)''; and in paragraph (b) by removing the last sentence.

52.216–4 [Amended]

53. Section 52.216–4 is amended by revising the clause date to read ''(JAN 1997)''; and by removing paragraph (d) and redesignating paragraph (e) as (d).

52.219–1 [Amended]

54. Section 52.219–1 is amended by revising the provision date to read ''(JAN 1997)''; and in paragraph (b)(1) by removing ''and certifies''.

52.219–15 [Removed and Reserved]

55. Section 52.219–15 is removed and reserved,

52.219–18 [Amended]

56. Section 52.219–18 is amended by revising the clause date to read ''(JAN 1997)''; and in paragraph (b) by removing ''certifies'' and inserting ''represents'' in its place.

57. Section 52.219–19 is amended by revising the date and paragraph (b) of the provision to read as follows:

52.219–19 Small Business Concern Representation for the Small Business Competitiveness Demonstration Program.

* * * * *

SMALL BUSINESS CONCERN REPRESENTATION FOR THE SMALL BUSINESS COMPETITIVENESS DEMONSTRATION PROGRAM (JAN 1997)

* * * * *

(b) [*Complete only if the Offeror has represented itself under the provision at 52.219–1 as a small business concern under the size standards of this solicitation.*]

The Offeror ☐ is, ☐ is not an emerging small business.

* * * * *

52.219–21 [Amended]

58. Section 52.219–21 is amended by revising the clause date to read (JAN 1997); in the parenthetical following the provision heading by removing ''certified'' and inserting ''represented'' in its place; and in the first paragraph of the provision by removing ''and certifies''.

59. Section 52.223–3 is amended by revising the clause date and paragraphs (c) and (e) to read as follows:

52.223–3 Hazardous Material Identification and Material Safety Data.

* * * * *

HAZARDOUS MATERIAL IDENTIFICATION AND MATERIAL SAFETY DATA (JAN 1997)

* * * * *

(c) This list must be updated during performance of the contract whenever the Contractor determines that any other material to be delivered under this contract is hazardous.

* * * * *

(e) If, after award, there is a change in the composition of the item(s) or a revision to Federal Standard No. 313, which renders incomplete or inaccurate the data submitted under paragraph (d) of this clause, the Contractor shall promptly notify the Contracting Officer and resubmit the data.

* * * * *

60. Section 52.223–7 is amended by revising the clause date and paragraph (b)(2) to read as follows:

52.223–7 Notice of Radioactive Materials.

* * * * *

NOTICE OF RADIOACTIVE MATERIALS (JAN 1997)

* * * * *

(b) * * *

(2) State that the quantity of activity, characteristics, and composition of the radioactive material have not changed; and

* * * * *

52.227–12 [Amended]

61. Section 52.227–12 is amended by revising the clause date to read ''(JAN 1997)''; and in paragraph (f)(7) by removing ''certifying'' wherever it appears and inserting ''stating'' in its place.

52.227–13 [Amended]

62. Section 52.227–13 is amended by revising the clause date to read ''(JAN 1997)''; and in paragraph (e)(3) by removing ''certifying'' wherever it appears and inserting ''stating'' in its place.

63. Section 52.227–21 is amended by revising the section and clause headings, the clause date, paragraph (b)(1), the first sentence of (b)(2), and (d)(1)(ii) to read as follows:

52.227–21 Technical Data Declaration, Revision, and Withholding of Payment—Major Systems.

* * * * *

TECHNICAL DATA DECLARATION, REVISION, AND WITHHOLDING OF PAYMENT—MAJOR SYSTEMS (JAN 1997)

* * * * *

(b) *Technical data declaration.* (1) All technical data that are subject to this clause shall be accompanied by the following declaration upon delivery:

TECHNICAL DATA DECLARATION (JAN 1997)

The Contractor, _____, hereby declares that, to the best of its knowledge and belief, the technical data delivered herewith under Government contract No. _____ (and subcontract _____, if appropriate) are complete, accurate, and comply with the requirements of the contract concerning such technical data.

(End of declaration)

(2) The Government shall rely on the declarations set out in paragraph (b)(1) of this clause in accepting delivery of the technical data, and in consideration thereof may, at any time during the period covered by this clause, request correction of any deficiencies which are not in compliance with contract requirements. * * *

* * * * *

(d) * * *

(1) * * *

(ii) Provide the declaration required by paragraph (b)(1) of this clause;

* * * * *

(End of clause)

64. Section 52.228–5 is amended by revising the clause date and the first sentence of paragraph (b) to read as follows:

52.228–5 Insurance—Work on a Government Installation.

* * * * *

INSURANCE—WORK ON A GOVERNMENT INSTALLATION (JAN 1997)

* * * * *

(b) Before commencing work under this contract, the Contractor shall notify the Contracting Officer in writing that the required insurance has been obtained. * * *

* * * * *

65. Section 52.228–8 is amended by revising the clause date and the first sentence of paragraph (d) to read as follows:

52.228–8 Liability and Insurance—Leased Motor Vehicles.

* * * * *

LIABILITY AND INSURANCE—LEASED MOTOR VEHICLES (JAN 1997)

* * * * *

(d) Before commencing work under this contract, the Contractor shall notify the Contracting Officer in writing that the required insurance has been obtained.

* * * * *

66. Section 52.228–9 is amended by revising the clause date, the second sentence of paragraph (b), and paragraph (c)(2) to read as follows:

52.228–9 Cargo Insurance.

* * * * *

CARGO INSURANCE (JAN 1997)

(a) * * *

(b) * * * As evidence of insurance maintained, an authenticated copy of the cargo liability insurance policy or policies shall be furnished to _____ [*insert name of contracting agency*]. * * *

(c) * * *

(2) An authenticated copy of any renewal policy to _____ [*insert name of contracting agency*] not less than 15 days prior to the expiration of any current policy on file with _____ [*insert name of contracting agency*].

(End of clause)

67. Section 52.237–7 is amended by revising the clause date and the first sentence of paragraph (d) to read as follows:

52.237–7 Indemnification and Medical Liability Insurance.

* * * * *

INDEMNIFICATION AND MEDICAL LIABILITY INSURANCE (JAN 1997)

* * * * *

(d) Evidence of insurance documenting the required coverage for each health care provider who will perform under this contract shall be provided to the Contracting Officer prior to the commencement of services under this contract. * * *

* * * * *

68. Section 52.242–4 is amended by revising the section heading, clause title and date; paragraphs (a)(1), (b), and (c); and the Certificate following paragraph (c). The revised text reads as follows:

52.242–4 Certification of Final Indirect Costs.

* * * * *

CERTIFICATION OF FINAL INDIRECT COSTS (JAN 1997)

(a) * * *

(1) Certify any proposal to establish or modify final indirect cost rates;

* * * * *

(b) Failure by the Contractor to submit a signed certificate, as described in this clause, may result in final indirect costs at rates unilaterally established by the Contracting Officer.

(c) The certificate of final indirect costs shall read as follows:

CERTIFICATE OF FINAL INDIRECT COSTS

This is to certify that I have reviewed this proposal to establish final indirect cost rates and to the best of my knowledge and belief:

1. All costs included in this proposal (*identify proposal and date*) to establish final indirect cost rates for (*identify period covered by rate*) are allowable in accordance with the cost principles of the Federal Acquisition Regulation (FAR) and its supplements applicable to the contracts to which the final indirect cost rates will apply; and

2. This proposal does not include any costs which are expressly unallowable under applicable cost principles of the FAR or its supplements.

Firm: _____

Signature: _____

Name of Certifying Official: _____

Title: _____

Date of Execution: _____

(End of clause)

69. Section 52.245–8 is amended by revising the introductory text, the clause date, and the fourth and fifth sentences of paragraph (f) to read as follows:

52.245–8 Liability for the Facilities.

As prescribed in 45.302–6(b), insert the following clause:

LIABILITY FOR THE FACILITIES (JAN 1997)

* * * * *

(f) * * * Documentation of insurance or an authenticated copy of such insurance shall be deposited promptly with the Contracting Officer. The Contractor shall, not less than 30 days before the expiration of such insurance, deliver to the Contracting Officer documentation of insurance or an authenticated copy of each renewal policy. * * *

* * * * *

(End of clause)

70. Section 52.247–2 is amended by revising the introductory paragraph, the clause date and paragraph (a) to read as follows:

52.247–2 Permits, Authorities, or Franchises.

As prescribed in 47.207–1(a), insert the following clause:

PERMITS, AUTHORITIES, OR FRANCHISES (JAN 1997)

(a) The offeror does ☐, does not ☐, hold authorization from the Federal Highway Administration (FHWA) or other cognizant regulatory body. If authorization is held, it is as follows:

_____

(Name of regulatory body)

_____

(Authorization No.)

* * * * *

[End of clause]

52.247–54 [Removed and Reserved]

71. Section 52.247–54 is removed and reserved.

72. Section 52.247–63 is amended by revising the clause date and the definition ''U.S.-flag air carrier''; in paragraph (b) by removing ''49 U.S.C. 1517'' and inserting ''49 U.S.C. 40118''; and by revising paragraph (d) to read as follows:

52.247–63 Preference for U.S.-Flag Air Carriers.

* * * * *

PREFERENCE FOR U.S.-FLAG AIR CARRIERS (JAN 1997)

* * * * *

(a) * * *

U.S.-flag air carrier, as used in this clause, means an air carrier holding a certificate under 49 U.S.C. Chapter 411.

* * * * *

(d) In the event that the Contractor selects a carrier other than a U.S.-flag air carrier for international air transportation, the Contractor shall include a statement on vouchers involving such transportation essentially as follows:

STATEMENT OF UNAVAILABILITY OF U.S.-FLAG AIR CARRIERS

International air transportation of persons (and their personal effects) or property by U.S.-flag air carrier was not available or it was necessary to use foreign-flag air carrier service for the following reasons (see section 47.403 of the Federal Acquisition Regulation): [*State reasons*]:

_____

(End of statement)

* * * * *

PART 53—FORMS

73. Section 53.214(e) is amended by revising the paragraph heading to read as follows:

53.214 Sealed bidding.

* * * * *

(e) *SF 129 (REV. 12/96), Solicitation Mailing List Application*. * * *

* * * * *

74. Section 53.215–1(f) is amended by revising the paragraph heading to read as follows:

53.215–1 Solicitation and receipt of proposals and quotations.

* * * * *

(f) *SF 129 (REV. 12/96), Solicitation Mailing List Application*. * * *

* * * * *

75. Section 53.222(g) is amended by revising the paragraph heading to read as follows:

53.222 Application of labor laws to Government acquisitions (SF's 99, 308, 1093, 1413, 1444, 1445, 1446, WH–347).

* * * * *

(g) *SF 1445 (REV. 12/96), Labor Standards Interview*. * * *

* * * * *

76. Section 53.229 is amended by revising the paragraph heading to read as follows:

53.229 Taxes (SF's 1094, 1094–A).

SF 1094 (REV. 12/96, U.S. Tax Exemption Form, and SF 1094–A (REV 12/96), Tax Exemption Forms Accountability Record. * * *

77. Section 53.245 is amended in paragraphs (c), (f), (g), (h), (i), and (j) by revising the paragraph headings to read as follows:

53.245 Government property.

* * * * *

(c) *SF 1423 (REV. 12/96), Inventory Verification Survey*.

* * * * *

(f) *SF 1426 (REV. 12/96), Inventory Schedule A (Metals in Mill Product Form), and SF 1427 (REV. 7/89), Inventory Schedule A—Continuation Sheet (Metals in Mill Product Form*). * * *

(g) *SF 1428 (REV. 12/96), Inventory Schedule B, and SF 1429 (REV. 7/89), Inventory Schedule B—Continuation Sheet*. * * *

(h) *SF 1430 (REV. 12/96), Inventory Schedule C (Work-in-Process) and SF 1431 (REV. 7/89), Inventory Schedule C—Continuation Sheet (Work-in-Process*). * * *

(i) *SF 1432 (REV. 12/96), Inventory Schedule D (Special Tooling and Special Test Equipment), and SF 1433 (REV. 7/89), Inventory Schedule D—Continuation Sheet (Special Tooling and Special Test Equipment)*. * * *

(j) *SF 1434 (REV. 12/96), Termination Inventory Schedule E (Short Form for Use with SF 38 Only)*. * * *

53.301–129 [Revised]

78. Section 53.301–129 is revised to read as follows:

53.301–129 SF 129, Solicitation Mailing List Application.

BILLING CODE 6820–EP–P

SOLICITATION MAILING LIST APPLICATION

1. TYPE OF APPLICATION ☐ INITIAL ☐ REVISION

2. DATE

OMB No.: 9000-0002
Expires: 10/31/97

NOTE: Please complete all items on this form. Insert N/A in items not applicable. See reverse for instruction.

Public reporting burden for this collection of information is estimated to average .58 hours per response, including the time for reviewing instructions, searching existing data sources, gathering and maintaining the data needed, and completing and reviewing the collection of information. Send comments regarding this burden estimate or any other aspect of this collection of information, including suggestions for reducing this burden, to the FAR Secretariat (MVR), Federal Acquisition Policy Division, GSA, Washington, DC 20405.

3. SUBMIT TO			
a. FEDERAL AGENCY'S NAME			
b. STREET ADDRESS			
c. CITY	d. STATE	e. ZIP CODE	

4. APPLICANT			
a. NAME			
b. STREET ADDRESS		c. COUNTY	
d. CITY		e. STATE	e. ZIP CODE

5. TYPE OF ORGANIZATION *(Check one)*

☐ INDIVIDUAL ☐ NON-PROFIT ORGANIZATION

☐ PARTNERSHIP ☐ CORPORATION, INCORPORATED UNDER THE LAWS OF THE STATE OF:

6. ADDRESS TO WHICH SOLICITATIONS ARE TO BE MAILED *(If different than Item 4)*

a. STREET ADDRESS	b. COUNTY	
c. CITY	d. STATE	e. ZIP CODE

7. NAMES OF OFFICERS, OWNERS, OR PARTNERS

a. PRESIDENT	b. VICE PRESIDENT	c. SECRETARY
d. TREASURER	e. OWNERS OR PARTNERS	

8. AFFILIATES OF APPLICANT

NAME	LOCATION	NATURE OF AFFILIATION

9. PERSONS AUTHORIZED TO SIGN OFFERS AND CONTRACTS IN YOUR NAME *(Indicate if agent)*

NAME	OFFICIAL CAPACITY	TELEPHONE NUMBER	
		AREA CODE	NUMBER

10. IDENTIFY EQUIPMENT, SUPPLIES, AND/OR SERVICES ON WHICH YOU DESIRE TO MAKE AN OFFER *(See attached Federal Agency's supplemental listing and instruction, if any)*

11a. SIZE OF BUSINESS *(See defintions on reverse)*

☐ SMALL BUSINESS *(If checked, complete Items 11B and 11C)* ☐ OTHER THAN SMALL BUSINESS

11b. AVERAGE NUMBER OF EMPLOYEES *(Including affiliates)* FOR FOUR PRECEDING CALENDAR QUARTERS

11c. AVERAGE ANNUAL SALES OR RECEIPTS FOR PRECEDING THREE FISCAL YEARS

$

12. TYPE OF OWNERSHIP *(See definitions on reverse)* *(Not applicable for other than small businesses)*

☐ DISADVANTAGED BUSINESS ☐ WOMAN-OWNED BUSINESS

13. TYPE OF BUSINESS *(See definitions on reverse)*

☐ MANUFACTURER OR PRODUCER ☐ CONSTRUCTION CONCERN ☐ SURPLUS DEALER

☐ SERVICE ESTABLISHMENT ☐ RESEARCH AND DEVELOPMENT

14. DUNS NO. *(If available)*

15. HOW LONG IN PRESENT BUSINESS?

16. FLOOR SPACE *(Square Feet/M²)*

a. MANUFACTURING	b. WAREHOUSE

17. NET WORTH

a. DATE	b. AMOUNT
	$

18. SECURITY CLEARANCE *(If applicable, check highest clearance authorized)*

FOR	TOP SECRET	SECRET	CONFIDENTIAL	c. NAMES OF AGENCIES GRANTING SECURITY CLEARANCES	d. DATES GRANTED
a. KEY PERSONNEL					
b. PLANT ONLY					

The information supplied herein *(including all pages attached)* is correct and neither the applicant nor any person *(or concern)* in any connection with the applicant as a principal or officer, so far as is known, is now debarred or otherwise declared ineligible by any agency of the Federal Government from making offers for furnishing materials, supplies, or services to the Government or any agency thereof.

19a. NAME OF PERSON AUTHORIZED TO SIGN *(Type or print)*	20. SIGNATURE	21. DATE SIGNED
19b. TITLE OF PERSON AUTHORIZED TO SIGN *(Type or print)*		

AUTHORIZED FOR LOCAL REPRODUCTION
Previous edition not usable

STANDARD FORM 129 (REV. 12-96)
Prescribed by GSA - FAR (48 CFR) 53.214(e)

INSTRUCTIONS

Persons or concerns wishing to be added to a particular agency's bidder's mailing list for supplies or services shall file this properly completed Solicitation Mailing List Application, together with such other lists as may be attached to this application form, with each procurement office of the Federal agency with which they desire to do business. If a Federal agency has attached a Supplemental Commodity list with instructions, complete the application as instructed. Otherwise, identify in Item 10 the equipment, supplies, and/or services on which you desire to bid. (Provide Federal Supply Class or Standard Industrial Classification codes, if available.) The application shall be submitted and signed by the principal as distinguished from an agent, however constituted.

After placement on the bidder's mailing list of an agency, your failure to respond (submission of bid, or notice in writing, that you are unable to bid on that particular transaction but wish to remain on the active bidder's mailing list for that particular item) to solicitations will be understood by the agency to indicate lack of interest and concurrence in the removal of your name from the purchasing activity's solicitation mailing for items concerned.

SIZE OF BUSINESS DEFINITIONS
(See Item 11A.)

a. Small business concern - A small business concern for the purpose of Government procurement is a concern, including its affiliates, which is independently owned and operated, is not dominant in the field of operation in which it is competing for Government contracts, and can further qualify under the criteria concerning number of employees, average annual receipts, or the other criteria, as prescribed by the Small Business Administration. (See Code of Federal Regulations, Title 13, Part 121, as amended, which contains detailed industry definitions and related procedures.)

b. Affiliates - Business concerns are affiliates of each other when either directly or indirectly (i) one concern controls or has the power to control the other, or (ii) a third party controls or has the power to control both. In determining whether concerns are independently owned and operated and whether or not affiliation exists, consideration is given to all appropriate factors including common ownership, common management, and contractual relationship. (See Items 8 and 11A.)

c. Number of employees - (Item 11B) In connection with the determination of small business status, "number of employees" means the average employment of any concern, including the employees of its domestic and foreign affiliates, based on the number of persons employed on a full-time, part-time, temporary or other basis during each of the pay periods of the preceding 12 months. If a concern has not been in existence for 12 months, "number of employees" means the average employment of such concern and its affiliates during the period that such concern has been in existence based on the number of persons employed during each of the pay periods of the period that such concern has been in business.

TYPE OF OWNERSHIP DEFINITIONS
(See Item 12.)

a. "Disadvantaged business concern" - means any business concern (1) which is at least 51 percent owned by one or more socially and economically disadvantaged individuals; or, in the case of any publicly owned business, at least 51 percent of the stock of which is owned by one or more socially and economically disadvantaged individuals; and (2) whose management and daily business operations are controlled by one or more of such individuals.

b. "Women-owned business" - means a business that is at least 51 percent owned by a woman or women who are U.S. citizens and who also control and operate the business.

TYPE OF BUSINESS DEFINITIONS
(See Item 13.)

a. "Manufacturer or producer" - means a person (or concern) owning, operating, or maintaining a store, warehouse, or other establishment that produces, on the premises, the materials, supplies, articles or equipment of the general character of those listed in Item 10, or in the Federal Agency's Supplemental Commodity List, if attached.

b. "Service establishment" - means a concern (or person) which owns, operates, or maintains any type of business which is principally engaged in the furnishing of nonpersonal services, such as (but not limited to) repairing, cleaning, redecorating, or rental of personal property, including the furnishing of necessary repair parts or other supplies as a part of the services performed.

- COMMERCE BUSINESS DAILY - The Commerce Business Daily, published by the Department of Commerce, contains information concerning proposed procurements, sales, and contract awards, For further information concerning this publication, contact your local Commerce Field Office.

STANDARD FORM 129 (REV. 12-96) **BACK**

BILLING CODE 6820–EP–C

53.301–1094 [Revised]

79. Section 53.301–1094 is revised to read as follows:

53.301–1094 SF 1094, U.S. Tax Exemption Form.

BILLING CODE 6820–EP–P

Book No.

UNITED STATES TAX EXEMPTION FORMS

NSN 7540-01-152-8080

PREVIOUS EDITION NOT USABLE

These Are Accountable Forms

U.S. TAX EXEMPTION FORM	Read the instructions on the reverse side.	DEPARTMENT, AGENCY, OR OFFICE	SERIAL NO.	
ITEM PURCHASED FOR EXCLUSIVE USE OF THE U.S. GOVERNMENT *(Describe)*			QUANTITY	UNIT PRICE ($)
VENDOR FROM WHICH PURCHASED	NAME	A tax exemption form has not previously been issued and the described item(s) has (have) been delivered and invoiced pursuant to:	AMOUNT OF TAX EXCLUDED ($)	
	ADDRESS *(No., Street, City, State, and ZIP Code)*		STATE	
The information on this form is true and correct to the best of my knowledge and belief.		P.O. OR CONTRACT NO.	LOCAL	
PURCHASER'S SIGNATURE, OFFICE TITLE, AND ADDRESS ▶	DATE	DATES	FOR ADMINISTRATIVE OFFICE D.O. SYMBOL NO.	
SIGNATURE AND TITLE OF VENDOR'S REPRESENTATIVE ▶		DATE	VOUCHER NO. DATE:	

STANDARD FORM 1094 (REV. 12-96)
Prescribed by GSA-FAR (48 CFR) 53.229

INSTRUCTIONS

1. This form will be used to establish the Government's exemption or immunity from State or Local taxes whenever no other evidence is available.

2. This form shall NOT be used for:
(a) Purchases of quarters or subsistence made by employees in travel status.
(b) Expenses incident to use of a privately owned motor vehicle for which a mileage allowance has been authorized, or
(c) Merchandise purchased which is subject only to Federal Tax.

3. If the spaces provided on the face of this form are inadequate, attach a separate statement containing the required information.

4. If both State and local taxes are involved, use a separate form for each tax. The form will be provided to the vendor when the prices exclude State or local tax.

5. The serial number of each form prepared will be shown on the payment voucher.

THE FRAUDULENT USE OF THIS FORM FOR THE PURPOSE OF OBTAINING EXCEPTION FROM OR ADJUSTMENT OF TAXES IS PROHIBITED.

STANDARD FORM 1094 (REV.12-96) **BACK**

In case this book of United States Tax Exemption Forms is lost, finder will please put band or string around cover and mail to:

GENERAL SERVICES ADMINISTRATION
FEDERAL SUPPLY SERVICE
GENERAL PRODUCTS COMMODITY CENTER
ATTN: 7FXM
819 TAYLOR STREET
FORT WORTH TX 76102

BILLING CODE 6820–EP–C

53.301–1094A [Revised]

80. Section 53.301–1094A is revised to read as follows:

§ 53.301–1094A SF 1094A, Tax Exemption Forms Accountability Record.

BILLING CODE 6820–EP–P

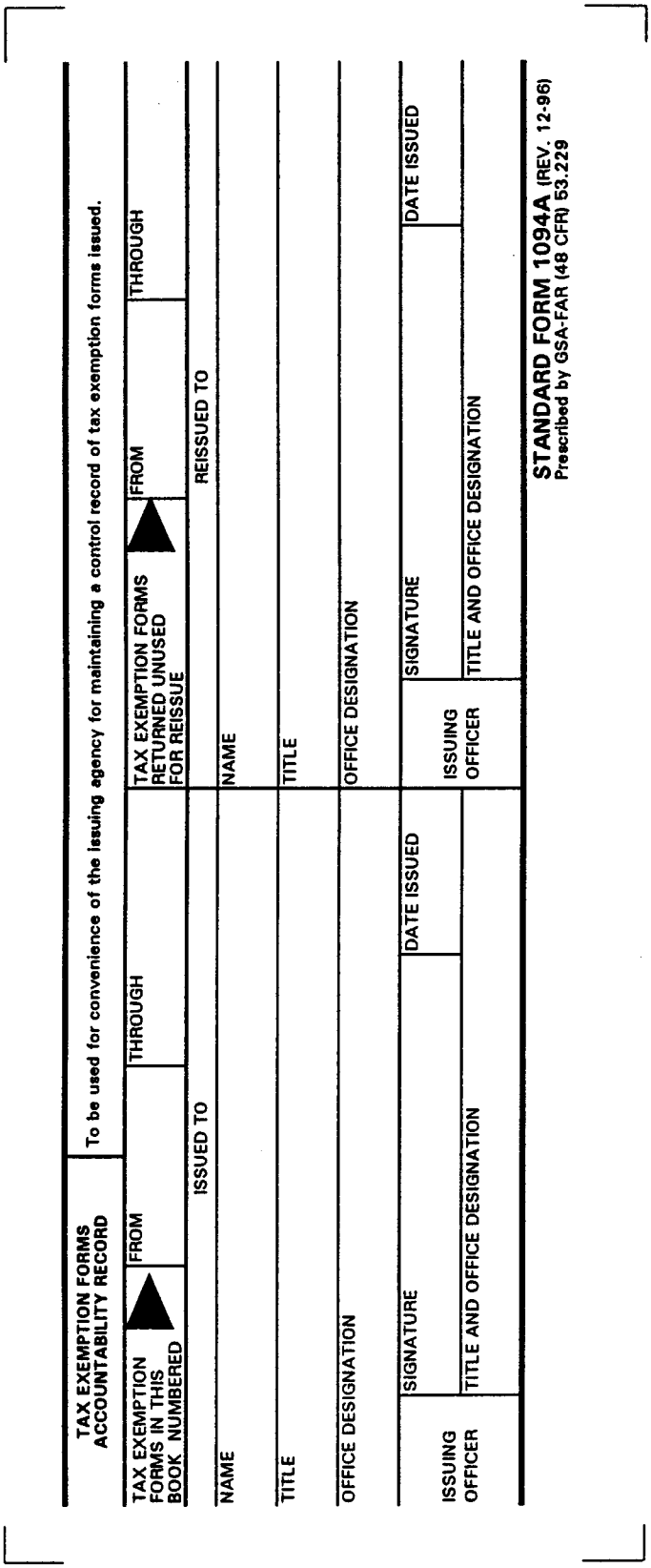

TAX EXEMPTION FORMS ACCOUNTABILITY RECORD

To be used for convenience of the issuing agency for maintaining a control record of tax exemption forms issued.

TAX EXEMPTION FORMS IN THIS BOOK NUMBERED	FROM	THROUGH	TAX EXEMPTION FORMS RETURNED UNUSED FOR REISSUE	FROM	THROUGH
ISSUED TO			REISSUED TO		
NAME			NAME		
TITLE			TITLE		
OFFICE DESIGNATION			OFFICE DESIGNATION		
ISSUING OFFICER	SIGNATURE	DATE ISSUED	ISSUING OFFICER	SIGNATURE	DATE ISSUED
	TITLE AND OFFICE DESIGNATION			TITLE AND OFFICE DESIGNATION	

STANDARD FORM 1094A (REV. 12-96)
Prescribed by GSA-FAR (48 CFR) 53.229

FORM		Mark "X" in appropriate column to indicate type of tax ▶		TAX EXCLUDED *(Amount $)*	STATE	LOCAL	TRANSACTION REFERENCE
NO.	DATE	VENDOR NAME AND ADDRESS	ITEM PURCHASED				
							Voucher No.:
							Voucher Date:
							PO/Cont. No.:
							Voucher No.:
							Voucher Date:
							PO/Cont. No.:
							Voucher No.:
							Voucher Date:
							PO/Cont. No.:
							Voucher No.:
							Voucher Date:
							PO/Cont. No.:

STANDARD FORM 1094A (REV. 12-96) **BACK**
Prescribed by GSA-FAR (48 CFR) 53.229

BILLING CODE 6820–EP–C

53.301–1423 [Revised]

81. Section 53.301–1423 is revised to read as follows:

53.301–1423 SF 1423, Inventory Verification Survey.

BILLING CODE 6820–EP–P

INVENTORY VERIFICATION SURVEY
(See FAR 45.606-3)

DATE

OMB No.: 9000-0015
Expires: 05/31/98

Public reporting burden for this collection of information is estimated to average 1 hour per response, including the time for reviewing instructions, searching existing data sources, gathering and maintaining the data needed, and completing and reviewing the collection of information. Send comments regarding this burden estimate or any other aspect of this collection of information, including suggestions for reducing this burden, to the FAR Secretariat (MVR), Federal Acquisition Policy Division, GSA, Washington, DC 20405.

SECTION I - GENERAL

1. FROM: *(Include ZIP Code)*

2. CONTRACT NUMBER

3. TO: *(Include ZIP Code)*

4. CONTRACT/SUBCONTRACTOR

5. SCHEDULES OF INVENTORY TO BE INSPECTED AND VERIFIED

SF 1426 pages _____ through _____ $ _____
SF 1428 pages _____ through _____ $ _____
SF 1430 pages _____ through _____ $ _____
SF 1432 pages _____ through _____ $ _____
SF 1434 pages _____ through _____ $ _____

SECTION II - TECHNICAL VERIFICATION

	YES	NO		YES	NO
6. IS PROPERTY LISTED ON THE INVENTORY SCHEDULES ON HAND AND IN THE QUANTITIES INDICATED?		*	12. ARE THE WEIGHTS OF THE ITEMS RECOMMENDED AS SCRAP APPROXIMATELY CORRECT? IF WEIGHTS ARE NOT SHOWN, GIVE ESTIMATE OF WEIGHT BY BASIC MATERIAL CONTENT: _____		*
7. IS THE PROPERTY CORRECTLY DESCRIBED ON THE INVENTORY SCHEDULES?		*	13. DO THE ITEMS APPEAR TO HAVE COMMERCIAL VALUE OTHER THAN SCRAP?		*
8. IS THE PROPERTY SEGREGATED OR ADEQUATELY PROTECTED?		*	14. ARE THE ITEMS AGENCY-PECULIAR?	*	
9. IS THE PROPERTY PROPERLY TAGGED?		*	15. DO ANY ITEMS REQUIRE SPECIAL PROCESSING *(Fire arms, drugs, hazardous or sensitive items, or precious metals, etc.)*?	*	
10. ARE THE CONDITION CODES ACCURATE?		*	16. ARE COMMON ITEMS INCLUDED ON THE INVENTORY SCHEDULE?	*	
11. ARE THE ITEMS LISTED ON SF 1432 CORRECTLY CATEGORIZED AS SPECIAL TOOLING OR SPECIAL TEST EQUIPMENT?		*			

SECTION III - TERMINATION INVENTORY

COMPLETION OF THIS SECTION ☐ IS ☐ IS NOT REQUIRED *(Requester, check one)*

	YES	NO		YES	NO
17. DID WORK STOP PROMPTLY UPON RECEIPT OF THE TERMINATION NOTICE? DATE TO NOTICE:		*	20. DOES THE INVENTORY INCLUDE REJECTS? IF YES, EXPLAIN SPECIFIC LINE ITEM ENTRIES. OBTAIN FROM CONTRACTOR ESTIMATED COST OF REWORKING REJECTS ON SPECIFIC LINE ITEM BASIS.	*	
18. DO THE QUANTITIES OF MATERIAL EXCEED THE AMOUNTS THAT WOULD HAVE BEEN REQUIRED TO COMPLETE THE TERMINATED PORTION OF THE CONTRACT?	*		21a. HAVE COMPLETED ARTICLES BEEN INSPECTED AS TO QUALITY AND CONFORMANCE TO SPECIFICATIONS?		*
CAN THE ITEMS OF TERMINATION INVENTORY BE USED ON THE CONTINUING PORTION OF THE CONTRACT?	*		b. DO THE COMPLETED ITEMS INSPECTED CONFORM TO CONTRACT SPECIFICATIONS?		*
19. ARE ALL ITEMS AND QUANTITIES ALLOCABLE TO THE TERMINATION PORTION OF THIS CONTRACT OR ORDER?		*	c. DO OTHER THAN COMPLETED ITEMS CONFORM WITH TECHNICAL REQUIREMENTS OF THE CONTRACT OR ORDER?		*

22. REQUESTING OFFICE REMARKS *(Where the answer to any question is placed in a block containing an asterisk (*) detailed comments of the verifier shall be included on the reverse of this form and identified by section and item number.)*

23. SIGNATURE OF REQUESTER

INVENTORY VERIFICATION
The above information is based on a physical Verification of Inventory listed under Item 5.

24. NAME AND TITLE	25. SIGNATURE OF VERIFIER	26. DATE

AUTHORIZED FOR LOCAL REPRODUCTION
Previous edition not usable

STANDARD FORM 1423 (REV. 12-96)
Prescribed by GSA-FAR (48 CFR) 53.245(c)

BILLING CODE 6820–EP–C

53.301–1426 [Revised]

82. Section 53.301–1426 is revised to read as follows:

53.301–1426 SF 1426, Inventory Schedule A (Metals in Mill Product Form).

BILLING CODE 6820–EP–P

INVENTORY SCHEDULE A
(METALS IN MILL PRODUCT FORM)
(See FAR Section 45.606 for instructions)

TYPE: ☐ TERMINATION ☐ NONTERMINATION ☐ PARTIAL ☐ FINAL

TYPE OF CONTRACT | DATE

PROPERTY CLASSIFICATION | PAGE | NO. OF PAGES

OMB No.: 9000-0015
Expires: 05/31/98

Public reporting burden for this collection of information is estimated to average 1 hour per response, including the time for reviewing instructions, searching existing data sources, gathering and maintaining the data needed, and completing and reviewing the collection of information. Send comments regarding this burden estimate or any other aspect of this collection of information, including suggestions for reducing this burden, to the FAR Secretariat (MVR), Federal Acquisition Policy Division, GSA, Washington, DC 20405.

THIS SCHEDULE APPLIES TO *(Check one)*

☐ A PRIME CONTRACT WITH THE GOVERNMENT ☐ SUBCONTRACT(S) OR PURCHASE ORDER(S)

GOVERNMENT PRIME CONTRACT NO. | SUBCONTRACT OR P.O. NO. | REFERENCE NO.

COMPANY PREPARING AND SUBMITTING SCHEDULE

STREET ADDRESS

CONTRACTOR WHO SENT NOTICE OF TERMINATION

NAME | STREET ADDRESS

CITY | STATE | ZIP CODE

CITY | STATE | ZIP CODE

LOCATION OF MATERIAL

PRODUCT COVERED BY CONTRACT OR ORDER

FOR USE OF CONTRACTING AGENCY ONLY	ITEM NO.	DESCRIPTION: FORM, SHAPE, ROLLING TREATMENT (When applicable, type of edge. Example: HR coiled strip, CR flat sheets box rod, tubing in straight length, etc.)	HEAT TREATMENT, TEMPER, HARDNESS FINISH, ETC. (Example: Annealed and pickled, 1/2 hard, polished, etc.)	SPECIFICATIONS, AND ALLOY OR OTHER VARIABLE DESIGNATION IN THE SPECIFICATION (Example: QQ-T-951-D B16-42 Alloy 7 Grade B)	DIMENSIONS: THICKNESS (Wall for tubing, class for pipe, type for copper water-tube)	WIDTH (O.D. for tube diameter of rod, size for pipe, manufacturer's dia no. for extruded shapes)	LENGTH	CONDITION (USE code)	QUANTITY	UNIT OF MEASURE	COST: UNIT	COST: TOTAL	CONTRACTOR'S OFFER	FOR USE OF CONTRACTING AGENCY ONLY
		(a)	(b)	(b1)	(b2)	(b3)	(b4)	FT/M (b5)	IN/CM (b5)	(c)	(d)	(d1)	(e)	(f)	(g)	

INVENTORY SCHEDULE

This inventory Schedule has been examined, and in the exercise of the signer's best judgment and to the best of the signer's knowledge, based upon information believed by the signer to be reliable, said Schedule has been prepared in accordance with applicable instructions; the inventory described is allocable to the designated contract and is located at the places specified; if the property reported is termination inventory, the quantities are not in excess of the reasonable quantitative requirements of the terminated portion of the contract; this Schedule does not include any items reasonably usable, without loss to the Contractor, on its other work; and the costs shown on this Schedule are in accordance with the Contractor's records and books of account.

The Contractor agrees to inform the Contracting Officer of any substantial change in the status of the inventory shown in this Schedule between the date hereof and the final disposition of such inventory.

Subject to any authorized prior disposition, title to the inventory listed in this Schedule is hereby tendered to the Government and is warranted to be free and clear of all liens and encumbrances.

NAME OF CONTRACTOR | BY *(Signature of Authorized Official)* | TITLE | DATE

NAME OF SUPERVISORY ACCOUNTING OFFICIAL | TITLE

AUTHORIZED FOR LOCAL REPRODUCTION
Previous edition not usable

STANDARD FORM 1426 (REV. 12-96)
Prescribed by GSA - FAR (48 CFR) 53.245(f)

BILLING CODE 6820–EP–C

53.301–1428 [Revised]

83. Section 53.301–1428 is revised to read as follows:

53.301–1428 SF 1428, Inventory Schedule B.

BILLING CODE 6820–EP–P

INVENTORY SCHEDULE B
(See FAR Section 45.606 for instructions)

☐ PARTIAL ☐ FINAL

TYPE: ☐ TERMINATION ☐ NONTERMINATION

TYPE OF CONTRACT

DATE

OMB No.: 9000-0015
Expires: 05/31/98

Public reporting burden for this collection of information is estimated to average 1 hour per response, including the time for reviewing instructions, searching existing data sources, gathering and maintaining the data needed, and completing and reviewing the collection of information. Send comments regarding this burden estimate or any other aspect of this collection of information, including suggestions for reducing this burden, to the FAR Secretariat (MVR), Federal Acquisition Policy Division, GSA, Washington, DC 20405.

TYPE OF INVENTORY

☐ RAW MATERIALS (Other than metals) ☐ PURCHASED PARTS ☐ FINISHED COMPONENTS

☐ FINISHED PRODUCT ☐ PLANT EQUIPMENT ☐ MISCELLANEOUS

THIS SCHEDULE APPLIES TO *(Check one)*

☐ A PRIME CONTRACT WITH THE GOVERNMENT ☐ SUBCONTRACT OR PURCHASE ORDER

GOVERNMENT PRIME CONTRACT NO. | SUBCONTRACT OR P.O. NO. | REFERENCE NO.

CONTRACTOR WHO SENT NOTICE OF TERMINATION

NAME

ADDRESS *(Include ZIP Code)*

PRODUCT COVERED BY CONTRACT OR ORDER

PROPERTY CLASSIFICATION | PAGE NO. | NO. OF PAGES

COMPANY PREPARING AND SUBMITTING SCHEDULE

STREET ADDRESS

CITY AND STATE *(Include ZIP Code)*

LOCATION OF MATERIAL

FOR USE OF CONTRACTING AGENCY ONLY	ITEM NO. (a)	DESCRIPTION: ITEM DESCRIPTION (b)	GOVERNMENT PART OR DRAWING NUMBER AND REVISION NUMBER (b1)	TYPE OF PACKING (Bulk, bbls., crates, etc.) (b2)	CONDITION (Use code) (c)	QUANTITY (d)	UNIT OF MEASURE (d1)	COST (For finished product, show contract price instead of cost): UNIT (e)	TOTAL (f)	CONTRACTOR'S OFFER (g)	FOR USE OF CONTRACTING AGENCY ONLY

INVENTORY SCHEDULE

This inventory Schedule has been examined, and in the exercise of the signer's best judgment and to the best of the signer's knowledge, based upon information believed by the signer to be reliable, said Schedule has been prepared in accordance with applicable instructions; the inventory described is allocable to the designated contract and is located at the places specified; if the property reported is termination inventory, the quantities are not in excess of the reasonable quantitative requirements of the terminated portion of the contract; this Schedule does not include any items reasonably usable, without loss to the Contractor, on its other work; and the costs shown on this Schedule are in accordance with the Contractor's records and books of account.

The Contractor agrees to inform the Contracting Officer of any substantial change in the status of the inventory shown in this Schedule between the date hereof and the final disposition of such inventory.

Subject to any authorized prior disposition, title to the inventory listed in this Schedule is hereby tendered to the Government and is warranted to be free and clear of all liens and encumbrances.

NAME OF CONTRACTOR | BY *(Signature of Authorized Official)* | TITLE | DATE

NAME OF SUPERVISORY ACCOUNTING OFFICIAL | TITLE

AUTHORIZED FOR LOCAL REPRODUCTION
Previous edition not usable

STANDARD FORM 1428 (REV. 12-96)
Prescribed by GSA-FAR (48 CFR) 53.245(g)

BILLING CODE 6820–EP–C

53.301–1430 [Revised]

84. Section 53.301–1430 is revised to read as follows:

53.301–1430 SF 1430, Inventory Schedule C (Work-in-Process).

BILLING CODE 6820–EP–P

INVENTORY SCHEDULE C
(WORK-IN-PROCESS)
(See FAR Section 45.606 for instructions)

☐ PARTIAL ☐ FINAL

TYPE: ☐ TERMINATION ☐ NONTERMINATION

TYPE OF CONTRACT

DATE

OMB No.: 9000-0015
Expires: 05/31/98

PAGE NO. | NO. OF PAGES

Public reporting burden for this collection of information is estimated to average 1 hour per response, including the time for reviewing instructions, searching existing data sources, gathering and maintaining the data needed, and completing and reviewing the collection of information. Send comments regarding this burden estimate or any other aspect of this collection of information, including suggestions for reducing this burden, to the FAR Secretariat (MVR), Federal Acquisition Policy Division, GSA, Washington, DC 20405

THIS SCHEDULE APPLIES TO *(Check one)*

☐ A PRIME CONTRACT WITH THE GOVERNMENT ☐ SUBCONTRACT(S) OR PURCHASE ORDER(S)

GOVERNMENT PRIME CONTRACT NO. | SUBCONTRACT OR P.O. NO. | REFERENCE NO.

CONTRACTOR WHO SENT NOTICE OF TERMINATION

NAME

ADDRESS *(Include ZIP Code)*

PRODUCT COVERED BY CONTRACT OR ORDER

COMPANY PREPARING AND SUBMITTING SCHEDULE

STREET ADDRESS

CITY AND STATE *(Include ZIP Code)*

LOCATION OF MATERIAL

FOR USE OF CONTRACTING AGENCY ONLY	ITEM NO. (a)	DESCRIPTION: ITEM DESCRIPTION (b)	DESCRIPTION: ESTIMATED WEIGHT (b1)	CONDITION (Use code) (c)	QUANTITY (d)	UNIT OF MEASURE (d1)	COST: UNIT (e)	COST: TOTAL (f)	CONTRACTOR'S OFFER (g)	FOR USE OF CONTRACTING AGENCY ONLY

INVENTORY SCHEDULE

This inventory Schedule has been examined, and in the exercise of the signer's best judgment and to the best of the signer's knowledge, based upon information believed by the signer to be reliable, said Schedule has been prepared in accordance with applicable instructions; the inventory described is allocable to the designated contract and is located at the places specified; if the property reported is termination inventory, the quantities are not in excess of the reasonable quantitative requirements of the terminated portion of the contract; this Schedule does not include any items reasonably usable, without loss to the Contractor, on its other work; and the costs shown on this Schedule are in accordance with the Contractor's records and books of account.

The Contractor agrees to inform the Contracting Officer of any substantial change in the status of the inventory shown in this Schedule between the date hereof and the final disposition of such inventory.

Subject to any authorized prior disposition, title to the inventory listed in this Schedule is hereby tendered to the Government and is warranted to be free and clear of all liens and encumbrances.

NAME OF CONTRACTOR | BY *(Signature of Authorized Official)* | TITLE | DATE

NAME OF SUPERVISORY ACCOUNTING OFFICIAL | TITLE

AUTHORIZED FOR LOCAL REPRODUCTION
Previous edition is not usable

STANDARD FORM 1430 (REV. 12-96)
Prescribed by GSA - FAR (48 CFR) 53.245(h)

BILLING CODE 6820–EP–C

53.301–1432 [Revised]

85. Section 53.301–1432 is revised to read as follows:

53.301–1432 SF 1432, Inventory Schedule D (Special Tooling and Special Test Equipment).

BILLING CODE 6820–EP–P

INVENTORY SCHEDULE D
(SPECIAL TOOLING AND SPECIAL TEST EQUIPMENT)
(See FAR Section 45.606 for instructions)

☐ PARTIAL ☐ FINAL

TYPE: ☐ TERMINATION ☐ NONTERMINATION

TYPE OF CONTRACT | DATE

OMB No.: 9000-0015
Expires: 05/31/98

PROPERTY CLASSIFICATION | PAGE NO. | NO. OF PAGES

Public reporting burden for this collection of information is estimated to average 1 hour per response, including the time for reviewing instructions, searching existing data sources, gathering and maintaining the data needed, and completing and reviewing the collection of information. Send comments regarding this burden estimate or any other aspect of this collection of information, including suggestions for reducing this burden, to the FAR Secretariat (MVR), Federal Acquisition Policy Division, GSA, Washington, DC 2040.

THIS SCHEDULE APPLIES TO *(Check one)*
☐ A PRIME CONTRACT WITH THE GOVERNMENT ☐ SUBCONTRACT(S) OR PURCHASE ORDER(S)

GOVERNMENT PRIME CONTRACT NO. | SUBCONTRACT OR P.O. NO. | REFERENCE NO.

COMPANY PREPARING AND SUBMITTING SCHEDULE

STREET ADDRESS

CONTRACTOR WHO SENT NOTICE OF TERMINATION

NAME

CITY AND STATE *(Include ZIP Code)*

ADDRESS *(Include ZIP Code)*

LOCATION OF MATERIAL

PRODUCT COVERED BY CONTRACT OR ORDER

FOR USE OF CONTRACTING AGENCY ONLY	ITEM NO. (a)	ITEM DESCRIPTION (b)	CONDITION (Use code) (c)	QUANTITY (d)	COST: UNIT (e)	COST: TOTAL (f)	APPLICABLE TO THIS CONTRACT: TO ENTIRE CONTRACT (f1)	APPLICABLE TO THIS CONTRACT: TO PORTION NOT TO BE COMPLETED (f2)	CONTRACTOR'S OFFER (g)	FOR USE OF CONTRACTING AGENCY ONLY

INVENTORY SCHEDULE

This inventory Schedule has been examined, and in the exercise of the signer's best judgment and to the best of the signer's knowledge, based upon information believed by the signer to be reliable, said Schedule has been prepared in accordance with applicable instructions; the inventory described is allocable to the designated contract and is located at the places specified; if the property reported is termination inventory, the quantities are not in excess of the reasonable quantitative requirements of the terminated portion of the contract; this Schedule does not include any items reasonably usable, without loss to the Contractor, on its other work; and the costs shown on this Schedule are in accordance with the Contractor's records and books of account.

The Contractor agrees to inform the Contracting Officer of any substantial change in the status of the inventory shown in this Schedule between the date hereof and the final disposition of such inventory.

Subject to any authorized prior disposition, title to the inventory listed in this Schedule is hereby tendered to the Government and is warranted to be free and clear of all liens and encumbrances.

NAME OF CONTRACTOR | BY *(Signature of Authorized Official)* | TITLE | DATE

NAME OF SUPERVISORY ACCOUNTING OFFICIAL | TITLE

AUTHORIZED FOR LOCAL REPRODUCTION
Previous edition is not usable

STANDARD FORM 1432 (REV. 12-96)
Prescribed by GSA - FAR (48 CFR) 53.245(i)

BILLING CODE 6820–EP–C

53.301–1434 [Revised]

86. Section 53.301–1434 is revised to read as follows:

53.301–1434 SF 1434, Termination Inventory

Schedule E (Short Form For Use With SF 1438 Only).

BILLING CODE 6820–EP–P

TERMINATION INVENTORY SCHEDULE E
(SHORT FORM FOR USE WITH SF 1438 ONLY)
(See FAR Section 45.606 for instructions)

☐ PARTIAL ☐ FINAL

DATE	PAGE NO.	NO. OF PAGES	OMB No.: 9000-0015 Expires: 05/31/98

Public reporting burden for this collection of information is estimated to average 1 hour per response, including the time for reviewing instructions, searching existing data sources, gathering and maintaining the data needed, and completing and reviewing the collection of information. Send comments regarding this burden estimate or any other aspect of this collection of information, including suggestions for reducing this burden, to the FAR Secretariat (MVR), Federal Acquisition Policy Division, GSA, Washington, DC 20405.

THIS SCHEDULE APPLIES TO *(Check one)*

☐ A PRIME CONTRACT WITH THE GOVERNMENT ☐ SUBCONTRACT(S) OR PURCHASE ORDER(S)

GOVERNMENT PRIME CONTRACT NO.	SUBCONTRACT OR P.O. NO.	REFERENCE NO.

CONTRACTOR WHO SENT NOTICE OF TERMINATION

NAME

ADDRESS *(Include ZIP Code)*

PRODUCT COVERED BY CONTRACT OR ORDER

COMPANY PREPARING AND SUBMITTING SCHEDULE

STREET ADDRESS

CITY AND STATE *(Include ZIP Code)*

LOCATION OF MATERIAL

FOR USE OF CONTRACTING AGENCY ONLY	ITEM NO. (a)	DESCRIPTION: ITEM DESCRIPTION (b)	GOVERNMENT PART OR DRAWING NUMBER AND REVISION NUMBER (b1)	TYPE OF PACKING (Bulk, bbls., crates, etc.) (b2)	CONDITION (Use code) (c)	QUANTITY (d)	UNIT OF MEASURE (d1)	COST (For finished product, show contract price instead of cost): UNIT (e)	TOTAL (f)	CONTRACTOR'S OFFER (g)	FOR USE OF CONTRACTING AGENCY ONLY

TERMINATION INVENTORY

This inventory Schedule has been examined, and in the exercise of the signer's best judgment and to the best of the signer's knowledge, based upon information believed by the signer to be reliable, said Schedule has been prepared in accordance with applicable instructions; the inventory described is allocable to the designated contract and is located at the places specified; if the property reported is termination inventory, the quantities are not in excess of the reasonable quantitative requirements of the terminated portion of the contract; this Schedule does not include any items reasonably usable, without loss to the Contractor, on its other work; and the costs shown on this Schedule are in accordance with the Contractor's records and books of account.

The Contractor agrees to inform the Contracting Officer of any substantial change in the status of the inventory shown in this Schedule between the date hereof and the final disposition of such inventory.

Subject to any authorized prior disposition, title to the inventory listed in this Schedule is hereby tendered to the Government and is warranted to be free and clear of all liens and encumbrances.

NAME OF CONTRACTOR	BY *(Signature of Authorized Official)*	TITLE	DATE

NAME OF SUPERVISORY ACCOUNTING OFFICIAL	TITLE

AUTHORIZED FOR LOCAL REPRODUCTION
Previous edition is not usable

STANDARD FORM 1434 (REV. 12-96)
Prescribed by GSA - FAR (48 CFR) 53.245(j)

BILLING CODE 6820–EP–C

53.301–1445 [Revised]

87. Section 53.301–1445 is revised to read as follows:

53.301–1445 SF 1445, Labor Standards Interview.

BILLING CODE 6820–EP–P

LABOR STANDARDS INTERVIEW

CONTRACT NUMBER			EMPLOYEE INFORMATION		
			LAST NAME	FIRST NAME	MI
NAME OF PRIME CONTRACTOR			STREET ADDRESS		
NAME OF EMPLOYER			CITY	STATE	ZIP CODE
SUPERVISOR'S NAME					
LAST NAME	FIRST NAME	MI	WORK CLASSIFICATION	WAGE RATE	

ACTION	CHECK BELOW YES	NO
Do you work over 8 hours per day?		
Do you work over 40 hours per week?		
Are you paid at least time and a half for overtime hours?		
Are you receiving any cash payments for fringe benefits required by the posted wage determination decision?		

WHAT DEDUCTIONS OTHER THAN TAXES AND SOCIAL SECURITY ARE MADE FROM YOUR PAY?

	TOOLS YOU USE	
HOW MANY HOURS DID YOU WORK ON YOUR LAST WORK DAY BEFORE THIS INTERVIEW?		
DATE OF LAST WORK DAY BEFORE INTERVIEW *(YYMMDD)*		
DATE YOU BEGAN WORK ON THIS PROJECT *(YYMMDD)*		

THE ABOVE IS CORRECT TO THE BEST OF MY KNOWLEDGE

EMPLOYEE'S SIGNATURE			DATE *(YYMMDD)*
INTERVIEWER	SIGNATURE	TYPED OR PRINTED NAME	DATE *(YYMMDD)*

INTERVIEWER'S COMMENTS

WORK EMPLOYEE WAS DOING WHEN INTERVIEWED	ACTION *(If explanation is needed, use comments section)*	YES	NO
	IS EMPLOYEE PROPERLY CLASSIFIED AND PAID?		
	ARE WAGE RATES AND POSTERS DISPLAYED?		

FOR USE BY PAYROLL CHECKER

IS ABOVE INFORMATION IN AGREEMENT WITH PAYROLL DATA?

☐ YES ☐ NO

COMMENTS

CHECKER				
LAST NAME	FIRST NAME	MI	JOB TITLE	
SIGNATURE				DATE *(YYMMDD)*

AUTHORIZED FOR LOCAL REPRODUCTION
Previous edition not usable

STANDARD FORM 1445 (REV. 12-96)
Prescribed by GSA - FAR (48 CFR) 53.222(g)

[FR Doc. 96–33206 Filed 12–31–96; 8:45 am]

BILLING CODE 6820–EP–C

48 CFR Part 2

[FAC 90–45; FAR Case 96–323; Item III]

RIN 9000–AH45

Federal Acquisition Regulation; Humanitarian Operations

AGENCIES: Department of Defense (DOD), General Services Administration (GSA), and National Aeronautics and Space Administration (NASA).

ACTION: Final rule.

SUMMARY: The Civilian Agency Acquisition Council and the Defense Acquisition Regulations Council have agreed on a final rule to amend the Federal Acquisition Regulation (FAR) to implement Section 807 of the Fiscal Year 1997 Defense Authorization Act (Public Law 104–201). Section 807 increases the ''simplified acquisition threshold'' for a humanitarian or peacekeeping operation. This regulatory action was not subject to Office of Management and Budget review under Executive Order 12866, dated September 30, 1993. This is not a major rule under 5 U.S.C. 804.

EFFECTIVE DATE: January 1, 1997.

FOR FURTHER INFORMATION CONTACT: Mr. Paul L. Linfield at (202) 501–1757 in reference to this FAR case. For general information, contact the FAR Secretariat, Room 4035, GS Building, Washington, DC 20405 (202) 501–4755. Please cite FAC 90–45, FAR case 96–323.

SUPPLEMENTARY INFORMATION:

A. Background

This final rule amends FAR Part 2 to implement Section 807 of the Fiscal Year 1997 Defense Authorization Act (Public Law 104–201). Section 807 amends 10 U.S.C. 2302(7) and 41 U.S.C. 259(d) to provide for a simplified acquisition threshold for humanitarian or peacekeeping operations in an amount equal to two times that specified in section 4 of the Office of Federal Procurement Policy Act (41 U.S.C. 403). Accordingly, the definition of ''simplified acquisition threshold'' at FAR 2.101 is amended to reflect an amount of $200,000 for contracts to be awarded and performed, or purchases to be made, outside the United States in support of a humanitarian or peacekeeping operation.

B. Regulatory Flexibility Act

This final rule does not constitute a significant FAR revision within the meaning of FAR 1.501 and Public Law 98–577, and publication for public comments is not required. However, comments from small entities concerning the affected FAR subpart will be considered in accordance with 5 U.S.C. 610. Such comments must be submitted separately and cite 5 U.S.C. 601, *et seq.* (FAC 90–45, FAR case 96–323), in correspondence.

C. Paperwork Reduction Act

The Paperwork Reduction Act does not apply because the changes to the FAR do not impose recordkeeping or information collection requirements, or collections of information from offerors, contractors, or members of the public which require the approval of the Office of Management and Budget under 44 U.S.C. 3501, *et seq.*

List of Subjects in 48 CFR Part 2

Government procurement.

Dated: December 24, 1996.

Edward C. Loeb,

Director, Federal Acquisition Policy Division.

Therefore, 48 CFR Part 2 is amended as set forth below:

PART 2—DEFINITIONS OF WORDS AND TERMS

1. The authority citation for 48 CFR Part 2 continues to read as follows:

Authority: 40 U.S.C. 486(c); 10 U.S.C. chapter 137; and 42 U.S.C. 2473(c).

2. Section 2.101 is amended by revising the definition for ''Simplified acquisition threshold'' to read as follows:

2.101 Definitions.

* * * * *

Simplified acquisition threshold means $100,000, except that in the case of any contract to be awarded and performed, or purchase to be made, outside the United States in support of a contingency operation (as defined in 10 U.S.C. 101(a)(13)) or a humanitarian or peacekeeping operation (as defined in 10 U.S.C. 2302(7) and 41 U.S.C. 259(d)), the term means $200,000.

* * * * *

[FR Doc. 96–33207 Filed 12–31–96; 8:45 am]

BILLING CODE 6820–EP–P

48 CFR Parts 6, 15, and 24

[FAC 90–45; FAR Case 96–326; Item IV]

RIN 9000–AH46

Federal Acquisition Regulation; Freedom of Information Act

AGENCIES: Department of Defense (DOD), General Services Administration (GSA), and National Aeronautics and Space Administration (NASA).

ACTION: Final rule.

SUMMARY: The Civilian Agency Acquisition Council and the Defense Acquisition Regulations Council have agreed on a final rule to amend the Federal Acquisition Regulation (FAR) to implement Section 821 of the Fiscal Year 1997 Defense Authorization Act (Public Law 104–201). Section 821 prohibits, with certain exceptions, Government release of competitive proposals under the Freedom of Information Act. This regulatory action was not subject to Office of Management and Budget review under Executive Order 12866, dated September 30, 1993. This is not a major rule under 5 U.S.C. 804.

EFFECTIVE DATE: January 1, 1997.

FOR FURTHER INFORMATION CONTACT: Mr. Jack O'Neill at (202) 501–3856 in reference to this FAR case. For general information, contact the FAR Secretariat, Room 4035, GS Building, Washington, DC 20405 (202) 501–4755. Please cite FAC 90–45, FAR case 96–326.

SUPPLEMENTARY INFORMATION:

A. Background

This final rule amends FAR Subpart 24.2, Freedom of Information Act (5 U.S.C. 552), to add a new section 24.202, Prohibitions. This new section implements section 821 of Public Law 104–201 by prohibiting, with certain exceptions, the release of proposals submitted in response to competitive solicitations. The rule also amends FAR sections 6.305 and 15.1006 to provide appropriate cross-references. (Note: The change to 15.804–5 that implements this rule in part is made under FAR case 96–306.)

B. Regulatory Flexibility Act

This final rule does not constitute a significant FAR revision within the meaning of FAR 1.501 and Public Law 98–577, and publication for public comments is not required. However, comments from small entities concerning the affected FAR subpart will be considered in accordance with 5 U.S.C. 610. Such comments must be submitted separately and cite 5 U.S.C. 601, *et seq.* (FAC 90–45, FAR case 96–326), in correspondence.

C. Paperwork Reduction Act

The Paperwork Reduction Act does not apply because the changes to the FAR do not impose recordkeeping or information collection requirements, or collections of information from offerors, contractors, or members of the public which require the approval of the Office

of Management and Budget under 44 U.S.C. 3501, *et seq.*

List of Subjects in 48 CFR Parts 6, 15, and 24

Government procurement.

Dated: December 24, 1996.

Edward C. Loeb,

Director, Federal Acquisition Policy Division.

Therefore, 48 CFR Parts 6, 15, and 24 are amended as set forth below:

1. The authority citation for 48 CFR Parts 6, 15, and 24 continues to read as follows:

Authority: 40 U.S.C. 486(c); 10 U.S.C. chapter 137; and 42 U.S.C. 2473(c).

PART 6—COMPETITION REQUIREMENTS

2. Section 6.305 is amended in paragraph (1) by revising the third sentence to read as follows:

6.305 Availability of the justification.

(1) * * * Contracting officers shall also be guided by the exemptions to disclosure of information contained in the Freedom of Information Act (5 U.S.C. 552) and the prohibitions against disclosure in 24.202 in determining whether other data should be removed.

* * * * *

PART 15—CONTRACTING BY NEGOTIATION

3. Section 15.1006 is amended in paragraph (e) introductory text by revising the second sentence to read as follows:

15.1006 Postaward debriefing of offerors.

* * * * *

(e) * * * Moreover, debriefing shall not reveal any information prohibited from disclosure by 24.202 or exempt from release under the Freedom of Information Act, including—

* * * * *

PART 24—PROTECTION OF PRIVACY AND FREEDOM OF INFORMATION

24.202 [Redesignated as 24.203]

4. Section 24.202 is redesignated as 24.203 and a new section 24.202 is added to read as follows:

24.202 Prohibitions.

(a) A proposal in the possession or control of the Government, submitted in response to a competitive solicitation, shall not be made available to any person under the Freedom of Information Act. This prohibition does not apply to a proposal, or any part of a proposal, that is—

(1) In the possession or control of NASA or the Coast Guard; or

(2) Set forth or incorporated by reference in a contract between the Government and the contractor that submitted the proposal. (See 10 U.S.C. 2305(g) and 41 U.S.C. 253b(m).)

(b) No agency shall disclose any information obtained pursuant to 15.804–5(b) that is exempt from disclosure under the Freedom of Information Act. (See 10 U.S.C. 2306a(d)(2)(C) and 41 U.S.C. 254b(d)(2)(C).)

[FR Doc. 96–33208 Filed 12–31–96; 8:45 am]

BILLING CODE 6820–EP–P

---

48 CFR Parts 4, 12, 15, 16, 25, 31, 46, and 52

[FAC 90–45; FAR Case 96–306; Item V]

RIN 9000–AH16

Federal Acquisition Regulation; Exceptions to Requirements for Certified Cost or Pricing Data

AGENCIES: Department of Defense (DOD), General Services Administration (GSA), and National Aeronautics and Space Administration (NASA).

ACTION: Final rule.

SUMMARY: The Civilian Agency Acquisition Council and the Defense Acquisition Regulations Council have agreed on a final rule to amend the Federal Acquisition Regulation (FAR) to implement Section 4201 of the Federal Acquisition Reform Act of 1996. This regulatory action was not subject to Office of Management and Budget review under Executive Order 12866, dated September 30, 1993, and is not a major rule under 5 U.S.C. 804.

EFFECTIVE DATE: January 1, 1997.

FOR FURTHER INFORMATION CONTACT: Mr. Jeremy Olson at (202) 501–3221 in reference to this FAR case. For general information, contact the FAR Secretariat, Room 4035, GS Building, Washington, DC 20405 (202) 501–4755. Please cite FAC 90–45, FAR case 96–306.

SUPPLEMENTARY INFORMATION:

A. Background

This final FAR rule implements changes to the Truth in Negotiations Act (TINA) contained in Section 4201 of the Clinger-Cohen Act of 1996 (Pub. L. 104–106) and—

Simplifies obtaining a TINA exception for commercial items by eliminating the distinction between catalog or market-priced commercial items and all other commercial items;

Eliminates the subordination of the commercial item exception to the traditional exceptions of adequate price competition, catalog or market-priced commercial items, or prices set by law or regulation, which previously was required by the Federal Acquisition Streamlining Act of 1994 (Pub. L. 103–355) (FASA);

Eliminates the criteria established by FASA for the commercial item exception (i.e., an exception could not be granted unless price reasonableness could be determined based on specific information requirements) and deletes the authority to obtain cost or pricing data for commercial item acquisitions when the criteria is not met; and

Eliminates the clause for postaward audit of information submitted to support the pricing of commercial item contracts.

The Federal Acquisition Reform Act of 1996 was subsequently named the Clinger-Cohen Act of 1996.

A proposed rule was published on August 7, 1996 (61 FR 41214). Sixteen comments were received from seven respondents. All comments were considered in the development of the final rule.

B. Regulatory Flexibility Act

The Department of Defense, the General Services Administration, and the National Aeronautics and Space Administration certify that this final rule will not have a significant economic impact on a substantial number of small entities within the meaning of the Regulatory Flexibility Act, 5 U.S.C. 601, *et seq.*, because most contracts awarded to small entities use simplified acquisition procedures or are awarded on a competitive, fixed-price basis and do not require the submission of cost or pricing data.

C. Paperwork Reduction Act

The Paperwork Reduction Act does not apply because the changes to the FAR do not impose recordkeeping or information collection requirements, or collections of information from offerors, contractors, or members of the public which require the approval of the Office of Management and Budget under 44 U.S.C. 3501, *et seq.*

List of Subjects in 48 CFR Parts 4, 12, 15, 16, 25, 31, 46, and 52

Government procurement.

Dated: December 24, 1996.

Edward C. Loeb,

Director, Federal Acquisition Policy Division.

Therefore, 48 CFR Parts 4, 12, 15, 16, 25, 31, 46, and 52 are amended as set forth below:

1. The authority citation for 48 CFR Parts 4, 12, 15, 16, 25, 31, 46, and 52 continues to read as follows:

Authority: 40 U.S.C. 486(c); 10 U.S.C. chapter 137; and 42 U.S.C. 2473(c).

PART 4—ADMINISTRATIVE MATTERS

4.702 [Amended]

2. Section 4.702 is amended by removing paragraph (a)(3).

PART 12—ACQUISITION OF COMMERCIAL ITEMS

3. Section 12.209 is revised to read as follows:

12.209 Determination of price reasonableness when contracting by negotiation.

When contracting by negotiation for commercial items, the policies and procedures in subpart 15.8 shall be used to establish the reasonableness of prices.

PART 15—CONTRACTING BY NEGOTIATION

4. Section 15.106 is revised to read as follows:

15.106 Contract clause.

(a) This section implements 10 U.S.C. 2313, 41 U.S.C. 254d, and OMB Circular No. A–133.

(b) The contracting officer shall, if contracting by negotiation, insert the clause at 52.215–2, Audit and Records—Negotiation, in solicitations and contracts except those—

(1) Not exceeding the simplified acquisition threshold;

(2) For commercial items exempted under 15.804–1; or

(3) For utility services at rates not exceeding those established to apply uniformly to the general public, plus any applicable reasonable connection charge.

(c) In facilities contracts, the contracting officer shall use the clause with its Alternate I. In cost-reimbursement contracts with educational institutions and other nonprofit organizations, the contracting officer shall use the clause with its Alternate II. If the examination of records by the Comptroller General is waived in accordance with 25.901, the contracting officer shall use the clause with its Alternate III.

15.106–1 and 15.106–2 [Removed]

5. Sections 15.106–1 and 15.106–2 are removed.

15.802 [Amended]

6. Section 15.802 is amended in the third sentence of paragraph (a) introductory text by revising ''15.804–5(b)'' to read ''15.804–5'', and in paragraph (a)(1) by revising ''15.804–5(a)(3)'' to read ''15.804–5(b)''.

7. Section 15.804–1 is amended by revising paragraph (a); removing (b)(2); redesignating (b)(3) through (b)(6) as (b)(2) through (b)(5), respectively, and revising newly designated (b)(3) and (b)(5); and by removing paragraphs (c) and (d). The revised text reads as follows:

15.804–1 Prohibition on obtaining cost or pricing data.

(a) *Exceptions to cost or pricing data requirements.* The contracting officer shall not, pursuant to 10 U.S.C. 2306a and 41 U.S.C. 254b, require submission of cost or pricing data (but may require information other than cost or pricing data to support a determination of price reasonableness or cost realism)—

(1) If the contracting officer determines that prices agreed upon are based on—

(i) Adequate price competition (see exception standards at paragraph (b)(1) of this subsection; or

(ii) Prices set by law or regulation (see exception standards at paragraph (b)(2) of this subsection).

(2) For acquisition of a commercial item (see exception standards at paragraph (b)(3) of this subsection).

(3) For exceptional cases where a waiver has been granted (see exception standards at paragraph (b)(4) of this subsection).

(4) For modifications to contracts or subcontracts for commercial items, if the basic contract or subcontract was awarded without the submission of cost or pricing data because the action was granted an exception from cost or pricing data requirements under paragraph (a)(1) or (a)(2) of this subsection and the modification does not change the contract or subcontract to a contract or subcontract for the acquisition of other than a commercial item (see exception standards at paragraph (b)(5) of this subsection).

(b) * * *

(3) *Commercial items.* An acquisition for an item that meets the commercial item definition in 2.101 is excepted from the requirement to obtain cost or pricing data.

* * * * *

(5) *Modifications.* This exception applies when the original contract or subcontract was exempt from cost or pricing data based on adequate price competition, price set by law or regulation, or was a contract or subcontract for the acquisition of a commercial item (15.804–1(a)(1) or (a)(2)). For modifications of contracts or subcontracts for commercial items, the exception at 15.804–1(a)(4) applies if the modification does not change the item from a commercial item to a noncommercial item. However, if the modification to a contract or a subcontract changes the nature of the work under the contract or subcontract either by a change to the commercial item or by the addition of other noncommercial work, the contracting officer is not prohibited from obtaining cost or pricing data for the changed or added work.

8. Section 15.804–2 is amended in the second sentence of paragraph (a)(1), introductory text, by removing ''15.804–1 (b)(5)'' and inserting ''15.804–1(b)(4)''; and in paragraph (a)(1)(ii) by removing ''15.804–1(b)(5)'' and inserting ''15.804–1(b)(4)'' in its place; and by revising paragraph (a)(2) to read as follows:

15.804–2 Requiring cost or pricing data.

(a) * * *

(2) Unless prohibited because an exception at 15.804–1 (a)(1) or (a)(2) applies, the head of the contracting activity, without power of delegation, may authorize the contracting officer to obtain cost or pricing data for pricing actions below the pertinent threshold in paragraph (a)(1) of this subsection provided the action exceeds the simplified acquisition threshold. The head of the contracting activity shall justify the requirement for cost or pricing data. The documentation shall include a written finding that cost or pricing data are necessary to determine whether the price is fair and reasonable and the facts supporting that finding.

* * * * *

9. Section 15.804–5 is revised to read as follows:

15.804–5 Requiring information other than cost or pricing data.

(a) *General.* (1) If cost or pricing data are not required because an exception applies, or an action is at or below the cost or pricing data threshold, the contracting officer shall perform a price analysis to determine the reasonableness of the price and any need for further negotiation.

(2) The contracting officer shall require submission of information other than cost or pricing data only to the extent necessary to determine reasonableness of the price or cost realism. Unless an exception under 15.804–1(a)(1) applies, the contracting officer shall obtain, at a minimum, appropriate information on the prices at which the same item or similar items have previously been sold that is adequate for evaluating the reasonableness of the price.

(3) The contractor's format for submitting such information shall generally be used (see 15.804–5(c)(2)).

(4) The contracting officer shall ensure that information used to support price negotiations is sufficiently current to permit negotiation of a fair and reasonable price. Requests for updated offeror information should be limited to information that affects the adequacy of the proposal for negotiations, such as changes in price lists. Such data shall not be certified in accordance with 15.804–4.

(b) *Adequate price competition*. When an acquisition is based on adequate price competition, generally no additional information is necessary to determine the reasonableness of price. However, if it is determined that additional information is necessary to determine the reasonableness of the price, the contracting officer shall, to the maximum extent practicable, obtain the additional information from sources other than the offeror. In addition, the contracting officer may request information to determine the cost realism of competing offers or to evaluate competing approaches.

(c) *Limitations relating to commercial items*. (1) Requests for sales data relating to commercial items shall be limited to data for the same or similar items during a relevant time period.

(2) The contracting officer shall, to the maximum extent practicable, limit the scope of the request for information relating to commercial items to include only information that is in the form regularly maintained by the offeror in commercial operations.

(3) Any information relating to commercial items obtained pursuant to this paragraph (c) that is prohibited from disclosure by 24.202(a) or exempt from disclosure under the Freedom of Information Act (5 U.S.C. 552(b)) (see 24.202(b)) shall not be disclosed by the Government.

10. Section 15.804–6 is amended in paragraph (a)(5) by removing the words ''or postaward'' and in Table 15–2 by revising the fourth paragraph of Item 1 entitled ''Established Catalog or Market Prices or Prices Set by Law or Regulation or Commercial Items Not Covered By Another Exception'' to read as follows:

15.804–6 Instructions for submission of cost or pricing data or information other than cost or pricing data.

* * * * *

Prices Set by Law or Regulation or Commercial Item Exception—When an exception from the requirement to submit cost or pricing data is requested, whether the item was produced by others or by the offeror, provide justification for the exception.

* * * * *

11. Section 15.812–1 is amended by revising paragraph (b) and the fourth sentence of paragraph (c) to read as follows:

15.812–1 General.

* * * * *

(b) However, the policy in paragraph (a) of this subsection does not apply to any contract or subcontract for acquisition of a commercial item.

(c) * * * The information shall not be requested for commercial items. * * *

12. Section 15.812–2 is amended by revising paragraphs (a)(3) and (a)(5); and adding (a)(6) to read as follows:

15.812–2 Contract clause.

(a) * * *

(3) Utility services under part 41;

* * * * *

(5) Acquisitions of commercial items; and

(6) Contracts for petroleum products.

* * * * *

PART 16—TYPES OF CONTRACTS

13. Section 16.203–4 is amended by revising paragraphs (a)(1)(ii) and (b)(1)(ii) to read as follows:

16.203–4 Contract clauses.

(a)(1) * * *

* * * * *

(ii) The requirement is for standard supplies that have an established catalog or market price.

* * * * *

(b)(1) * * *

* * * * *

(ii) The requirement is for semistandard supplies for which the prices can be reasonably related to the prices of nearly equivalent standard supplies that have an established catalog or market price.

* * * * *

PART 25—FOREIGN ACQUISITION

25.901 [Amended]

14. Section 25.901 is amended in the first sentence of paragraph (b) by removing ''15.106–1(b)'' and inserting ''15.106(b)'' in its place.

PART 31—CONTRACT COST PRINCIPLES AND PROCEDURES

15. Section 31.205–26 is amended by revising paragraph (f) to read as follows:

31.205–26 Material costs.

* * * * *

(f) When a commercial item under paragraph (e) of this subsection is transferred at a price based on a catalog or market price, the price should be adjusted to reflect the quantities being acquired and may be adjusted to reflect the actual cost of any modifications necessary because of contract requirements.

PART 46—QUALITY ASSURANCE

46.804 [Amended]

16. Section 46.804 is amended in the second sentence by removing ''(see 15.804–1(b)(2))''.

PART 52—SOLICITATION PROVISIONS AND CONTRACT CLAUSES

52.215–2 [Amended]

17. Section 52.215–2 is amended in the introductory text by removing ''15.106–1(b)'' and inserting ''15.106(b)'' in its place; in Alternates I, II and III, by revising the Alternate dates to read ''(JAN 1997)'' and removing ''15.106–1(c)'' and inserting ''15.106(c)'' in its place.

18. Section 52.215–26 is revised to read as follows:

52.215–26 Integrity of Unit Prices.

As prescribed in 15.812–2, insert the following clause:

INTEGRITY OF UNIT PRICES (JAN 1997)

(a) Any proposal submitted for the negotiation of prices for items of supplies shall distribute costs within contracts on a basis that ensures that unit prices are in proportion to the items' base cost (e.g., manufacturing or acquisition costs). Any method of distributing costs to line items that distorts unit prices shall not be used. For example, distributing costs equally among line items is not acceptable except when there is little or no variation in base cost. Nothing in this paragraph requires submission of cost or pricing data not otherwise required by law or regulation.

(b) The Offeror/Contractor shall also identify those supplies which it will not manufacture or to which it will not contribute significant value when requested by the Contracting Officer.

(End of clause)

Alternate I (JAN 1997). As prescribed in 15.812–2(b), substitute the following paragraph (b) for paragraph (b) of the basic clause:

(b) The Offeror/Contractor shall also identify those supplies which it will not manufacture or to which it will not contribute significant value.

19. Section 52.215–41 is amended by revising the provision and Alternates II and III to read as follows:

52.215–41 Requirements for Cost or Pricing Data or Information Other Than Cost or Pricing Data.

* * * * *

REQUIREMENTS FOR COST OR PRICING DATA OR INFORMATION OTHER THAN COST OR PRICING DATA (JAN 1997)

(a) *Exceptions from cost or pricing data*. (1) In lieu of submitting cost or pricing data,

offerors may submit a written request for exception by submitting the information described in the following subparagraphs. The Contracting Officer may require additional supporting information, but only to the extent necessary to determine whether an exception should be granted, and whether the price is fair and reasonable.

(i) *Identification of the law or regulation establishing the price offered*. If the price is controlled under law by periodic rulings, reviews, or similar actions of a governmental body, attach a copy of the controlling document, unless it was previously submitted to the contracting office.

(ii) For a commercial item exception, the offeror shall submit, at a minimum, information on prices at which the same item or similar items have previously been sold that is adequate for evaluating the reasonableness of the price for this acquisition. Such information may include—

(A) For catalog items, a copy of or identification of the catalog and its date, or the appropriate pages for the offered items, or a statement that the catalog is on file in the buying office to which the proposal is being submitted. Provide a copy or describe current discount policies and price lists (published or unpublished), e.g., wholesale, original equipment manufacturer, or reseller. Also explain the basis of each offered price and its relationship to the established catalog price, including how the proposed price relates to the price of recent sales in quantities similar to the proposed quantities.

(B) For market-priced items, the source and date or period of the market quotation or other basis for market price, the base amount, and applicable discounts. In addition, describe the nature of the market.

(C) For items included on an active Federal Supply Service Multiple Award Schedule contract, proof that an exception has been granted for the schedule item.

(2) The offeror grants the Contracting Officer or an authorized representative the right to examine, at any time before award, books, records, documents, or other directly pertinent records to verify any request for an exception under this provision, and the reasonableness of price. Access does not extend to cost or profit information or other data relevant solely to the offeror's determination of the prices to be offered in the catalog or marketplace.

(b) *Requirements for cost or pricing data*. If the offeror is not granted an exception from the requirement to submit cost or pricing data, the following applies:

(1) The offeror shall submit cost or pricing data on Standard Form (SF) 1411, Contract Pricing Proposal Cover Sheet (Cost or Pricing Data Required), with supporting attachments prepared in accordance with Table 15–2 of FAR 15.804–6(b)(2).

(2) As soon as practicable after agreement on price, but before contract award (except for unpriced actions such as letter contracts), the offeror shall submit a Certificate of Current Cost or Pricing Data, as prescribed in FAR 15.804–4.

(End of provision)

* * * * *

Alternate II (JAN 1997). As prescribed in 15.804–8(h), add the following paragraph (c) to the basic provision:

(c) When the proposal is submitted, also submit one copy each, including the SF 1411 and supporting attachments, to (1) the Administrative Contracting Officer, and (2) the Contract Auditor.

Alternate III (JAN 1997). As prescribed in 15.804–8(h), add the following paragraph (c) to the basic provision (if Alternate II is also used, redesignated as paragraph (d)):

(c) Submit the cost portion of the proposal via the following electronic media: (Insert media format, e.g., electronic spreadsheet format, electronic mail, etc.).

* * * * *

20. Section 52.215–42 is amended by revising the clause; and revising the date and the last sentence in paragraph (b) of Alternate IV to read as follows:

52.215–42 Requirements for Cost or Pricing Data or Information Other Than Cost or Pricing Data—Modifications.

* * * * *

REQUIREMENTS FOR COST OR PRICING DATA OR INFORMATION OTHER THAN COST OR PRICING DATA—MODIFICATIONS (JAN 1997)

(a) *Exceptions from cost or pricing data.* (1) In lieu of submitting cost or pricing data for modifications under this contract, for price adjustments expected to exceed the threshold set forth at FAR 15.804–2(a)(1) on the date of the agreement on price or the date of the award, whichever is later, the Contractor may submit a written request for exception by submitting the information described in the following subparagraphs. The Contracting Officer may require additional supporting information, but only to the extent necessary to determine whether an exception should be granted, and whether the price is fair and reasonable.

(i) Identification of the law or regulation establishing the price offered. If the price is controlled under law by periodic rulings, reviews, or similar actions of a governmental body, attach a copy of the controlling document, unless it was previously submitted to the contracting office.

(ii) Information on modifications of contracts or subcontracts for commercial items.

(A) If (*1*) the original contract or subcontract was granted an exception from cost or pricing data requirements because the price agreed upon was based on adequate price competition, or prices set by law or regulation, or was a contract or subcontract for the acquisition of a commercial item, and (*2*) the modification (to the contract or subcontract) is not exempted based on one of these exceptions, then the Contractor may provide information to establish that the modification would not change the contract or subcontract from a contract or subcontract for the acquisition of a commercial item to a contract or subcontract for the acquisition of an item other than a commercial item.

(B) For a commercial item exception, the Contractor shall provide, at a minimum, information on prices at which the same item or similar items have previously been sold that is adequate for evaluating the reasonableness of the price of the modification. Such information may include:

(*1*) For catalog items, a copy of or identification of the catalog and its date, or the appropriate pages for the offered items, or a statement that the catalog is on file in the buying office to which the proposal is being submitted. Provide a copy or describe current discount policies and price lists (published or unpublished), e.g., wholesale, original equipment manufacturer, or reseller. Also explain the basis of each offered price and its relationship to the established catalog price, including how the proposed price relates to the price of recent sales in quantities similar to the proposed quantities.

(*2*) For market-priced items, the source and date or period of the market quotation or other basis for market price, the base amount, and applicable discounts. In addition, describe the nature of the market.

(*3*) For items included on an active Federal Supply Service Multiple Award Schedule contract, proof that an exception has been granted for the schedule item.

(2) The Contractor grants the Contracting Officer or an authorized representative the right to examine, at any time before award, books, records, documents, or other directly pertinent records to verify any request for an exception under this clause, and the reasonableness of price. Access does not extend to cost or profit information or other data relevant solely to the Contractor's determination of the prices to be offered in the catalog or marketplace.

(b) *Requirements for cost or pricing data.* If the Contractor is not granted an exception from the requirement to submit cost or pricing data, the following applies:

(1) The Contractor shall submit cost or pricing data on Standard Form (SF) 1411, Contract Pricing Proposal Cover Sheet (Cost or Pricing Data Required), with supporting attachments prepared in accordance with Table 15–2 of FAR 15.804–6(b)(2).

(2) As soon as practical after agreement on price, but before award (except for unpriced actions), the Contractor shall submit a Certificate of Current Cost or Pricing Data, as prescribed by FAR 15.804–4.

(End of clause)

* * * * *

Alternate IV (JAN 1997) * * *

(b) * * * *Standard Form 1448, Proposal Cover Sheet (Cost or Pricing Data Not Required), may be used for information other than cost or pricing data.)*

52.215–43 [Removed]

21. Section 52.215–43 is removed.

22. Section 52.216–2 is amended by revising the introductory paragraph, the clause date, and the third sentence in paragraph (a) to read as follows:

52.216–2 Economic Price Adjustment—Standard Supplies.

As prescribed in 16.203–4(a), insert the following clause. The clause may be modified by increasing the 10 percent limit on aggregate increases specified in subparagraph (c)(1), upon approval by the chief of the contracting office.

ECONOMIC PRICE ADJUSTMENT—STANDARD SUPPLIES (JAN 1997)

(a) * * * The term ''established price'' means a price that (1) is an established catalog or market price for a commercial item sold in substantial quantities to the general public, and (2) is the net price after applying any standard trade discounts offered by the Contractor.

* * * * *

23. Section 52.216–3 is amended by revising the introductory paragraph, the clause date, and the second sentence of paragraph (a) to read as follows:

52.216–3 Economic Price Adjustment—Semistandard Supplies.

As prescribed in 16.203–4(b), insert the following clause. The clause may be modified by increasing the 10 percent limit on aggregate increases specified in subparagraph (c)(1), upon approval by the chief of the contracting office.

ECONOMIC PRICE ADJUSTMENT—STANDARD SUPPLIES (JAN 1997)

(a) * * * The term ''established price'' means a price that (1) is an established catalog or market price for a commercial item sold in substantial quantities to the general public, and (2) is the net price after applying any standard trade discounts offered by the Contractor. * * *

[FR Doc. 96–33209 Filed 12–31–96; 8:45 am]

BILLING CODE 6820–EP–P

---

48 CFR Parts 5, 14, 15, 17, 25, 27, and 52

[FAC 90–45; FAR Case 93–310; Item VI]

RIN 9000–AF60

Federal Acquisition Regulation; Implementation of the North American Free Trade Agreement Implementation Act

AGENCIES: Department of Defense (DOD), General Services Administration (GSA), and National Aeronautics and Space Administration (NASA).

ACTION: Interim rule adopted as final with changes.

SUMMARY: The Civilian Agency Acquisition Council and the Defense Acquisition Regulations Council have agreed on a final rule implementing the North American Free Trade Agreement (NAFTA) Implementation Act related to applications of the Buy American Act provisions to acquisition of certain Mexican and Canadian products. This regulatory action was not subject to Office of Management and Budget review under Executive Order 12866, dated September 30, 1993, and is not a major rule under 5 U.S.C. 804.

EFFECTIVE DATE: January 1, 1997.

FOR FURTHER INFORMATION CONTACT: Mr. Paul L. Linfield at (202) 501–1757 in reference to this FAR case. For general information, contact the FAR Secretariat, Room 4037, GS Building, Washington, DC 20405, (202) 501–4755. Please cite FAC 90–45, FAR case 93–310.

SUPPLEMENTARY INFORMATION:

A. Background

An interim rule was published in the Federal Register on January 5, 1994 (59 FR 544, FAC 90–19), FAR case 93–310, to implement NAFTA. Based on the analysis of public comments, a revised interim rule was published in the Federal Register on June 20, 1996 (61 FR 31646) (FAC 90–39). One late public comment was received and considered, but was not incorporated in the final rule. This final rule does contain revisions resulting from public comments received on FAR Case 96–312 published as Item II in this FAC. Upon consideration of those public comments, certifications eliminated under the interim rule published at 61 FR 31646 are being retained. The Government believes if the certifications were eliminated, offerors would be required to submit more detailed information regarding the origins of offered products. Without this information, enforcing a national policy grounded in vital economic and security interests would be extremely difficult. To satisfy this national policy interest, the self-policing discipline of a certification was determined to be the less burdensome alternative.

B. Regulatory Flexibility Act

This final rule is expected to have a significant economic impact on a substantial number of small entities within the meaning of the Regulatory Flexibility Act, 5 U.S.C. 601 *et seq.*, because the rule waives the Buy American Act for certain Mexican and Canadian products. A Final Regulatory Flexibility Analysis (FRFA) has been prepared. A copy of the FRFA may be obtained from the FAR Secretariat. The FRFA is summarized as follows: This final rule generally applies to all businesses, large and small, that contract with Federal agencies other than the Department of Defense for supply contracts with an estimated value above $25,000. This final rule also applies to Federal construction contracts, including those awarded by the Department of Defense, with an acquisition value of $6,500,000 or more. Although U.S. businesses may face increased competition from Canadian or Mexican firms, they may also find an increased market for their materials in Canada and Mexico.

C. Paperwork Reduction Act

The Paperwork Reduction Act applies because the provision at FAR 52.225–20 requires offerors to list the line item number and the country of origin for any end product other than a domestic end product. Accordingly, a request for clearance of the information collection requirement was submitted to the Office of Management and Budget under 44 U.S.C. 3501, *et seq.* and has been approved under OMB Control Number 9000–0130.

List of Subjects in 48 CFR Parts 5, 14, 15, 17, 25, 27, and 52

Government procurement.

Dated: December 24, 1996.

Edward C. Loeb,

Director, Federal Acquisition Policy Division.

Interim Rule Adopted as Final With Changes

Accordingly, the interim rule amending 48 CFR Parts 5, 14, 15, 17, 25, 27, and 52, which was published at 59 FR 544 on January 5, 1994, and amended by the interim rule published at 61 FR 31646 on June 20, 1996, is adopted as final with changes as set forth below:

1. The authority citation for 48 CFR Parts 5, 14, 15, 17, 25, 27, and 52 continues to read as follows:

Authority: 40 U.S.C. 486(c); 10 U.S.C. chapter 137; and 42 U.S.C. 2473(c).

PART 25—FOREIGN ACQUISITION

25.408 [Amended]

2. Section 25.408 is amended in paragraph (a)(3) by removing the word ''Provision'' in the title of the provision and inserting ''Certificate''.

PART 52—SOLICITATION PROVISIONS AND CONTRACT CLAUSES

3. Section 52.212–3 is amended by revising the date of the provision and paragraphs (g)(1)(i), (g)(1)(iii), and (g)(2) to read as follows:

52.212–3 Offeror Representations and Certifications—Commercial Items.

* * * * *

OFFEROR REPRESENTATIONS AND CERTIFICATIONS—COMMERCIAL ITEMS (JAN 1997)

* * * * *

(g)(1) * * *

(i) The offeror certifies that each end product being offered, except those listed in paragraph (g)(1)(ii) of this provision, is a domestic end product (as defined in the clause entitled ''Buy American Act—North American Free Trade Agreement

Implementation Act—Balance of Payments Program,'' and that components of unknown origin have been considered to have been mined, produced, or manufactured outside the United States.

* * * * *

(iii) Offers will be evaluated by giving certain preferences to domestic end products or NAFTA country end products over other end products. In order to obtain these preferences in the evaluation of each excluded end product listed in paragraph (g)(1)(ii) of this provision, offerors must identify and certify below those excluded end products that are NAFTA country end products. Products that are not identified and certified below will not be deemed NAFTA country end products. The offeror certifies that the following supplies qualify as ''NAFTA country end products'' as that term is defined in the clause entitled ''Buy American Act—North American Free Trade Agreement Implementation Act—Balance of Payments Program'':

_____

_____

_____

(Insert line item numbers)

* * * * *

(2) *Alternate I.* If Alternate I to the clause at 52.225–21 is included in this solicitation, substitute the following paragraph (g)(1)(iii) for paragraph (g)(1)(iii) of this provision:

(g)(1)(iii) Offers will be evaluated by giving certain preferences to domestic end products or Canadian end products over other end products. In order to obtain these preferences in the evaluation of each excluded end product listed in paragraph (b) of this provision, offerors must identify and certify below those excluded end products that are Canadian end products. Products that are not identified and certified below will not be deemed Canadian end products.

The offeror certifies that the following supplies qualify as ''Canadian end products'' as that term is defined in the clause entitled ''Buy American Act—North American Free Trade Agreement Implementation Act—Balance of Payments Program'':

_____

(Insert line item numbers)

* * * * *

(End of provision)

4. Section 52.225–20 is amended in the section heading and provision heading by removing the word ''Provision'' and inserting ''Certificate''; revising the date of the provision and its Alternate I to read ''(JAN 1997)''; revising paragraph (a) of the provision; revising the first paragraph of paragraph (c) of the provision and of Alternate I; and by inserting the words ''offeror certifies that the'' after the first word ''The'' in the first sentence of the second paragraph of paragraph (c) of the provision and of Alternate I to read as follows:

52.225–20 Buy American Act—North American Free Trade Agreement Implementation Act—Balance of Payments Program Certificate.

* * * * *

BUY AMERICAN ACT—NORTH AMERICAN FREE TRADE AGREEMENT IMPLEMENTATION ACT—BALANCE OF PAYMENTS PROGRAM CERTIFICATE

(JAN 1997)

(a) The offeror certifies that each end product being offered, except those listed in paragraph (b) of this provision, is a domestic end product (as defined in the clause entitled ''Buy American Act—North American Free Trade Agreement Implementation Act—Balance of Payments Program'') and that components of unknown origin have been considered to have been mined, produced, or manufactured outside the United States.

* * * * *

(c) Offers will be evaluated by giving certain preferences to domestic end products or NAFTA country end products over other end products. In order to obtain these preferences in the evaluation of each excluded end product listed in paragraph (b) of this provision, offerors must identify and certify below those excluded end products that are NAFTA country end products. Products that are not identified and certified below will not be deemed NAFTA country end products.

* * * * *

Alternate I (JAN 1997). * * *

(c) Offers will be evaluated by giving certain preferences to domestic end products or Canadian end products over other end products. In order to obtain these preferences in the evaluation of each excluded end product listed in paragraph (b) of this provision, offerors must identify and certify below those excluded end products that are Canadian end products. Products that are not identified below will not be deemed Canadian end products.

* * * * *

52.225–21 [Amended]

5. Section 52.225–21 is amended by revising the date of the clause to read ''(JAN 1997)'' and by removing the word ''specifying'' in the fourth sentence of paragraph (c) of the clause and of Alternate I and inserting ''certifying''.

[FR Doc. 96–33210 Filed 12–31–96; 8:45 am]

BILLING CODE 6820–EP–P

48 CFR Parts 5, 6, 11, 12 and 13

[FAC 90–45; FAR Case 96–307; Item VII]

RIN 9000–AH20

Federal Acquisition Regulation; Application of Special Simplified Procedures to Certain Commercial Items

AGENCIES: Department of Defense (DOD), General Services Administration (GSA), and National Aeronautics and Space Administration (NASA).

ACTION: Final rule.

SUMMARY: The Civilian Agency Acquisition Council and the Defense Acquisition Regulations Council have agreed on a final rule to amend the Federal Acquisition Regulation (FAR) to implement Section 4202 of the Clinger-Cohen Act of 1996 (Public Law 104–106). Section 4202 requires revisions to the FAR to incorporate special simplified procedures for the acquisition of certain commercial items with a value greater than the simplified acquisition threshold ($100,000) but not greater than $5 million. The purpose of this revision is to vest contracting officers with additional procedural discretion, so that commercial item acquisitions in this dollar range may be solicited, offered, evaluated, and awarded in a simplified manner that maximizes efficiency and economy and minimizes burden and administrative costs for both the Government and industry. This regulatory action was not subject to Office of Management and Budget review under Executive Order 12866, dated September 30, 1993. This is not a major rule under 5 U.S.C. 804.

EFFECTIVE DATE: January 1, 1997.

FOR FURTHER INFORMATION CONTACT: Ms. Victoria Moss at (202) 501–4764 in reference to this FAR case. For general information, contact the FAR Secretariat, Room 4037, GS Building, Washington, DC 20405 (202) 501–4755. Please cite FAC 90–45, FAR case 96–307.

SUPPLEMENTARY INFORMATION:

A. Background

This final rule amends the Federal Acquisition Regulation to implement section 4202 of the Clinger-Cohen Act of 1996 (Public Law 104–106). Section 4202 authorizes special simplified procedures for acquisitions of commercial items at amounts greater than the simplified acquisition threshold ($100,000) but not greater than $5 million, when the contracting officer reasonably expects, based on the nature of the commercial items sought and on market research, that offers will include only commercial items. The authority to use the special simplified procedures under this section expires on January 1, 2000. Section 4202 also amends 41 U.S.C. 416 to permit issuance of solicitations for commercial items in fewer than 15 days after the synopsis notice is published.

A proposed rule was published in the Federal Register on September 6, 1996 (61 FR 47384). Twenty-four sources

submitted comments in response to the proposed rule. All comments were considered in the development of the final rule. Among other changes adopted in this final rule, the proposed language at 13.604–2, Alternative negotiation techniques, which introduced into the FAR an auctioning-like concept, has been removed from this final rule for further study and analysis under new FAR case 96–024.

B. Regulatory Flexibility Act

The changes may have a significant economic impact on a substantial number of small entities within the meaning of the Regulatory Flexibility Act, 5 U.S.C. 601 *et seq.*, because it is expected to increase the number of Federal contracts awarded using procedures that are familiar to small entities. A Final Regulatory Flexibility Analysis (FRFA) has been prepared and will be provided to the Chief Counsel for Advocacy of the Small Business Administration. A copy of the FRFA may be obtained from the FAR Secretariat. The analysis is summarized as follows: One public comment was received in response to the initial regulatory flexibility analysis. The respondent stated that the analysis did not indicate that regulatory alternatives were considered in the process of drafting the proposed rule, and that there was no estimated measure or quantification of small business impact or number and dollar value of Federal contracts likely to be affected. The final regulatory flexibility analysis contains a more complete description of the alternatives that were considered for the purpose of minimizing any adverse impact on small businesses and reflects data extrapolated from the Federal Procurement Data System which show that in fiscal year 1995, 73 percent of all purchases made under the procedures used in Part 13 were awarded to small businesses. As stated in the initial regulatory flexibility analysis, the Federal Procurement Data System is just beginning to track acquisitions of commercial items. Until more complete data are collected, it will be difficult to precisely estimate the number of small entities to which the rule will apply. The rule imposes no new reporting, recordkeeping, or other compliance requirements. We considered whether flexible compliance with this rule would be appropriate. Since the rule is expected to have a beneficial impact on industry, it was determined that flexible compliance would not be appropriate in this case. Instead, the rule is intended to apply to both small and large entities equally so that both may benefit. However, in developing the final rule, alternatives were considered, and revisions were made, to minimize possible economic impact on small entities. The language on alternative negotiation techniques has been removed from the rule pending further study and analysis. At the present time, this rule does not extend authority to use the special test procedures for construction. The proposed language included on construction, in Part 13, was not intended to address the applicability of the test procedures to construction and the language in the final rule has been amended to eliminate this ambiguity. The broader issue of the applicability of the FAR's commercial item policies to construction contracting is under review.

C. Paperwork Reduction Act

The Paperwork Reduction Act does not apply because the changes to the FAR do not impose recordkeeping or information collection requirements, or collections of information from offerors, contractors, or members of the public which require the approval of the Office of Management and Budget under 44 U.S.C. 3501, *et seq.*

List of Subjects in 48 CFR Parts 5, 6, 11, 12 and 13

Government procurement.

Dated: December 24, 1996.

Edward C. Loeb,

Director, Federal Acquisition Policy Division.

Therefore, 48 CFR Parts 5, 6, 11, 12 and 13 are amended as set forth below:

1. The authority citation for 48 CFR Parts 5, 6, 11, 12 and 13 continues to read as follows:

Authority: 40 U.S.C. 486(c); 10 U.S.C. 2301 to 2331; and 42 U.S.C. 2473(c).

PART 5—PUBLICIZING CONTRACT ACTIONS

2. Section 5.203 is amended by revising paragraph (a) and adding paragraph (h) to read as follows:

5.203 Publicizing and response time.

* * * * *

(a) A notice of contract action shall be published in the *Commerce Business Daily* at least 15 days before issuance of a solicitation except when that, for acquisitions of commercial items, the contracting officer may—

(1) Establish a shorter period for issuance of the solicitation; or

(2) Use the combined CBD synopsis/solicitation procedure (see 12.603).

* * * * *

(h) In addition to other requirements set forth in this section, for acquisitions subject to NAFTA or the Trade Agreements Act (see subpart 25.4), the period of time between publication of the synopsis notice and receipt of offers shall be no less than 40 days. However, if the acquisition falls within a general category identified in an annual forecast, the availability of which is published in the CBD, the contracting officer may reduce this time period to as few as 10 days.

3. Section 5.207 is amended by revising paragraph (e)(3) to read as follows:

5.207 Preparation and transmittal of synopses.

* * * * *

(e) * * *

(3) Except for contract actions equal to or less than the simplified acquisition threshold or acquisitions of commercial items, the synopsis shall refer to Numbered Note 22 for noncompetitive contract actions. If it is anticipated that award will be made via a delivery order to an existing basic ordering agreement, the synopsis shall so state.

* * * * *

PART 6—COMPETITION REQUIREMENTS

4. Section 6.001(a) is revised to read as follows:

6.001 Applicability.

* * * * *

(a) Contracts awarded using the simplified acquisition procedures of part 13 (but see 13.602 for requirements pertaining to sole source acquisitions of commercial items under subpart 13.6);

* * * * *

PART 11—SUBSCRIBING AGENCY NEEDS

5. Section 11.002 is amended by revising paragraph (a)(1)(ii) and adding paragraph (e) to read as follows:

11.002 Policy.

(a) * * *

(1) * * *

(ii) Only include restrictive provisions or conditions to the extent necessary to satisfy the needs of the agency or as authorized by law.

* * * * *

(e) Some or all of the performance levels or performance specifications in a solicitation may be identified as targets rather than as fixed or minimum requirements.

6. Section 11.104 is amended by revising paragraph (a) to read as follows:

11.104 Items peculiar to one manufacturer.

* * * * *

(a) The particular brand-name, product, or feature is essential to the Government's requirements, and market research indicates other companies' similar products, or products lacking the particular feature, do not meet, or cannot be modified to meet, the agency's minimum needs; and

* * * * *

PART 12—ACQUISITION OF COMMERCIAL ITEMS

7. Section 12.202 is amended by revising paragraph (b) to read as follows:

12.202 Market research and description of agency need.

* * * * *

(b) The description of agency need must contain sufficient detail for potential offerors of commercial items to know which commercial products or services may be suitable. Generally, for acquisitions in excess of the simplified acquisition threshold, an agency's statement of need for a commercial item will describe the type of product or service to be acquired and explain how the agency intends to use the product or service in terms of function to be performed, performance requirement or essential physical characteristics. Describing the agency's needs in these terms allows offerors to propose methods that will best meet the needs of the Government.

* * * * *

8. Section 12.203 is amended by adding a sentence to the end of the paragraph to read as follows:

12.203 Procedures for solicitation, evaluation, and award.

* * * For acquisitions of commercial items exceeding the simplified acquisition threshold but not exceeding $5,000,000, including options, contracting activities shall employ the simplified procedures authorized by subpart 13.6 to the maximum extent practicable.

9. Section 12.204 is revised to read as follows:

12.204 Solicitation/contract form.

(a) The contracting officer shall use the Standard Form 1449, Solicitation/Contract/Order for Commercial Items, if (1) the acquisition is expected to exceed the simplified acquisition threshold; (2) a paper solicitation or contract is being issued; and (3) procedures at 12.603 are not being used. Use of the SF 1449 is nonmandatory but encouraged for commercial acquisitions not exceeding the simplified acquisition threshold.

(b) Consistent with the requirements at 5.203 (a) and (h), the contracting officer may allow fewer than 15 days before issuance of the solicitation.

10. Section 12.205 is amended by revising paragraph (c) to read as follows:

12.205 Offers.

* * * * *

(c) Consistent with the requirements at 5.203 (b) and (h), the contracting officer may allow fewer than 30 days response time for receipt of offers for commercial items.

11. Section 12.213 is revised to read as follows:

12.213 Other commercial practices.

It is a common practice in the commercial marketplace for both the buyer and seller to propose terms and conditions written from their particular perspectives. The terms and conditions prescribed in this part seek to balance the interests of both the buyer and seller. These terms and conditions are generally appropriate for use in a wide range of acquisitions. However, market research may indicate other commercial practices that are appropriate for the acquisition of the particular item. These practices should be considered for incorporation into the solicitation and contract if the contracting officer determines them appropriate in concluding a business arrangement satisfactory to both parties and not otherwise precluded by law or Executive order.

12. Section 12.302(a) is revised to read as follows:

12.302 Tailoring of provisions and clauses for the acquisition of commercial items.

(a) *General.* The provisions and clauses established in this subpart are intended to address, to the maximum extent practicable, commercial market practices for a wide range of potential Government acquisitions of commercial items. However, because of the broad range of commercial items acquired by the Government, variations in commercial practices, and the relative volume of the Government's acquisitions in the specific market, contracting officers may, within the limitations of this subpart, and after conducting appropriate market research, tailor the provision at 52.212—1, Instructions to Offerors-Commercial Items, and the clause at 52.212—4, Contract Terms and Conditions-Commercial Items, to adapt to the market conditions for each acquisition.

* * * * *

13. Section 12.602 is amended by revising paragraph (a) to read as follows:

12.602 Streamlined evaluation of offers.

(a) When evaluation factors are used, the contracting officer may insert a provision substantially the same as the provision at 52.212–2, Evaluation—Commercial Items, in solicitations for commercial items or comply with the procedures in 13.106–2 if the acquisition is being made using simplified acquisition procedures. When the provision at 52.212–2 is used, paragraph (a) of the provision shall be tailored to the specific acquisition to describe the evaluation factors and relative importance of those factors. However, when using the simplified acquisition procedures in part 13, contracting officers are not required to describe the relative importance of evaluation factors.

* * * * *

14. Section 12.603 is amended by revising paragraph (c)(3)(ii) to read as follows:

12.603 Streamlined solicitation for commercial items.

* * * * *

(c) * * *

(3) * * *

(ii) When using the combined CBD synopsis/solicitation, contracting officers shall establish a response time in accordance with 5.203(b) (but see 5.203(h)).

* * * * *

PART 13—SIMPLIFIED ACQUISITION PROCEDURES

15. Section 13.000 is revised to read as follows:

13.000 Scope of part.

This part prescribes policies and procedures for the acquisition of supplies and services, including construction, research and development, and commercial items, the aggregate amount of which does not exceed the simplified acquisition threshold (see 2.101). Section 13.601 provides special authority for acquisitions of commercial items exceeding the simplified acquisition threshold but not greater than $5,000,000, including options. See part 12, Acquisition of Commercial Items, for policies applicable to the acquisition of commercial items exceeding the micro-purchase threshold. See 36.602–5 for simplified procedures to be used when acquiring architect-engineering services.

16. Section 13.103 is amended by revising paragraphs (b), (c) and (j) to read as follows:

13.103 Policy.

* * * * *

(b) The contracting office shall not use simplified acquisition procedures for contract actions exceeding $50,000 after December 31, 1999, unless the office's

cognizant agency has certified full FACNET capability in accordance with 4.505–2. This limitation does not apply to acquisitions of commercial items conducted using subpart 13.6.

(c) Simplified acquisition procedures shall not be used in the acquisition of supplies and services initially estimated to exceed the simplified acquisition threshold (or $5,000,000, including options, for acquisitions of commercial items using subpart 13.6), even though resulting awards do not exceed the applicable threshold. Requirements aggregating more than the simplified acquisition threshold (or $5,000,000, including options, if using subpart 13.6) or the micro-purchase threshold shall not be broken down into several purchases that are less than the applicable threshold merely to permit use of simplified acquisition procedures, or to avoid any requirements that apply to purchases exceeding the micro-purchase threshold.

* * * * *

(j) Contracting officers are encouraged to use innovative approaches in awarding contracts using the simplified acquisition procedures under the authority of this part. For acquisitions of other than commercial items not expected to exceed the simplified acquisition threshold, contracting officers may use any appropriate combination of the procedures in part 13, 14, 15, 35, or 36, including the use of Standard Form (SF) 1442, Solicitation, Offer and Award (Construction, Alteration, or Repair), for construction contracts (see 36.701(b)). For acquisitions of commercial items not expected to exceed $5 million, contracting officers may use any appropriate combination of the procedures in parts 12, 13, 14 and 15 (see 13.103(c)).

* * * * *

17. Section 13.104 is amended by revising paragraph (b) to read as follows:

13.104 Procedures.

* * * * *

(b) Related items (such as small hardware items or spare parts for vehicles) may be included in one solicitation and the award made on an ''all-or none'' or ''multiple award'' basis if suppliers are so advised when quotations or offers are requested.

* * * * *

18. Section 13.106–2 is amended by revising paragraphs (a)(1) through (a)(3), (a)(4) introductory text, (a)(5), (a)(6), (b)(1), (b)(3), (c)(1), (c)(2), (d)(3) and (d)(4)(ii); redesignating (a)(6) through (8) as (a)(7) through (9), respectively; and by adding new (a)(6), and (a)(10) to read as follows:

13.106–2 Purchases exceeding the micro-purchase threshold.

(a) *Soliciting competition.* (1) Contracting officers shall promote competition to the maximum extent practicable to obtain supplies and services from the source whose offer is the most advantageous to the Government, based, as appropriate, on either price alone or price and other factors (*e.g.*, past performance and quality) including the administrative cost of the purchase. Contracting officers are encouraged to use best value. Solicitations shall notify suppliers of the basis upon which award is to be made.

(2) For acquisitions not exceeding the simplified acquisition threshold where FACNET is not available, or an exemption set forth in 4.506 applies, quotations may be solicited through other appropriate means (e.g., orally, or in writing). The contracting officer shall comply with the requirements of 5.101 when not soliciting via FACNET. When a synopsis is required, sufficient information to permit suppliers to develop quotations or offers may be incorporated into a combined synopsis/solicitation. In such cases, the contracting officer is not required to issue a separate solicitation. For commercial item acquisitions, also see 12.603.

(3) For acquisitions not exceeding $25,000, requests for quotations should be solicited orally to the maximum extent practicable when FACNET is not available or a written determination has been made that it is not practicable or cost-effective to purchase via FACNET. Paper solicitations for contract actions not expected to exceed $25,000 should only be issued only when obtaining electronic or oral quotations is not considered economical or practicable. Written solicitations shall be issued for construction contracts over $2,000.

(4) If a synopsis is not required (*e.g.*, the acquisition does not exceed $25,000 or an exemption to the synopsis requirement applies) and FACNET is not being used, solicitation of at least three sources generally may be considered to promote competition to the maximum extent practicable. In such circumstances, maximum practicable competition ordinarily can be obtained without soliciting quotations or offers from sources outside the local trade area. If practicable, two sources not included in the previous solicitation should be requested to furnish quotations or offers. The following factors influence the number of quotations or offers required in connection with any particular purchase:

* * * * *

(5) For purchases not exceeding the simplified acquisition threshold, Contracting officers may solicit from one source if the contracting officer determines that the circumstances of the contract action deem only one source reasonably available.

(6) For sole source acquisitions of commercial items in excess of the simplified acquisition threshold conducted pursuant to subpart 13.6, the requirements at 13.602(a) apply.

(7) Contracting officers shall not limit competition to suppliers of well-known and widely distributed makes or brands (see 11.104), or solicit quotations or offers on a personal preference basis.

* * * * *

(10) Solicitations are not required to state the relative importance assigned to each evaluation factor and subfactor, nor are they required to include subfactors.

(b) *Evaluation of quotations or offers.* (1) When evaluating quotations or offers, the evaluation must be made on the basis established in the solicitation. All quotations or offers must be considered. However, the contracting officer has broad discretion in fashioning suitable evaluation procedures. The procedures prescribed in parts 14 and 15 are not mandatory. At the contracting officer's discretion, one or more, but not necessarily all, of the evaluation procedures in part 14 or 15 may be used. Formal evaluation plans, establishment of a competitive range, conduct of discussions, and scoring of quotes or offers are not required. Contracting offices may conduct comparative evaluations of offers. Evaluation of other factors, such as past performance, does not require the creation or existence of a formal data base, but may be based on such information as the contracting officer's knowledge of and previous experience with the item or service being purchased, customer surveys, or other reasonable basis.

* * * * *

(3) Contracting officers shall evaluate quotations or offers inclusive of transportation charges from the shipping point of the supplier to the delivery destination.

* * * * *

(c) *Award.* (1) Occasionally an item can be obtained only from a supplier that quotes a minimum order price or quantity that either unreasonably exceeds stated quantity requirements or results in an unreasonable price for the

quantities required. In these instances, the contracting officer should inform the requiring activity of all facts regarding the quotation or offer and ask it to confirm or alter its requirement. The file shall be documented to support the final action taken.

(2) For acquisitions not exceeding the simplified acquisition threshold, except for awards conducted through FACNET, notification to unsuccessful suppliers shall be given only if requested.

* * * * *

(d) * * *

(3) If only one source is solicited and the acquisition does not exceed the simplified acquisition threshold, an additional notation shall be made to explain the absence of competition, except for acquisition of utility services available only from one source.

(4) * * *

(ii) *Written solicitations (see 2.101).* For acquisitions not exceeding the simplified acquisition threshold, written records of solicitations/offers may be limited to notes or abstracts to show prices, delivery, references to printed price lists used, the supplier or suppliers contacted, and other pertinent data.

* * * * *

19. Section 13.107 is amended by revising paragraph (a) to read as follows:

13.107 Solicitation forms.

(a) For use of the SF 1449, Solicitation/Contract/Order for Commercial Items, see 12.204.

* * * * *

20. Section 13.202 is amended by revising paragraph (b)(2) to read as follows:

13.202 Establishment of blanket purchase agreements (BPAs).

* * * * *

(b) * * *

(2) Consider suppliers whose past performance has shown them to be dependable, and who offer quality supplies or services at consistently lower prices and who have provided numerous purchases at or below the simplified acquisition threshold.

* * * * *

21. Section 13.204 is amended by revising paragraphs (a) and (b) to read as follows:

13.204 Purchases under blanket purchase agreements.

(a) The use of a BPA does not authorize purchases that are not otherwise authorized by law or regulation. For example, the BPA, being a method of simplifying the making of individual purchases, shall not be used to avoid the simplified acquisition threshold, or $5,000,000 for acquisitions of commercial items conducted under subpart 13.6.

(b) Unless otherwise specified in agency regulations, individual purchases under BPAs, except those under BPAs established in accordance with 13.202(c)(3), shall not exceed the simplified acquisition threshold, or $5,000,000, for acquisitions of commercial items conducted under subpart 13.6.

* * * * *

22. Subpart 13.6, consisting of sections 13.601 and 13.602, is added to read as follows:

Subpart 13.6-Test Program for Certain Commercial Items

Sec.
13.601 General.
13.602 Special documentation requirements.

13.601 General.

(a) This subpart authorizes, as a test program, use of simplified procedures for the acquisition of supplies and services in amounts greater than the simplified acquisition threshold but not exceeding $5,000,000, including options, if the contracting officer reasonably expects, based on the nature of the supplies or services sought, and on market research, that offers will include only commercial items. Under this test program, contracting officers may use any simplified acquisition procedure in this part, subject to any specific dollar limitation applicable to the particular procedure. The purpose of this test program is to vest contracting officers with additional procedural discretion and flexibility, so that commercial item acquisitions in this dollar range may be solicited, offered, evaluated, and awarded in a simplified manner that maximizes efficiency and economy and minimizes burden and administrative costs for both the Government and industry (10 U.S.C. 2304(g) and 2305 and 41 U.S.C. 253(g) and 253a and 253b).

(b) For the period of this test, contracting activities shall employ the simplified procedures authorized by the test to the maximum extent practicable.

(c) When acquiring commercial items using the procedures in this part, the requirements of part 12 apply subject to the order of precedence provided at 12.102(c). This includes use of the provisions and clauses at subpart 12.3.

(d) The authority to issue solicitations under this subpart shall expire on January 1, 2000. Contracts may be awarded after the expiration of this authority for solicitations issued before the expiration of the authority.

13.602 Special documentation requirements.

(a) *Sole source acquisitions.* Acquisitions conducted under simplified acquisition procedures are exempt from the requirements in part 6. However, contracting officers shall not conduct sole source acquisitions, as defined in 6.003, under this subpart unless the need to do so is justified in writing and approved at the levels specified in paragraphs (a)(1) and (a)(2) of this section. Contracting officers shall prepare sole source justifications using the format at 6.303–2, modified to reflect an acquisition under the authority of the test program for commercial items (section 4202 of the Clinger-Cohen Act). Justifications and approvals are required under this subpart only for sole source acquisitions.

(1) For a proposed contract exceeding $100,000 but not exceeding $500,000, the contracting officer's certification that the justification is accurate and complete to the best of the contracting officer's knowledge and belief will serve as approval, unless a higher approval level is established in agency procedures.

(2) For a proposed contract exceeding $500,000, the approval shall be by the competition advocate for the procuring activity, designated pursuant to 6.501; or an official described in 6.304 (a)(3) or (a)(4). This authority is not delegable.

(b) *Contract file documentation.* The contract file shall include—

(1) A brief written description of the procedures used in awarding the contract, including the fact that the test procedures in FAR 13.6 were used;

(2) The number of offers received;

(3) An explanation, tailored to the size and complexity of the acquisition, of the basis for the contract award decision; and

(4) Any justification approved under paragraph (a) of this section.

[FR Doc. 96–33211 Filed 12–31–96; 8:45 am]
BILLING CODE 6820–EP–P

---

48 CFR Part 9

[FAC 90–45; FAR Case 96–320; Item VIII]

RIN 9000–AH47

Federal Acquisition Regulation; Compliance with Immigration and Nationality Act Provisions

AGENCIES: Department of Defense (DOD), General Services Administration (GSA), and National Aeronautics and Space Administration (NASA).

ACTION: Interim rule adopted as final rule.

SUMMARY: The Civilian Agency Acquisition Council and the Defense Acquisition Regulations Council have agreed to convert the interim rule published at 61 FR 41472, August 8, 1996, to a final rule without change. The rule amended the Federal Acquisition Regulation (FAR) to implement Executive Order 12989 of February 13, 1996, Economy and Efficiency in Government Procurement Through Compliance With Certain Immigration and Naturalization Act Provisions. This regulatory action was not subject to Office of Management and Budget review under Executive Order 12866, dated September 30, 1993, and is not a major rule under 5 U.S.C. 804.

EFFECTIVE DATE: January 1, 1997.

FOR FURTHER INFORMATION CONTACT: Mr. Paul L. Linfield at (202) 501–1757 in reference to this FAR case. For general information, contact the FAR Secretariat, Room 4037, GS Building, Washington, DC 20405, (202) 501–4755. Please cite FAC 90–45, FAR case 96–320.

SUPPLEMENTARY INFORMATION:

A. Background

This final rule implements Executive Order 12989 of February 13, 1996, which provides that a contractor may be debarred upon a determination by the Attorney General that the contractor is not in compliance with the employment provisions of the Immigration and Nationality Act. No comments were received in response to the interim rule published on August 8, 1996.

B. Regulatory Flexibility Act

The Department of Defense, the General Services Administration, and the National Aeronautics and Space Administration certify that this final rule will not have a significant economic impact on a substantial number of small entities within the meaning of the Regulatory Flexibility Act, 5 U.S.C. 601, *et seq.*, because only a small number of Federal contractors are likely to be the subject of a determination by the Attorney General that they are not in compliance with the employment provisions of the Immigration and Nationality Act.

C. Paperwork Reduction Act

The Paperwork Reduction Act does not apply because the final rule does not impose recordkeeping or information collection requirements, which require the approval of the Office of Management and Budget under 44 U.S.C. 3501, *et seq.*

List of Subjects in 48 CFR Part 9

Government procurement.

Dated: December 24, 1996.

Edward C. Loeb,

Director, Federal Acquisition Policy Division.

Interim Rule Adopted as Final

The interim rule published as Item II of FAC 90–41 (61 FR 41472, August 8, 1996) is converted to a final rule without change. The rule amended FAR 9.406 to specify that a contractor may be debarred upon a determination by the Attorney General that the contractor is not in compliance with the employment provisions of the Immigration and Nationality Act.

The authority citation for 48 CFR Part 9 continues to read as follows:

Authority: 40 U.S.C. 486(c); 10 U.S.C. chapter 137; and 42 U.S.C. 2473(c).

[FR Doc. 96–33212 Filed 12–31–96; 8:45 am]

BILLING CODE 6820–EP–P

---

48 CFR Part 25

[FAC 90–45; FAR Case 96–017; Item IX]

RIN 9000–AH48

Federal Acquisition Regulation; Caribbean Basin and Designated Countries

AGENCIES: Department of Defense (DOD), General Services Administration (GSA), and National Aeronautics and Space Administration (NASA).

ACTION: Final rule.

SUMMARY: The Civilian Agency Acquisition Council and the Defense Acquisition Regulations Council have agreed on a final rule to amend the Federal Acquisition Regulation (FAR) to update the lists of Caribbean Basin countries and designated countries included in the definitions at FAR 25.401. This regulatory action was not subject to Office of Management and Budget review under Executive Order 12866, dated September 30, 1993, and is not a major rule under 5 U.S.C. 804.

EFFECTIVE DATE: January 1, 1997.

FOR FURTHER INFORMATION CONTACT: Mr. Paul Linfield at (202) 501–1757 in reference to this FAR case. For general information, contact the FAR Secretariat, Room 4035, GS Building, Washington, DC 20405 (202) 501–4755. Please cite FAC 90–45, FAR case 96–0174.

SUPPLEMENTARY INFORMATION:

A. Background

As directed by the Office of the United States Trade Representative, this final rule updates the lists of Caribbean Basin countries and designated countries included in the definitions at FAR 25.401. Haiti, Nicaragua, and Panama are added to the list of Caribbean Basin countries. Ten least-developed countries are added to the list of designated countries pursuant to Section 504(c)(6) of the Trade Act of 1974, as amended. In addition, Singapore is added as a designated country pursuant to Section 1–101 of Executive Order 12260 (61 FR 11233, March 19, 1996). The designation of Singapore does not apply to procurements by the Department of Energy, the Department of Transportation, the Army Corps of Engineers, the Tennessee Valley Authority, or the Bureau of Reclamation.

Sudan is removed from the list of designated countries because the Acting U.S. Trade Representative has withdrawn the designation of Sudan under the Trade Agreements Act of 1979, as amended, in light of the political situation in Sudan and the lack of normal economic relations between the United States and Sudan.

B. Regulatory Flexibility Act

The final rule does not constitute a significant FAR revision within the meaning of FAR 1.501 and Public Law 98–577, and publication for public comments is not required. However, comments from small entities concerning the affected FAR subpart will be considered in accordance with 5 U.S.C. 610. Such comments must be submitted separately and cite 5 U.S.C. 601, *et seq.* (FAC 90–45, FAR case 96–017), in correspondence.

C. Paperwork Reduction Act

The Paperwork Reduction Act does not apply because the changes to the FAR do not impose recordkeeping or information collection requirements, or collections of information from offerors, contractors, or members of the public which require the approval of the Office of Management and Budget under 44 U.S.C. 3501, *et seq.*

List of Subjects in 48 CFR Part 25

Government procurement.

Dated: December 24, 1996.

Edward C. Loeb,

Director, Federal Acquisition Policy Division.

Therefore, 48 CFR Part 25 is amended as set forth below:

PART 25—FOREIGN ACQUISITION

1. The authority citation for 48 CFR Part 25 continues to read as follows:

Authority: 40 U.S.C. 486(c); 10 U.S.C. chapter 137; and 42 U.S.C. 2473(c).

2. Section 25.401 is amended by revising the definitions ''Caribbean Basin country'' and ''Designated country'' to read as follows:

25.401 Definitions.

* * * * *

Caribbean Basin country, as used in this subpart, means a country designated by the President as a beneficiary under the Caribbean Basin Economic Recovery Act (19 U.S.C. 2701, et seq.) and listed as follows:

Antigua and Barbuda
Aruba
Bahamas
Barbados
Belize
British Virgin Islands
Costa Rica
Dominica
Dominican Republic
El Salvador
Grenada
Guatemala
Guyana
Haiti
Honduras
Jamaica
Montserrat
Netherlands Antilles
Nicaragua
Panama
St. Kitts and Nevis
St. Lucia
St. Vincent and the Grenadines
Trinidad and Tobago

* * * * *

Designated country, as used in this subpart, means a country or instrumentality designated under the Trade Agreements Act of 1979 and listed as follows:

Aruba
Austria
Bangladesh
Belgium
Benin
Bhutan
Botswana
Burkina Faso
Burundi
Canada
Cape Verde
Central African Republic
Chad
Comoros
Denmark
Djibouti
Equatorial Guinea
Finland
France
Gambia
Germany
Greece
Guinea
Guinea-Bissau
Haiti
Ireland
Israel
Italy
Japan
Kiribati
Lesotho
Liechtenstein
Luxembourg
Malawi
Maldives
Mali
Mozambique
Nepal
Netherlands
Niger
Norway
Portugal
Republic of Korea
Rwanda
Sao Tome and Principe
Sierra Leone
Singapore
Somalia
Spain
Sweden
Switzerland
Tanzania U.R.
Togo
Tuvalu
Uganda
United Kingdom
Vanuatu
Western Samoa
Yemen

[FR Doc. 96–33213 Filed 12–31–96; 8:45 am]

BILLING CODE 6820–EP–P

---

48 CFR Part 25

[FAC 90–45; FAR Case 96–020; Item X]

RIN 9000–AH49

Federal Acquisition Regulation; Caribbean Basin Country End Products—Renewal of Treatment as Eligible

AGENCIES: Department of Defense (DOD), General Services Administration (GSA), and National Aeronautics and Space Administration (NASA).

ACTION: Final rule.

SUMMARY: The Civilian Agency Acquisition Council and the Defense Acquisition Regulations Council have amended the Federal Acquisition Regulation (FAR) to implement the extension by the U.S. Trade Representative of the date of eligibility under the Trade Agreements Act for products of Caribbean Basin countries. This regulatory action was not subject to Office of Management and Budget review under Executive Order 12866, dated September 30, 1993, and is not a major rule under 5 U.S.C. 804.

EFFECTIVE DATE: January 1, 1997.

FOR FURTHER INFORMATION CONTACT: Mr. Paul L. Linfield at (202) 501–1757 in reference to this FAR case. For general information, contact the FAR Secretariat, Room 4037, GS Building, Washington, DC 20405, (202) 501–4755. Please cite FAC 90–45, FAR case 96–020.

SUPPLEMENTARY INFORMATION:

A. Background

FAR 25.404(b) provides that products of Caribbean Basin countries which are eligible for duty-free treatment under the Caribbean Basin Economic Recovery Act shall be treated as eligible products under the Trade Agreements Act. This final rule extends the eligibility date from September 30, 1996, to September 30, 1997, except that for products of Panama, the date is extended through September 30, 1998, in accordance with the notice published by the U.S. Trade Representative on September 30, 1996 (61 FR 51134).

B. Regulatory Flexibility Act

The final rule does not constitute a significant FAR revision within the meaning of FAR 1.501 and Public Law 98–577, and publication for public comments is not required. However, comments from small entities concerning the affected FAR subpart will be considered in accordance with 5 U.S.C. 610. Such comments must be submitted separately and cite 5 U.S.C. 601, *et seq.* (FAC 90–45, FAR case 96–020), in correspondence.

C. Paperwork Reduction Act

The Paperwork Reduction Act does not apply because the changes to the FAR do not impose recordkeeping or information collection requirements, or collections of information from offerors, contractors, or members of the public which require the approval of the Office of Management and Budget under 44 U.S.C. 3501, *et seq.*

List of Subjects in 48 CFR Part 25

Government procurement.

Dated: December 24, 1996.

Edward C. Loeb,

Director, Federal Acquisition Policy Division.

Therefore, 48 CFR Part 25 is amended as set forth below:

PART 25—FOREIGN ACQUISITION

1. The authority citation for 48 CFR Part 25 continues to read as follows:

Authority: 40 U.S.C. 486(c); 10 U.S.C. chapter 137; and 42 U.S.C. 2473(c).

2. Section 25.402(b) is revised to read as follows:

25.402 Policy.

* * * * *

(b) The U.S. Trade Representative has determined that in order to promote further economic recovery of the Caribbean Basin countries (as defined in 25.401), products originating in those countries which are eligible for duty-free treatment under the Caribbean Basin Economic Recovery Act shall be treated as eligible products for the purposes of this subpart. Except for products of Panama, this determination is effective until September 30, 1997. For products of Panama, this determination is effective until September 30, 1998. These dates may be extended by the U.S. Trade Representative by means of a notice in the Federal Register.

* * * * *

[FR Doc. 96–33214 Filed 12–31–96; 8:45 am]

BILLING CODE 6820–EP–P

48 CFR Part 31

[FAC 90–45; FAR Case 96–325; Item XI]

RIN 9000–AH50

Federal Acquisition Regulation; Compensation of Certain Contractor Personnel

AGENCIES: Department of Defense (DOD), General Services Administration (GSA), and National Aeronautics and Space Administration (NASA).

ACTION: Interim rule with request for comment.

SUMMARY: The Civilian Agency Acquisition Council and the Defense Acquisition Regulations Council have agreed to an interim rule amending the Federal Acquisition Regulation (FAR) to implement Section 809 of the Fiscal Year 1997 National Defense Authorization Act (Pub. L. 104–201) by placing a Governmentwide ceiling on allowable compensation costs for contractor personnel in senior management positions under contracts that are awarded during fiscal year 1997. This regulatory action was not subject to Office of Management and Budget review under Executive Order 12866, dated September 30, 1993, and is not a major rule under 5 U.S.C. 804.

DATES: *Effective Date*: January 1, 1997.

Comment Date: Comments should be submitted to the FAR Secretariat at the address shown below on or before March 3, 1997 to be considered in the formulation of a final rule.

ADDRESSES: Interested parties should submit written comments to: General Services Administration, FAR Secretariat (VRS),–18th & F Streets, NW, Room 4035, Attn: Ms. Beverly Fayson, Washington, DC 20405. Please cite FAC 90–45, FAR case 96–325 in all correspondence related to this case.

FOR FURTHER INFORMATION CONTACT: Mr. Ralph DeStefano at (202) 501–1758 in reference to this FAR case. For general information, contact the FAR Secretariat, Room 4037, GS Building, Washington, DC 20405 (202) 501–4755. Please cite FAC 90–45, FAR case 96–325.

SUPPLEMENTARY INFORMATION:

A. Background

Section 809 of the Fiscal Year 1997 National Defense Authorization Act (Pub. L. 104–201) limits, during fiscal year 1997, allowable compensation costs to $250,000 per year for contractor personnel in senior management positions. Section 809 defines ''compensation'' as the total amount of wages and elective deferrals for the year concerned, as these terms are defined in Sections 3401(a) and 402(g)(3), respectively, of the Internal Revenue Code of 1986. Section 809 also limits the application of the compensation ceiling to an ''officer'' of a company ''who is determined to be in a senior management position as established by regulation.'' The interim rule defines an ''officer in a senior management position'' as the contractor's Chief Executive Officer (CEO), or any individual acting in a similar capacity, and the contractor's four most highly compensated officers in senior management positions, other than the CEO. This definition is consistent with the standard employed by the United States Securities and Exchange Commission (SEC) in its executive compensation disclosure rules. The SEC requires that publicly traded companies disclose to their stockholders the compensation of the CEO (or any individual acting in a similar capacity) as well as that of their four most highly paid senior executive officers, other than the CEO, who earn more than $100,000 per year in salary and bonus.

The interim FAR rule adds a new requirement at 31.205–6(p) to implement the statutory ceiling on allowable compensation costs for officers in senior management positions. This restriction applies to contracts awarded during fiscal year 1997, for compensation costs of certain contractor personnel that are incurred during fiscal year 1997, and that are in excess of $250,000 per year. This restriction also applies to the five most highly compensated individuals in senior management positions at intermediate home offices and/or segments if a contractor is organizationally subdivided into such units.

B. Regulatory Flexibility Act

The interim rule is not expected to have a significant economic impact on a substantial number of small entities within the meaning of the Regulatory Flexibility Act, 5 U.S.C. 601, *et seq.*, because most contracts awarded to small entities use simplified acquisition procedures or are awarded on a competitive, fixed-price basis, and do not require application of the cost principle contained in this rule. In addition, this rule is limited to businesses that incur costs prior to October 1, 1997, under contracts awarded during fiscal year 1997, for compensation in excess of $250,000 per year for an officer in a senior management position. An Initial Regulatory Flexibility Analysis has, therefore, not been performed. Comments are invited from small businesses and other interested parties. Comments from small entities concerning the affected FAR subpart also will be considered in accordance with 5 U.S.C. 610. Such comments must be submitted separately and cite 5 U.S.C 601, *et seq.* (FAR Case 96–325), in correspondence.

C. Paperwork Reduction Act

The Paperwork Reduction Act does not apply because the changes to the FAR do not impose recordkeeping or information collection requirements, or collections of information from offerors, contractors, or members of the public which require the approval of OMB under 44 U.S.C. 3501, et seq.

D. Determination to Issue an Interim Rule

A determination has been made under the authority of the Secretary of Defense (DOD), the Administrator of General Services (GSA), and the Administrator of the National Aeronautics and Space Administration (NASA) that urgent and compelling reasons exist to promulgate this interim rule without prior opportunity for public comment. This action is necessary to ensure that contracting activities become aware of the statutory ceiling on allowable compensation costs for certain contractor personnel when forward pricing contracts to be awarded during fiscal year 1997. This rule implements Section 809 of the Fiscal Year 1997 National Defense Authorization Act (Pub. L. 104–201) and applies to Governmentwide contracts awarded during fiscal year 1997. However, pursuant to Public Law 98–577 and FAR

1.501, public comments received in response to this interim rule will be considered in the formation of the final rule.

List of Subjects in 48 CFR Part 31

Government procurement.

Dated: December 24, 1996.

Edward C. Loeb,

Director, Office of Federal Acquisition Policy.

Therefore, 48 CFR Part 31 is amended as set forth below:

PART 31—CONTRACT COST PRINCIPLES AND PROCEDURES

1. The authority citation for 48 CFR Part 31 continues to read as follows:

Authority: 40 U.S.C. 486(c); 10 U.S.C. chapter 137; and 42 U.S.C. 2473(c).

2. Section 31.205–6 is amended by adding paragraph (p) to read as follows:

31.205–6 Compensation for personal services.

* * * * *

(p) *Limitation on allowability of compensation for certain contractor personnel.* (1) For contracts awarded during fiscal year 1997, costs incurred from October 1, 1996, through September 30, 1997, for compensation of an officer in a senior management position in excess of $250,000 per year are unallowable (Section 809 of Public Law 104–201).

(2) As used in this paragraph:

(i) *Compensation* means—

(A) The total amount of taxable wages paid to the employee for the year concerned; plus

(B) The total amount of elective deferred compensation earned by the employee in the year concerned.

(ii) *Officer in a senior management position means*—

(A) The contractor's Chief Executive Officer (CEO) or any individual acting in a similar capacity;

(B) The contractor's four most highly compensated officers in senior management positions, other than the CEO; and

(C) If the contractor is organizationally subdivided into intermediate home offices and/or segments, the five most highly compensated individuals in senior management positions at each such intermediate home office and/or segment.

[FR Doc. 96–33215 Filed 12–31–96; 8:45 am]

BILLING CODE 6820–EP–P

48 CFR Part 33

[FAC 90–45; FAR Case 95–309; Item XII]

RIN 9000–AH10

Federal Acquisition Regulation; Agency Procurement Protests

AGENCIES: Department of Defense (DOD), General Services Administration (GSA), and National Aeronautics and Space Administration (NASA).

ACTION: Final rule.

SUMMARY: The Civilian Agency Acquisition Council and the Defense Acquisition Regulations Council have agreed on a final rule to amend the Federal Acquisition Regulation (FAR) to provide for informal, procedurally simple, and inexpensive resolution of protests. This final rule implements Executive Order 12979, Agency Procurement Protests. This regulatory action was not subject to Office of Management and Budget review under Executive Order 12866, dated September 30, 1993, and is not a major rule under 5 U.S.C. 804.

EFFECTIVE DATE: March 3, 1997.

FOR FURTHER INFORMATION CONTACT: Mr. Jack O'Neill at (202) 501–3856 in reference to this FAR case. For general information, contact the FAR Secretariat, Room 4035, GS Building, Washington, DC 20405, (202) 501–4755. Please cite FAC 90–45, FAR case 95–309.

SUPPLEMENTARY INFORMATION:

A. Background

This final rule revises the agency procurement protest procedures at FAR 33.103 to implement Executive Order 12979 of October 25, 1995, Agency Procurement Protests (60 FR 55171, October 27, 1995). An interim rule was published in the Federal Register at 61 FR 39219, July 26, 1996. Six sources submitted public comments. All comments, including comments from GAO, were considered in developing the final rule.

B. Regulatory Flexibility Act

A Final Regulatory Flexibility Analysis (FRFA) has been performed. A copy of the FRFA may be obtained from the FAR Secretariat. The analysis is summarized as follows:

This rule implements Executive Order 12979, Agency Procurement Protests, which requires the heads of the executive departments and agencies engaged in the procurement of supplies and services to prescribe administrative procedures for the resolution of procurement protests as an alternative to protests in a forum outside the procuring agencies. There were no public comments received in response to the Initial Regulatory Flexibility Analysis. Several changes were made as a result of public comments in response to the interim rule. The time to file a protest was reduced from 14 to 10 days after the basis of protest is known, or should be known, to conform with revisions to General Accounting Office protest procedures. The rule was revised to clarify that agencies may designate an official, other than the contracting officer, to receive protests. Agencies may also designate whether a review of a protest by an official other than the contracting officer is instead of, or in addition to, review of the protest by the contracting officer. The rule was revised to permit agencies to exchange information with a protester while considering the protest.

The rule will apply to all actual or potential bidders or offerors, large and small, whose direct economic interests would be affected by the award or failure to award a Government contract. The number of small entities to which the rule will apply is estimated to be between 35,000 and 45,000. This rule does not impose any reporting, recordkeeping, or other compliance requirements.

This rule is expected to have a beneficial impact on small entities by prescribing informal, procedurally simple, and inexpensive means to resolve protests. The rule encourages the use of alternative dispute resolution techniques, third party neutrals, and another agency's personnel as alternative protest resolution methods.

C. Paperwork Reduction Act

The Paperwork Reduction Act does not apply because the changes to the FAR do not impose recordkeeping or information collection requirements, or collections of information from offerors, contractors, or members of the public which require the approval of the Office of Management and Budget under 44 U.S.C. 3501, *et seq.*

List of Subjects in 48 CFR Part 33

Government procurement.

Dated: December 24, 1996.

Edward C. Loeb,

Director, Federal Acquisition Policy Division.

Therefore, 48 CFR Part 33 is amended as set forth below:

PART 33—PROTESTS, DISPUTES, AND APPEALS

1. The authority citation for 48 CFR Part 33 continues to read as follows:

Authority: 40 U.S.C. 486(c); 10 U.S.C. chapter 137; and 42 U.S.C. 2473(c).

2. Section 33.103 is amended—

a. in paragraph (c) by removing ''and permitted by law'';

b. by revising paragraphs (d)(2)(i) and (d)(4);

c. in paragraph (e) by revising ''14 days'' to read ''10 days'';

d. in the first sentence of paragraphs (f)(1) and (f)(2) by inserting the word ''agency'' after the word ''pending'';

e. by adding paragraph (f)(4); and

f. by revising paragraphs (g) and (h) to read as follows:

33.103 Protests to the agency.

* * * * *

(d) * * *

(2) Protests shall include the following information:

(i) Name, address, and fax and telephone numbers of the protester.

* * * * *

(4) In accordance with agency procedures, interested parties may request an independent review of their protest at a level above the contracting officer; solicitations should advise potential bidders and offerors that this review is available. Agency procedures and/or solicitations shall notify potential bidders and offerors whether this independent review is available as an alternative to consideration by the contracting officer of a protest or is available as an appeal of a contracting officer decision on a protest. Agencies shall designate the official(s) who are to conduct this independent review, but the official(s) need not be within the contracting officer's supervisory chain. When practicable, officials designated to conduct the independent review should not have had previous personal involvement in the procurement. If there is an agency appellate review of the contracting officer's decision on the protest, it will not extend GAO's timeliness requirements. Therefore, any subsequent protest to the GAO must be filed within 10 days of knowledge of initial adverse agency action (4 CFR 21.2(a)(3)).

* * * * *

(f) * * *

(4) Pursuing an agency protest does not extend the time for obtaining a stay at GAO. Agencies may include, as part of the agency protest process, a voluntary suspension period when agencies protests are denied and the protester subsequently files at GAO.

(g) Agencies shall make their best efforts to resolve agency protests within 35 days after the protest is filed. To the extent permitted by law and regulation, the parties may exchange relevant information.

(h) Agency protest decisions shall be well-reasoned, and explain the agency position. The protest decision shall be provided to the protester using a method that provides evidence of receipt.

[FR Doc. 96–33216 Filed 12–31–96; 8:45 am]

[BILLING CODE 6820–EP–P

48 CFR Parts 1, 5, 14, and 36

[FAC 90–45; FAR Case 96–305; Item XIII]

RIN 9000-–AH17

Federal Acquisition Regulation; Two-Phase Design Build Selection Procedures

AGENCIES: Department of Defense (DOD), General Services Administration (GSA), and National Aeronautics and Space Administration (NASA).

ACTION: Final rule.

SUMMARY: The Civilian Agency Acquisition Council and the Defense Acquisition Regulations Council have agreed on a final rule to amend the Federal Acquisition Regulation (FAR) to implement Section 4105 of the Clinger-Cohen Act of 1996 (Public Law 104–106), which authorizes the use of two-phase design-build procedures for construction contracting. This regulatory action was not subject to Office of Management and Budget review under Executive Order 12866, dated September 30, 1993, and is not a major rule under 5 U.S.C. 804.

EFFECTIVE DATE: January 1, 1997.

FOR FURTHER INFORMATION CONTACT: Mr. Jack O'Neill at (202) 501–3856 in reference to this FAR case. For general information, contact the FAR Secretariat, Room 4035, GS Building, Washington, DC 20405 (202) 501–4755. Please cite FAC 90–5, FAR case 96–305.

SUPPLEMENTARY INFORMATION:

A. Background

A proposed rule with request for public comment was published in the Federal Register at 61 FR 41212, August 7, 1996. Comments were received from 77 respondents. After analysis of the public comments and further consideration of the proposed language, the rule was revised at FAR 36.104, 36.301(b)(2), and 36.303–1 to more closely conform to the provisions of Section 4105 of Public Law 104–106. In addition, examples of phase-two evaluation factors have been added at FAR 36.303–(a).

B. Regulatory Flexibility Act

This final rule may have a significant economic impact on a substantial number of small entities within the meaning of the Regulatory Flexibility Act, 5 U.S.C. 601 *et seq.*, because the rule reduces the cost of proposal preparation for those offerors not selected for Phase Two, when two-phase design-build procedures are used. A Final Regulatory Flexibility Analysis (FRFA) has been prepared and is summarized as follows:

We estimate that approximately 1,465 small businesses responding to two-phase design-build solicitations annually may save proposal costs on an average of eight separate solicitations each. This final rule imposes no new reporting or recordkeeping requirements.

A copy of the FRFA will be provided to the Chief Counsel for Advocacy for the Small Business Administration. A copy of the FRFA may be obtained from the FAR Secretariat. Comments are invited. Comments from small entities concerning the affected FAR subpart will be considered in accordance with 5 U.S.C. 610. Such comments must be submitted separately and cite 5 U.S.C 601, *et seq.* (FAR Case 96–305), in correspondence.

C. Paperwork Reduction Act

The Paperwork Reduction Act does not apply because the changes to the FAR do not impose recordkeeping or information collection requirements, or collections of information from offerors, contractors, or members of the public which require the approval of the Office of Management and Budget under 44 U.S.C. 3501, *et seq.*

List of Subjects in 48 CFR Parts 1, 5, 14, and 36

Government procurement.

Dated: December 24, 1996.

Edward C. Loeb,

Director, Federal Acquisition Policy Division.

Therefore, 48 CFR Parts 1, 5, 14, and 36 is amended as set forth below:

1. The authority citation for 48 CFR Parts 1, 5, 14, and 36 continues to read as follows:

Authority: 40 U.S.C. 486(c); 10 U.S.C. chapter 137; and 42 U.S.C. 2473(c).

PART 1—FEDERAL ACQUISITION REGULATION SYSTEM

1.106 [Amended]

2. Section 1.106 is amended in the list following the introductory paragraph by removing the FAR segment ''36.302'' and inserting ''36.213–2''.

PART 5—PUBLICIZING CONTRACT ACTIONS

3. Section 5.204 is amended by revising the first sentence to read as follows:

5.204 Presolicitation notices.

Contracting officers shall publicize presolicitation notices in the CBD (see 15.404 and 36.213–2). * * *

PART 14—SEALED BIDDING

4. Section 14.202–1 is amended in paragraph (a) by revising the first parenthetical to read as follows:

14.202–1 Bidding time.

(a) * * * (For construction contracts, see 36.213–3(a)). * * *

* * * * *

5. Section 14.211 is amended by revising the first sentence of paragraph (a) to read as follows:

14.211 Release of acquisition information.

(a) *Before solicitation.* Information concerning proposed acquisitions shall not be released outside the Government before solicitation except for presolicitation notices in accordance with 14.205–4(c) or 36.213–2, or long-range acquisition estimates in accordance with 5.404, or synopses in accordance with 5.201. * * *

* * * * *

PART 36—CONSTRUCTION AND ARCHITECT-ENGINEER CONTRACTS

6. Section 36.102 is amended by adding, in alphabetical order, the definitions ''Design'', ''Design-bid-build'', ''Design-build'', and ''Two-phase design-build selection procedures'' to read as follows:

36.102 Definitions.

* * * * *

Design, as used in this part, means defining the construction requirement (including the functional relationships and technical systems to be used, such as architectural, environmental, structural, electrical, mechanical, and fire protection), producing the technical specifications and drawings, and preparing the construction cost estimate.

Design-bid-build, as used in this part, means the traditional delivery method where design and construction are sequential and contracted for separately with two contracts and two contractors.

Design-build, as used in this part, means combining design and construction in a single contract with one contractor.

* * * * *

Two-phase design-build selection procedures, as used in this part, is a selection method in which a limited number of offerors (normally five or fewer) is selected during Phase One to submit detailed proposals for Phase Two (see subpart 36.3).

7. Section 36.104 is added to read as follows:

36.104 Policy.

Unless the traditional acquisition approach of design-bid-build established under the Brooks Architect-Engineers Act (41 U.S.C. 541, *et seq.*) or another acquisition procedure authorized by law is used, the contracting officer shall use the two-phase selection procedures authorized by 10 U.S.C. 2305a or 41 U.S.C. 253m when entering into a contract for the design and construction of a public building, facility, or work, if the contracting officer makes a determination that the procedures are appropriate for use (see subpart 36.3). Other acquisition procedures authorized by law include the procedures established in this part and other parts of this chapter and, for DoD, the design-build process described in 10 U.S.C. 2862.

Subpart 36.3 [Redesignated as 36.213 and Amended]

36.301–36.304 [Redesignated as 36.213–1—36.213–4]

8. Subpart 36.3 is redesignated as section 36.213 and the heading is revised to read ''Special procedures for sealed bidding in construction contracting.''; and sections 36.301 through 36.304 are redesignated as 36.213–1 through 36.213–4, respectively.

Subpart 36.4 [Removed]

36.401 [Removed]

36.402 [Redesignated as 36.214]

36.403 [Redesignated as 36.215]

9. Subpart heading 36.4 and section 36.401 are removed; and sections 36.402 and 36.403 are redesignated as 36.214 and 36.215, respectively, and the section headings revised to read as follows:

36.214 Special procedures for price negotiation in construction contracting.

36.215 Special procedure for cost-reimbursement contracts for construction.

10. Subpart 36.3, consisting of sections 36.300 through 36.303–2, is added to read as follows:

Subpart 36.3—Two-Phase Design-Build Selection Procedures

Sec.

36.300 Scope of subpart.
36.301 Use of two-phase design-build selection procedures.
36.302 Scope of work.
36.303 Procedures.
36.303–1 Phase One.
36.303–2 Phase Two.

Subpart 36.3—Two-Phase Design-Build Selection Procedures

36.300 Scope of subpart.

This subpart prescribes policies and procedures for the use of the two-phase design-build selection procedures authorized by 10 U.S.C. 2305a and 41 U.S.C. 253m.

36.301 Use of two-phase design-build selection procedures.

(a) During formal or informal acquisition planning (see part 7), if considering the use of two-phase design-build selection procedures, the contracting officer shall conduct the evaluation in paragraph (b) of this section.

(b) The two-phase design-build selection procedures shall be used when the contracting officer determines that this method is appropriate, based on the following:

(1) Three or more offers are anticipated.

(2) Design work must be performed by offerors before developing price or cost proposals, and offerors will incur a substantial amount of expense in preparing offers.

(3) The following criteria have been considered:

(i) The extent to which the project requirements have been adequately defined.

(ii) The time constraints for delivery of the project.

(iii) The capability and experience of potential contractors.

(iv) The suitability of the project for use of the two-phase selection method.

(v) The capability of the agency to manage the two-phase selection process.

(vi) Other criteria established by the head of the contracting activity.

36.302 Scope of work.

The agency shall develop, either in-house or by contract, a scope of work that defines the project and states the Government's requirements. The scope of work may include criteria and preliminary design, budget parameters, and schedule or delivery requirements. If the agency contracts for development of the scope of work, the procedures in subpart 36.6 shall be used.

36.303 Procedures.

One solicitation may be issued covering both phases, or two solicitations may be issued in sequence. Proposals will be evaluated in Phase One to determine which offerors will submit proposals for Phase Two. One contract will be awarded using competitive negotiation.

36.303–1 Phase One.

(a) Phase One of the solicitation(s) shall includ—

(1) The scope of work;

(2) The phase-one evaluation factors, including—

(i) Technical approach (but not detailed design or technical information);

(ii) Technical qualifications, such as—

(A) Specialized experience and technical competence;

(B) Capability to perform;

(C) Past performance of the offeror's team (including the architect-engineer and construction members); and

(iii) Other appropriate factors (excluding cost or price related factors, which are not permitted in Phase One);

(3) Phase-two evaluation factors (see 36.303–2); and

(4) A statement of the maximum number of offerors that will be selected to submit phase-two proposals. The maximum number specified shall not exceed five unless the contracting officer determines, for that particular solicitation, that a number greater than five is in the Government's interest and is consistent with the purposes and objectives of two-phase design-build contracting).

(b) After evaluating phase-one proposals, the contracting officer shall select the most highly qualified offerors (not to exceed the maximum number specified in the solicitation in accordance with 36.303–1(a)(4)) and request that only those offerors submit phase-two proposals.

36.303–2 Phase Two.

(a) Phase Two of the solicitation(s) shall be prepared in accordance with part 15, and include phase-two evaluation factors, developed in accordance with 15.605. Examples of potential phase-two technical evaluation factors include design concepts, management approach, key personnel, and proposed technical solutions.

(b) Phase Two of the solicitation(s) shall require submission of technical and price proposals, which shall be evaluated separately, in accordance with part 15.

11. Subpart 36.4 is added and reserved to read as follows:

Subpart 36.4—Commercial Practices [Reserved]

[FR Doc. 96–33217 Filed 12–31–96; 8:45 am]

BILLING CODE 6820–-EP

48 CFR Parts 39 and 52

[FAC 90–45; FAR Case 96–607; Item XIV]

RIN 9000–AH51

Federal Acquisition Regulation; Year 2000 Compliance

AGENCIES: Department of Defense (DOD), General Services Administration (GSA), and National Aeronautics and Space Administration (NASA).

ACTION: Interim rule with request for comments.

SUMMARY: The Civilian Agency Acquisition Council and the Defense Acquisition Regulations Council are amending the FAR on an interim basis to increase awareness of Year 2000 procurement issues and to ensure that solicitations and contracts address Year 2000 issues. This regulatory action was not subject to Office of Management and Budget review under Executive Order 12866, dated September 30, 1993, and is not a major rule under 5 U.S.C. 804.

DATES: *Effective Date:* January 1, 1997. *Comment Date:* Comments should be submitted to the FAR Secretariat at the address shown below on or before March 3, 1997 to be considered in the formulation of a final rule.

ADDRESSES: Interested parties should submit written comments to: General Services Administration, FAR Secretariat (MVR), 18th & F Streets, NW, Room 4035, Attn: Ms. Beverly Fayson, Washington, DC 20405. Please cite FAC 90–45, FAR case 96–607 in all correspondence related to this case.

FOR FURTHER INFORMATION CONTACT: Mr. Jack O'Neill, at (202) 501–3856 in reference to this FAR case. For general information, contact the FAR Secretariat, Room 4035, GS Building, Washington, DC 20405, (202) 501–4755. Please cite FAC 90–45, FAR case 96–607.

SUPPLEMENTARY INFORMATION:

A. Background

Many information technology systems will have operational difficulties due to the use of two-digit years in date representations. While commonly thought to be a problem of old legacy systems, it can also be a problem in information technology services and products that are for sale today.

At the recommendation of the Chief Information Officers Council and the interagency working group on the year 2000, the Federal Government intends to only acquire products that will work in the year 2000. This interim rule is intended to assist in the implementation of that intent. It provides a uniform approach and definition for addressing the year 2000 problem in the many, unique information technology acquisitions that will occur between now and the year 2000.

The rule defines the term ''year 2000 compliant.'' It also requires that agencies assure that when acquiring information technology which will be required to perform date/time processing involving dates subsequent to December 31, 1999, the solicitations and contracts either require year 2000 compliant technology, or require that non-compliant information technology be upgraded to be compliant in a timely manner. The rule also recommends that agency solicitations describe existing information technology that will be used with the information technology to be acquired and identify whether the existing information technology is Year 2000 compliant.

Additional information about the year 2000 problem and the activities of the interagency working group on the year 2000 can be found on the group's home page located at URL http://www.itpolicy.gsa.gov.

B. Regulatory Flexibility Act

The interim rule is not expected to have a significant economic impact on a substantial number of small entities within the meaning of the Regulatory Flexibility Act, 5 U.S.C. 601, et seq., because the rule primarily pertains to internal Government acquisition planning guidance regarding the acquisition of major systems of information technology. An Initial Regulatory Flexibility Analysis has, therefore, not been performed. Comments are invited from small businesses and other interested parties. Comments from small entities concerning the affected FAR part also will be considered in accordance with 5 U.S.C. 610. Such comments must be submitted separately and should cite FAR case 96–607 in correspondence.

C. Paperwork Reduction Act

The Paperwork Reduction Act does not apply because this interim rule does not impose recordkeeping or information collection requirements, or collections of information from offerors, contractors, or members of the public which require the approval of the Office of Management and Budget under 44 U.S.C. 3501, *et seq.*

D. Determination to Issue an Interim Rule

A determination has been made under the authority of the Secretary of Defense, the Administrator of General Services (GSA), and the Administrator

of the National Aeronautics and Space Administration that urgent and compelling reasons exist to promulgate this interim rule without prior opportunity for public comment. This action is necessary to ensure that Federal agencies do not procure non-compliant information technology products that would otherwise require premature replacement or costly repairs to make them Year 2000 compliant before December 31, 1999. However, pursuant to Public Law 98–577 and FAR 1.501, public comments received in response to this interim rule will be considered in the formation of the final rule.

List of Subjects in 48 CFR Parts 39 and 52

Government procurement.

Dated: December 24, 1996.

Edward C. Loeb,

Director, Federal Acquisition Policy Division.

Therefore, 48 CFR Parts 39 and 52 are amended as set forth below:

PART 39—ACQUISITION OF INFORMATION TECHNOLOGY

1. The authority citation for 48 CFR Parts 39 and 52 continues to read as follows:

Authority: 40 U.S.C. 486(c); 10 U.S.C. chapter 137; and 42 U.S.C. 2473(c).

2. Section 39.002 is amended by adding, in alphabetical order, the definition ''Year 2000 compliant'' to read as follows:

39.002 Definitions.

* * * * *

Year 2000 compliant means information technology that accurately processes date/time data (including, but not limited to, calculating, comparing, and sequencing) from, into, and between the twentieth and twenty-first centuries, and the years 1999 and 2000 and leap year calculations. Furthermore, Year 2000 compliant information technology, when used in combination with other information technology, shall accurately process date/time data if the other information technology properly exchanges date/time data with it.

39.106 [Redesignated as 39.107]

3. Section 39.106 is redesignated as 39.107, and a new section 39.106 is added to read as follows:

39.106 Year 2000 compliance.

When acquiring information technology that will be required to perform date/time processing involving dates subsequent to December 31, 1999, agencies shall ensure that solicitations and contracts—

(a)(1) Require the information technology to be Year 2000 compliant; or

(2) Require that non-compliant information technology be upgraded to be Year 2000 compliant prior to the earlier of

(i) the earliest date on which the information technology may be required to perform date/time processing involving dates later than December 31, 1999, or

(ii) December 31, 1999; and

(b) As appropriate, describe existing information technology that will be used with the information technology to be acquired and identify whether the existing information technology is Year 2000 compliant.

PART 52—SOLICITATION PROVISIONS AND CONTRACT CLAUSES

52.239–1 [Amended]

4. Section 52.239–1 is amended in the introductory text by revising ''39.106'' to read ''39.107''.

[FR Doc. 96–33218 Filed 12–31–96; 8:45 am]

BILLING CODE 6820–EP–P

---

48 CFR Part 42

[FAC 90–45; FAR Case 96–324; Item XV]

RIN 9000–AH52

Federal Acquisition Regulation; Limitation on Indirect Cost Audits

AGENCIES: Department of Defense (DOD), General Services Administration (GSA), and National Aeronautics and Space Administration (NASA).

ACTION: Final rule.

SUMMARY: The Civilian Agency Acquisition Council and the Defense Acquisition Regulations Council have agreed on a final rule to amend the Federal Acquisition Regulation (FAR) implementing Section 808 of the FY 97 Defense Authorization Act (Pub. L. 104–201), which expands required audit reciprocity among Federal agencies to include post-award audits. This regulatory action was not subject to Office of Management and Budget review under Executive Order 12866, dated September 30, 1993, and is not a major rule under 5 U.S.C. 804.

EFFECTIVE DATE: January 1, 1997.

FOR FURTHER INFORMATION CONTACT: Mr. Jerry Olson at (202) 501–3221 in reference to this FAR case. For general information, contact the FAR Secretariat, Room 4035, GS Building, Washington, DC 20405 (202) 501–4755. Please cite FAC 90–45, FAR case 96–324.

SUPPLEMENTARY INFORMATION:

A. Background

This FAR change implements Section 808 of the Fiscal Year 1997 National Defense Authorization Act (Public Law 104–201). Section 808 amends 10 U.S.C. 2313(d) and 41 U.S.C. 254d(d) to expand required audit reciprocity among Federal agencies to include post-award audits. Section 808 was effective September 23, 1996. 10 U.S.C. 2313(d) and 41 U.S.C. 254d(d) were added by the Federal Acquisition Streamlining Act of 1994, Sections 2201(a)(1) and 2251(a) (Public Law 103–355), to include reciprocity on pre-award audits.

B. Regulatory Flexibility Act

The final rule does not constitute a significant FAR revision within the meaning of FAR 1.501 and Public Law 98–577, and publication for public comments is not required. However, comments from small entities concerning the affected FAR subpart will be considered in accordance with 5 U.S.C. 610. Such comments must be submitted separately and cite 5 U.S.C. 601, *et seq.* (FAC 90–45, FAR case 96–324), in correspondence.

C. Paperwork Reduction Act

The Paperwork Reduction Act does not apply because the changes to the FAR do not impose recordkeeping or information collection requirements, or collections of information from offerors, contractors, or members of the public which require the approval of the Office of Management and Budget under 44 U.S.C. 3501, *et seq.*

List of Subjects in 48 CFR Part 42

Government procurement.

Dated: December 24, 1996.

Edward C. Loeb,

Director, Federal Acquisition Policy Division.

Therefore, 48 CFR Part 42 amended as set forth below:

PART 42—CONTRACT ADMINISTRATION

1. The authority citation for 48 CFR Part 42 continues to read as follows:

Authority: 40 U.S.C. 486(c); 10 U.S.C. chapter 137; and 42 U.S.C. 2473(c).

2. Section 42.703–1 is amended by revising paragraph (a) to read as follows:

42.703–1 Policy.

(a) A single agency (see 42.705–1(a)) shall be responsible for establishing indirect cost rates for each business unit. These rates shall be binding on all agencies and their contracting offices, unless otherwise specifically prohibited

by statute. An agency shall not perform an audit of indirect cost rates when the contracting officer determines that the objectives of the audit can reasonably be met by accepting the results of an audit that was conducted by any other department or agency of the Federal Government (10 U.S.C. 2313(d) and 41 U.S.C. 254d(d)).

* * * * *

[FR Doc. 96–33219 Filed 12–31–96; 8:45 am]

BILLING CODE 6820–EP–P

48 CFR Chapter 1

Federal Acquisition Regulation; Small Entity Compliance Guide

AGENCIES: Department of Defense (DOD), General Services Administration (GSA), and National Aeronautics and Space Administration (NASA).

ACTION: Small Entity Compliance Guide.

SUMMARY: This document is issued under the joint authority of the Secretary of Defense, the Administrator of General Services and the Administrator for the National Aeronautics and Space Administration as the Federal Acquisition Regulation (FAR) Council. This *Small Entity Compliance Guide* has been prepared in accordance with Section 212 of the Small Business Regulatory Enforcement Fairness Act of 1996 (Public Law 104–121). It consists of a summary of rules appearing in Federal Acquisition Circular (FAC) 90–45 which amend the FAR. The rules marked with an asterisk (*) are those for which a final regulatory flexibility analysis has been prepared in accordance with 5 U.S.C. 604. Further information regarding these rules may be obtained by referring to FAC 90–45 which precedes this notice. This document may be obtained from the Internet at http://www.gsa.gov/far/SECG.

FOR FURTHER INFORMATION CONTACT: Beverly Fayson, FAR Secretariat, (202) 501–4755.

SUPPLEMENTARY INFORMATION:

LIST OF RULES IN FAC 90–45

Item	Subject	FAR case	Analyst
I*	Procurement Integrity	96–314	Linfield.
II *	Certification Requirements	96–312	O'Neill.
III	Humanitarian Operations	96–323	Linfield.
IV	Freedom of Information Act	96–326	O'Neill.
V	Exceptions to Requirements for Certified Cost or Pricing Data	96–306	Olson.
VI *	Implementation of the North American Free Trade Agreement Implementation Act	93–310	Linfield
VII *	Application of Special Simplified Procedures to Certain Commercial Items	96–307	Moss.
VIII	Compliance with Immigration and Nationality Act Provisions	96–320	Linfield.
IX	Caribbean Basin and Designated Countries	96–017	Linfield.
X	Caribbean Basin Country End Products—Renewal of Treatment as Eligible	96–020	Linfield.
XI	Compensation of Certain Contractor Personnel (Interim)	96–325	DeStefano.
XII *	Agency Procurement Protests	95–309	O'Neill.
XIII *	Two-Phase Design Build Selection Procedures	96–305	O'Neill.
XIV	Year 2000 Compliance (Interim)	96–607	O'Neill.
XV	Limitation on Indirect Cost Audits	96–324	Olson.

Item I—Procurement Integrity (FAR Case 96–314)

This final rule amends the FAR to implement the procurement integrity provisions of Section 27 of the Office of Federal Procurement Policy (OFPP) Act, as amended by Section 4304 of the 1996 National Defense Authorization Act. Section 4304 is part of the Clinger-Cohen Act of 1996. Section 3.104 is rewritten. Unlike the previous statute, some of the post-employment restrictions in the rewritten 3.104 apply to post-award activities. The final rule eliminates all of the procurement integrity certifications required by the previous statute.

The final rule makes other significant changes. The new post-employment restrictions apply to services provided or decisions made on or after January 1, 1997; the old restrictions apply for former officials whose employment ended before January 1, 1997. The clause at 52.203–10 is revised. The clauses at 52.203–9 and 52.203–13, and the Optional Form 333 at 53.202–1, are removed. The solicitation provision at 52.203–8 is replaced with a new clause to provide the means to void or rescind contracts where there has been a violation of the procurement integrity restrictions.

Item II—Certification Requirements (FAR Case 96–312)

This final rule amends FAR Parts 1, 3, 4, 6, 8, 9, 12, 14, 16, 19, 23, 27, 29, 31, 32, 36, 37, 42, 45, 47, 49, 52, and 53 to remove certain certification requirements for contractors and offerors that are not specifically required by statute. The rule implements Section 4301(b) of the Clinger-Cohen Act of 1996 (Public Law 104–106).

Item III—Humanitarian Operations (FAR Case 96–323)

This final rule amends the definition of ''simplified acquisition threshold'' at FAR 2.101 to increase the threshold to $200,000 for contracts to be awarded and performed, or purchases to be made, outside the United States in support of a humanitarian or peacekeeping operation. The rule implements 10 U.S.C. 2302(7) and 41 U.S.C. 259(d) as amended by Section 807 of the National Defense Authorization Act for Fiscal Year 1997 (Public Law 104–201).

Item IV—Freedom of Information Act (FAR Case 96–326)

This final rule amends FAR Subpart 24.2 to implement Section 821 of the National Defense Authorization Act for Fiscal Year 1997 (Public Law 104–201). Section 821 prohibits, with certain exceptions, Government release of competitive proposals under the Freedom of Information Act.

Item V—Exceptions to Requirements for Certified Cost or Pricing Data (FAR Case 96–306)

This final rule implements Section 4201 of the Clinger-Cohen Act of 1996 (Public Law 104–106). Section 4201: (1) Exempts suppliers of commercial items under Federal contracts from the requirement to submit costs or pricing

data; (2) provides for the submission of information other than cost or pricing data to the extent necessary to determine price reasonableness; and (3) removes specific audit authorities pertaining to information provided by commercial suppliers. Accordingly, FAR 15.8, 52.215–26, 52.215–41, and 52.215–42 are amended to revise requirements pertaining to the submission of information relating to commercial items; FAR 52.215–43 is removed; and other associated changes are made in FAR Parts 4, 12, 15, 16, 25, 31, 46, and 52.

Item VI—Implementation of the North American Free Trade Agreement Implementation Act (FAR Case 93–310)

The interim rule published as FAC 90–19 and amended by FAC 90–39 is converted to a final rule with changes. The final rule amends FAR Part 25. The final rule revisions result from public comments received on FAR Case 96–312 published as Item II in this FAC. Upon consideration of those public comments, certifications eliminated under the interim rule published in FAC 90–39 were reinstated.

Item VII—Application of Special Simplified Procedures to Certain Commercial Items (FAR Case 96–307)

This final rule amends FAR Parts 5, 6, 11, 12, and 13 to implement section 4202 of the Clinger-Cohen Act of 1996 (Public Law 104–106). Section 4202 requires revisions to the FAR to incorporate special simplified procedures for the acquisition of certain commercial items with a value greater than the simplified acquisition threshold ($100,000) but not greater than $5 million. The purpose of this revision is to vest contracting officers with additional procedural discretion and flexibility, so that commercial item acquisitions in this dollar range may be solicited, offered, evaluated, and awarded in a simplified manner that maximizes efficiency and economy and minimizes burden and administrative costs for both the Government and industry.

Item VIII—Compliance With Immigration and Nationality Act Provisions (FAR Case 96–320)

The interim rule published as Item II of FAC 90–41 is converted to a final rule without change. The final rule amends FAR 9.406 to specify that a contractor may be debarred upon a determination by the Attorney General that the contractor is not in compliance with the employment provisions of the Immigration and Nationality Act. The rule implements Executive Order 12989, Economy and Efficiency in Government Procurement Through Compliance With Certain Immigration and Naturalization Act Provisions.

Item IX—Caribbean Basin and Designated Countries (FAR Case 96–017)

This final rule amends FAR 25.401 to update the lists of countries included in the definitions of ''Caribbean Basin country'' and ''Designated country''.

Item X—Caribbean Basin Country End Products—Renewal of Treatment as Eligible (FAR Case 96–020)

This final rule amends FAR 25.402(b) to implement the extension by the U.S. Trade Representative of the date of eligibility under the Trade Agreements Act for products of Caribbean Basin countries.

Item XI—Compensation of Certain Contractor Personnel (FAR Case 96–325)

This interim rule adds a new requirement at FAR 31.205–6(p) to implement Section 809 of the Fiscal Year (FY) 1997 National Defense Authorization Act (Public Law 104–201). Section 809 places a Governmentwide ceiling of $250,000 per year on allowable compensation costs for contractor personnel in senior management positions under contracts awarded during FY 1997.

Item XII—Agency Procurement Protests (FAR Case 95–309)

The interim rule published as Item XIII of FAC 90–40 is revised and finalized. The rule amends FAR 33.103 to implement Executive Order 12979, Agency Procurement Protests. Executive Order 12979 provides for inexpensive, informal, procedurally simple, and expeditious resolution of agency protests, including the use of alternative dispute resolution techniques, third party neutrals, and another agency's personnel.

Item XIII—Two-Phase Design-Build Selection Procedures (FAR Case 96–305)

This final rule amends FAR Part 36 to implement Section 4105 of the Clinger-Cohen Act of 1996 (Public Law 104–106), which authorizes the use of two-phase design-build procedures for construction contracting. Two phase design-build construction contracting provides for the selection of a limited number of offerors (normally five or fewer), during Phase One of the solicitation process, to submit detailed proposals for Phase Two.

Item XIV—Year 2000 Compliance (FAR Case 96–607)

This interim rule amends FAR Part 39 to increase awareness of Year 2000 procurement issues and to ensure that solicitations and contracts address Year 2000 issues.

Item XV—Limitation on Indirect Cost Audits (FAR Case 96–324)

This final rule amends FAR Part 42 to implement Section 808 of the FY 97 National Defense Authorization Act (Public Law 104–201). Section 808 amends 10 U.S.C. 2313(d) and 41 U.S.C. 254d(d) to expand required audit reciprocity among Federal agencies to include post-award audits. 10 U.S.C. 2313(d) and 41 U.S.C. 254d(d) were added by the Federal Acquisition Streamlining Act of 1994, Sections 2201(a)(1) and 2251(a) of Public Law 103–355, to include reciprocity on pre-award audits.

Dated: December 24, 1996.

Edward C. Loeb,

Director, Federal Acquisition Policy Division.

[FR Doc. 96–33220 Filed 12–31–96; 8:45 am]

BILLING CODE 6820–EP–P

federal register

Thursday
January 2, 1997

Part VI

Department of Transportation

Federal Railroad Administration

49 CFR Part 232

Two-Way End-of-Train Telemetry Devices; Final Rule

DEPARTMENT OF TRANSPORTATION

Federal Railroad Administration

49 CFR Part 232

[FRA Docket No. PB–9, Notice No. 6]

RIN 2130–AA73

Two-Way End-of-Train Telemetry Devices

AGENCY: Federal Railroad Administration (FRA), DOT.

ACTION: Final rule.

SUMMARY: FRA is revising the regulations governing train and locomotive power braking systems to include provisions pertaining to the use and design of two-way end-of-train telemetry devices (two-way EOTs). Two-way EOTs provide locomotive engineers with the capability of initiating an emergency brake application that commences at the rear of the train. These revisions are designed to improve the safety of railroad operations by requiring the use of these devices on a variety of freight trains in accordance with legislation enacted in 1992 and by providing minimum performance and operational standards related to the use and design of two-way EOTs.

EFFECTIVE DATE: The rule is effective July 1, 1997.

ADDRESSES: Any petition for reconsideration should be submitted to the Docket Clerk, Office of Chief Counsel, Federal Railroad Administration, 400 Seventh Street, S.W., Room 8201, Washington, D.C. 20590.

FOR FURTHER INFORMATION, CONTACT: Thomas Peacock, Motive Power and Equipment Division, Office of Safety, RRS–14, Room 8326, FRA, 400 Seventh Street, S.W., Washington, D.C. 20590 (telephone 202–632–3345), or Thomas Herrmann, Trial Attorney, Office of the Chief Counsel, FRA, 400 Seventh Street, S.W., Washington, D.C. 20590 (telephone 202–632–3167).

SUPPLEMENTARY INFORMATION:

Background

The train air brake system is complex and sensitive. A simplified summary of its operation may be useful in understanding the use and desirability of the technology required by this final rule. The train air brake system is composed of three major parts: (i) a signal sender; (ii) a signal relayer; and (iii) a signal receiver/responder.

The brake valve on the locomotive is the signal sender. Operation of the valve permits air to be pumped into or released from the brake pipe. The pressure change resulting from the additional or reduced air supply in the brake pipe is the ''signal.'' The brake pipe, also known as the train air line, is the ''signal relayer.'' The brake pipe is the continuous air line running from the front of the train to the rear of the train. The continuity of the air line from car to car is accomplished by means of flexible air hoses. The brake pipe is closed (sealed) at the rear of the train and pressurized so that, apart from air leakage in the system, changes in the brake pipe pressure are made through operation of the brake valve on the locomotive.

When the engineer ''sets the brakes,'' air is released from the brake pipe through the locomotive brake valve. This release of air reduces the pressure of the brake pipe, beginning at the front of the train. The pressure reduction moves down the brake pipe to the rear of the train. Thus, the signal is relayed by the brake pipe to the entire train. Similarly, when the brakes are released, the locomotive brake valve is positioned so that air is pumped into the brake pipe, sending a pressure increase through the brake pipe. A pressure reduction in the brake pipe rather than a pressure increase initiates a brake application. Consequently, the train air brake system is said to be ''failsafe,'' i.e., if an air hose bursts, the resulting loss of air pressure in the brake pipe will initiate a brake application.

The third major part of the train air brake system is the ''signal receiver/responder'' valves located on each car, which receive and interpret the changes in the brake pipe pressure. These valves initiate the application or release of the brake on each individual car. The degree of braking effort is determined by the degree of the brake pipe pressure drop, generally described as a partial service reduction, a full service reduction, or an emergency application.

An EOT device is a radio telemetry device composed of a front unit, located in the cab of the controlling locomotive, and a rear unit, located at the rear of the train and attached to the brake pipe. Provisions governing the use of one-way EOTs were incorporated into the power brake regulations in 1986. *See* 49 CFR 232.13 and 232.19. One-way EOTs have the capability of interpreting rear-of-train brake pipe pressure and of transmitting that information via radio to the front receiving unit in the cab of the controlling locomotive. Optional features include the transmission of information regarding rear end motion and battery status. Many of the rear units of an EOT also incorporate rear-end marking devices required by 49 CFR Part 221. One-way EOTs only have the ability to transmit information from the rear unit to the front unit.

Since the advent of EOTs, technological advances have been made to incorporate ''two-way communication'' into the system. The two-way EOTs, in addition to the features of the one-way EOTs, have the ability of transmitting from the controlling locomotive an emergency brake application that begins at the rear of the train. This is a desirable feature in event of a blockage or separation in the train's brake pipe that would prevent the pneumatic transmission of the emergency brake application throughout the entire train. In 1986, FRA concluded that mandating the installation of two-way EOTs was not warranted. At that time, cabooseless trains operating without two-way EOTs lacked any ability to initiate an emergency brake application from the rear of the train and in FRA's view there was no demonstrated a need for the EOT to do so. Furthermore, at that time EOTs with two-way capability were not commercially available. In addition, since two-way capability requires two-way signal transmission, the cost of the devices sharply increased. Nevertheless, FRA made a public commitment then to monitor developments in EOT technology and to review the subject periodically. *See* 51 FR 17300, 17301 (May 9, 1986).

Since 1986, significant advances have been made in the development of two-way EOTs, and they are now commercially available in the marketplace from several manufacturers. In 1987, two-way EOTs were mandated in Canada as a condition for elimination of cabooses. FRA received recommendations from the National Transportation Safety Board (NTSB) and petitions from the United Transportation Union, the Brotherhood of Locomotive Engineers, the Oregon Public Utilities Commission, the Washington Utilities and Transportation Commission, and the Montana Public Service Commission to require two-way EOTs on all cabooseless trains operating in certain territories.

In 1992, Congress amended the Federal rail safety laws by adding certain statutory mandates related to power brake safety. *See* 49 U.S.C. 20141 (formerly contained in Section 7 of the Rail Safety Enforcement and Review Act, Pub. L. No. 102–365 (September 3, 1992), amending Section 202 of the Federal Railroad Safety Act of 1970, formerly codified at 45 U.S.C. 421, 431 *et seq.*). These amendments specifically address two-way EOTs by adding a new subsection which states:

(r) POWER BRAKE SAFETY.—
* * * (3)(A) The Secretary shall require 2-way end of train devices (or devices able to perform the same function) on road trains other than locals, road switchers, or work trains to enable the initiation of emergency braking from the rear of the train. The Secretary shall promulgate rules as soon as possible, but not later than December 31, 1993, requiring such 2-way end of train devices. Such rules shall at a minimum—

(i) set standards for such devices based on performance;

(ii) prohibit any railroad, on or after the date that is one year after promulgation of such rules, from acquiring any end of train device for use on trains which is not a 2-way device meeting the standards set under clause (i);

(iii) require that such trains be equipped with 2-way end of train devices meeting such standards not later than 4 years after promulgation of such rules; and

(iv) provide that any 2-way end of train device acquired for use on trains before such promulgation shall be deemed to meet such standards. (B) The Secretary may consider petitions to amend the rules promulgated under subparagraph (A) to allow the use of alternative technologies which meet the same basic performance requirements established by such rules. (C) In developing the rules required by subparagraph (A), the Secretary shall consider data presented under paragraph (1).

(4) The Secretary may exclude from the rules required by paragraphs (1), (2), and (3) any category of trains or rail operations if the Secretary determines that such an exclusion is in the public interest and is consistent with railroad safety. The Secretary shall make public the reasons for granting any such exclusion. The Secretary shall at a minimum exclude from the requirements of paragraph (3)—

(A) trains that have manned cabooses;

(B) passenger trains with emergency brakes;

(C) trains that operate exclusively on track that is not part of the general railroad system;

(D) trains that do not exceed 30 miles per hour and do not operate on heavy grades, except for any categories of such trains specifically designated by the Secretary; and

(E) trains that operate in a push mode.

Pub. L. No. 102–365, § 7; codified at 49 U.S.C. 20141, superseding 45 U.S.C. 431(r).

Proceedings to Date

In response to the statutory mandate, the various recommendations, and due to its own determination that the power brake regulations were in need of revision, FRA published an Advance Notice of Proposed Rulemaking (ANPRM) on December 31, 1992 (57 FR 62546) and conducted a series of public workshops in early 1993. A section of the ANPRM was specifically designed to elicit comments, information, and views on two-way EOTs, and a portion of the public workshops covered this topic. *See* 57 FR 62550–62551. Based on the comments and information received, FRA published an NPRM regarding revision the power brake regulation which contained specific requirements related to two-way EOTs. *See* 57 FR 47700, 47713–14, 47731, 47734, and 47743.

Following publication of the NPRM in the Federal Register (59 FR 47676), FRA held a series of public hearings in 1994 to allow interested parties the opportunity to comment on specific issues addressed in the NPRM. Public hearings were held in Chicago, Illinois on November 1–2; in Newark, New Jersey on November 4; in Sacramento, California on November 9; and in Washington, D.C. on December 13–14, 1994. These hearings were attended by numerous railroads, organizations representing railroads, labor organizations, rail shippers, and State governmental agencies. Due to the strong objections raised by a large number of commenters, FRA announced by notice published on January 17, 1995 that it would defer action on the NPRM and permit the submission of additional comments prior to making a determination as to how it would proceed in this matter. 60 FR 3375. In the January notice, FRA also stressed that it did not intend to defer implementation of the requirement for two-way EOTs beyond an effective date of December 31, 1997.

In the ANPRM and the NPRM, FRA identified 11 recent incidents that might have been avoided had the involved trains been equipped with two-way EOTs. *See* 57 FR 62550; 59 FR 47713–14. In addition, on December 14, 1994, in Cajon Pass in California, an intermodal train operated by The Atchison, Topeka and Santa Fe Railway Company (Santa Fe) collided with the rear end of a unit coal train operated by the Union Pacific Railroad Company, resulting in the serious injury of two crew members and total estimated property damages in excess of $4 million. After investigation of this incident, the NTSB concluded that, had the train been equipped with a two-way EOT, the collision could have been avoided because the engineer could have initiated an emergency brake application from the end of the train. On December 15, 1995, based on the conclusion reached above, the NTSB made the following recommendation to FRA:

> Separate the two-way end-of-train requirements from the Power Brake Law NPRM, and immediately conclude the end-of-train device rulemaking so as to require the use of two-way end-of-train telemetry devices on all cabooseless trains. (R–95–44).

Furthermore, on February 1, 1996, again in Cajon Pass, a westward Santa Fe freight train derailed on a descending three-percent grade. The incident resulted in fatal injuries to two of the crew members, serious injuries to a third, and the derailment of 45 of 49 cars and four locomotives. Although investigation of this incident is currently in progress, it appears as though it could have been avoided had the train been equipped with a means for the train crew to have effected an emergency brake application from the rear of the train. The two aforementioned incidents resulted in FRA's issuance on February 6, 1996, of Emergency Order No. 18 (61 FR 5058), which requires the affected railroad to ensure that its train crews have the ability to effect an emergency brake application from the rear of the train on all westward freight trains operating through Cajon Pass.

Consequently, based on these considerations and after review of all the comments submitted, FRA determined that in order to limit the number of issues to be examined and developed in any one proceeding it would proceed with the revision of the power brake regulations via three separate processes. In light of the testimony and comments received on the NPRM, emphasizing the differences between passenger and freight operations and the brake equipment utilized by the two, FRA decided to separate passenger equipment power brake standards from freight equipment power brake standards. As passenger equipment power brake standards are a logical subset of passenger equipment safety standards, the passenger equipment safety standards working group will assist FRA in developing a second NPRM covering passenger equipment power brake standards. *See* 49 U.S.C. 20133(c). In addition, a second NPRM covering freight equipment power brake standards will be developed with the assistance of FRA's Railroad Safety Advisory Committee. *See* 61 FR 29164. Furthermore, in the interest of public safety and due to statutory as well as internal commitments, FRA determined that it would separate the issues related to two-way EOTs from both the passenger and freight issues, address them in a public regulatory conference, and issue a final rule on the subject as soon as practicable.

Pursuant to a notice published on February 21, 1996 (61 FR 6611), FRA held an informal public regulatory conference on March 5, 1996, in Washington, D.C. to further discuss issues related to the proposed

requirements on two-way EOTs contained in the NPRM. In accordance with the Administrative Procedure Act (5 U.S.C. 551 *et seq.*), the public regulatory conference was a continuation of the power brake rulemaking proceeding. In this notice, based on a review of the substantial number of comments submitted in connection with the ANPRM and the NPRM regarding two-way EOTs, FRA identified and provided some discussion of seven major issue areas regarding two-way EOTs including: the definition of ''mountain grade territory,'' en route failures of the devices, trains subject to the requirements, initial terminal requirements, design requirements, calibration requirements, and cost/benefit information. As part of the cost/benefit discussion, FRA identified 26 potentially preventable accidents had the trains involved been equipped with two-way EOTs. *See* 61 FR 6615. This public regulatory conference was attended by representatives of at least seven railroads, two organizations representing Class I and short line railroads, four labor organizations, two manufacturers of the two-way EOTs, and one State public utilities commission. Written comments were received from most of these parties or their representative. The comment period for this proceeding closed on April 15, 1996; however, comments received after that date have been considered.

Discussion of Comments and Conclusions

Those parties filing comments and presenting testimony regarding two-way EOTs at the hearings following publication of the ANPRM and NPRM as well as the public regulatory conference have provided the agency with a wealth of facts and informed opinions and have been extremely helpful to FRA in resolving the issues. While most commenters provided testimony or written comments on more than one issue, and while most of the comments supported the position(s) of at least one other commenter, the issues themselves were centered around a few key concepts. Rather than attempt to paraphrase each commenter's response to each of the proposed regulatory sections in the NPRM, FRA believes it is better, and more understandable, to discuss the key issue areas in this proceeding and present the thrust of the comments on each of these.

A. Replacement of Term ''Mountain Grade'' with ''Heavy Grade''; Definition of Heavy Grade

In the NPRM as well as in the Notice of Public Regulatory Conference, FRA consistently used the term ''mountain grade'' territory to describe those areas where trains, even though operating below 30 mph, would be required to be equipped with a two-way EOT. Several commenters recommended that FRA abandon its use of the term ''mountain grade'' territory because it is confusing and inconsistent with the language used in the statute. *See* 49 U.S.C. 20141(c). In order to remain consistent with the language used in the statutory mandate and to avoid confusion by affected parties, FRA will not use the term ''mountain grade'' territory in the final regulations and will instead use the term ''heavy grade.''

In Appendix C of the NPRM, FRA proposed a definition of mountain grade territory as a section of track of distance, D, with an average grade of 1.5 percent or more over that distance which satisfies the following relationship:

$$(30/V)^2G^2D \leq 12$$

Where:

G = average grade x 100

D = distance in miles over which average grade is taken

V = speed of train

See 59 FR 47719, 47753. FRA also provided a chart containing mountain grade territory curves based on an application of the definition. *See* 59 FR 47753. FRA developed this empirical relationship based on most commenters' suggestions that some type of formula be developed based on a variety of factors, including train tonnage, speed, length of grade, percent of grade, and distance of grade. FRA determined that the three most important variables in defining mountain grade were: (i) the speed of the train (V); (ii) the steepness of the grade (G); and (iii) the length of the grade (D).

Many commenters found the definition contained in the NPRM confusing, inaccurate, and impractical. These commenters suggested that the definition would result in known mountain or heavy grades not being covered by the two-way EOT requirement, while other areas never before believed to be mountain grades would fall within the requirement. Several commenters also recommended that the definition be eliminated and that the two-way EOT requirements apply solely to trains operating in excess of 30 mph. The California Public Utilities Commission suggested that, short of requiring the devices on every train, the fundamental criterion should be the ability of the train to stop within a safe distance based solely on the ability of the independent locomotive brakes. Other commenters suggested that other criteria be used to define mountain grade territory and that the formula be simplified. One commenter recommended that the proposed definition be eliminated, and that the two-way EOT requirements be applied to trains operating over 30 mph and to heavy tonnage and long trains as defined in FRA's proposal.

Based on these comments as well as its reconsideration of the proposed definition, FRA acknowledged that the definition contained in the NPRM was confusing and inaccurate in its Notice of Public Regulatory Conference published on February 21, 1996. *See* 61 FR 6612. In that Notice, FRA requested alternative suggestions and proposed replacing the term ''mountain grade'' with ''heavy grade'' and defining ''heavy grade'' as: any portion of a railroad with an average grade of one percent or greater where the product of the average percent grade (as a decimal) and the distance over which the grade persists (in miles) is greater than or equal to .03. Thus a one percent (.01) average grade for three miles or a two percent (.02) average grade for 1.5 miles would meet the definition. *See* 61 FR 6613. Although this definition was accepted by some commenters as being better than that proposed in the NPRM, none of the commenters endorsed the definition, and several stated that it was either too hard to enforce or was too broad or too narrow.

Several commenters provided alternative definitions of mountain or heavy grade. The Association of American Railroads (AAR) and The American Short Line Railroad Association (ASLRA) suggested that mountain or heavy grade be defined as ''a section of track with a continuous grade of 2 percent or greater over a distance of 2 miles.'' Many commenters objected to this alternative, stating that it excludes known mountain or heavy grade territories. Several of these commenters identified specific locations with grades of greater than one percent but less than two percent for long distances that would not fall within the definition proposed by the AAR (such as Feather River Canyon in California and the grade at Pig's Eye Yard in St. Paul, Minnesota). In the alternative, the AAR recommended that the term mountain or heavy grade not be specifically defined in the regulation and that each railroad define the term in its operating rules filed with FRA. The stated advantage to this approach is that each railroad could tailor the definition

to its particular operating territory and FRA could object should a railroad fail to include a section of track FRA believed to be mountain or heavy grade territory. Several commenters objected to this alternative, stating that such a regulation would be difficult to enforce since every railroad would have different definitions of the term and such a regulation could result in railroads intentionally defining the term in order to negate its applicability to their operation. The ASLRA further recommended that shorter, lower tonnage trains be excluded from any definition of mountain or heavy grade due to the costs involved with equipping these types of operations and the fact that the safety data does not support the need for the use of the devices on these types of operations solely because they operate in mountain or heavy grade territory. The ASLRA also suggested that an alternative to the use of two-way EOTs be permitted for trains operating with 4,000 trailing tons or less by permitting them to use retaining valves, set in the high pressure position before operating over a descending grade.

The Brotherhood of Railway Carmen (BRC) recommended that ''heavy grade'' be defined as any grade greater than one percent. The BRC believed that such a definition was clear, enforceable, and not overly restrictive. This commenter felt that variables such as speed, tonnage, and train length were too subject to manipulation and change to be included in a clear, enforceable definition. Other commenters objected to this definition, stating that it was overly broad and would include areas never considered to be heavy grades. Several commenters recommended that two-way EOTs be required on all trains operating on main line track regardless of speed or grade. Many parties objected to this suggestion stating that it is clearly in excess of Congress' intent to provide exceptions for various operations based on their operating speeds, terrain, and type of service being provided.

The California Public Utilities Commission (CAPUC) recommended that a performance standard be adopted to determine which operations would be subject to the requirements. This performance standard would be based on the ability of the independent locomotive brakes to stop a train. In its written comments, the CAPUC provided a detailed discussion of calculating the standard for various grades and tonnages based on the amount of independent locomotive brake present on a given train. However, the CAPUC emphasized that values contained in its analysis were illustrative and that further research would be required to develop the concept. At the public regulatory conference, several parties objected to this type of performance approach as too complicated and very difficult, if not impossible, to enforce due to the amount of information necessary to calculate the formula.

Conclusions

In its statutory mandate, Congress specifically provided an exception from any two-way EOT requirements for certain trains that do not operate on heavy grades. *See* 49 U.S.C. 20141(c)(4). In order to give effect to, and remain consistent with, this statutory provision, FRA is compelled to develop an understandable and easily enforceable standard for determining whether a segment of track should be considered heavy grade territory. FRA believes that any regulations related to two-way EOTs must include provisions excluding from the requirements certain operations that do not operate on heavy grades. Consequently, FRA does not think it would be consistent with the statutory mandate or with the safety data reviewed in this proceeding to require the use of two-way EOTs on all trains operating on main line track regardless of speed or grade, as recommended by some commenters. FRA believes that a performance standard based on tons per axle of independent locomotive brake offers an attractive approach; however, the proposal would require significant refinement and might not be capable of reliable application in the field. FRA also believes that the AAR alternative, permitting each railroad to define the term heavy grade, could result in inconsistent standards, without an adequate safety rationale, opening the regulation to legal challenge, and would require considerable agency resources to review and verify the submissions of each railroad across the country.

In determining the most effective way to define heavy grade, FRA not only considered the comments submitted but also considered and analyzed a variety of factors which affect the operation of a train in grade territory. These included such things as: the steepness of grade; the effect of cresting speed; the location of a trainline blockage; the weight of the train; the number of locomotives; the length of grade; and the life of brake shoes under stress. After consideration of these factors, FRA determined that any definition of heavy grade should attempt to incorporate the effects of as many of these factors as possible without creating a requirement which would be extremely complex or overly intrusive on the operations of a railroad. For example, one factor FRA considered to be overly intrusive was placing limitations on the cresting speeds of trains at various grades. FRA determined that there was no universally applicable standard and that establishing such limitations may actually create additional safety concerns.

In the aftermath of recent accidents on heavy grades, FRA became aware of the great value of including heavy grade descent plans in the training and instruction of operating employees. A heavy grade descent plan can incorporate the wisdom and experience of engineers long familiar with descending a particular heavy grade and provide a vehicle for sharing the different ways the grade can successfully be traversed. Such a plan should take into account a wide variety of factors such as those listed above. FRA strongly encourages railroads to develop and use heavy grade descent plans and to share ''best practices'' for training operating employees to handle heavy grades. While requiring the use of heavy grade descent plans or changing requirements for training operating employees is outside the scope of this rulemaking, FRA thinks that railroads should be aware in the context of this rule of the potential for heavy grade descent plans to enhance safety. FRA will address heavy grade descent plans and training practices through other vehicles in the near future.

As noted above, the AAR and the ASLRA proposed to define heavy grade as a section of track with a continuous grade of two percent for two miles. FRA believes this basic and simple definition is a good starting point as it takes into account both the percentage of grade and the distance over which that grade extends. However, FRA agrees with many of the commenters that this definition fails to capture several areas traditionally considered to be heavy or mountain grades. Furthermore, after a review of the potentially preventable accidents identified in the Notice of Public Regulatory Conference (61 FR 6615) as well as other recently identified accidents/incidents, it is apparent that train tonnage or length should also be a factor in determining whether a particular segment of track is considered heavy grade territory for a particular train. In order to keep the definition of heavy grade as simple to understand as possible, FRA will use only total trailing tons as a supplemental factor since it somewhat incorporates train length. Consequently, FRA will use a simple, two-level approach in defining heavy grade, using the total trailing tons of a train as one

of the two bases for determining whether the train is operating over a heavy grade.

The ASLRA recommended that FRA exclude trains with less than 4,000 trailing tons from the requirements relating to heavy grades, contending that the safety data do not support the use of the devices on these shorter, lower-tonnage trains and that such an exclusion would reduce the economic impact of the requirements on smaller railroads. After a review of the accident/incident data, FRA agrees that lower-tonnage trains tend to have fewer problems operating over heavy grades than higher-tonnage trains. Virtually all of the accidents/incidents cited by FRA in its cost/benefit analysis as potentially preventable with a high degree of confidence involve long, heavy-tonnage trains or trains operating in excess of 30 mph. Consequently for simplicity's sake, FRA will adopt the definition of heavy grade suggested by the AAR and the ASLRA for trains operating with 4,000 trailing tons or less, with one modification: FRA will require use of a two-way EOT on trains operating with 4,000 trailing tons or less when operated on a segment of track with an average rather than a continuous grade of two percent or more for a distance of two or more miles. FRA believes that the use of average grade instead of continuous grade will capture some of the locations with brief dips below two percent (i.e., 1.9 or 1.8 percent) raised as examples by several commenters. Furthermore, FRA does not believe that the use of retaining valves, even on a train operating with less than 4,000 trailing tons, provides the same measure of safety as an armed and operable two-way EOT and, thus, FRA will not permit the use of retaining valves as an alternative to the use of a two-way EOT.

As mentioned above, FRA will apply a separate definition of heavy grade for trains operating with greater than 4,000 trailing tons. A review of the accidents/incidents considered by FRA as potentially preventable, had the train involved been equipped with a two-way EOT, reveals that those incidents occurring on steep grades almost always involved trains operating with greater than 4,000 trailing tons. FRA believes that the definition of heavy grade for these types of trains needs to be broad enough to encompass the areas identified by several commenters noted above, yet sufficiently limited so as not to be overly burdensome to the industry. Consequently, based on FRA's proposed definition contained in its Notice of Public Regulatory Conference (61 FR 6613) and based upon comments received from the BRC and CAPUC as well as others, FRA will define heavy grade for trains operating with greater than 4,000 trailing tons as segments of track with an average grade of one percent or greater over a distance of three or more miles. FRA does not believe this definition will be overly burdensome to the industry since the ASLRA stated that 17 of the 21 mountain grade railroads it surveyed have average train tonnage of less than 4,000 trailing tons and most of the trains operated by Class I railroads over this type of terrain will be operating in excess of 30 mph at some point between origin and destination of the intact consist.

Both of the definitions of heavy grade discussed above include a minimum distance over which the average grade must extend. If a strict percentage approach were adopted (i.e. 1 or 2 percent), then areas where brief dips in the grade reach those percentages for very short distances would bring a train within the requirement for use of the device when in reality these brief dips do not create a safety concern. The two and three mile minimum distance requirements were adopted based on an analysis of the relevant potentially preventable accident/incident data as well as the natural rolling resistance of a train and the brake shoe life of the independent locomotive brakes if cautious cresting speeds are assumed. The grade and mileage components of the definitions are sufficiently restrictive to capture all of the past relevant potentially preventable accidents/incidents but broad enough to prevent brief dips in the terrain from being considered heavy grades.

B. Applicability

Based on the statutory mandate and after review of the comments received and the accidents relied on for support of the use of two-way EOTs, FRA in the NPRM proposed that the devices be required equipment on trains that operate at speeds in excess of 30 mph and on trains that operate in mountain grade territories. *See* 59 FR 47743. In addition to those operations specifically excluded from two-way EOT requirements by the statute (49 U.S.C. 20141(c)), FRA found sufficient safety justification for excluding two other types of operations: (i) Freight trains equipped with a locomotive capable of initiating a brake application located in the rear third of the train length; and (ii) trains equipped with fully independent secondary braking systems capable of safely stopping the train in the event of failure of the primary system. In order to provide the industry with time to acquire a sufficient number of two-way EOTs and to ease the economic impact of acquiring the devices, FRA proposed that the requirement for use of the devices, not become effective until December 31, 1996. *See* 59 FR 47713, 47743. FRA also proposed that all two-way EOTs purchased prior to the effective date of the final rule would be deemed to meet the design requirements contained in the proposal. *See* 59 FR 47713, 47743. There were very few comments submitted in response to the NPRM specifically addressing the applicability requirements contained in the NPRM other than stylistic suggestions. One commenter did recommend that the exception for trains operating in a push mode be amplified to require that the control cab on the rear of train be occupied, display a reading of the brake pressure, and be capable of making an emergency application.

At the public regulatory conference several commenters raised objections to FRA's proposal regarding local and work trains that were reiterated in the written comments. In the NPRM, FRA proposed to require the use of two-way EOTs on local and work trains that exceeded 30 mph. *See* 59 FR 47743. FRA also proposed definitions of these types of trains. *See* 59 FR 47726. Several commenters objected to the proposed restrictions on these types of trains contending that they are inconsistent with the statutory mandate. The AAR proposed that these types of trains not be subject to the two-way EOT requirements and reiterated the definitions contained in the NPRM for local and work trains. In the statutory provision, Congress stated that two-way EOTs shall be required ''on road trains other than locals, road switchers, or work trains. . . .'' *See* 49 U.S.C. 20141(b)(1). However, the statute does not define the terms local, road switcher, or work trains and does not include them in the specific exclusions contained in the legislation. *See* 49 U.S.C. 20141(c). At the public regulatory conference it was generally agreed that any definition of local trains would essentially subsume the term ''road switcher'' and, thus, separate definitions would not be required for purpose of these regulations. Several commenters suggested that due to the nature of the work performed by local and work trains (e.g., delivery or pick-up switching en route and repairs) that any requirement that they be equipped with two-way EOTs would have a tremendous economic impact on the industry. These commenters also suggested that due to the shorter distances these trains generally travel

the safety rationale for requiring use of the devices is far less apparent. Other commenters recommended that FRA narrowly define local and work train in order to prevent a possible loophole wherein carriers could designate all their trains as local trains and, thus, circumvent the two-way EOT requirements. Several commenters also objected to treating local and work trains any differently than road trains as they incur the same operational difficulties and pose the same threat to safety.

One commenter expressed concern over the proposed exception granted to trains with a locomotive capable of making a brake application located in the rear third of the train. Generally, this commenter was concerned with how the locomotive, located in the rear third of the train, would be operated and whether the locomotive would be required to have the capability of effectuating an emergency brake application in both directions from its position in the train. Another commenter suggested that the proposed exception for trains operating in the push mode be reworded so as only to permit the exception if the train has the ability to initiate an emergency brake application from the rear of the train. One railroad recommended that an exception from the requirements regarding two-way EOTs be granted to railroads that do not operate on ruling grades exceeding .5 percent.

Conclusions

Although it is arguable, as some commenters suggested, that Congress intended for locals, road switchers, and work trains *per se* to be granted an exception from the requirements related to two-way EOTs, FRA does not believe Congress intended to except trains merely based on a label placed on the operation. FRA believes that Congress intended for the term ''locals, road switchers, or work trains'' to be narrowly construed by FRA and not so broadly defined that the requirements for two-way EOTs are rendered meaningless in many circumstances.

In the NPRM, FRA attempted to limit the local or work train exception by proposing the 30 mph standard. However, after reconsideration of the accident/incident data compiled in relation to this proceeding and the comments submitted, FRA admits that the proposed exception was probably not the most effective means of limiting the application of the requirements for these types of operations.

Therefore, in the final rule, rather than impose a blanket speed criterion, FRA intends to define local and work trains narrowly and not except such trains when operated in heavy-grade territory. FRA will start with the definitions proposed in the NPRM for local and work trains (59 FR 47726) and add an additional limiting factor of 4,000 trailing tons. FRA will further narrow the definition of a local train by adding the limitation that the train travel a distance that is no greater than that which can be operated by a single crew in a single tour of duty. In FRA's view, local trains operating with greater than 4,000 trailing tons for extended distances and work trains operating with greater than 4,000 trailing tons lose the characteristics of being traditional local or work trains and begin to look more like any other road train susceptible to the same operational problems and difficulties and, thus, fall outside the exception contemplated by Congress for local and work trains. FRA believes this approach is consistent with Congress' intent and FRA's rationale expressed with regard to defining heavy grades. This approach not only recognizes the operational necessity for the services these types of trains provide and the nature of the duties they engage in when en route, while preventing the potential for confusion or abuse of the term local or work train, but also ensures that those trains most likely to benefit from the added safety provided by two-way EOTs are so equipped.

FRA also intends to amend the exceptions contained in the NPRM relating to trains operated in a push mode and trains with a locomotive in the rear third of the train in order to clarify the exceptions and address the concerns raised by some commenters with regard to these exceptions. The exception for trains operated in the push mode will be clarified to include language that the train must have the ability to effectuate an emergency brake application from the rear of the train. In addition, the exception for trains operated with a locomotive in the rear third of the train will be amended to require that the locomotive be capable of effectuating an emergency brake application in both directions from its location in the train. FRA believes that although this method of operation does not provide all the safeguards provided by a two-way EOT, it provides other operational and train-handling benefits as well as many of the safeguards provided by a two-way EOT and, thus, there is no compelling need for the devices in these operations.

Finally, FRA rejects the suggestion of one railroad that an exception be granted for trains that do not operate on grades exceeding .5 percent regardless of the train's speed. Although these types of trains would not be operating on heavy grades, such an exception would be contrary to Congressional intent.

C. En Route Failures

In the NPRM, FRA proposed that if a two-way EOT or equivalent device becomes incapable of initiating an emergency brake application from the rear of the train while the train is en route, then the speed of that train would be limited to 30 mph. *See* 59 FR 47714, 47743. FRA's rationale for this limitation was that, under the statute, two-way EOT devices are not required on trains that travel less than 30 mph. Operating with a non-functional two-way EOT device is the same as not having a device; consequently, trains operating with failed two-way EOT devices should be subjected to this same limitation. Furthermore, FRA suggested that the concerns raised by several railroads regarding train delays, missed deliveries, and safety were not justified. The AAR as well as several railroads commented that these devices are very reliable and have an extremely low failure rate, if properly maintained. FRA believed that the concerns of the railroads were outweighed by the potential harm to both the public and railroad employees caused by trains being allowed to operate without the devices at speeds which Congress and FRA think require the added safety benefits provided by these devices.

Several railroads commented on FRA's proposal, reinforcing the view that such a limitation could cause serious train delays and missed deliveries and would actually produce additional safety hazards due to the bunching of trains. Commenters also suggested that FRA failed to include the cost of this limitation in its analysis. Other commenters noted that subsequent to the drafting of the NPRM, Canada eliminated its speed restriction for failure of a two-way EOT en route.

At the public regulatory conference and in written comments, the AAR again objected to any speed restriction for en route failures of the devices, stating that any speed restriction would be costly both in terms of operating expense and reduced customer satisfaction. In support of this statement, the AAR provided a cost analysis regarding various speed restrictions. The AAR also proposed an alternative method for handling en route failures. This proposal required that the conductor report the location, date, time, and description of the failure; that the train be equipped with a train brake status system; and that the train be moved only to the nearest forward point

capable of repairing or replacing the unit. Several commenters objected to this alternative as well as other alternatives permitting speeds greater than 30 mph on the grounds that they basically provide incentives to operate a train with a defective two-way EOT device. Many commenters felt that if carriers are permitted to proceed to the next point where repairs can be made then the same problems inherent with moving cars with any defect will result: repair points will disappear, or locations will be declared unable to make repairs or replacements.

Several commenters supported the proposed 30-mph speed restriction for en route failures. The BRC endorsed the proposed speed restriction, but would like to see it coupled with a requirement that the device be repaired or replaced at the next yard, terminal, or crew change point, whichever comes first. This commenter believed that the speed reduction was the only viable incentive for ensuring that railroads properly maintain the devices. At the public regulatory conference it was also discovered that, contrary to the information provided in response to the NPRM, Canada has not eliminated the 25-mph speed restriction for en route failures of two-way EOTs. The Canadian Legislative Director for the United Transportation Union stated that although the order requiring a speed reduction to 25 mph for en route failures of the devices was revoked, it was revoked only on the premise that the general operating instructions of the railroads would contain the requirements of the order, which they do, and it is a violation of the Canadian Rail Safety Act to violate the railroad's general operating instructions. Thus, the speed restriction for en route failure of the devices still exists in Canada, and no evidence was submitted to show the restriction has adversely affected railroad operations. FRA has received no written comments disputing the statements regarding the Canadian requirements as presented at the public regulatory conference.

Although supporting the 30-mph speed restriction for en route failures, the CAPUC was concerned that the limitation did nothing to address en route failures that occur in heavy grade territory. This commenter suggested that many trains do not operate over 30 mph when in mountain or heavy grade territory and, thus, for railroads operating such trains the risk of a 30-mph restriction provides no incentive to keep the devices operational. One commenter suggested an alternative to the speed restriction: requiring trains that develop en route failures to immediately stop and have the crew determine whether the train can be operated at a safe speed to the next location for repairs. This proposal also provided that if the train proceeded the crew would be exonerated from any discipline resulting from a rules violation or accident.

Both oral and written comments were received in relation to the question of what constitutes an en route failure of the device. In the NPRM, FRA merely stated that a failure will be considered the inability to initiate an emergency brake application from the rear of the train. Although this provides some guidance, it does not really address the problem of loss of communication and at what point that loss constitutes a failure of the device. Commenters and FRA recognize that brief communication interruptions between the front and rear units commonly occur and that these lapses may not be critical since the signal for an emergency application is transmitted at a much higher wattage than the ordinary communication signals between the two units. The AAR recommended that a failure not be declared until communication between the front and rear units cannot be established for 16 minutes and 30 seconds. This time frame was proposed based on the design of the devices, which automatically checks communication between the units every ten minutes. If no response is received, the front unit automatically requests communication from the rear 15 seconds later; if no response is received to that request, another request is made six minutes later; and if there is still no response, the front unit makes another request 15 seconds later. No other commenters presented measurable criteria for determining when an en route failure occurs.

Conclusions

FRA intends to require trains which experience en route failures of the two-way EOT device to limit their speed to 30 mph. FRA believes this is a logical outgrowth of the requirement that trains operating in excess of 30 mph be equipped with the devices. FRA agrees with many of the commenters that to permit speeds in excess of 30 mph would be akin to providing an incentive to operate without the devices. The railroads as well as the manufacturers of the devices stated that the failure rate for the devices is extremely low. These parties indicated that the majority of the failures were due to depleted batteries, which FRA believes will be reduced to a great extent by the requirements contained in this regulation regarding the charging of batteries throughout the trip. (*See* discussion regarding inspection and calibration of the devices.) FRA also believes that the 30-mph speed limitation on trains experiencing en route failures will encourage railroads to ensure that the devices are properly functioning when they are installed and will ensure that a sufficient number of the devices are available at various locations throughout a train's trip, both of which will further mitigate the effects of the speed restriction. Furthermore, trains in Canada have been operating for several years with a 25-mph speed restriction on trains that experience en route failures of the devices, and there were no comments submitted indicating the problems suggested by the railroads. Consequently, FRA believes that failure of these devices will be extremely rare and that the concerns expressed and the costs estimated by the railroads regarding train delays and missed deliveries are not justified and are overstated.

FRA does not intend to mandate locations where these devices must be repaired or replaced if they should fail en route. FRA believes each railroad is in the best position to determine the locations where additional devices can or must be maintained and stored to ensure the efficiency of its own operation. Furthermore, FRA believes that the requirements limiting the speed of a train operating with a defective device, as well as the inspection and battery charge requirements, are sufficient to promote the prompt repair or replacement of defective units and to ensure that the devices will be operational throughout a train's trip.

FRA will adopt the AAR's suggestion for determining when a loss of communication between the front and rear units should be considered a failure of the device en route. As noted in the above discussion, brief losses of communication do occur between the front and rear unit, and FRA does not intend to consider these communication gaps as failures en route. As pointed out by several commenters, the signal calling for the initiation of an emergency brake application is continuously transmitted at a wattage that is greater than five times the wattage at which ordinary communications between the two units are transmitted. Thus, brief communication gaps will be overcome by the increased wattage at which the signal calling for an emergency brake application is transmitted. The 16 minutes and 30 seconds recommended by the AAR is based on the current design of the automatic communication between the front and rear units and

constitutes an enforceable standard for determining when a loss of communication should be considered an en route failure.

As noted by some commenters, the issue of failures approaching the crest of heavy grades is not adequately addressed by simply limiting train speed. Nor is it sufficient to know that the train line is open and properly charged at the crest. As two recent accidents appear to illustrate, buff (compressive) forces in the train may cause blockages in the train line as the train descends the grade that may not have been present while the train was stretched on its upward climb. Therefore, it is particularly critical, in order to realize the benefits contemplated by the Congress, that the two-way EOT be operative as the train begins its descent down heavy grades. Although FRA believes that the requirements limiting the speed of a train operating with a defective device, as well as the inspection and battery charge requirements, are sufficient to promote the prompt repair or replacement of defective units and to ensure that the devices will be operational throughout a train's trip in most instances, FRA believes that additional safeguards must be provided when a train experiences a failure of its two-way EOT when operating on particularly heavy grades. FRA believes these added safeguards are necessary for those trains that operate over sections of track with an average grade of two percent or greater for two continuous miles. FRA's Emergency Order No. 18 permits operation over a heavy grade down the Cajon Pass of California only if the two-way EOT system is operative or provided one of certain other alternative measures is provided. The alternative measures include the following:

1. *Use of an occupied helper locomotive at the end of the train*. If this method is used, the helper locomotive engineer shall initiate and maintain two-way voice radio communication with the engineer on the head end of the train; this contact shall be verified just prior to passing the crest of the grade. If there is a loss of communication prior to passing the crest of the grade, the helper locomotive engineer and the head-end engineer shall act immediately to stop the train until voice communication is resumed. If there is a loss of communication once the descent has begun beyond Summit, the helper locomotive engineer and the head-end engineer shall act to stop the train if the train has reached a predetermined rate of speed that indicates the need for emergency braking. The brake pipe of the helper locomotive must be connected and cut in to the train line and tested to ensure operation; and trains shall be stopped when helpers are cut in or cut off from trains being assisted.

2. *Use of an occupied caboose at the end of the train* with a tested, functioning brake valve capable of initiating an emergency brake application from the caboose. If this method is used the train service employee in the caboose and the engineer on the head end of the train shall establish and maintain two-way voice radio communication and respond appropriately to the loss of such communication in the same manner as prescribed for helper locomotives.

3. *Use of a radio-controlled locomotive* in the rear third of the train under continuous control of the engineer in the head end by means of telemetry, but only if such radio-controlled locomotive is capable of initiating an emergency application on command from the lead locomotive.

Railroads typically maintain available helper locomotives and have crews on call to address exigencies in heavy grade territory, such as failure of one or more locomotives en route. FRA believes that, given the high reliability of two-way EOTs, the marginal costs of using helper locomotives cut into the train line—under the control of a crew in contact with the lead unit of the primary locomotive consist—would not be significant in relation to the risk of a run-away train. Accordingly, FRA will require that the two-way EOT be operative or that one of the approved alternative methods of operation be employed whenever a train required to be equipped with a two-way EOT operates over a section of track with an average grade of two percent or greater for a distance of two miles.

D. Design Requirements

In order to maintain uniformity in the performance of two-way EOTs, FRA proposed basic performance and design requirements for these devices in the NPRM. As two-way EOTs that are currently in production meet the design requirements already established for one-way devices contained at 49 CFR 232.19, FRA proposed to retain those requirements, apply them to two-way EOTs and add specific requirements to ensure two-way communication and the ability to initiate an emergency brake application from the rear of the train. In the NPRM, FRA recognized that currently available two-way EOTs have several optional features that could prove beneficial to railroads, and although FRA recommended that railroads obtain as many of the optional features as they can when purchasing the devices, FRA did not propose to mandate their use and feels each railroad is in the best position to determine which features benefit its operation.

In the NPRM, FRA proposed a requirement that the rear unit automatically begin restoring the brake function (recharging the air brake system) within 60 seconds after it has initiated an emergency application. *See* 59 FR 47731. FRA proposed this requirement based on the belief that currently manufactured two-way EOTs are designed with this feature. Several commenters in response to the NPRM and the Notice of Public Regulatory Conference suggested that the proposed provision requiring the automatic restoration of the brake function after 60 seconds should be eliminated. These commenters stated that the brake function should not be restored until the train has come to a complete stop or that the locomotive engineer should retain control of the restoration, or both. These commenters also stated that many railroads require the train to be inspected after an emergency application and do not want the brakes to be reset prior to the completion of the inspection.

In the Notice of Public Regulatory Conference, FRA attempted to clarify the proposal regarding the availability of the front-to-rear communications link being checked automatically by stating that the NPRM inadvertently contained a requirement of 10 minutes and that it should have read ''10-seconds.'' *See* 61 FR 6614. Several parties commented on this clarification, including the manufacturers of the devices, stating that a 10-second requirement would be impossible to meet with current technology and would result in a battery drain within a short time. These commenters stated that FRA correctly proposed a 10-minute requirement in the NPRM as that is the current industry standard and has been the standard for devices used in Canada for several years.

The AAR recommended that FRA should not require that the rear unit respond only to the front unit of that train. This commenter indicated that some railroads want the ability to activate the rear unit from a location other than the front end of the train in an emergency, such as, where the crew of the train becomes disabled. Finally, one commenter recommended that a separate, labeled, and protected emergency switch should not be mandated if the EOT's emergency

application could be integrated into the existing emergency brake controls.

Conclusions

Based on the comments received, FRA does not intend to change its position regarding the mandating of any of the optional features currently available on two-way EOTs. As FRA stated in the NPRM, it encourages railroads to obtain as many of the optional features as possible when purchasing the devices, but believes that each railroad is in the best position to determine which features best suit its operation. FRA agrees with many of the commenters that requiring the braking function to be automatically restored within 60 seconds after an emergency application has been initiated would hinder the safe practices of many railroads with regard to inspecting the train after an emergency application is made or leaving the train within the control of the locomotive engineer. FRA also agrees with those commenters that noted that FRA improperly suggested a change in the Notice of Public Regulatory Conference with regard to the time frame for checking the front-to-rear communications link. Consequently, FRA will leave the requirement at 10 minutes as proposed in the NPRM, rather than the 10 seconds contained in the Notice of Public Regulatory Conference.

FRA further agrees with the AAR's recommendation that some leeway be provided in the requirement that the rear unit respond to only the front unit of that train in order to permit railroads to activate the rear unit from a location other than the front end, provided it can be done in such a way as to ensure the security of such a procedure. FRA believes this can be easily accommodated by changes in the wording contained in the proposal to permit the rear unit to respond to an emergency command from any ''properly associated front unit.'' This language should permit the flexibility desired by some railroads.

FRA does not believe it would be beneficial to remove the provision requiring a separately labeled and manually controlled switch for initiating an emergency brake transmission command, as suggested by one commenter. At present, FRA is unfamiliar with the technology that would integrate the EOT's emergency application with the existing emergency brake controls. Implementation of integrated electronic controls of pneumatic brakes has not yet achieved the degree of reliability that would be desirable as a platform for this key safety function. Thus, FRA believes that such technology would best be introduced through a waiver or possibly through future regulations addressing the introduction of new technology, currently under consideration by the Railroad Safety Advisory Committee working group on freight power brakes.

E. Inspection and Calibration

At the ANPRM stage, FRA received several comments regarding the batteries used in two-way EOTs. Several commenters suggested that the most frequent cause of failure of two-way EOTs is battery failure. These commenters also indicated that this problem could be cured by replacing batteries at initial terminals. Other commenters suggested that some minimum charge be required at initial terminals and that inspections be performed during all brake tests and at crew change points. Several commenters also suggested that interchangeable battery packs were necessary because some railroads were unable to charge the devices that come onto their lines from other railroads. Based on these comments, FRA proposed that any train equipped with a two-way EOT or its equivalent shall not depart from the point where the train is originally assembled unless (i) the device is capable of initiating a brake application from the rear of the train and (ii) the batteries of the device are charged to at least 75 percent of watt-hour capacity. *See* 59 FR 47734.

At the public regulatory conference the issue of the amount of battery charge that should be required at initial terminals was discussed. Several commenters initially recommended that a percentage of watt-hour capacity be required at this location, ranging from 100 percent to 50 percent. However, as the discussion progressed, it was apparent that many commenters favored some type of performance requirement. In its written comments, the AAR recommended that FRA merely require that the EOT be sufficiently charged so that it can be reasonably expected that the EOT will remain operative until the next terminal capable of charging the batteries or installing replacements. The AAR suggested that such an approach would ensure that the devices are sufficiently charged without the use of an arbitrary percentage that may be too high, requiring railroads to spend resources to unnecessarily charge batteries, or that may be too low to ensure a sufficient charge throughout the trip. Other commenters recommended that if a performance standard is adopted which requires sufficient battery charge to ensure completion of the train's trip then strict liability needs to attach to instances where depleted batteries are the cause of an en route failure. It was stressed that this sort of liability should apply only to the batteries supporting the telemetry capabilities of the devices, not to the rear-end marker function. As noted previously, most EOTs incorporate the rear-end marking device required by 49 CFR Part 221 into their design, and there are separate batteries within the rear units which provide power to these devices. Several commenters stated that if FRA were to limit the operating speed of trains experiencing en route failures of the devices then a performance standard related to battery charge would probably work since railroads would have an incentive to keep them charged.

In addition to battery-charge requirements, there was some discussion as to what would be required at the initial terminal with regard to testing the devices to ensure they are capable of initiating a brake application from the rear of the train. Several parties commented that there were several different methods for testing such ability. Basically, four possible methods for testing the devices were identified in the various comments. One method would be to attach the device to the rear of the train and then have the controlling locomotive transmit an emergency brake application signal with the front unit causing an emergency application to be initiated from the rear of the train, thereby having the entire train effectuate an emergency application of the brakes. A second method would be to attach the device to the rear of the train, close the angle cock on the last or second-to-the-last car of the train (an angle cock is a lever which permits the closing of the brake pipe so that no air can travel past that point in the brake pipe), and then have the controlling locomotive transmit an emergency brake application signal from the front unit. Under this method only the last one or two cars of the train would effectuate an emergency brake application as the closed angle cock would prevent further propagation of the signal down the trainline. The third method would involve a check of the emergency valve on the rear unit after the unit is attached and armed, without placing any cars in the train into emergency. This method would require an emergency application to be transmitted by the controlling locomotive and then a visual check of the emergency valve on the rear unit to ensure the valve functions properly. The final method of inspection would be a bench test of the device which would be performed prior to the device being

armed and placed on the train. One commenter suggested that if bench testing is permitted it should be required to be done within a short time prior to the device being placed on the train. The BRC recommended that, in addition to testing requirements, the FRA needed to require additional periodic inspections and maintenance to ensure the devices are working properly.

In the NPRM, FRA also proposed to extend the calibration period for all EOTs from 92 days to 365 days. *See* 59 FR 47700, 47731. Currently, the regulations require one-way EOTs to be calibrated for accuracy every 92 days. *See* 49 CFR 232.19(h)(3). FRA based this proposed extension not only on its own experience but also on the comments received from several parties that the devices are fairly reliable and can operate for years without calibration. Furthermore, FRA stated that the 92-day calibration period was established at a time when there was little experience with the devices, noting that since that time, not only has calibration of the devices not proven to be a problem, but technology has further improved the reliability of the devices. Although several commenters, both at the ANPRM and NPRM stage, commented on the unreliability of the devices, these comments generally addressed either the failure of the railroads to properly perform the calibrations or the misuse of the devices. Comments submitted subsequent to the public regulatory conference basically reiterated the positions expressed previously. The AAR and manufacturers of the devices supported a 365-day calibration period, stating that the calibration of the devices does not drift periodically and that when the devices fail they fail completely, as the calibration of the devices does not deteriorate over time. One manufacturer commented that the mean time between failures of its devices is in excess of 15,000 hours. The BRC restated its objection to the proposed extension of the calibration period citing carrier abuses of the devices and the extreme operating conditions under which the devices are used.

Conclusions

FRA intends to adopt a performance standard relative to both the requirements for charging batteries as well as testing requirements at the initial terminal or point of installation of the devices. FRA agrees with many of the commenters that rather than merely picking a percentage of watt-hours to which the batteries must be charged at initial terminals, it would be much more effective to establish a performance standard for this requirement. Due to the fact that FRA intends to impose a speed limitation on trains that experience en route failures of the devices and since a vast majority of the en route failures are attributable to dead batteries, FRA believes there is a major incentive to the railroads to ensure the batteries are sufficiently charged. Consequently, FRA intends to establish a standard that requires the batteries on the rear unit to be sufficiently charged at the initial terminal or point of installation and throughout the train's trip to ensure that the device will remain operative throughout the trip. This requirement is only intended to apply to the batteries supporting the telemetry capabilities of the devices. Furthermore, as recommended by several commenters and agreed to by carrier representatives, FRA will impose a strict liability standard regarding failures due to insufficiently charged batteries; that is, it will be a per se violation if a device fails en route due to insufficiently charged batteries. FRA will rely on witness statements, interviews, and carrier repair records to establish whether a failure of the device was the result of insufficiently charged batteries.

FRA also intends to require that the devices be inspected at the initial terminal or other point of installation to ensure that the device is capable of initiating an emergency brake application from the rear of the train. Rather than require a specific method of ensuring this capability, FRA will permit the railroads to develop a method that best fits the circumstances and their operations. At this time, FRA recognizes four different methods, discussed in detail above, that would be sufficient to test this capability; they include: dumping the whole train into emergency once the device is attached; closing the angle cock on the last one or two cars and then activating an emergency application on those cars; inspection and testing of the emergency valve on the device once it is attached to ensure it functions properly without placing any cars in emergency; and bench testing the devices prior to their being armed and placed on the train within a reasonable time period prior to attaching the device to the train. Use of a method other than those listed above will not be permitted if FRA finds that it does not sufficiently ensure that the device is capable of initiating an emergency brake application. Due to the speed limitation being imposed for en route failures, FRA does not believe it is necessary to mandate additional inspections or maintenance as the carriers have sufficient incentive to ensure the devices are adequately maintained.

No new information was provided FRA in relation to the proposed extension of the calibration requirements from 92 days to 365 days. Consequently, FRA continues to believe, based on its own experiences and the comments submitted, that these devices are fairly reliable and can be operated for long periods of time without calibration problems. FRA believes that the current 92-day requirement is outdated due to improved technology and is not consistent with the reality that calibration of these devices has not proven to be a problem. Furthermore, FRA believes that much of the abuse and misuse of these devices cited by one commenter will be corrected due to the restrictions imposed on trains operating with devices that are defective or fail en route.

Section-by-Section Analysis

As most of the issues and provisions have been discussed and addressed in detail in the preceding discussions, this section-by-section analysis will explain the provisions of the final rule and changes from the NPRM by briefly highlighting the rationales or referring to the prior discussion. The discussions and conclusions contained above should be considered in conjunction with the analysis contained below. Each comment received has been considered by FRA in preparing this final rule. Because the provisions regarding two-way EOTs were part of a much broader NPRM addressing all power brake provisions, the section citations in the final rule will vary considerably from the citations referred to in the NPRM.

Section 232.21

This new section of the regulations contains design standards for two-way EOTs. Except for a few modifications, as noted below, this section essentially contains the same requirements as proposed in the NPRM at § 232.117 (59 FR 47731). This section indicates that two-way EOTs are to be designed not only in accordance with the standards contained in this section but also those contained in § 232.19 applicable to one-way devices, except those in § 232.19(b)(3). FRA intends that enforcement actions taken pursuant to these design and performance requirements would be principally focused at manufacturers of the devices. It is noted that, failure to use a device meeting the design and performance criteria contained in this section could

result in enforcement action against a railroad pursuant to § 232.23(b).

FRA has eliminated the requirement regarding the automatic restoration of the braking function by the rear equipment within 60 seconds after it has initiated an emergency application as proposed in the NPRM at § 232.117(e). FRA agrees with many of the commenters that requiring the braking function to be automatically restored within 60 seconds after an emergency application has been initiated would hinder the safe practices of many railroads with regard to inspecting the train after an emergency application is made or leaving the train within the control of the locomotive engineer.

Subsections (a)-(g) are unchanged from the provisions proposed in the NPRM at § 232.117(a)-(d) and (f)-(h). These requirements pertain to the design and performance of the front and rear units necessary to ensure that a proper communication link exists between the front and rear units and to ensure that a safe and timely emergency brake application can and is initiated from the rear of the train. The only comments received regarding any of these provisions related to subsections (e) and (f). As noted earlier, one commenter requested that a separate, labeled, and protected emergency switch should not be mandated if the EOT's emergency application could be integrated into the existing emergency brake controls. As previously stated, FRA is unfamiliar with the technology that would integrate the EOT's emergency application with the existing emergency brake controls and thus, does not feel elimination of this requirement is appropriate. FRA believes that such technology would best be introduced through a waiver or possibly through future regulations addressing the introduction of new technology, currently under consideration by the Railroad Safety Advisory Committee working group on freight power brakes.

In the Notice of Public Regulatory Conference, FRA attempted to clarify the proposal regarding the availability of the front-to-rear communications link being checked automatically by stating that the NPRM inadvertently contained a 10-minute, instead of a 10-second, requirement. *See* 61 FR 6614. Several parties commented on this clarification, including the manufacturers of the devices, stating that the 10-second requirement would be impossible to meet with current technology and would result in a battery drain within a short time. These commenters stated that FRA correctly proposed a 10-minute requirement in the NPRM as that is the current industry standard and has been the standard for devices used in Canada for several years. FRA agrees with these commenters and will leave the requirement at 10 minutes as proposed in the NPRM.

Subsection (h) has been modified slightly from that proposed in the NPRM at § 232.117(i) by replacing the word ''its'' with the phrase ''a properly.'' This revision is made in response to a recommendation by the AAR that some leeway be provided in the requirement that the rear unit only respond to front unit of that train to permit railroads to activate the rear unit from a location other than the front unit of the train, provided it can be done in such a way as to ensure the security of such a procedure. FRA believes the revised language permits the rear unit to respond to an emergency command from any properly associated front unit and, thus, should permit the flexibility desired by some railroads.

Section 232.23

This new section of the regulations contains the operating requirements related to two-way EOTs. This section also contains general applicability standards and identifies those operations excepted from the requirements related to two-way EOTs.

Subsection (a) contains the definitions of key terms necessary for identifying those operations excepted from the requirements related to two-way EOTs. These definitions are intended solely for determining the applicability of the requirements related to two-way EOTs and should not be used in connection with other provisions contained in FRA regulations. With the exception of the definition of a ''train'' contained in (a)(2), the other definitions contained in this section have been revised from those proposed in the NPRM at § 232.5 (59 FR 47723-26) based on a review of the accident data and the comments received.

Heavy Grade

(For a detailed discussion of the all the comments, issues, and conclusions involving this definition, interested parties should review the preceding discussion regarding the definition of heavy grade contained in part A of the ''Discussion of Comments and Conclusions'' portion of this document.) Although FRA used the term ''mountain grade'' to describe this idea in previous proposals, FRA has determined, in order to avoid confusion and remain consistent with the statutory provision, it will use the term ''heavy grade'' in the final rule. FRA will use a bi-level approach in defining heavy grade, using the total trailing tons of the train as one factor in determining whether a train is operating on a heavy grade and, thus, subject to the requirements related to two-way EOTs. A train operating with 4,000 trailing tons or less will be considered to be operating on a heavy grade if a section of track over which it operates has an average grade of 2 percent or greater for a distance of 2 miles. A train operating with greater than 4,000 trailing tons will be considered to be operating on a heavy grade if a section of track over which it operates has an average grade of 1 percent or greater for 3 miles. FRA feels this definition is consistent with the available accident data and addresses many of the concerns raised in the comments submitted.

Local Train

(See part the preceding ''Discussion of Comments and Conclusions'' portion of this document under the heading ''Applicability'' for a detailed discussion of this issue.) Although FRA believes Congress intended an exception for local trains, FRA believes that Congress intended for the term to be narrowly construed. Rather than attempt to narrowly construe the term in the exceptions portion of the rule as was done in the NPRM, FRA decided to narrowly define the term based on the traditional idea of what constitutes a local train. Consequently, FRA has limited the distance such a train moves to that which can be operated by a single crew in a single tour of duty and has limited the size of the trains to 4,000 trailing tons or less. FRA also believes this definition is consistent with the overall structure of these requirements. If a train, even though designated by a railroad as a local train, falls outside the parameters contained in this definition then, it will be considered an ordinary train subject to the two-way EOT requirements.

Work Train

(See the preceding ''Discussion of Comments and Conclusions'' portion of this document under the heading ''Applicability'' for a detailed discussion of this issue.) FRA used the same reasoning for defining work trains as is it did for local trains. If a train fails to meet the definition contained in this subsection, even though labeled a work train by the railroad, it will be considered an ordinary train subject to the two-way EOT requirements.

Subsection (b) contains the general requirement for equipping trains with two-way EOTs. FRA recognizes that the Class I, II, and III railroads have voluntarily committed to equip the vast

majority of the trains covered by these rules by the effective date of the requirements. Therefore, FRA believes that an effective date of July 1, 1997 is a realistic deadline for complying with these requirements. FRA will consider extending this date only in the event that manufacturing delays result in a railroad's inability to secure an adequate number of the devices; however, FRA will not consider extension of the effective date beyond the statutorily mandated date of December 31, 1997. This section also provides that in order to be properly equipped the two-way EOT must meet the performance criteria contained in § 232.21.

Subsections (c) and (d) basically contain the statutory requirements regarding present and future purchases of EOT devices. These provisions require that all EOTs purchased after one year from the date of publication of these requirements shall have two-way capabilities meeting the design and performance requirements contained in § 232.21 and that all two-way devices acquired prior to the promulgation of this rules shall be grandfathered as meeting the design and performance requirements contained in § 232.21. In essence, these requirements eventually result in one-way EOTs being gradually phased out of use as they are replaced by two-way EOTs.

Subsection (e) contains a listing of those trains that are excepted from the requirements relating to two-way EOTs, previously proposed in the NPRM at § 232.813(e) (59 FR 47743). The majority of the exceptions were specifically provided for in the statute. See 49 U.S.C. § 20141(c). FRA has revised the exceptions contained in paragraphs (e)(1) and (e)(2) from those proposed in the NPRM, in order to clarify the scope of the exceptions. Paragraph (e)(1) has been rewritten to ensure that the locomotive located in the rear third of the train has the capability to initiate an emergency brake application and is in continuous communication with the controlling locomotive. Paragraph (e)(2) has been revised to clarify that the exception is for trains operating in a push mode only if the locomotive at the rear of the train has the ability to initiate an emergency brake application from that location. Paragraph (e)(3) has been revised to ensure that the caboose is manned by a crew member and is equipped with an emergency brake valve. The local and work train exceptions contained in paragraphs (e)(6) and (e)(7) have been revised from those proposed in the NPRM to remain consistent with the definitions contained in subsection (a) and are limited in that the exception does not apply if these types of trains are operating on heavy grade. As the definitions of both ''local train'' and ''work train'' limit their size to 4,000 trailing tons or less, heavy grades for these trains will be sections of track with an average grade of 2 percent or greater for 2 miles. (See the preceding ''Discussion of Comments and Conclusions'' portion of this document under the ''Applicability'' heading for a detailed discussion of this issues related to local and work trains and other exceptions.)

Subsection (f)(1) requires that the devices be properly armed and operable at the time a train departs from the point where the device is installed. FRA believes that this requirement, although not specifically contained in the NPRM, could have be inferred from the proposed initial terminal requirements regarding these devices at § 232.309 (59 FR 47734) and the testing and inspection requirements contained in § 232.25. However, several commenters wanted a specific provision contained in the final regulations to prevent any confusion or misunderstanding.

Subsection (f)(2) contains the performance standard related to the amount of battery charge required when the devices are in use. The standard requires that the batteries on the rear units be sufficiently charged at the train's initial terminal or the point where the device is installed and throughout the train's trip to ensure that the device will remain operative until the train reaches destination. In the NPRM at § 232.309(e) (59 FR 57734), FRA proposed a 75 watt-hour requirement for the batteries at initial terminals; however, based the comments received as discussed above, FRA believes this is an ideal situation in which to use a performance standard. Due to the speed restrictions being mandated for en route failures, coupled with FRA's intent to apply strict liability for en route failures due to insufficiently charged batteries, FRA feels there are sufficient incentives for railroads to ensure that the batteries on the rear units are sufficiently charged at all times. This requirement is intended only to apply to the batteries supporting the telemetry capabilities of the devices. FRA does not intend this provision to require that the place where the batteries should be sufficiently charged for the train to reach its final destination should be the initial terminal or the point where the device is installed; it is within the railroad's discretion to determine when and where the batteries will be charged, and railroads should be cognizant of their strict liability for failure of the batteries en route and mindful of the speed restrictions that will be imposed. (See the preceding ''Discussion of Comments and Conclusions'' portion of this document under the ''Inspection and Calibration'' heading for a detailed discussion of this issue.)

Subsection (g) contains the speed restriction being placed on trains that experience en route failure of the devices. This is identical to the restriction proposed in the NPRM at § 232.815(f) (59 FR 47743). This subsection also contains the definition of when a loss of communication between the front and rear units will be considered an en route failure. If a train experiences an en route failure of the two-way EOT, it will be required to limit its speed to 30 mph. FRA believes this is a logical outgrowth of the requirement that trains operating in excess of 30 mph be equipped with the devices. FRA believes that failure of these devices will be very rare and that the concerns raised by several commenters regarding the costs and delays associated with this requirement are not justified. FRA further believes that many of the failures currently reported will be greatly reduced since a majority of them are the result of depleted batteries, which FRA feels will be a thing of the past due to this speed restriction and the requirements contained in this rule regarding the charging of batteries. The definition of when a loss of communication between the front an rear units will be considered an ''en route failure'' is based on the automatic communications built into the devices. FRA does not intend for brief losses of communication to be considered failures en route since these brief gaps should be overcome by the increase in the wattage at which the emergency signal is transmitted and continuous rate at which the signal calling for an emergency brake application is transmitted. (See the preceding ''Discussion of Comments and Conclusions'' portion of this document under the ''En Route Failures'' heading for a detailed discussion of these issues.)

Paragraph (g)(1) of this subsection contains the operating restrictions for trains which experience en route failures of the two-way EOT when operating on especially heavy grades. Although FRA believes that the requirements limiting the speed of a train operating with a defective device, as well as the inspection and battery charge requirements, are sufficient to ensure the prompt repair or replacement of defective units and to ensure that the devices will be operational throughout a train's trip in most instances, FRA

believes that additional safeguards must be provided when a train experiences a failure of its two-way EOT when operating on particularly heavy grades. FRA believes these added safeguards are necessary for those trains that operate over sections of track with an average grade of 2 percent or greater for 2 continuous miles. (See the preceding ''Discussion of Comments and Conclusions'' portion of this document under the ''En Route Failures'' heading for a detailed discussion of these issues.)

Section 232.25

This new section of the regulation contains the inspection, testing, and calibration requirements related to EOT devices. This section contains the provisions previously contained in § 232.19(h) but with some revisions, as noted below.

Subsections (a) and (b) basically contain the provisions previously contained in § 232.19(h)(1) and (h)(2). Although these provisions previously pertained only to one-way EOTs, FRA intends them to be equally applicable to two-way EOTs and proposed that in the NPRM at § 232.115 (59 FR 47730). The provisions contain the language ''after each installation'' as proposed in order to clarify when these requirements are to be performed.

Subsection (c) contains a type of performance standard test that is to be performed at the initial terminal of the train or at the point where a two-way EOT is first installed on the train, as an EOT device may not always be installed at the initial terminal. At these locations the devices must be tested to ensure that they are capable of initiating an emergency brake application from the rear of the train. In the preceding discussion, FRA indicated that it intended to leave it to the railroad's discretion as to how this test will be conducted. FRA recognized that there are currently four different acceptable methods of performing this test: dumping the whole train into emergency once the device is attached; closing the angle cock on the last one or two cars and then activating an emergency of those cars; inspection of the emergency valve on the device once it is attached to ensure it functions properly without placing any cars into emergency; and bench testing the devices prior to their being armed and placed on the train within a reasonable time period of attaching the device to the train. FRA also noted that use of a method other than those contained above will not be permitted, if FRA finds that it does not sufficiently ensure that the device is capable of initiating an emergency brake application. This subsection also requires that if the testing of the device is conducted by an individual other than a member of the train crew then the locomotive engineer be informed that the test was performed. (See the preceding ''Discussion of Comments and Conclusions'' portion of this document under the ''Inspection and Calibration'' heading for a detailed discussion of these issues.)

Subsection (d) contains the calibration and recordkeeping requirements for EOT devices as previously proposed in the NPRM at § 232.115(h)(3) (59 FR 47731). FRA continues to believe, based on its own experiences and the comments submitted, that these devices are fairly reliable and can be operated for long periods of time without calibration problems. FRA believes that the current 92-day requirement is excessive due to improved technology and is not consistent with the reality that calibration of these devices has not proven to be a problem. Furthermore, FRA believes that much of the abuse and misuse of these devices cited by one commenter will be corrected due to the restrictions imposed on trains operating with devices that are defective or fail en route. (See the preceding ''Discussion of Comments and Conclusions'' portion of this document under the ''Inspection and Calibration'' heading for a detailed discussion of these issues.)

Regulatory Impact

This rulemaking is the result of a specific and direct legislative mandate that required use of an existing technology to prevent accidents caused by obstructions of train air brake lines. FRA has sought to carry out that mandate, issuing regulations necessary for safety. FRA has also conducted a regulatory impact analysis and an assessment of impacts upon small entities under the Regulatory Flexibility Act.

The final rule seeks to prevent very serious accidents associated with loss of braking control on freight trains, focusing on scenarios posing serious risk while avoiding the creation of exceptions that could undermine the purpose the statute sought to achieve. Analysis conducted in support of this proceeding has assisted in the crafting of a final rule that provides flexibility to employ various technologies to achieve the regulatory purpose.

The analysis below reports the results of economic analysis using historical data as the basis for estimating future risk, discusses the limitations of that approach, and indicates the agency's rationale for striking the balance included in the final rule. A key component of that rationale is the recognition that the actual consequences of catastrophic accidents are difficult or even impossible to predict. Given the grave potential for serious consequences from accidents caused by loss of braking control on freight trains, FRA has applied that focus on risk reduction. The natural consequence of that strategy is relief for smaller railroads operating lighter trains at reduced speeds, except in the limited instances where very heavy grades must be negotiated.

The consequences of an accident caused by a run-away train tend to be extreme, with potential for deaths, economic disruption and lasting environmental damage. An example of this type of disaster, discussed below, occurred on February 1, 1996 in Cajon Pass in California. The value of casualties, which included: 2 fatalities, 1 severe injury, and 32 minor injuries (32 emergency responders required medical treatment due to inhalation of toxic chemicals) combined with damages due to railroad property damage and casualties, would be approximately $9.8 million. Costs to the United States Environmental Protection Agency for monitoring environmental clean-up and mitigation (through May 1996) were $16,014. The costs to the involved railroad for environmental damages were estimated at approximately $4.2 million. These damages are included in the economic analysis discussed below with a total value of approximately $14 million, for railroad property, casualties, and environmental damages.

Executive Order 12866 and DOT Regulatory Policies and Procedures

This final rule has been evaluated in accordance with existing regulatory policies and procedures and is considered to be significant under DOT policies and procedures (44 FR 11304) because of Congressional and public interest in promoting rail safety. This final rule has also been reviewed under Executive Order 12866 and is considered ''significant'' under that Order. Consequently, FRA has prepared a regulatory evaluation addressing the economic impact of the proposed rule. The regulatory evaluation estimates the economic costs and consequences of this proposed rule as well as its anticipated benefits and impacts. This regulatory evaluation has been placed in the docket and is available for public inspection and copying during normal business hours on the Seventh Floor, Office of Chief Counsel, FRA, 1120 Vermont Avenue, N.W., Washington, D.C. Copies may also be obtained by

submitting a written request to the FRA Docket Clerk at Room 8201, 400 Seventh Street, S.W., Washington, D.C. 20590.

Potential costs and benefits of the proposed rule were calculated for a 20-year period using the seven percent discount rate required by Federal regulatory guidelines. It is estimated that the net present value (NPV) costs associated with the rule total approximately $264 million over the 20-year period of analysis. Our analysis of the historical accidents that could have been prevented by two-way EOTs indicates that about three accidents per year may not have occurred had these devices been in place. Assuming that the same type of accidents would continue to occur in the absence of two-way devices, we have calculated that the benefit of installing these devices will result in a reduction of accidents, casualties and damages worth approximately $92 million over 20 years (again, discounted to present value).

Although FRA identified 26 potentially preventable accidents in its Notice of Public Regulatory Conference (61 FR 6615), the number of potentially preventable accidents was reduced to sixteen for purposes of this regulatory impact analysis based on comments received and an application of the provisions of this final rule to the factual situations of each of the accidents. In quantifying the benefits related to this final rule, FRA generally identified two types of accidents which could be prevented through the use of two-way EOTs. These included accidents due to brake pipe obstruction and accidents due to other brake related problems. An effectiveness rate was then assigned to each of the accidents based on the level of confidence by FRA safety experts that the accidents could have been prevented had the train been equipped and used a two-way EOT. The property damages and costs related to injuries and fatalities associated with each of the potentially preventable accidents are contained in Table 1 below.

TABLE 1—POTENTIALLY PREVENTABLE ACCIDENTS

DATE	PLACE	CAUSE	INJURIES	FATALITIES	RR PROPERTY UPDATED TO 12/95 $	RATE OF EFFECTIVENESS	ACCIDENTS PREVENTABLE BENEFIT
910918	Sprague, WA	OBSTRUCTED BRAKE PIPE.	4	1	$4,327,634	0.9	$6,883,771
910304	Waterfall, WY	OTHER BRAKE RELATED.	4	0	1,626,483	0.5	824,041
920307	Kansas City, MO	OBSTRUCTED BRAKE PIPE.	2	0	492,307	0.9	452,796
920611	Money, MS	OTHER BRAKE RELATED.	2	0	677,113	0.5	343,956
931001	Keystone, NB	OBSTRUCTED BRAKE PIPE.	2	0	2,653,038	0.9	2,463,064
931011	Fulton, KY	OTHER BRAKE RELATED.	0	0	14,589	0.5	7,295
931221	Wood, IA	OTHER BRAKE RELATED.	0	0	428,535	0.5	214,268
931225	Seward, NB	OBSTRUCTED BRAKE PIPE.	4	0	1,947,358	0.9	3,575,122
940118	Cowen, WV	OBSTRUCTED BRAKE PIPE.	0	0	1,381,380	0.9	1,243,242
940907	Gillette, WY	OTHER BRAKE RELATED.	0	0	3,677,160	0.9	3,309,444
941122	Tenn Pass, CO	OBSTRUCTED BRAKE PIPE.	1	0	1,503,495	0.9	3,206,020
941214	Cajon, CA	OBSTRUCTED BRAKE PIPE.	3	0	4,058,544	0.9	3,936,999
950209	Nelsons, WI	OTHER BRAKE RELATED.	1	0	30,696	0.9	65,291
950406	Argonne, MI	OTHER BRAKE RELATED.	0	1	268,529	0.9	2,671,676
960201	Cajon, CA	OBSTRUCTED BRAKE PIPE.	32	2	3,756,294	0.9	15,851,369
960214	E. St. Paul, MN	OBSTRUCTED BRAKE PIPE.	9	0	2,723,956	0.9	3,504,965
	TOTAL		65	4	29,567,109		48,553,320

Although the quantified benefits of the proposed rule are exceeded by the estimated costs, with a NPV cost of approximately $172 million over 20 years, FRA believes that the accident information collected by FRA does not adequately reflect the true costs to society due to brake-related accidents. Further, as discussed below, considerable variation in accident severity can be expected.

The potential benefits, which have not been quantified in this analysis due to a lack of information, may equal or substantially exceed the benefits which have been quantified. As shown in the most recent ''preventable'' accidents identified by FRA, there is a significant risk that similar accidents in the future could release large amounts of hazardous materials which, if the accident occurred in a densely populated or environmentally sensitive area, could produce truly catastrophic results. The costs of evacuation and medical treatment for those near the accident site could be substantial, and associated road closures also produce significant economic impact to travelers

and the communities nearby. Should a hazardous material release impact a river or stream, the consequences to wildlife in the area could also be severe and lasting. The costs associated with these types of accidents could be extremely high and, as these types of costs (potential benefits) have not been calculated in this analysis, the benefit estimations are extremely conservative. For cost/benefit analyses to serve their purpose well, all reasonably foreseeable damages should be accounted for, not merely those that have already chanced to occur.

Evaluation of Risk and Requirements to Equip Trains

The FRA recognizes that the base case economic analysis for this rulemaking suggests caution. Nevertheless, the FRA has determined that exceptions to the requirement for two-way EOTs should be drawn with great care, respecting the intent of the statutory exceptions without creating potential loopholes that could seriously erode the beneficial safety impacts intended by the Congress. In doing so, FRA has been mindful of the need to ensure impacts on small entities are limited to the extent possible given the specific commands of the congressional mandate. These choices have caused FRA to focus on train speed, grade, and tonnage as critical factors in determining what trains should be equipped with two-way EOTs and in determining the appropriate response when this equipment fails en route. FRA has proceeded in this manner both because the agency wished to be faithful to the level of safety determined by the statute to be appropriate in this context and because a common sense approach to analysis of the appropriate risks indicates the need to act decisively. This approach recognizes the role of accident frequency, accident causation, and accident severity.

In addition to performing an economic analysis employing historic accident patterns to project future risk (and thus prospective benefits), FRA has considered the potential volatility of the future risk associated with absence of two-way EOTs. When the Congress began hearings on the legislation that underlies this rulemaking in 1991, advocates of the technology were hard-pressed to cite specific and sustainable examples of accidents potentially preventable through use of two-way telemetry. A decade had just closed during which cabooses had been removed from trains, and initial experience had been relatively favorable. From the perspective of 1996, the need for this technology is much more evident, with the frequency of preventable events having proven higher than would have been expected. Accidents preventable by this technology *but involving trains not utilizing the technology* have continued into the current year, notwithstanding the fact that railroads have, in fact, made strides toward full compliance with two-way EOT requirements by the outside statutory deadline of December 31, 1997 (an effort recently accelerated to meet earlier voluntary deadlines).

The consequences of an accident depend on many factors which may not be related to the cause of the accident, such as the location of the train or the lading it transports. In either a densely populated or environmentally sensitive area, the consequences of an accident may be more severe than an accident in a less critical location. Likewise, a hazardous materials release is much more likely to have more severe effects (such as death, explosions, or environmental damage) than a grain spill in the same location. When considering the potential benefits which may be produced by avoiding the type of brake-related accidents targeted by this rule, it is therefore not sufficient to look only at the consequences of past accidents with similar causes. One should also look for indications in those past accidents for the reasonable potential for greater catastrophe. In this context, accidents caused by loss of braking control on freight trains (as can occur, among other reasons, due to brake pipe obstructions) tend to have a rather high potential for casualties, very substantial property damage, and considerable risk of environmental damage when hazardous materials are in the consist. Because derailment or collision will often occur due to overturning on curves or entering congested areas, third party casualties and property damage can also be substantial.

An example of the potential severity of an accident caused by loss of braking control, other than those noted above, may be illustrated by the circumstances surrounding the accident occurring on May 12, 1989 in which a Southern Pacific Transportation Company train accelerated out of control descending a 2.2 percent grade into San Bernardino, California. Two employees were killed and three injured. The accident destroyed seven residences adjacent to the right-of-way, killing two residents and injuring a third. A 14-inch gasoline pipeline which may have been damaged in either the accident or ensuing clean-up, ruptured 13 days later, resulting in the death of two additional residents, serious injuries to two residents, and minor injuries to 16 others. Eleven additional homes were destroyed, along with 21 motor vehicles. Total property damages in the derailment and pipeline rupture exceeded $14 million. While this accident was not preventable through use of a two-way EOT system, exactly the same consequences could result from a loss of control that would be preventable by this technology.

Another example would be the accident that occurred at Helena, Montana, on February 2, 1989, in which freight cars from a Montana Rail Link train rolled eastward down a mountain grade and struck a helper locomotive consist, slightly injuring two crew members. Hazardous materials in the consist included hydrogen peroxide, isopropyl alcohol, and acetone. Release of these hazardous materials later resulted in a fire and explosions, necessitating the evacuation of approximately 3,500 residents of Helena for over two days. According to the National Transportation Safety Board, railroad and other property damage exceeded $6 million, and all of the buildings of Carroll College sustained damage. The City of Helena received 154 reports of property damage from residents within a three-mile radius of the accident. As a result of this accident, the Board recommended that FRA ''require the use of two-way end-of-train telemetry devices on all cabooseless trains for the safety of railroad operations.'' (NTSB Report RAR–89/05 at 19–20, 76.) Although in FRA's judgment it is unlikely that the Helena accident would, in fact, have been prevented by a two-way EOT system due to the prior gradual leakage of brake pipe pressure from the train line, other potential accidents with similar or even more serious consequences certainly could be prevented.

Consequently, based on the potential for catastrophic results of an accident of this type, FRA cannot make the finding that a less restrictive rule would be consistent with safety. A train without the ability to properly control its speed and stop due to brake problems represents an unacceptable risk to tolerate, given the availability of relatively inexpensive and highly reliable technology that can greatly reduce or even eliminate that risk. Existing types of automatic train brakes generally fail safe, but not when there is an obstruction of the train line. As noted above, train line obstructions are known to occur. The technology mandated by this rule addresses this need, and use of the technology will provide a high level of confidence that the failure mode will not permit a catastrophe. That is, it is not necessary to speculate regarding the

existence of an unacceptable hazard nor the effectiveness of the countermeasure. As affirmed by the 1992 congressional mandate, it would be irresponsible public policy to withhold action until the occurrence of an accident or accidents of sufficient magnitude to permit completion of an economic analysis showing a positive benefit-to-cost ratio for the primary case.

FRA believes this legislatively mandated rule balances the need to reduce the risk of a truly catastrophic event with the need to minimize costs to freight railroad operations. FRA has not been able to identify additional exceptions to the requirement for two-way EOTs that could be considered to be consistent with safety, given the hazard addressed by the statutory mandate and the realities of railroad operations.

Regulatory Flexibility Act

The Regulatory Flexibility Act of 1980 (5 U.S.C. 601 *et seq.*) requires an assessment of the impacts of proposed rules on small entities, unless the Secretary certifies that the rule will not have a significant economic impact on a substantial number of small entities.

The Small Business Administration (SBA) uses an industry wide definition of small business based on employment. Railroads are considered small by SBA definition if they employ fewer than 1,500 people. FRA typically employs the classification system of the Surface Transportation Board (STB), which is based on operating revenue, where a Class II railroad has operating revenue greater or equal to $40 million dollars but less than $253.7 million and a Class III railroad has operating revenue below $39 million. This proposed rule affects many of the larger regional railroads and some of the larger short line railroads (i.e, Class II and III railroads). After consulting with the Office of Advocacy of the SBA, the STB/FRA classification system was used in this analysis.

Most short line railroads (Class III) will not be required to purchase or use two-way EOTs, and thus, will not be affected by the provisions of this final rule. The American Short Line Railroad Association (ASLRA), an organization that represents short line railroads, submitted comments to FRA Docket No. PB–9 subsequent to the public regulatory conference conducted in March of 1996 which referenced the results of a survey they had conducted of their member railroads. Their survey results indicated that out of a total of 287 railroads that responded to the survey, only 32 railroads operate at speeds in excess of 30 mph and only 21 of the railroads operate in heavy grades of two percent over two miles. Of the 21 railroads operating in these heavy grades 17 of them operate trains with an average tonnage of less than 4,000 trailing tons. The ASLRA recommended that lower tonnage trains be excluded from any definition of heavy grade. After reviewing the accident data, FRA has adopted a definition of heavy grade based on a two-tier approach which permits trains operating with 4,000 trailing tons or less to operate over certain heavy grades (less than 2% over 2 miles) without being equipped with a two-way EOT.

Although the ASLRA did not have an opportunity to comment on the definition of heavy grade for heavier trains, conversations with ASLRA representatives and FRA track experts indicate that between 50 and 70 percent of short line railroads operate trains in territory where an average grade of one percent over three miles would be encountered. However, most of these railroads do not operate at speeds greater than 30 mph, nor do they have average train tonnage in excess of 4,000 trailing tons. It is believed that the rule will primarily impact only those short line railroads which operate in heavy grades of two percent or greater over a distance of two miles. The ASLRA estimated that its member railroads would need to acquire approximately 1,100 two-way EOTs to comply the proposal submitted by the AAR. In the regulatory impact analysis FRA estimated the number of devices required by short line railroads to be 1,146 in order to comply with the final rule.

In reviewing the economic impact of the rule, FRA has concluded that it will have a small economic impact on small entities. Therefore, it is certified that this rule will not have a significant economic impact on a substantial number of small entities under the provisions of the Regulatory Flexibility Act.

FRA has prepared a regulatory flexibility assessment addressing the impact of the final rule on small entities. The regulatory flexibility assessment has been placed in the docket and is available for public inspection and coping during normal business hours in on the Seventh Floor, Office of Chief Counsel, FRA, 1120 Vermont Avenue, N.W., Washington, D.C. Copies may also be obtained by submitting a written request to the FRA Docket Clerk at Room 8201, 400 Seventh Street, S.W., Washington, D.C. 20590.

Paperwork Reduction Act

This final rule contains information collection requirements. Because the policy of the Federal Government is to minimize the regulatory record keeping burden placed on private industry, a separate analysis of the record keeping burden resulting from the final rule was performed.

FRA will submit these information collection requirements to the Office of Management and Budget (OMB) for approval under the provisions of the Paperwork Reduction Act of 1980, 44 U.S.C. 3501 *et seq.* Persons desiring to comment regarding the burden estimate or any other aspect of this collection of information, including suggestions for reducing this burden, should submit their views in writing to: Ms. Gloria Swanson, Office of Safety, RRS–21, Federal Railroad Administration, 400 Seventh Street, S.W., Room 8314, Washington, D.C. 20590; and to the Office of Information and Regulatory Affairs, Office of Management and Budget, ATTN: Desk Officer for FRA (OMB No. 2130-New), New Executive Office Building, 726 Jackson Place, N.W., Room 3201, Washington, D.C. 20503. Copies of any such comments should also be submitted to the Docket Clerk, Office of Chief Counsel, Federal Railroad Administration, 400 Seventh Street, S.W., Room 8201, Washington, D.C. 20590.

OMB is required to make a decision concerning the collection of information requirements contained in this final rule between 30 and 60 days after publication of this document in the Federal Register. Therefore, a comment to OMB is best assured of having its full effect if OMB receives it within 30 days of publication.

FRA cannot impose a penalty on persons for violating information collection requirements when they do not display a current OMB control number, if required. FRA intends to obtain current OMB control numbers for any new or revised information collection requirements resulting from this rulemaking action prior to the effective date of this final rule. The OMB control number, when assigned, will be announced by separate notice in the Federal Register.

Environmental Impact

FRA has evaluated this final rule in accordance with its procedures for ensuring full consideration of the environmental impact of FRA actions, as required by the National Environmental Policy Act (42 U.S.C. 4321 *et seq.*), other environmental statutes, Executive Orders, and DOT Order 5610.1c. It has been determined that this final rule will not have any effect on the quality of the environment.

Federalism Implications

This final rule will not have a substantial effect on the States, on the relationship between the national government on the States, or on the distribution of power and responsibilities among the various levels of government. Thus, in accordance with Executive Order 12612, preparation of a Federalism Assessment is not warranted.

List of Subjects

49 CFR Part 232

Railroad safety, Railroad power brakes, Two-way end-of-train devices.

The Rule

In consideration of the foregoing, FRA amends chapter II, subtitle B of title 49, Code of Federal Regulations as follows:

PART 232—RAILROAD POWER BRAKES AND DRAWBARS

1. The authority citation for part 232 is revised to read as follows:

Authority: 49 U.S.C. 20102, 20103, 20107, 20108, 20110-20112, 20114, 20133, 20301–20304, 20701–20703, 21301, 21302, 21304, and 21311; Pub. L. 103–272 (1994); and 49 CFR 1.49 (c), (g), and (m).

2. Section 232.19 is amended by removing paragraph (h), by revising the section heading and by revising paragraph (a) to read as follows:

§232.19 Design standards for one-way end-of-train devices.

(a) A one-way end-of-train device shall be comprised of a rear-of-train unit (rear unit) located on the last car of a train and a front-of-train unit (front unit) located in the cab of the locomotive controlling the train.

* * * * *

3. Sections 232.21, 232.23, and 232.25 are added to read as follows:

§232.21 Design and performance standards for two-way end-of-train devices.

Two-way end-of-train devices shall be designed and perform with the features applicable to one-way end-of-train devices described in §232.19, except those included in §232.19(b)(3). In addition, a two-way end-of-train device shall be designed and perform with the following features:

(a) An emergency brake application command from the front unit of the device shall activate the emergency air valve at the rear of the train within one second.

(b) The rear unit of the device shall send an acknowledgment message to the front unit immediately upon receipt of an emergency brake application command. The front unit shall listen for this acknowledgment and repeat the brake application command if the acknowledgment is not correctly received.

(c) The rear unit, on receipt of a properly coded command, shall open a valve in the brake line and hold it open for a minimum of 15 seconds. This opening of the valve shall cause the brake line to vent to the exterior.

(d) The valve opening and hose shall have a minimum diameter of ¾ inch to effect an emergency brake application.

(e) The front unit shall have a manually operated switch which, when activated, shall initiate an emergency brake transmission command to the rear unit. The switch shall be labeled ''Emergency'' and shall be protected so that there will exist no possibility of accidental activation.

(f) The availability of the front-to-rear communications link shall be checked automatically at least every 10 minutes.

(g) Means shall be provided to confirm the availability and proper functioning of the emergency valve.

(h) Means shall be provided to arm the front and rear units to ensure the rear unit responds to an emergency command only from a properly associated front unit.

§232.23 Operations requiring use of two-way end-of-train devices; prohibition on purchase of nonconforming devices.

(a) The following definitions are intended solely for the purpose of identifying those operations subject to the requirements for the use of two-way end-of-train devices.

(1) *Heavy grade* means:

(i) For a train operating with 4,000 trailing tons or less, a section of track with an average grade of two percent or greater over a distance of two continuous miles; and

(ii) For a train operating with greater than 4,000 trailing tons, a section of track with an average grade of one percent or greater over a distance of three continuous miles.

(2) *Train* means one or more locomotives coupled with one or more rail cars, except during switching operations or where the operation is that of classifying cars within a railroad yard for the purpose of making or breaking up trains.

(3) *Local train* means a train assigned to perform switching en route which operates with 4,000 trailing tons or less and travels between a point of origin and a point of final destination, for a distance that is no greater than that which can normally be operated by a single crew in a single tour of duty.

(4) *Work train* means a non-revenue service train of 4,000 trailing tons or less used for the administration and upkeep service of the railroad.

(5) *Trailing tons* means the sum of the gross weights—expressed in tons—of the cars and the locomotives in a train that are not providing propelling power to the train.

(b) All trains not specifically excepted in paragraph (e) of this section shall be equipped with and shall use either a two-way end-of-train device meeting the design and performance requirements contained in § 232.21 or a device using an alternative technology to perform the same function.

(c) Each newly manufactured end-of-train device purchased by a railroad after (one year from date of publication) shall be a two-way end-of-train device meeting the design and performance requirements contained in § 232.21 or a device using an alternative technology to perform the same function.

(d) Each two-way end-of-train device purchased by any person prior to promulgation of these regulations shall be deemed to meet the design and performance requirements contained in § 232.21.

(e) The following types of trains are excepted from the requirement for the use of a two-way end-of-train device:

(1) Trains with a locomotive capable of making an emergency brake application, through a command effected by telemetry or by a crew member in radio contact with the lead (controlling) locomotive, located in the rear third of the train length;

(2) Trains operating in the push mode with the ability to effectuate an emergency brake application from the rear of the train;

(3) Trains with an operational caboose placed at the rear of the train, carrying one or more crew members, that is equipped with an emergency brake valve;

(4) Trains operating with a secondary, fully independent braking system capable of safely stopping the train in the event of failure of the primary system;

(5) Trains that do not operate over heavy grades and do not exceed 30 mph;

(6) Local trains as defined in paragraph (a)(3) of this section that do not operate over heavy grades;

(7) Work trains as defined in paragraph (a)(4) of this section that do not operate over heavy grades;

(8) Trains that operate exclusively on track that is not part of the general railroad system; and

(9) Passenger trains with emergency brakes.

(f) If a train is required to use a two-way end-of-train device:

(1) That device shall be armed and operable from the time a train departs

from the point where the device is installed until the train reaches its destination.

(2) The rear unit batteries shall be sufficiently charged at the initial terminal or other point where the device is installed and throughout the train's trip to ensure that the end-of train-device will remain operative until the train reaches its destination.

(g) If a two-way end-of-train device or equivalent device fails en route (i.e., is unable to initiate an emergency brake application from the rear of the train due to certain losses of communication or due to other reasons), the speed of the train on which it is installed shall be limited to 30 mph until the ability of the device to initiate an emergency brake application from the rear of the train is restored. This limitation shall apply to a train using any device that uses an alternative technology to serve the purpose of a two-way end-of-train device. With regard to two-way end-of-train devices, a loss of communication between the front and rear units will be considered an en route failure only if the loss of communication is for a period greater than 16 minutes and 30 seconds.

(1) If a two-way end-of-train device fails en route, the train on which it is installed, in addition to observing the 30-mph speed limitation, shall not operate over a section of track with an average grade of two percent or greater over a distance of two continuous miles, unless one of the following alternative measures is provided:

(i) Use of an occupied helper locomotive at the end of the train. This alternative may be used only if the following requirements are met:

(A) The helper locomotive engineer will initiate and maintain two-way voice radio communication with the engineer on the head end of the train; this contact shall be verified just prior to passing the crest the grade.

(B) If there is a loss of communication prior to passing the crest of the grade, the helper locomotive engineer and the head-end engineer shall act immediately to stop the train until voice communication is resumed, if this can be done safely.

(C) If there is a loss of communication once the descent has begun, the helper locomotive engineer and the head-end engineer shall act to stop the train if the train has reached a predetermined rate of speed that indicates the need for emergency braking.

(D) The brake pipe of the helper locomotive shall be connected and cut into the train line and tested to ensure operation.

(ii) Use of an occupied caboose at the end of the train with a tested, functioning brake valve capable of initiating an emergency brake application from the caboose. This alternative may be used only if the train service employee in the caboose and the engineer on the head end of the train establish and maintain two-way voice radio communication and respond appropriately to the loss of such communication in the same manner as prescribed for helper locomotives in paragraph (g)(1)(i) of this section.

(iii) Use of a radio-controlled locomotive in the rear third of the train under continuous control of the engineer in the head end by means of telemetry, but only if such radio-controlled locomotive is capable of initiating an emergency application on command from the lead (controlling) locomotive.

§ 232.25 Inspection and testing of end-of-train devices.

(a) After each installation of either the front or rear unit of an end-of-train device, or both, on a train and before the train departs, the railroad shall determine that the identification code entered into the front unit is identical to the unique identification code on the rear-of-train unit.

(b) After each installation of either the front or rear unit of an end-of-train device, or both, the functional capability of the device shall be determined, after charging the train, by comparing the quantitative value displayed on the front unit with the quantitative value displayed on the rear unit or on a properly calibrated air gauge. The end-of-train device shall not be used if the difference between the two readings exceeds three pounds per square inch.

(c) A two-way end-of-train device shall be tested at the initial terminal or other point of installation to ensure that the device is capable of initiating an emergency power brake application from the rear of the train. If this test is conducted by a person other than a member of the train crew, the locomotive engineer shall be informed that the test was performed.

(d) The telemetry equipment shall be calibrated for accuracy according to the manufacturer's specifications at least every 365 days. The date of the last calibration, the location where the calibration was made, and the name of the person doing the calibration shall be legibly displayed on a weather-resistant sticker or other marking device affixed to the outside of both the front unit and the rear unit.

4. Appendix A to Part 232—''Schedule of Civil Penalties'' is amended by removing the entry for § 232.19(h) and by adding entries for §§ 232.21, 232.23, and 232.25 to read as follows:

Appendix A to Part 232—Schedule of Civil Penalties

* * * * *

Section	Violation	Willful violation
*	*	*
*	*	*
*		
232.21 Two-way EOTs:		
(a)-(h) Design Standards	2,500	5,000
232.23 Operating Standards:		
(b) Failure to equip	5,000	7,500
(c) Purchases	2,500	5,000
(f)(1) Device not armed or operable	5,000	7,500
(2) Insufficient battery charge	2,500	5,000
(g) En route failures	5,000	7,500
232.25 Inspection and Testing:		
(a) Unique code	2,500	5,000
(b) Comparing values	2,500	5,000
(c) Test of emergency capability	5,000	7,500
(d) Calibration	2,500	5,000

Issued in Washington, D.C., on December 27, 1996.

S. Mark Lindsey,

Acting Administrator.

[FR Doc. 96–33364 Filed 12–31–96; 8:45 am]

BILLING CODE 4910–06–P

federal register

Thursday
January 2, 1997

Part VII

The President

Presidential Determination No. 97–11A—Determination Pursuant to Section 523 of the Foreign Operations, Export Financing, and Related Programs Appropriations Act, 1997 (as Enacted in Public Law 104–208)

Federal Register
Vol. 62, No. 1
Thursday, January 2, 1997

Presidential Documents

Title 3—

The President

Presidential Determination No. 97–11A of December 6, 1996

Determination Pursuant to Section 523 of the Foreign Operations, Export Financing, and Related Programs Appropriations Act, 1997 (as Enacted in Public Law 104–208)

Memorandum for the Secretary of State

Pursuant to section 523 of the Foreign Operations, Export Financing, and Related Programs Appropriations Act, 1997 (as enacted in Public Law 104–208), I hereby certify that withholding from international financial institutions and other international organizations and programs funds appropriated or otherwise made available pursuant to that Act is contrary to the national interest.

You are authorized and directed to publish this determination in the Federal Register.

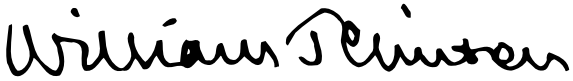

THE WHITE HOUSE,
Washington, December 6, 1996.

[FR Doc. 96–33393
Filed 12–31–96; 8:45 am]
Billing code 4710–10–P

Reader Aids

Federal Register

Vol. 62, No. 1

Thursday, January 2, 1997

CUSTOMER SERVICE AND INFORMATION

Federal Register/Code of Federal Regulations	
General Information, indexes and other finding aids	**202–523–5227**
Laws	
For additional information	**523–5227**
Presidential Documents	
Executive orders and proclamations	**523–5227**
The United States Government Manual	**523–5227**
Other Services	
Electronic and on-line services (voice)	**523–4534**
Privacy Act Compilation	**523–3187**
TDD for the hearing impaired	**523–5229**

ELECTRONIC BULLETIN BOARD

Free Electronic Bulletin Board service for Public Law numbers, Federal Register finding aids, and list of documents on public inspection. **202–275–0920**

FAX-ON-DEMAND

You may access our Fax-On-Demand service. You only need a fax machine and there is no charge for the service except for long distance telephone charges the user may incur. The list of documents on public inspection and the daily Federal Register's table of contents are available using this service. The document numbers are 7050-Public Inspection list and 7051-Table of Contents list. The public inspection list will be updated immediately for documents filed on an emergency basis.

NOTE: YOU WILL ONLY GET A LISTING OF DOCUMENTS ON FILE AND NOT THE ACTUAL DOCUMENT. Documents on public inspection may be viewed and copied in our office located at 800 North Capitol Street, N.W., Suite 700. The Fax-On-Demand telephone number is: **301–713–6905**

FEDERAL REGISTER PAGES AND DATES, JANUARY

1–300 2

CFR PARTS AFFECTED DURING JANUARY

At the end of each month, the Office of the Federal Register publishes separately a List of CFR Sections Affected (LSA), which lists parts and sections affected by documents published since the revision date of each title.

REMINDERS

The items in this list were editorially compiled as an aid to Federal Register users. Inclusion or exclusion from this list has no legal significance.

RULES GOING INTO EFFECT TODAY

ENVIRONMENTAL PROTECTION AGENCY

Air quality planning purposes; designation of areas:
- Connecticut; published 11-15-96

FEDERAL COMMUNICATIONS COMMISSION

Television broadcasting:
- Children's television broadcast services; published 8-27-96

FEDERAL HOUSING FINANCE BOARD

Federal home loan bank system:
- Employees selection and compensation and Finance Office Director selection; Federal regulatory reform; published 1-2-97

HEALTH AND HUMAN SERVICES DEPARTMENT

Health Care Financing Administration

Medicare:
- Medicare payment suspension charges and determination of allowable interest expenses; published 12-2-96

LIBRARY OF CONGRESS

Copyright Office, Library of Congress

Copyright arbitration royalty panel rules and regulations; technical amendments; published 12-2-96

TRANSPORTATION DEPARTMENT

Coast Guard

Merchant marine officers and seamen:
- Commercial vessel personnel; chemical drug and alcohol testing programs; drug testing in foreign waters; published 12-18-96

Regattas and marine parades:
- Events requiring permits, written notices, or neither; identification; published 6-26-96

TRANSPORTATION DEPARTMENT

Air travel; nondiscrimination on basis of disability:
- Lifts and boarding facilitation devices, etc.
  - Correction; published 1-2-97

TRANSPORTATION DEPARTMENT

Federal Aviation Administration

Airworthiness directives:
- Pratt & Whitney; published 12-2-96
- Transport category airplanes--
  - Carbon dioxide; allowable concentration in cabins; published 12-2-96

TRANSPORTATION DEPARTMENT

Federal Highway Administration

Motor carrier safety standards:
- Intermodal transportation; published 8-19-96

TRANSPORTATION DEPARTMENT

National Highway Traffic Safety Administration

Motor vehicle safety standards:
- Occupant crash protection--
  - Smart air bags, vehicles without; warning labels, manual cutoff switches, etc. reduction of dangerous impacts on children; published 1-2-97

TREASURY DEPARTMENT

Fiscal Service

Book-entry Treasury bonds, notes, and bills:
- Revised Article 8 of Uniform Commercial Code; determination of substantially identical State statute; California; published 1-2-97

TREASURY DEPARTMENT

Internal Revenue Service

Employment taxes and collection of income taxes at source:
- Form W-4; electronic filing; published 1-2-97

Excise taxes:
- Return and time for filing requirement; published 1-2-97

Income taxes:
- Controlled foreign corporations; foreign base company and foreign personal holding company income; definitions; published 1-2-97

VETERANS AFFAIRS DEPARTMENT

Medical benefits:
- Adult day health care, community residential care, and veterans with alcohol and drug dependence disorders contract programs--
  - Incorporations by reference; update; published 12-2-96

COMMENTS DUE NEXT WEEK

AGRICULTURE DEPARTMENT

Federal Crop Insurance Corporation

Administrative regulations:
- Nonstandard underwriting classification system; comments due by 1-6-97; published 11-7-96

AGRICULTURE DEPARTMENT

Food Safety and Inspection Service

Meat and poultry inspection:
- Meat/bone separation machinery and meat recovery systems; data and informationsolicitation; comments due by 1-7-97; published 11-8-96

AGRICULTURE DEPARTMENT

Rural Utilities Service

Electric loans:
- Electric transmission specifications and drawings (34.5 kV to 69 kV and 115 kV to 230 kV) for use on RUS financed electric systems; comments due by 1-7-97; published 11-8-96

COMMERCE DEPARTMENT

Acquisition regulations:
- Acquisition processes; streamlining; comments due by 1-10-97; published 11-26-96

COMMERCE DEPARTMENT

National Oceanic and Atmospheric Administration

Endangered and threatened species:
- West Coast steelhead; comments due by 1-6-97; published 10-29-96

Fishery conservation and management:
- Caribbean, Gulf, and South Atlantic fisheries--
  - Reef fish fishery of Gulf of Mexico; comments due by 1-9-97; published 11-25-96
- Northeastern United States fisheries--
  - Atlantic mackerel, squid, and butterfish; comments due by 1-6-97; published 12-11-96
  - Summer flounder, scup, and Black Sea bass; comments due by 1-6-97; published 12-9-96
- West Coast States and Western Pacific fisheries--
  - Western Pacific bottomfish fishery; comments due by 1-10-97; published 11-27-96

DEFENSE DEPARTMENT

Civilian health and medical program of uniformed services (CHAMPUS):
- Health promotion and disease prevention visits and immunizations; comments due by 1-6-97; published 11-5-96

ENVIRONMENTAL PROTECTION AGENCY

Acquisition regulations:
- Headquarters policy support contractors; eligibility; comments due by 1-6-97; published 11-7-96

Air quality implementation plans; approval and promulgation; various States:
- Colorado; comments due by 1-6-97; published 12-6-96

Clean Air Act:
- State operating permits programs--
  - Connecticut; comments due by 1-6-97; published 12-6-96

FEDERAL COMMUNICATIONS COMMISSION

Common carrier services:
- Satellite communications--
  - Non-voice non-geostationary mobile satellite service; comments due by 1-6-97; published 12-31-96

Practice and procedure:
- Formal complaints filed against common carriers; processing; comments due by 1-6-97; published 12-26-96

Radio stations; table of assignments:
- Colorado; comments due by 1-6-97; published 12-10-96
- Mississippi; comments due by 1-6-97; published 12-2-96
- Missouri; comments due by 1-6-97; published 12-2-96
- Utah; comments due by 1-6-97; published 12-2-96
- Washington; comments due by 1-6-97; published 12-2-96

FEDERAL RESERVE SYSTEM

Truth in lending (Regulation Z):

Official staff commentary; comments due by 1-6-97; published 11-27-96

HEALTH AND HUMAN SERVICES DEPARTMENT

Food and Drug Administration

Food additives:

Adjuvants, production aids, and sanitizers--

1,4-bis[(2,4,6-trimethylphenyl)amino]-9,10-anthracenedione; comments due by 1-9-97; published 12-10-96

INTERIOR DEPARTMENT

Land Management Bureau

Geothermal resources leasing and operations; comments due by 1-6-97; published 10-8-96

Land resource management:

Land exchanges; comments due by 1-6-97; published 12-6-96

Management, use, and protection of public lands

Criminal penalties for misuse; comments due by 1-6-97; published 11-7-96

Minerals management:

Surface management of mineral activities within Bodie Bowl under 1994 Bodie Protection Act; comments due by 1-7-97; published 11-8-96

JUSTICE DEPARTMENT

Conflict of interests; comments due by 1-9-97; published 11-25-96

JUSTICE DEPARTMENT

Prisons Bureau

Institutional management:

Incoming publications; nudity or sexually explicit material or information; distribution to inmates; comments due by 1-6-97; published 11-6-96

LABOR DEPARTMENT

Conflict of interests; comments due by 1-6-97; published 11-6-96

NUCLEAR REGULATORY COMMISSION

Enforcement actions policy and procedure:

Radiation protection programs; comments due by 1-9-97; published 12-10-96

PERSONNEL MANAGEMENT OFFICE

Employment:

Temporary and term employment; appointing system streamlining; comments due by 1-10-97; published 12-11-96

Voting rights program:

Jefferson and Galveston Counties, TX; comments due by 1-9-97; published 12-10-96

SMALL BUSINESS ADMINISTRATION

Small business size standards:

Nonmanufacture rule; waivers--

Airborne integrated data components; comments due by 1-6-97; published 12-13-96

TRANSPORTATION DEPARTMENT

Coast Guard

Drawbridge operations:

Louisiana; comments due by 1-10-97; published 12-27-96

TRANSPORTATION DEPARTMENT

Federal Aviation Administration

Airworthiness directives:

Airbus; comments due by 1-8-97; published 11-29-96

AlliedSignal Inc.; comments due by 1-6-97; published 11-6-96

Bombardier; comments due by 1-6-97; published 11-6-96

Class E airspace; comments due by 1-7-97; published 11-27-96

TRANSPORTATION DEPARTMENT

National Highway Traffic Safety Administration

Motor vehicle safety standards:

Motor vehicles, motor vehicle engines and the environment; international regulatory harmonization; comments due by 1-6-97; published 11-14-96

TRANSPORTATION DEPARTMENT

Transportation Statistics Bureau

Motor Carrier Financial and Operating Data Collection Program Negotiated Rulemaking Committee:

Intent to establish; comments due by 1-8-97; published 12-9-96

TREASURY DEPARTMENT

Internal Revenue Service

Income taxes:

Magnetc media filing requirements for information returns; comments due by 1-8-97; published 10-10-96

CFR ISSUANCES 1997
Complete Listing of 1996 Editions and Projected January, 1997 Editions

This list sets out the CFR issuances for the 1996 editions and projects the publication plans for the **January, 1997** quarter. A projected schedule that will include the **April, 1997** quarter will appear in the first **Federal Register** issue of April.

For pricing information on available 1996–1997 volumes consult the CFR checklist which appears every Monday in the Federal Register.

Pricing information is not available on projected issuances. The weekly CFR checklist and the monthly List of CFR Sections Affected will continue to provide a cumulative list of CFR titles and parts, revision date and price of each volume.

Normally, CFR volumes are revised according to the following schedule:

Titles 1–16—January 1
Titles 17–27—April 1
Titles 28–41—July 1
Titles 42–50—October 1

All volumes listed below will adhere to these scheduled revision dates unless a notation in the listing indicates a different revision date for a particular volume.

Titles revised as of January 1, 1996:

Title

CFR Index

1–2 (Revised as of Feb. 1, 1996)

3 (Compilation)

4

5 Parts:
1–699
700–1199
1200–End

6 [Reserved]

7 Parts:
0–26
27–45
46–51
52
53–209
210–299
300–399
400–699
700–899
900–999
1000–1199
1200–1499
1500–1899
1900–1939
1940–1949
1950–1999
2000–End

8

9 Parts:
1–199
200–End

10 Parts:
0–50
51–199
200–399
400–499
500–End

11

12 Parts:
1–199
200–219
220–299
300–499
500–599
600–End

13 (Revised as of Mar. 1, 1996)

14 Parts:
1–59
60–139
140–199
200–1199
1200–End

15 Parts:
0–299
300–799
800–End

16 Parts:
0–149
150–999
1000–End

Titles revised as of April 1, 1996:

Title

17 Parts:
1–199
200–239
240–End

18 Parts:
1–149
150–279
280–399
400–End

19 Parts:
1–140
141–199
200–End

20 Parts:
1–399
400–499
500–End

21 Parts:
1–99
100–169
170–199
200–299
300–499
500–599
600–799
800–1299
1300–End

22 Parts:
1–299
300–End

23

24 Parts:
0–199 (Revised May 1, 1996)
200–219 (Revised May 1, 1996)
220–499 (Revised May 1, 1996)
500–699 (Revised May 1, 1996)
700–899 (Revised May 1, 1996)
900–1699 (Revised May 1, 1996)
1700–End (Revised May 1, 1996)

25

26 Parts:
1 (§§ 1.0-1–1.60)
1 (§§ 1.61–1.169)
1 (§§ 1.170–1.300)
1 (§§ 1.301–1.400)
1 (§§ 1.401–1.440)
1 (§§ 1.441–1.500)
1 (§§ 1.501–1.640)
1 (§§ 1.641–1.850)
1 (§§ 1.851–1.907)
1 (§§ 1.908–1.1000)
1 (§§ 1.1001–1.1400)
1 (§ 1.1401–End)
2–29
30–39
40–49
50–299
300–499
500–599 (Cover only)
600–End

27 Parts:
1–199
200–End

Titles revised as of July 1, 1996:

Title

28 Parts:
0–42
43–End

29 Parts:
0–99
100–499
500–899
900–1899
1900–1910.999
1910.1000–End
1911–1925
1926
1927–End

30 Parts:
1–199
200–699
700–End

31 Parts:
0–199
200–End

32 Parts:
1–190
191–399
400–629
630–699 (Cover only)
700–799
800–End

33 Parts:
1–124
125–199
200–End

34 Parts:
1–299
300–399
400–End

35

36 Parts:
1–199
200–End

37

38 Parts:
0–17
18–End

39

40 Parts:
1–51
52
53–59
60
61–71
72–80
81–85
86
87–135
136–149
150–189
190–259
260–299
300–399
400–424

425–699
700–789
790–End

41 Parts:
Chs. 1–100
Ch. 101
Chs. 102–200
Ch. 201–End

Titles revised as of October 1, 1996:

Title

42 Parts:
1–399
400–429
430–End

43 Parts:
1–999
1000–End

44

45 Parts:
1–199
200–499
500–1199
1200–End

46 Parts:
1–40
41–69
70–89
90–139
140–155
156–165
166–199
200–499
500–End

47 Parts:
0–19
20–39
40–69
70–79
80–End

48 Parts:
Ch. 1 (1–51)
Ch. 1 (52–99)
Ch. 2 (201–251)
Ch. 2 (252–299)
Chs. 3–6
Chs. 7–14
Ch. 15–28
Ch. 29–End

49 Parts:
1–99
100–185
186–199
200–399
400–999
1000–1199
1200–End

50 Parts:
1–199
200–599
600–End

Projected January 1, 1997 issuances:

Title

CFR Index

1–2 (Revised as of Feb. 1, 1997)

3 (Compilation)

4

5 Parts:
1–699
700–1199
1200–End

6 [Reserved]

7 Parts:
0–26
27–52
53–209
210–299
300–399
400–699
700–899
900–999
1000–1199
1200–1499
1500–1899
1900–1939
1940–1949
1950–1999
2000–End

8

9 Parts:
1–199
200–End

10 Parts:
0–50
51–199
200–499
500–End

11

12 Parts:
1–199
200–219
220–299
300–499
500–599
600–End

13

14 Parts:
1–59
60–139
140–199
200–1199
1200–End

15 Parts:
0–299
300–799
800–End

16 Parts:
0–999
1000–End

TABLE OF EFFECTIVE DATES AND TIME PERIODS—JANUARY 1997

This table is used by the Office of the Federal Register to compute certain dates, such as effective dates and comment deadlines, which appear in agency documents. In computing these dates, the day after publication is counted as the first day.

When a date falls on a weekend or holiday, the next Federal business day is used. (See 1 CFR 18.17)

A new table will be published in the first issue of each month.

DATE OF FR PUBLICATION	15 DAYS AFTER PUBLICATION	30 DAYS AFTER PUBLICATION	45 DAYS AFTER PUBLICATION	60 DAYS AFTER PUBLICATION	90 DAYS AFTER PUBLICATION
January 2	January 17	February 3	February 18	March 3	April 2
January 3	January 21	February 3	February 18	March 4	April 3
January 6	January 21	February 5	February 20	March 7	April 7
January 7	January 22	February 6	February 21	March 10	April 7
January 8	January 23	February 7	February 24	March 10	April 8
January 9	January 24	February 10	February 24	March 10	April 9
January 10	January 27	February 10	February 24	March 11	April 10
January 13	January 28	February 12	February 27	March 14	April 14
January 14	January 29	February 13	February 28	March 17	April 14
January 15	January 30	February 14	March 3	March 17	April 15
January 16	January 31	February 18	March 3	March 17	April 16
January 17	February 3	February 18	March 3	March 18	April 17
January 21	February 5	February 20	March 7	March 24	April 21
January 22	February 6	February 21	March 10	March 24	April 22
January 23	February 7	February 24	March 10	March 24	April 23
January 24	February 10	February 24	March 10	March 25	April 24
January 27	February 11	February 26	March 13	March 28	April 28
January 28	February 12	February 27	March 14	March 31	April 28
January 29	February 13	February 28	March 17	March 31	April 29
January 30	February 14	March 3	March 17	March 31	April 30
January 31	February 18	March 3	March 17	April 1	May 1