1–10–97
Vol. 62 No. 7
Pages 1383–1658

federal register

Friday
January 10, 1997

Briefings on how to use the Federal Register
For information on briefings in Washington, DC, see announcement on the inside cover of this issue

Now Available Online

Code of Federal Regulations

via

GPO Access

(Selected Volumes)

Free, easy, online access to selected *Code of Federal Regulations (CFR)* volumes is now available via *GPO Access*, a service of the United States Government Printing Office (GPO). *CFR* titles will be added to *GPO Access* incrementally throughout calendar years 1996 and 1997 until a complete set is available. GPO is taking steps so that the online and printed versions of the *CFR* will be released concurrently.

The *CFR* and *Federal Register* on *GPO Access*, are the official online editions authorized by the Administrative Committee of the Federal Register.

New titles and/or volumes will be added to this online service as they become available.

http://www.access.gpo.gov/nara/cfr

For additional information on ***GPO Access*** products, services and access methods, see page II or contact the *GPO Access* User Support Team via:

★ Phone: toll-free: 1-888-293-6498
★ Email: gpoaccess@gpo.gov

FEDERAL REGISTER Published daily, Monday through Friday, (not published on Saturdays, Sundays, or on official holidays), by the Office of the Federal Register, National Archives and Records Administration, Washington, DC 20408, under the Federal Register Act (49 Stat. 500, as amended; 44 U.S.C. Ch. 15) and the regulations of the Administrative Committee of the Federal Register (1 CFR Ch. I). Distribution is made only by the Superintendent of Documents, U.S. Government Printing Office, Washington, DC 20402.

The Federal Register provides a uniform system for making available to the public regulations and legal notices issued by Federal agencies. These include Presidential proclamations and Executive Orders and Federal agency documents having general applicability and legal effect, documents required to be published by act of Congress and other Federal agency documents of public interest. Documents are on file for public inspection in the Office of the Federal Register the day before they are published, unless earlier filing is requested by the issuing agency.

The seal of the National Archives and Records Administration authenticates this issue of the Federal Register as the official serial publication established under the Federal Register Act. 44 U.S.C. 1507 provides that the contents of the Federal Register shall be judicially noticed.

The Federal Register is published in paper, 24x microfiche and as an online database through *GPO Access*, a service of the U.S. Government Printing Office. The online edition of the Federal Register on *GPO Access* is issued under the authority of the Administrative Committee of the Federal Register as the official legal equivalent of the paper and microfiche editions. The online database is updated by 6 a.m. each day the Federal Register is published. The database includes both text and graphics from Volume 59, Number 1 (January 2, 1994) forward. Free public access is available on a Wide Area Information Server (WAIS) through the Internet and via asynchronous dial-in. Internet users can access the database by using the World Wide Web; the Superintendent of Documents home page address is http://www.access.gpo.gov/su__docs/, by using local WAIS client software, or by telnet to swais.access.gpo.gov, then login as guest, (no password required). Dial-in users should use communications software and modem to call (202) 512–1661; type swais, then login as guest (no password required). For general information about *GPO Access*, contact the *GPO Access* User Support Team by sending Internet e-mail to gpoaccess@gpo.gov; by faxing to (202) 512–1262; or by calling toll free 1–888–293–6498 or (202) 512–1530 between 7 a.m. and 5 p.m. Eastern time, Monday–Friday, except for Federal holidays.

The annual subscription price for the Federal Register paper edition is $494, or $544 for a combined Federal Register, Federal Register Index and List of CFR Sections Affected (LSA) subscription; the microfiche edition of the Federal Register including the Federal Register Index and LSA is $433. Six month subscriptions are available for one-half the annual rate. The charge for individual copies in paper form is $8.00 for each issue, or $8.00 for each group of pages as actually bound; or $1.50 for each issue in microfiche form. All prices include regular domestic postage and handling. International customers please add 25% for foreign handling. Remit check or money order, made payable to the Superintendent of Documents, or charge to your GPO Deposit Account, VISA or MasterCard. Mail to: New Orders, Superintendent of Documents, P.O. Box 371954, Pittsburgh, PA 15250–7954.

There are no restrictions on the republication of material appearing in the Federal Register.

How To Cite This Publication: Use the volume number and the page number. Example: 60 FR 12345.

SUBSCRIPTIONS AND COPIES

PUBLIC	
Subscriptions:	
Paper or fiche	202–512–1800
Assistance with public subscriptions	512–1806
General online information	202–512–1530 1–888–293–6498
Single copies/back copies:	
Paper or fiche	512–1800
Assistance with public single copies	512–1803
FEDERAL AGENCIES	
Subscriptions:	
Paper or fiche	523–5243
Assistance with Federal agency subscriptions	523–5243

For other telephone numbers, see the Reader Aids section at the end of this issue.

NOW AVAILABLE ONLINE

The January 1997 Office of the Federal Register Document Drafting Handbook

Free, easy, online access to the newly revised January 1997 Office of the Federal Register Document Drafting Handbook (DDH) is now available at:

http://www.nara.gov/nara/fedreg/ddh/ddhout.html

This handbook helps Federal agencies to prepare documents for publication in the Federal Register.

For additional information on access, contact the Office of the Federal Register's Technical Support Staff.

Phone: 202–523–3447

E-mail: info@fedreg.nara.gov

FEDERAL REGISTER WORKSHOP

THE FEDERAL REGISTER: WHAT IT IS AND HOW TO USE IT

FOR: Any person who uses the Federal Register and Code of Federal Regulations.

WHO: Sponsored by the Office of the Federal Register.

WHAT: Free public briefings (approximately 3 hours) to present:

1. The regulatory process, with a focus on the Federal Registers system and the public's role in the development of regulations.
2. The relationship between the Federal Register and Cod of Federal Regulations.
3. The important elements of typical Federal Register documents.
4. An introduction to finding aids of the FR/CFR system.

WHY: To provide the public with access to information necessary to research Federal agency regulations which directly affect them. There will be no discussion of specific agency regulations.

WASHINGTON, DC

WHEN: January 28, 1997 at 9:00 am

WHERE: Office of the Federal Register
Conference Room
800 North Capitol Street, NW
Washington, DC
(3 blocks north of Union Station Metro)

RESERVATIONS: 202–523–4538

Printed on recycled paper containing 100% post consumer waste

Contents

Federal Register
Vol. 62, No. 7
Friday, January 10, 1997

Agency for Health Care Policy and Research
NOTICES
Meetings:
Health Care Policy and Research Special Emphasis Panel, 1460

Agriculture Department
See Animal and Plant Health Inspection Service
See Forest Service

Air Force Department
NOTICES
Active military service and discharge determinations:
Civilians, all U.S., of American Field Service, who served Overseas Operationally (April 6, 1917-Jan. 1918 and Nov. 10, 1941-Aug. 1945), 1440–1441

Alcohol, Tobacco and Firearms Bureau
RULES
Firearms:
Commerce in explosives—
Explosive materials in the fireworks industry, 1386–1387

Animal and Plant Health Inspection Service
PROPOSED RULES
Interstate transportation of animals and animal products (quarantine):
Brucellosis in cattle and bison—
State and area classifications, 1406–1408

Blind or Severely Disabled, Committee for Purchase From People Who Are
See Committee for Purchase From People Who Are Blind or Severely Disabled

Children and Families Administration
RULES
Head Start Fellows Program, 1399–1401

Coast Guard
RULES
Pollution:
Existing tank vessels without double hulls; structural and operational measures to reduce oil spills, 1622–1637
NOTICES
Committees; establishment, renewal, termination, etc.:
Chemical Transportation Advisory Committee, 1485

Commerce Department
See International Trade Administration
See National Oceanic and Atmospheric Administration

Committee for Purchase From People Who Are Blind or Severely Disabled
NOTICES
Procurement list; additions and deletions, 1426–1429

Defense Department
See Air Force Department
See Navy Department
NOTICES
Meetings:
Wage Committee, 1440

Education Department
NOTICES
Meetings:
National Assessment Governing Board, 1441–1442

Employment Standards Administration
NOTICES
Minimum wages for Federal and federally-assisted construction; general wage determination decisions, 1472–1473

Energy Department
See Federal Energy Regulatory Commission
NOTICES
Electricity export and import authorizations, permits, etc.:
Newco US, L.P., 1442–1443
Meetings:
Environmental Management Site-Specific Advisory Board—
Savannah River Site, 1443–1444

Environmental Protection Agency
RULES
Clean Air Act:
State operating permits programs—
Michigan, 1387–1399
PROPOSED RULES
Air quality implementation plans; approval and promulgation; various States:
Eastern United States, 1420–1423
NOTICES
Environmental statements; availability, etc.:
Agency statements—
Comment availability, 1452
Weekly receipts, 1452–1453
Meetings:
Science Advisory Board, 1453–1454
Water pollution control:
Clean Water Act—
Withdrawal of Phase I total maximum daily loads for copper in New Jersey waters of New York-New Jersey Harbor, 1454–1455

Federal Aviation Administration
RULES
Airworthiness directives:
Airbus; correction, 1383–1384

Federal Communications Commission
PROPOSED RULES
Common carrier services:
Metric conversion of tariff publications and supporting information; termination of proceeding, 1423–1424

Federal Deposit Insurance Corporation
NOTICES
Agency information collection activities:
Proposed collection; comment request, 1455–1456

Practice and procedure:
Alternative dispute resolution; policy statement, 1456

Federal Emergency Management Agency
NOTICES
Disaster and emergency areas:
Hawaii, 1456, 1456
New York, 1457
North Carolina, 1457
Hotel and Motel Fire Safety Act:
National master list, 1640–1642

Federal Energy Regulatory Commission
NOTICES
Applications, hearings, determinations, etc.:
ANR Pipeline Co., 1444
Colorado Interstate Gas Co., 1444–1445
Columbia Gas Transmission Corp., 1445–1446
Eastern Shore Natural Gas Co., 1446
Great Lakes Gas Transmission L.P., 1447
Michigan Gas Storage Co., 1447
Midwestern Gas Transmission Co., 1447
National Power Marketing Co., L.L.C., 1447–1448
Newco US, L.P., 1448
NorAm Gas Transmission Co., 1448
Pacific Gas & Electric Co., 1448–1449
Sea Robin Pipeline Co., 1449
Southern Natural Gas Co., 1449
Texas Eastern Transmission Corp., 1449–1450
Transcontinental Gas Pipe Line Corp., 1450
Williams Natural Gas Co., 1450
Williston Basin Interstate Pipeline Co., 1450–1451
Wyoming Interstate Co., Ltd., 1451
Young Gas Storage Co., Ltd., 1451–1452

Federal Maritime Commission
NOTICES
Agreements filed, etc., 1457–1458

Federal Reserve System
NOTICES
Banks and bank holding companies:
Formations, acquisitions, and mergers, 1458
Permissible nonbanking activities, 1458
Meetings; Sunshine Act, 1458–1459

Federal Trade Commission
NOTICES
Prohibited trade practices:
Phillips Petroleum Co., 1459–1460

Fish and Wildlife Service
RULES
Endangered and threatened species:
Cordia bellonis, 1644–1647
Cumberland elktoe et al., 1647–1658
NOTICES
Endangered and threatened species and marine mammals permit applications, 1468

Food and Drug Administration
NOTICES
Guidance documents:
Autologous somatic cell therapy products—
Chemistry, manufacturing, and controls information and establishment description; availability and comment, 1460–1461
Organization, functions, and authority delegations:
Health and Industry Programs Office, et al., 1462

Forest Service
NOTICES
Meetings:
Eastern Washington Cascades Provincial Interagency Advisory Committee, 1426
Yakima Provincial Interagency Executive Committee Advisory Committee, 1426

Health and Human Services Department
See Agency for Health Care Policy and Research
See Children and Families Administration
See Food and Drug Administration
See Health Resources and Services Administration
See National Institutes of Health

Health Resources and Services Administration
NOTICES
Agency information collection activities:
Proposed collection; comment request, 1462–1463

Housing and Urban Development Department
NOTICES
Grants and cooperative agreements; availability, etc.:
Facilities to assist homeless—
Excess and surplus Federal property, 1466

Indian Affairs Bureau
NOTICES
Grants and cooperative agreements; availability, etc.:
Contract support funds (FY 1997); distribution and use method; guidance availability, 1468–1470
Indian child custody proceedings; jurisdiction reassumption petitions:
Chevak Traditional Council of Chevak, AK, 1470–1471
Forest County Potawatomi Community, WI, 1471

Interior Department
See Fish and Wildlife Service
See Indian Affairs Bureau
See Minerals Management Service
See Surface Mining Reclamation and Enforcement Office
NOTICES
Grants and cooperative agreements; availability, etc.:
Tribal self-governance program—
FY 1998 or Calendar year 1998 participation, 1467–1468
Negotiation and advance planning, 1466–1467

Internal Revenue Service
NOTICES
Agency information collection activities:
Proposed collection; comment request, 1492

International Trade Administration
NOTICES
Antidumping:
Circular welded non-alloy steel pipe from—
Mexico, 1429–1430
Fresh and chilled Atlantic salmon from—
Norway, 1430–1433
Magnesium, pure, from—
China, 1433–1434
Porcelain-on-steel cooking ware from—
Taiwan, 1434–1435
Welded stainless steel pipe from—
Taiwan, 1435–1439

North American Free Trade Agreement (NAFTA); binational panel reviews:
Fresh cut flowers from—
Mexico, 1439

Justice Department
See Justice Programs Office

Justice Programs Office
NOTICES
Agency information collection activities:
Proposed collection; comment request, 1471–1472

Labor Department
See Employment Standards Administration
See Labor Statistics Bureau
See Occupational Safety and Health Administration

Labor Statistics Bureau
NOTICES
Agency information collection activities:
Proposed collection; comment request; correction, 1473

Minerals Management Service
NOTICES
Environmental statements; availability, etc.:
Alaska, Cook Inlet OCS—
Lease sales, 1471

National Aeronautics and Space Administration
NOTICES
Agency information collection activities:
Proposed collection; comment request, 1474–1475
Meetings:
Advisory Council, 1474
Aerospace Safety Advisory Panel, 1474–1475

National Archives and Records Administration
NOTICES
Agency records schedules; availability, 1475

National Highway Traffic Safety Administration
RULES
Motor vehicle safety standards:
Occupant crash protection—
Safety belt fit improvement; Type 2 safety belts for adjustable seats in automobiles with gross weight of 10,000 pounds or less, 1401–1402
NOTICES
Motor vehicle safety standards:
Nonconforming vehicles—
Importation eligibility; determinations, 1485–1486

National Institute for Literacy
NOTICES
Agency information collection activities:
Proposed collection; comment request, 1475–1476

National Institutes of Health
NOTICES
Agency information collection activities:
Proposed collection; comment request, 1463–1464
Meetings:
National Institute of Mental Health, 1464–1465
National Institute of Mental Health, 1466
National Institute on Alcohol Abuse and Alcoholism, 1465
National Institute on Drug Abuse, 1465–1466

National Oceanic and Atmospheric Administration
RULES
Fishery conservation and management:
Caribbean, Gulf, and South Atlantic fisheries—
Coastal migratory pelagic resources, 1402–1403
Northeastern United States fisheries—
Atlantic sea scallop, 1403–1405
PROPOSED RULES
New England Fishery Management Council; public meeting, 1424–1425
NOTICES
Coastal zone management program and estuarine sanctuaries:
Texas Coastal Management Program, 1439–1440
Permits:
Marine mammals, 1440

Navy Department
NOTICES
Environmental statements; availability, etc.:
NIMITZ class nuclear-powered aircraft carriers home port facilities development; U.S. Pacific Fleet, 1441

Nuclear Regulatory Commission
NOTICES
Applications, hearings, determinations, etc.:
Florida Power & Light Co., 1476–1477
Wolf Creek Nuclear Operating Corp., 1478

Occupational Safety and Health Administration
RULES
Safety and health standards, etc.:
Methylene chloride; occupational exposure, 1494–1619

Postal Rate Commission
NOTICES
Meetings; Sunshine Act, 1478

Public Health Service
See Agency for Health Care Policy and Research
See Food and Drug Administration
See Health Resources and Services Administration
See National Institutes of Health

Securities and Exchange Commission
RULES
Organization, functions, and authority delegations:
Director of Market Regulation Division, 1384–1385
Securities:
Customer limit orders; improvement of handling and execution; etc., 1385–1386
NOTICES
Agency information collection activities:
Proposed collection; comment request, 1478
Submission for OMB review; comment request, 1478–1479
Self-regulatory organizations; proposed rule changes:
Cincinnati Stock Exchange, 1480–1481
Applications, hearings, determinations, etc.:
Arch Tax-Exempt Trust, 1479–1480

Social Security Administration
NOTICES
Organization, functions, and authority delegations:
Deputy Commissioner of Systems Office et al., 1481–1484

Surface Mining Reclamation and Enforcement Office
PROPOSED RULES
Permanent program and abandoned mine land reclamation plan submissions:
Montana, 1408–1420

Surface Transportation Board
NOTICES
Railroad operation, acquisition, construction, etc.:
Columbia Port, WA, 1487
Georgetown Railroad Co., 1487
Gilbertson, Peter A., et al., 1487–1488
New York & Atlantic Railway Co., 1488
Respondek Railroad Corp., 1488–1489
Railroad services abandonment:
CSX Transportation, Inc., 1489

Transportation Department
See Coast Guard
See Federal Aviation Administration
See National Highway Traffic Safety Administration
See Surface Transportation Board
NOTICES
Agency information collection activities:
Submission for OMB review; comment request, 1484
Aviation proceedings:
Certificates of public convenience and necessity and foreign air carrier permits; weekly applications, 1484–1485

Treasury Department
See Alcohol, Tobacco and Firearms Bureau
See Internal Revenue Service
NOTICES
Privacy Act:
Systems of records, 1489–1491

Separate Parts In This Issue

Part II
Department of Labor, Occupational Safety and Health Administration, 1494–1619

Part III
Department of Transportation, Coast Guard, 1622–1637

Part IV
Federal Emergency Management Agency, 1640–1642

Part V
Department of the Interior, Fish and Wildlife Service, 1644–1647, 1647–1658

Reader Aids
Additional information, including a list of public laws, telephone numbers, reminders, and finding aids, appears in the Reader Aids section at the end of this issue.

Electronic Bulletin Board
Free Electronic Bulletin Board service for Public Law numbers, Federal Register finding aids, and a list of documents on public inspection is available on 202–275–1538 or 275–0920.

CFR PARTS AFFECTED IN THIS ISSUE

A cumulative list of the parts affected this month can be found in the Reader Aids section at the end of this issue.

9 CFR
Proposed Rules:
78.....1406

14 CFR
39.....1383

17 CFR
200.....1384
240.....1385

27 CFR
55.....1386

29 CFR
1910.....1494
1915.....1494
1926.....1494

30 CFR
Proposed Rules:
926.....1408

33 CFR
157.....1622

40 CFR
70.....1387
Proposed Rules:
52.....1420

45 CFR
1311.....1399

47 CFR
Proposed Rules:
61.....1423

49 CFR
571.....1401

50 CFR
17 (2 documents) 1644
1647
622.....1402
648.....1403
649.....1403
Proposed Rules:
648.....1424

Rules and Regulations

Federal Register
Vol. 62, No. 7
Friday, January 10, 1997

This section of the FEDERAL REGISTER contains regulatory documents having general applicability and legal effect, most of which are keyed to and codified in the Code of Federal Regulations, which is published under 50 titles pursuant to 44 U.S.C. 1510.

The Code of Federal Regulations is sold by the Superintendent of Documents. Prices of new books are listed in the first FEDERAL REGISTER issue of each week.

DEPARTMENT OF TRANSPORTATION

Federal Aviation Administration

14 CFR Part 39

[Docket No. 92–NM–225–AD; Amendment 39–9882; AD 97–01–11]

RIN 2120–AA64

Airworthiness Directives; Airbus Model A300 Series Airplanes

AGENCY: Federal Aviation Administration, DOT.

ACTION: Final rule; correction.

SUMMARY: This document corrects information in an existing airworthiness directive (AD) that is applicable to certain Airbus Model A320 series. The AD requires detailed visual inspections to detect cracking of a certain fuselage frame, and repair, if necessary; and provides for an optional terminating action for the repetitive inspections. The AD was prompted by reports of a fatigue crack found initiating at hole ''I'' of frame 47 on two of these airplanes. The actions specified by the AD are intended to detect and correct such fatigue cracking, which could result in reduced structural integrity of the airplane. This action corrects the applicability of the currently existing AD to cite an airplane model that was inadvertently omitted.

DATES: Effective February 10, 1997.

The incorporation by reference of certain publications listed in the regulations was previously approved by the Director of the Federal Register as of November 4, 1996 (61 FR 50988, September 30, 1996).

FOR FURTHER INFORMATION CONTACT: Charles D. Huber, Aerospace Engineer, Standardization Branch, ANM–113, FAA, Transport Airplane Directorate, 1601 Lind Avenue, SW., Renton, Washington 98055–4056; telephone (206) 227–2589; fax (206) 227–1149.

SUPPLEMENTARY INFORMATION: On September 19, 1996, the FAA issued AD 96–20–02, amendment 39–9768 (61 FR 50988, September 30, 1996) that is applicable to certain Airbus Model A300 series airplanes. That AD requires repetitive detailed visual inspections to detect cracking of fuselage frame 47, and repair, if necessary. It also provides for an optional terminating action for the repetitive inspections.

That action was prompted by reports of a fatigue crack found initiating at hole ''I'' of frame 47 on two of these airplanes. The actions specified by that AD are intended to detect and correct such fatigue cracking, which could result in reduced structural integrity of the airplane.

Actions Since Issuance of AD 96–20–02

Recently, the FAA has become aware of an incongruity between the stated applicability for AD 96–20–02 and certain of the requirements of that AD. Specifically, the applicability statement for AD 96–20–02 was published as follows:

> ''Applicability: Model A300 B2–1C, B2K–3C, B2–203, B4–2C, and B4–103, series airplanes, on which Modification 2626 has not been installed; certificated in any category.''

Paragraph (a)(3) of that AD, however, states:

> ''(3) For *Model A300 B4–203* series airplanes: Perform the inspection prior to the accumulation of 14,100 total landings, or within 50 landings after the effective date of this AD, whichever occurs later.''

Because Model A300 B4–203 series airplanes were not cited in the applicability statement of AD 96–20–02, the only U.S. operator of those models was unsure whether it was required to perform the actions stated in paragraph (a)(3) of the AD. That operator contacted the FAA to resolve this issue.

The FAA acknowledges the discrepancy between the applicability of AD 96–20–02 and the applicability of paragraph (a)(3) of that AD. A typographical error on FAA's part resulted in the Model A300 B4–203 being omitted inadvertently from the applicability statement of that AD. In all other respects, the AD is correct as published.

FAA's Determination

Although the single U.S. operator of Model A300 B4–203 series airplanes has advised the FAA that it will comply with AD 96–20–02 within the compliance time that is stated in that AD, the FAA has determined that it is appropriate to take action to correct AD 96–20–02 to include the Model A300 B4–203 in the applicability statement. Since those airplanes are subject to the unsafe condition addressed by that AD, correction of the applicability of the AD is necessary to ensure that any airplane that is imported and placed on the U.S. Register in the future will be inspected as required.

Corrections Made to the Current AD

This action revises the applicability of AD 96–20–02 by correcting the applicability statement to include Model A300 B4–203 series airplanes.

In making this correction, the formatting of the text of the AD has been revised somewhat: Paragraph (a)(3) that appeared in AD 96–20–02 has been designated as new paragraph (b); it pertains only to the initial inspection action required of Model A300 B4–203 series airplanes. Accordingly, all other paragraphs of the AD have been redesignated to account for the new paragraph (b).

Since this action only clarifies the applicability of an existing rule, it has no additional economic impact and imposes no additional burden on any person. Therefore, notice and public procedures hereon are unnecessary.

Cost Impact

The economic analysis that was iterated in the preamble to AD 96–20–02 correctly included affected Model A300 B4–203 series airplanes in its figures. This correction of the previously-issued AD poses no new, additional economic burden on any operator.

However, for the convenience of all affected operators, the cost impact information is repeated below:

The FAA estimates that 20 airplanes of U.S. registry will be affected by this AD. (Of this number, 2 are Model A300 B4–203 series airplanes.) It will take approximately 10 work hours per airplane to accomplish the required actions, at an average labor rate of $60 per work hour. Based on these figures, the cost impact of the AD on U.S. operators is estimated to be $12,000, or $600 per airplane.

Regulatory Impact

The regulations adopted herein will not have substantial direct effects on the States, on the relationship between the national government and the States, or on the distribution of power and responsibilities among the various levels of government. Therefore, in accordance with Executive Order 12612, it is determined that this final rule does not have sufficient federalism implications to warrant the preparation of a Federalism Assessment.

For the reasons discussed above, I certify that this action (1) is not a ''significant regulatory action'' under Executive Order 12866; (2) is not a ''significant rule'' under DOT Regulatory Policies and Procedures (44 FR 11034, February 26, 1979); and (3) will not have a significant economic impact, positive or negative, on a substantial number of small entities under the criteria of the Regulatory Flexibility Act. A final evaluation has been prepared for this action and it is contained in the Rules Docket. A copy of it may be obtained from the Rules Docket at the location provided under the caption **ADDRESSES.**

List of Subjects in 14 CFR Part 39

Air transportation, Aircraft, Aviation safety, Incorporation by reference, Safety.

Adoption of the Correction

Accordingly, pursuant to the authority delegated to me by the Administrator, the Federal Aviation Administration amends part 39 of the Federal Aviation Regulations (14 CFR part 39) as follows:

PART 39—AIRWORTHINESS DIRECTIVES

1. The authority citation for part 39 continues to read as follows:

Authority: 49 U.S.C. 106(g), 40113, 44701.

§ 39.13 [Amended]

2. Section 39.13 is amended by removing amendment 39–9768 (61 FR 50988, September 30, 1996), and by adding a new airworthiness directive (AD), amendment 39–9882, to read as follows:

97–01–11 Airbus Industrie: Amendment 39–9882. Docket 92–NM–225–AD. Supersedes AD 96–20–02, amendment 39–9768.

Applicability: Model A300 B2–1C, B2K–3C, B2–203, B4–2C, B4–103, and B4–203 series airplanes, on which Modification 2626 has not been installed; certificated in any category.

Compliance: Required as indicated, unless accomplished previously.

Note 1: This AD applies to each airplane identified in the preceding applicability provision, regardless of whether it has been modified, altered, or repaired in the area subject to the requirements of this AD. For airplanes that have been modified, altered, or repaired so that the performance of the requirements of this AD is affected, the owner/operator must request approval for an alternative method of compliance in accordance with paragraph (f) of this AD. The request should include an assessment of the effect of the modification, alteration, or repair on the unsafe condition addressed by this AD; and, if the unsafe condition has not been eliminated, the request should include specific proposed actions to address it.

Compliance: Required as indicated, unless accomplished previously.

To prevent fatigue cracking, which could result in reduced structural integrity of the airplane, accomplish the following:

(a) For Model A300 B2–1C, B2K–3C, B2–203, B4–2C, and B4–103 series airplanes: Perform a detailed visual inspection to detect cracking of the fuselage, frame 47 at hole ''I'', in accordance with Airbus All Operator Telex (AOT) 53–02, dated November 2, 1992, at the times specified in paragraphs (a)(1) or (a)(2), as applicable.

(1) For Model A300 B2–1C, B2K–3C, and B2–203 series airplanes: Perform the inspection prior to the accumulation of 15,000 total landings, or within 50 landings after November 4, 1996 (the effective date of AD 96–20–02, amendment 39–9768), whichever occurs later.

(2) For Model A300 B4–2C and B4–103 series airplanes: Perform the inspection prior to the accumulation of 18,700 total landings, or within 50 landings after November 4, 1996, whichever occurs later.

(b) For Model A300 B4–203 series airplanes: Prior to the accumulation of 14,100 total landings, or within 50 landings after the effective date of this AD, whichever occurs later, perform a detailed visual inspection to detect cracking of the fuselage, frame 47 at hole ''I'', in accordance with Airbus All Operator Telex (AOT) 53–02, dated November 2, 1992.

(c) If no crack is detected during the inspection required by paragraph (a) or (b) of this AD, repeat the detailed visual inspection at intervals not to exceed 200 landings.

(d) If a crack is detected during any inspection required by paragraph (a), (b), or (c) of this AD, prior to further flight, repair in accordance with either paragraph (d)(1), (d)(2), or (d)(3) of this AD:

(1) Repair in accordance with a method approved by the Manager, Standardization Branch, ANM–113, FAA, Transport Airplane Directorate; or

(2) Repair in accordance with crack repair procedures specified in Airbus A300 Service Bulletin 53–265, Revision 2, dated March 10, 1992; or

(3) Repair in accordance with crack repair procedures specified in Airbus Service Bulletin A300–53–299, dated December 14, 1993.

(e) Conducting a repetitive Rototest inspection of hole ''I'' in accordance with Airbus A300 Service Bulletin 53–265, Revision 2, dated March 10, 1992, or Airbus Service Bulletin A300–53–299, dated December 14, 1993, constitutes terminating action for the detailed visual inspections required by this AD. If any crack is found during a Rototest inspection, prior to further flight, repair it in accordance with that service bulletin.

(f) An alternative method of compliance or adjustment of the compliance time that provides an acceptable level of safety may be used if approved by the Manager, Standardization Branch, ANM–113, FAA, Transport Airplane Directorate. Operators shall submit their requests through an appropriate FAA Principal Maintenance Inspector, who may add comments and then send it to the Manager, Standardization Branch, ANM–113.

Note 2: Information concerning the existence of approved alternative methods of compliance with this AD, if any, may be obtained from the Standardization Branch, ANM–113.

(g) Special flight permits may be issued in accordance with sections 21.197 and 21.199 of the Federal Aviation Regulations (14 CFR 21.197 and 21.199) to operate the airplane to a location where the requirements of this AD can be accomplished.

(h) The visual inspection shall be done in accordance with Airbus All Operator Telex (AOT) 53–02, dated November 2, 1992. This incorporation by reference was approved previously by the Director of the Federal Register, in accordance with 5 U.S.C.

552(a) and 1 CFR part 51, as of November 4, 1996 (61 FR 50988, September 30, 1996). Copies may be obtained from Airbus Industrie, 1 Rond Point Maurice Bellonte, 31707 Blagnac Cedex, France. Copies may be inspected at the FAA, Transport Airplane Directorate, 1601 Lind Avenue, SW., Renton, Washington; or at the Office of the Federal Register, 800 North Capitol Street, NW., suite 700, Washington, DC.

(i) This amendment becomes effective on February 10, 1997.

Issued in Renton, Washington, on January 3, 1997.

S.R. Miller,

Acting Manager, Transport Airplane Directorate, Aircraft Certification Service.

[FR Doc. 97–536 Filed 1–9–97; 8:45 am]

BILLING CODE 4910–13–U

SECURITIES AND EXCHANGE COMMISSION

17 CFR Part 200

[Release No. 34–38111]

Delegation of Authority to Director of Division of Market Regulation

AGENCY: Securities and Exchange Commission.

ACTION: Final rule.

SUMMARY: The Commission is amending its rules to delegate authority to the Director of the Division of Market Regulation to provide exemptive relief

pursuant to the recently adopted Limit Order Display Rule (Rule 11Ac1–4(d)), and to delegate authority to delay the effective dates or compliance dates for any aspect of the implementation or operation of the Limit Order Display Rule or the recent amendments to the Quote Rule (Rule 11Ac1–1). This delegation will help to expedite and enhance the orderly implementation of the recently adopted Limited Order Display Rule and the amendments to the Quote Rule.

EFFECTIVE DATE: January 2, 1997.

FOR FURTHER INFORMATION CONTACT: Betsy Prout Lefler, Special Counsel, Division of Market Regulation, 202/942–0170.

SUPPLEMENTARY INFORMATION: On August 28, 1996, the Securities and Exchange Commission adopted amendments to the Quote Rule and a new Limit Order Display Rule.[1] The Limit Order Display Rule generally requires exchange specialists and OTC market makers to display customer limit orders that are at prices superior to the market maker's or specialist's own quote, subject to certain exceptions. The amendments to the Quote Rule, among other things, (1) require OTC market makers and exchange specialists to include in their public quotes any better prices that they have placed in certain electronic communications networks (''ECN Amendments''); (2) deems an OTC market maker or specialist in compliance with the ECN Amendment if it inputs such prices into an ECN that furnishes the best market maker and specialist prices therein to an exchange or association for inclusion in the public quotation system, and provides access to those prices equivalent to the access that would have been afforded market participants if the market maker or specialist had updated its own quote; and (3) expands the definition of ''OTC market maker'' to mean any dealer who holds itself out as being willing to buy from and sell to its customers, or otherwise, a security covered under the Quote Rule for its own account on a regular and continuous basis otherwise than on an exchange in amounts of less than block size.

Both the Limit Order Display Rule and the Quote Rule contain provisions that allow the Commission to grant exemptive relief from various provisions of the rules to market participants and self-regulatory organizations.[2] While the Director of the Division of Market Regulation already has delegated authority to grant exemptive relief under the Quote Rule, the present amendment to Rule 30–3[3] authorities the Director of the Division of Market Regulation to grant the exemptive the relief described in the Limit Order Display Rule. This delegation will provide flexibility to ensure orderly implementation of the recently adopted Limit Order Display Rule in instances where immediate action is necessary to ensure the protection of investors and the maintenance of fair and orderly markets. The present amendment to Rule 30–3 also authorizes the Director of the Division of Market Regulation to modify as needed the compliance dates and effective dates for operation of the Quote Rule, as amended, or of the Limit Order Display Rule.

The Commission finds, in accordance with Section 553(b)(3)(A) of the Administrative Procedure Act,[4] that this amendment relates solely to agency organization, procedures, or practice, and does not relate to a substantive rule. Accordingly, notice and opportunity for public comment are unnecessary, and publication of the amendment 30 days before its effective date is also unnecessary.

List of Subjects in 17 CFR Part 200

Administrative practice and procedure, Authority delegations (Government agencies).

Text of Amendment

For the reasons set out in the preamble, Title 17, Chapter II of the Code of Federal Regulations is amended as follows:

PART 200—ORGANIZATION; CONDUCT AND ETHICS; AND INFORMATION AND REQUESTS

1. The authority citation for Part 200 continues to read in part as follows:

Authority: 15 U.S.C. 77s, 78d–1, 78d–2, 78w, 78*11*(d), 79t, 77sss, 80a–37, 80b–11, unless otherwise noted.

* * * * *

2. Section 200.30–3 is amended by adding paragraphs (a)(61) and (a)(62) as follows:

§ 200.30–3 Delegation of authority to Director of Division of Market Regulations.

* * * * *

(a) * * *

(61) To grant exemptions from Rule 11Ac1–4 (''Rule'') (§ 240.11Ac1–4), pursuant to paragraph (d) of the rule.

(62) From January 2, 1997 through February 17, 1997, to modify for a period not to exceed 60 days, the effective date or the compliance date of Rule 11Ac1–1 (§ 240.11Ac1–1) or Rule 11Ac1–4 (§ 240.11Ac1–4), or amendments to Rule 11Ac1–1 or Rule 11Ac1–4, with respect to any party affected by such rules.

* * * * *

By the Commission.

Dated: January 2, 1997.

Margaret H. McFarland,

Deputy Secretary.

[FR Doc. 97–620 Filed 1–9–97; 8:45 am]

BILLING CODE 8010–01–M

[1] Securities Exchange Act Release No. 37619A (September 6, 1996), 61 FR 48290 (''Adopting Release'').

[2] 17 CFR 240.11Ac1–4(d); 17 CFR 240.11Ac1–1(d).

[3] 17 CFR 200.30–3.

[4] 5 U.S.C. 553(B)(3)(A).

---

17 CFR Part 240

[Release No. 34–38139; File No. S7–30–95

RIN 3235–AG66]

Order Execution Obligations

AGENCY: Securities and Exchange Commission.

ACTION: Final rule; Revised Effective Date; Revised Compliance Dates.

SUMMARY: The Securities and Exchange Commission is delaying the effective date and compliance dates for Rule 11Ac1–4 (''Limit Order Display Rule'') and amendments to Rule 11Ac1–1 (''ECN Amendment'') (cumulatively ''Order Execution Rules'').

DATES: *Effective Date:* The effective date shall be January 20, 1997 for § 240.11Ac1–4 and amendments to § 240.11Ac1–1, published on September 12, 1996 (61 FR 48290), and revised by rule published on January 9, 1997, except that the effective date for § 240.11Ac1–1(a)(25)(ii) remains April 10, 1997.

Compliance Dates: Each of the first three scheduled phase-in dates for compliance with the Order Execution Rules are being delayed one week, so that the first compliance date with respect to exchange-traded securities and 50 Nasdaq stocks shall be January 20, 1997, the phase-in date for an additional 100 Nasdaq securities shall be February 7, 1997, and the phase-in date for an additional 850 Nasdaq securities shall be February 28, 1997.

FOR FURTHER INFORMATION CONTACT: Betsy Prout Lefler, Special Counsel, Gail Marshall-Smith, Special Counsel, or David Oestreicher, Special Counsel, (202) 942–0158, Division of Market Regulation, Securities and Exchange Commission, 450 Fifth Street, N.W., Mail Stop 5–1, Washington, D.C. 20549.

SUPPLEMENTARY INFORMATION:

I. Background

On August 28, 1996, the Securities and Exchange Commission

(''Commission'') adopted Rule 11Ac1–4,[1] the ''Limit Order Display Rule,'' and amendments to Rule 11Ac1–1, the ''ECN Amendment,'' to require OTC market makers and exchange specialists to display certain customer limit orders, and to publicly disseminate the best prices that the OTC market maker or exchange specialist has placed in certain electronic communications networks (''ECNs''), or to comply indirectly with the ECN Amendment by using an ECN that furnishes the best market maker and specialist prices therein to the public quotation system.[2] In the Adopting Release, the Commission deemed the effective date of these initiatives January 10, 1997. Thereafter, the Commission modified the effective date of the rules to January 13, 1997, and established compliance dates with respect to the Limit Order Display Rule and the ECN Amendment so that compliance with the rules would be phased-in over several months.[3]

In order to allow market participants more time to adapt to the Order Execution Rules and the National Association of Securities Dealers' recently proposed amendments to its Small Order Execution System, SelectNet, and other rules to accommodate the Order Execution Rules, the Commission is hereby modifying the effective dates and compliance dates as follows: (1) the effective date for the Limit Order Display Rule and the amendments to the Quote Rule adopted August 28, 1996, shall be January 20, 1997. The effective date for the Quote Rule definition of ''subject security,'' § 240.11Ac1–1(a)(25)(ii), remains April 10, 1997; (2) each of the first three scheduled phase-in dates for compliance with the Order Execution Rules are being delayed one week, so that the first compliance date with respect to exchange-traded securities and 50 Nasdaq stocks shall be January 20, 1997, the phase-in date for an additional 100 Nasdaq securities shall be February 7, 1997, and the phase-in date for an additional 850 Nasdaq securities shall be February 28, 1997. The remaining compliance dates for the Limit Order Display Rule and the ECN Amendment remain unchanged.

For the Commission, by the Division of Market Regulation, pursuant to delegated authority, 17 CFR 200.30(a)(62).

Dated: January 8, 1997.

Margaret H. McFarland,

Deputy Secretary.

[FR Doc. 97–823 Filed 1–9–97; 8:45 am]

BILLING CODE 8010–01–M

[1] 17 CFR 240.11Ac1–4.

[3] The Commission also amended subsection (a)(25)(ii) of the Quote Rule, thereby expanding the coverage of the Quote Rule to all exchange-traded securities. Thereafter, the Commission determined that it was appropriate to make this aspect of the amendments effective April 10, 1997. *See* Securities Exchange Act Release No. 38110, *infra* note 3. The present order does not change that date and, therefore, the effective date of subsection (a)(25)(ii) of the Quote Rule remains April 10, 1997.

[3] *See* Securities Exchange Act Release Nos. 37972 (November 22, 1996), and 38110 (January 2, 1997).

DEPARTMENT OF THE TREASURY

Bureau of Alcohol, Tobacco and Firearms

27 CFR Part 55

[Notice No. 845; Re: Regulatory Flexibility Act (Public Law 96–354)]

RIN 1512–AB48

Explosive Materials in the Fireworks Industry

AGENCY: Bureau of Alcohol, Tobacco and Firearms (ATF), Department of the Treasury.

ACTION: General notice of regulatory review.

SUMMARY: Complying with the Regulatory Flexibility Act (Public Law 96–354), the Bureau of Alcohol, Tobacco and Firearms (ATF) is required to review the regulations in 27 CFR part 55, issued in T.D. ATF–293, effective March 7, 1990. This document requests comments from members of the explosives industry and other interested persons as to the effectiveness of the regulations issued in T.D. ATF–293.

DATES: Comments and/or responses should be received by April 10, 1997.

ADDRESSES: Send written comments to: Chief, Firearms and Explosives Operations Branch, Bureau of Alcohol, Tobacco and Firearms, P.O. Box 50204, Washington, DC 20091–0204, ATTN: Notice No. 845. Copies of written comments received in response to this general notice will be available for public inspection during normal business hours at: ATF Reference Library, Office of Public Affairs and Disclosure, Room 6300, 650 Massachusetts Avenue, NW., Washington, DC 20226.

FOR FURTHER INFORMATION CONTACT: Mark D. Waller, ATF Specialist, Firearms and Explosives Operations Branch, Bureau of Alcohol, Tobacco and Firearms, (202) 927–8310.

SUPPLEMENTARY INFORMATION:

Background

Due to the number and severity of explosions that have occurred on the premises of special fireworks plants, the Bureau of Alcohol, Tobacco and Firearms (ATF) issued T.D. ATF–293, 55 FR 3717, which amended certain regulations contained in 27 CFR part 55. The regulations were effective on March 7, 1990.

These amendments implemented storage and recordkeeping requirements for industry members engaged in the manufacturing, importing, dealing, or using of fireworks and implemented the provisions of Pub. L. No. 99–308, 100 Stat. 449 (1986) relating to black powder. Some of the major provisions of the amendments were: (1) Extending the high explosive definition to flash powder and bulk salutes for storage purposes, since these materials can be made to detonate by means of a blasting cap when unconfined; (2) limiting the amount of flash powder used in special fireworks that can be kept outside an approved magazine and in any one processing building during a day's assembling operations to no more than 10 pounds; (3) limiting the amount of other explosive materials that can be kept outside an approved magazine and in any processing building or area during a day's assembling operations to no more than 500 pounds; (4) requiring that processing buildings or areas holding no more than 10 pounds of flash powder or 500 pounds of other explosive materials used in special fireworks be located in accordance with the table of distances in 27 CFR 55.218; (5) established new minimum separation of distance tables applicable to fireworks plants, fireworks process buildings, and fireworks plant magazines; (6) amended the recordkeeping requirements to include information regarding quantity and description of special fireworks; and (7) eliminated the recordkeeping requirements for licensees and permittees selling or disposing of exempt quantities of black powder for sporting, recreational, or cultural purposes in antique firearms or antique devices.

The periodic review of regulations under 5 U.S.C. 610(b) requires agencies to consider the following factors: (1) the continued need for the rule; (2) the nature of complaints or comments received concerning the rule from the public; (3) the complexity of the rule; (4) the extent to which the rule overlaps, duplicates or conflicts with other Federal rules, and, to the extent feasible, with State and local governmental rules; and (5) the length of time since the rule has been evaluated or the degree to which technology, economic conditions, or other factors have changed in the area affected by the rule.

Continued Need for Rule

ATF continues to believe that these regulations help to avoid accidental explosions on the premises of special fireworks plants.

Nature of Complaints Received

ATF has received no complaints about the regulating from members of the fireworks industry, and believe the regulations should remain in place.

Complexity of the Rule

The requirements were determined to be the minimum necessary to improve the safe storage of special fireworks.

Conflicting, Duplicative or Overlapping Federal Rules

None of the requirements of the regulation conflict, duplicate, or overlap other Federal rules.

Changes in Area Affected by Rule

The Regulatory Flexibility Act requires an agency to review all affected rules within ten years of the publication of the final rule. This is the first such review of final rule, T.D. ATF–293, since the effective date of March 7, 1990. ATF is unaware of any changes in the fireworks industry having a significant impact on the effectiveness of these regulations.

Public Participation

One of ATF's primary missions is protection of the public. To successfully accomplish this goal, we are requesting comments on the following questions concerning the amended regulations stemming from T.D. ATF–293:

(1) Have any of the changes in the regulations issued in T.D. ATF–293 caused any unnecessary burdens on business activities or practices?

(2) How could the existing regulations be altered to assure the same security, protection, and traceability of explosive materials, while further reducing expenses to industry members?

(3) Are there any areas of the explosives regulations which need strengthening? Are there any areas of the amendments contained in T.D. ATF–293 that need more stringent regulation?

(4) Are there any areas contained in the regulations issued in T.D. ATF–293 that need to be relaxed, rethought, or rewritten?

(5) Have there been any changes in the industry which would necessitate changes in these regulations?

Written comments must be received within the 90-day comment period. ATF will not recognize any material as confidential. Any materials submitted may be disclosed to the public. Any material which the transmitter considers to be confidential or inappropriate for disclosure should not be included in the suggestion. The name of the person submitting the suggestion is not exempt from disclosure.

Drafting Information

The author of this document is Mark D. Waller, Firearms and Explosives Regulatory Division, Bureau of Alcohol, Tobacco and Firearms.

List of Subjects in 27 CFR Part 55

Administrative practice and procedure, Authority delegations, Customs duties and inspection, Explosives, Hazardous materials, Imports, Penalties, Reporting and recordkeeping requirements, Safety, Security measures, Seizures and forfeitures, Transportation, and Warehouses.

Signed: November 27, 1996.

John W. Magaw,

Director.

Approved: December 16, 1996.

John P. Simpson,

Deputy Assistant Secretary, Regulatory, Tariff and Trade Enforcement.

[FR Doc. 97–593 Filed 1–9–97; 8:45 am]

BILLING CODE 4810–31–U

ENVIRONMENTAL PROTECTION AGENCY

40 CFR Part 70

[MI001; FRL–5674–1]

Clean Air Act Final Interim Approval of the Operating Permits Program; Michigan

AGENCY: Environmental Protection Agency (EPA).

ACTION: Final interim approval.

SUMMARY: The EPA is promulgating interim approval of the operating permits program submitted by the State of Michigan for the purpose of complying with Federal requirements for an approvable State program to issue operating permits to all major stationary sources, and to certain other sources.

EFFECTIVE DATE: February 10, 1997.

ADDRESSES: Copies of the State's submittal and other supporting information used in developing the final interim approval are available for inspection during normal business hours at the following location: EPA Region 5, Air and Radiation Division (AR–18J), 77 West Jackson Boulevard, Chicago, Illinois 60604.

FOR FURTHER INFORMATION CONTACT: Beth Valenziano, Permits and Grants Section (AR–18J), EPA, 77 West Jackson Boulevard, Chicago, Illinois 60604, (312) 886–2703. E-mail address: valenziano.beth@epamail.epa.gov.

SUPPLEMENTARY INFORMATION:

I. Background and Purpose

Title V of the Clean Air Act Amendments of 1990 (title V), and the implementing regulations at 40 Code of Federal Regulations (CFR) part 70 require that States develop and submit operating permits programs to EPA by November 15, 1993, and that EPA act to approve or disapprove each program within 1 year after receiving the submittal. The EPA's program review occurs pursuant to section 502 of the Clean Air Act (Act) and the part 70 regulations, which together outline criteria for approval or disapproval. Where a program substantially, but not fully, meets the requirements of part 70, EPA may grant the program interim approval for a period of up to 2 years. If EPA has not fully approved a program by 2 years after the November 15, 1993 date, or by the expiration of the interim approval period, it must establish and implement a Federal program.

On June 24, 1996, EPA proposed interim approval of the operating permits program for the State of Michigan. See 61 FR 32391. The EPA received public comment from five organizations on the proposal and compiled a Technical Support Document (TSD) responding to the comments and briefly describing and clarifying aspects of the operating permits program. In this document EPA is taking final action to promulgate interim approval of the operating permits program for the State of Michigan.

II. Final Action and Implications

A. Analysis of State Submission and Response to Public Comments

The EPA received comments on a total of 12 topics from five organizations. The EPA's response to these comments as developed for the response to comments TSD is included in this section.

1. Indian Country

The EPA proposed that the interim approval of Michigan's operating permits program shall not extend to any sources of air pollution on Indian lands, including lands within the exterior boundaries of any Indian reservation in the State of Michigan. MDEQ commented that Michigan's part 70 authority should extend to some lands within the exterior boundaries of Indian reservations, and identifies a specific

source on an Indian reservation that the State believes is within its jurisdiction. MDEQ states that it intends to develop legal arguments to support its determination that lands within the exterior boundaries of reservations that have been sold for non-tribal uses are within the State's jurisdiction. MDEQ also states that it expects such sources to submit operating permit applications in accordance with the State regulations.

Because Michigan has not demonstrated the legal authority to regulate sources in Indian country, including sources on non-Indian owned fee lands within the exterior boundaries of Indian reservations, the final interim approval of Michigan's part 70 program does not extend to such sources. However, EPA will carefully consider any evaluation Michigan submits in the future regarding State authority over such sources. The EPA retains the authority to issue part 71 permits to all sources in Indian country until such time as EPA approves a part 70 program. Part 71 application submittal deadlines for Indian country are established in 40 CFR 71.4(b) and 40 CFR 71.5(a)(1), and will be no later than November 15, 1998. Any sources located in Indian country required to submit applications earlier than this date will be notified in accordance with the requirements of part 71. The EPA takes no position on the State seeking voluntary compliance with State permitting requirements in Indian country.

2. Delegation of State Program to Local Governments

The proposed interim approval of Michigan's part 70 program confirmed the State's authority to delegate the program to certain county governments, such as Wayne County. MDEQ asked EPA to clarify whether a delegation would require a part 70 program revision, and what the timing and content of any required program revision would be.

Title V of the Act and the part 70 regulations specify the elements of a State operating permits program. In addition to the criteria for the permits themselves, these elements address various program infrastructure and administration issues. Examples include the adequacy of the agency's legal authorities and staffing. Thus, the delegation of the program authorities to another agency would by its nature entail revision of the State's part 70 program.

40 CFR 70.4(i) requires that program revisions be approved by EPA before they become finally effective. However, EPA is developing a program revision process that will meet the requirements of 40 CFR 70.4(i) while also providing continuity as States modify and update their programs. Although the details of this process have yet to be established, this process will focus on ongoing cooperation between the State and EPA, with real-time evaluation of program revision efforts. The EPA will work with Michigan as this process is developed so that any program revision, including any delegation of the State program to a local agency, can take advantage of this approach.

The content of a revised part 70 program submittal to EPA would depend on the nature and scope of the actual delegation. The information provided to EPA should address the changes and additions that the delegation makes to the program that has already been approved by EPA. The State should review the program submittal requirements in 40 CFR 70.4 and determine what elements are necessary to address the delegation. For example, the submittal of State regulations would not be necessary if they are not revised; however, the adoption of any local regulations necessary for the delegation should be included in the submittal. Similarly, a revised legal opinion from the Attorney General would likely be needed to verify that the local agency has the authority to carry out its part 70 program responsibilities established by the delegation. The EPA will provide Michigan additional guidance as necessary to address the program revision requirements for any particular State delegation to a local agency.

3. Definition of Potential to Emit

As a condition of full approval, EPA proposed that Michigan must revise its definition of ''potential to emit'' to require that limits on potential to emit be federally enforceable. Two commenters noted that a recent court case (*Clean Air Implementation Project* v. *EPA*, no. 96–1224 (D.C. Cir. June 28, 1996)) vacated the federally enforceable requirement from the 40 CFR 70.2 definition of potential to emit. Both commenters stated that this issue should be removed from Michigan's list of interim approval issues. The EPA agrees with the commenters, and has removed this issue as a condition of full approval. The EPA intends to develop a rulemaking to address the enforceability requirements on potential to emit limits for the title V program, the New Source Review program, and the section 112 toxics program.

4. Research and Development (R&D) Activities

In the proposed interim approval of Michigan's part 70 program, EPA acknowledged the State's regulatory provision that allows R&D activities on the same contiguous site as manufacturing activities to be treated as a separate source for purposes of determining operating permit program applicability. Although EPA believes that R&D should be treated as having its own industrial grouping for purposes of determining major source status, EPA stated in the Michigan proposal that separate treatment will not exempt R&D facilities in all cases. This is because some R&D activities may be individually major, or because they may be a support facility that makes significant contributions to the product of a collocated major facility. One commenter noted the R&D discussions in the part 70 supplemental proposal preamble (60 FR 45556–45558), and asked EPA to clarify whether EPA maintains its position in the supplemental proposal regarding the applicability of the support facility test in the R&D context.

As discussed in the supplemental proposal preamble, EPA believes that R&D activities should not generally be considered support facilities to collocated industrial facilities, since the support provided is directed towards development of new processes or products and not to current production. However, if an activity does contribute to the ongoing product produced or service rendered at a facility in more than a de minimis manner, those activities should be considered part of the source for applicability purposes.

5. Exemptions From Major Source Determinations

The EPA proposed as a condition of full approval that Michigan must remove its exemptions of certain small activities from determining major source status. Two commenters objected to this interim approval issue. One commenter stated that there is no express regulatory requirement mandating that insignificant activities be considered in major source determinations under title V. The commenter also believes the inclusion of such activities is inconsistent with EPA's July 10, 1995 guidance memorandum entitled ''White Paper for Streamlined Development of Part 70 Permit Applications''.

Neither the applicability requirements in 40 CFR 70.3 nor the ''major source'' definition in 40 CFR 70.2 provide any exemptions for insignificant activities in determining major source status. The

concept of insignificant activities originates under 40 CFR 70.5(c), and only establishes reduced title V permit application requirements for activities defined as insignificant. 40 CFR 70.5(c) does not modify the title V applicability provisions, and specifically states that ''an application may not omit information needed to determine the applicability of, or to impose, any applicable requirement.'' In addition, the White Paper provides guidance on the permit application requirements for insignificant activities; it does not address major source applicability considerations.

One commenter expressed concern that counting insignificant activities in major source determinations would be very burdensome. The commenter was also concerned that the use of engineering judgement in determining emissions from insignificant activities does not provide sources sufficient certainty and protection from lawsuits. The EPA does not agree that the calculation of emissions from insignificant activities need be a burdensome and resource intensive task. As discussed in the proposed interim approval of Michigan's part 70 program, EPA expects that such emissions would only be examined in those cases where the insignificant activity emissions might impact whether the source is major. In addition, sources and permitting authorities have significant discretion in determining the rigor of analysis necessary for calculating insignificant activity emissions. Such analysis may not even need to be performed on a source by source basis, and could instead establish a general emission level for a particular insignificant activity that can be used for all sources. For example, a permitting authority could determine that sources may assume 1,000 pounds of emissions from a particular insignificant activity. With respect to the commenter's concerns about protection from lawsuits, EPA sees no distinction between the emissions calculations for significant activities and insignificant activities. For example, a source with a potential to emit that is just under a title V applicability threshold should do what is necessary to ensure that the source indeed is not subject to the operating permits program, as additional emissions from either significant or insignificant activities could make the source major.

Another commenter stated that Michigan's rule is consistent with the actual application of major source determinations made throughout the country, and commented that other States are not including insignificant activities in determining applicability. The commenter also stated that there is no EPA guidance for determining emissions from such activities. The EPA is unaware of any other approved part 70 program that has regulatory exclusions for insignificant activities in determining a source's potential to emit. If EPA determines that a State's part 70 program is not being administered in accordance with part 70, EPA has the authority under 40 CFR 70.10 to require the State to correct the deficiencies. In addition, EPA has the authority to pursue enforcement actions against sources for violations of the Act, including the requirement to obtain a title V permit. With respect to the lack of EPA guidance for determining insignificant activity emissions, EPA generally issues emissions factor guidance on a source category basis. The EPA will consider developing guidance for any particular insignificant activities of concern that are not addressed in current guidance.

6. Certification of Compliance

The EPA proposed a condition for full approval requiring Michigan to adopt statutory or regulatory authority that ensures permit applications include a certification of compliance and a statement of the methods used for determining compliance. MDEQ commented that it will work with EPA to resolve this issue during the interim approval period. The EPA also agrees to work with MDEQ to resolve this issue, and would like to clarify that this is a condition of full approval because it is not clear that the underlying State requirements legally obligate sources to include the compliance certification requirements in their permit applications.[1]

Another commenter commented that Michigan's program does require applications to include compliance certifications, and states that this issue should be deleted. The following analysis addresses the commenter's arguments.

40 CFR 70.5(c)(9)(i) and (iv) require permit applications to include a statement of compliance for all applicable requirements. This statement must be certified by a responsible official in accordance with 40 CFR 70.5(d). Although Michigan's statute and regulations require applications to include a certification by a responsible official, they do not require applications to include a certified statement of compliance for all applicable requirements.

40 CFR 70.5(c)(9)(ii) requires the compliance certification to include a statement of the methods used for determining compliance. Although section 324.5507(1)(f)(ix) of Michigan's Natural Resources and Environmental Protection Act (NREPA) requires applications to include proposed compliance method information, the State provision does not associate this compliance method information to compliance certification requirements. The compliance certification provisions must therefore include a statement of the methods used for determining compliance. Of course, this does not preclude Michigan from expanding the scope of its current application requirement to serve this purpose if the State provides a means by which a source can certify that it made its compliance determination using its proposed compliance determination method.

40 CFR 70.5(c)(9)(iii) requires applications to include a schedule for submission of compliance certifications at least annually or more frequently if specified by the underlying requirement or the permitting authority. The EPA agrees that section 324.5507(1)(d) of NREPA satisfies this requirement and is clarifying in the final condition of full approval that this provision is not an issue.

7. Definition of Emergency

The EPA proposed as a condition of full approval that Michigan revise its definition of emergency in section 324.5527(1) of NREPA to ensure that the State's definition is not broader than that provided by 40 CFR 70.6(g)(1). Two commenters disagreed with this condition of full approval. Both commenters stated that the Michigan definition is not broader, and only clarifies what could be considered ''sudden and reasonably unforeseeable events''. The EPA has reevaluated this issue and agrees with the commenters that the State definition of emergency meets the requirements of 40 CFR 70.6(g).

The additional language in the State definition of emergency includes the following as events that could be considered an emergency: ''war, strike, riot, catastrophe, or other condition as to which negligence on the part of the person was not the proximate cause''. These situations are eligible for the affirmative defense only if they meet all the provisions of 40 CFR 70.6(g). Specifically, such events must arise from sudden and reasonably unforeseeable events beyond the control

[1] Despite this regulatory deficiency, the State application forms do include the compliance certification requirements.

of the source; require immediate corrective action to restore normal operation; and not include noncompliance to the extent caused by improperly designed equipment, lack of preventative maintenance, careless or improper operation, or operator error. Further, the emergency defense only applies to exceedances of technology based emission limitations that are due to unavoidable increases in emissions attributable to the emergency. These provisions are important qualifications, because the specific State examples would not qualify as emergencies in all situations. For example, exceedances at a source due to increased production would not qualify as an emergency even if the increase is due to additional demand caused by a strike at another source. Similarly, an exceedance at the source involved in a strike may not qualify as an emergency if the strike was not reasonably unforeseeable, or if the exceedance was not an unavoidable increase attributable to the strike. The EPA believes that the additional Michigan events are properly qualified because the State definition includes all of the requirements of 40 CFR 70.6(g). Therefore, EPA is removing this issue as a condition of full approval.

8. Source Category Limited Interim Approval

In its program submittal, the State of Michigan requested source category limited (SCL) interim approval of its 4 year permit issuance schedule. In the proposed interim approval notice for Michigan, EPA acknowledged Michigan's 4 year schedule as part of the State's permit fee sufficiency demonstration. However, EPA could only propose in the alternative the State's request for SCL interim approval because Michigan's regulations currently require a 3 year permit issuance schedule. MDEQ requested that EPA clarify the State's obligations for submitting a program revision once the 4 year schedule is incorporated into the State's regulations.

The EPA proposed SCL interim approval in the alternative so that a program revision would have been unnecessary if Michigan had been able to finalize and submit its rule revisions prior to this final action on Michigan's part 70 program. Because the State has not yet submitted the regulatory revision that would change the State permit issuance schedule from 3 to 4 years, this final action on Michigan's part 70 program fully approves the 3 year schedule contained in the current State regulations.

Once Michigan finalizes its 4 year issuance schedule, the State will be obligated to submit a part 70 program revision to EPA for SCL interim approval. Although 40 CFR 70.4(i) requires that program revisions be approved by EPA before they become finally effective, EPA expects that it will be able to quickly process Michigan's request for SCL interim approval. If the final 4 year schedule is identical to the draft rule that EPA proposed for SCL interim approval, EPA will be able to finalize SCL interim approval without having to repropose the action. If there are changes to the schedule, EPA would still be able to expedite the SCL interim approval through a direct final action. As discussed above in section II.A.2., EPA is also developing a program revision process that may help expedite the program revision process for this situation.

9. Startup, Shutdown, and Malfunction (SSM) Provisions

The EPA proposed as a condition of full approval that Michigan revise its SSM provisions to be consistent with the emergency defense provisions in 40 CFR 70.6(g), or adopt an enforcement discretion approach consistent with the Act. Two commenters expressed concern with this interim approval issue. MDEQ disagreed that the SSM rules affect the State's ability to enforce the requirements of title V, but agreed to work with EPA to address the issue during the interim approval period. The EPA believes it is important that MDEQ and EPA work together during the interim approval period, and commits to working with MDEQ to address this and other interim approval issues.

Another commenter stated that EPA's consideration of Michigan's SSM rules is too inflexible, as the SSM rules provide an affirmative defense only in narrowly defined and highly prescriptive circumstances. The commenter also believes that EPA overlooked the potential for environmental benefits resulting from the SSM requirements to use good air pollution control practices and implement preventative maintenance and malfunction abatement plans. Irrespective of the control and work practice provisions that Michigan's SSM rules require for sources to be eligible for the affirmative defense, EPA has no authority under its part 70 rules to approve an affirmative defense that is less stringent than that contained in 40 CFR 70.6(g). The commenter extolled the benefits of the safeguards contained in Michigan's SSM rules, but did not offer anything to counter EPA's finding that these rules are broader than 40 CFR 70.6(g) and are therefore inconsistent with the federal rule. As discussed in the Michigan proposal, however, EPA could also consider an enforcement discretion approach as a means for resolving this interim approval issue. Such an approach would allow Michigan to retain the specific SSM provisions that may provide environmental benefit.

The EPA would also like to clarify that the Michigan SSM regulations do not affect EPA's enforcement capabilities under the Act during the two year interim approval period. The EPA reserves the right to pursue enforcement of applicable requirements, in accordance with EPA's enforcement discretion policy, notwithstanding the existence of the State's SSM regulations. Similarly, the Michigan rules do not affect citizen suit rights under section 304 of the Act. The interim approval of Michigan's part 70 program establishes the mechanism for the State to issue federally enforceable part 70 permits; EPA will continue to implement the operating permits program in accordance with Title V of the Act and the implementing Federal regulations.

10. Environmental Audit Privilege and Immunity Law

The EPA proposed several conditions for full approval based on the enforcement deficiencies created by Michigan's Environmental Audit Privilege and Immunity Law (audit law), part 148 of NREPA. Four commenters disagreed with EPA's position that Michigan's audit law adversely affects Michigan's ability to comply with the enforcement requirements of part 70.[2]

MDEQ generally commented that Michigan's law does not affect the State's ability to enforce the requirements of title V. The Michigan State Senator sponsoring the bill that became Michigan's audit law also commented that the law does not adversely affect Michigan's authority to assure compliance with and enforce permits. Both commenters stated that regulated entities remain fully liable for any damages they cause, and self reporting data, agency inspections, and other information required by law is not privileged and remains available to the State and the public. However, both commenters supported the interim approval of Michigan's part 70 program, as it will allow the program to be implemented while EPA and MDEQ resolve these issues during the interim approval period.

For the reasons outlined in the Michigan proposal and as further discussed below, EPA remains

[2] One commenter also submitted comments on a fifth commenter's behalf.

concerned that Michigan's audit law affects the State's ability to meet the enforcement requirements of part 70. The EPA recognizes that Michigan may have a different interpretation of the provisions in the audit law, and has provided as an alternative condition for full approval that the State need only submit a revised title V Attorney General's opinion that addresses EPA's concerns and certifies that Michigan's operating permits program meets the part 70 requirements in light of the audit law. The EPA believes that a new Attorney General's opinion would be appropriate, as the Attorney General's opinion in the original program submittal to EPA was developed prior to the passage of the State audit law. The EPA appreciates Michigan's willingness to work with EPA during the interim approval period to resolve these issues.

The EPA also received extensive adverse comments from two law firms that represent nationwide trade organizations and industries. The following subsections address the issues raised by these commenters.[3]

a. Effect of the Michigan audit law on Michigan's enforcement authority.

The commenters stated that nothing in the Act or part 70 prohibits a State from establishing a new protection for audits, expanding existing privileges, providing an additional affirmative defense, or determining that criminal or civil prosecution is inappropriate in certain defined situations, such as those specified in the Michigan audit law.

The EPA disagrees. Section 502(b)(5)(E) of the Act lays out the minimum enforcement authorities which Congress required a State to have in order to secure Federal approval to implement and enforce a title V operating permits program. That section requires, as a condition of Federal approval, that a State have adequate authority to issue permits and assure compliance; to terminate or revoke such permits for cause; and to enforce permits, permit fee requirements and the requirement to obtain a permit, including authority to recover civil penalties in a maximum amount of not less than $10,000 per day for each violation and to provide appropriate criminal penalties. The part 70 implementing regulations, at 40 CFR 70.11, elaborate upon those authorities. Part 70 requires a State to have authority to issue emergency orders and seek injunctive relief (40 CFR 70.11(a) (1) and (2)), to assess civil and criminal penalties in a maximum amount of not less than $10,000 per day per violation (40 CFR 70.11(a)(3)), and to assess appropriate penalties (40 CFR 70.11(c)). Although neither title V nor part 70 expressly prohibits State audit privilege and/or immunity laws, the analysis in the proposed interim approval of Michigan's program shows how EPA believes the Michigan audit law interferes with Michigan's general enforcement authority and its civil penalty authority as required in title V and the part 70 implementing regulations so as to preclude full approval of Michigan's operating permits program.[4] For example, as EPA explained in the Michigan proposal, the immunity provisions of the Michigan audit law alter and in fact eliminate the State's authority to recover *any* civil penalties under the circumstances identified in the State law. *See* 61 FR 32394–32395. Moreover, the privilege provisions of the Michigan audit law prevent the State from obtaining potentially important information on whether a civil or criminal violation occurred or has been corrected. If the State, by virtue of such laws, surrenders its ability to thoroughly investigate potential violations or its discretion to assess appropriate penalties in the face of violations, then the State's fundamental enforcement authority is significantly compromised. The EPA believes that this is the case with the Michigan audit law.

In a similar vein, the commenters argue that the State of Michigan has the general authorities enumerated in section 502(b)(5)(E) and 40 CFR 70.11 to enforce permits, permit fee requirements and the requirement to obtain a permit and to recover civil and criminal penalties in a maximum amount of not less than $10,000 per day of violation, and that nothing in the text of section 502(b)(5)(E) of the Act or the part 70 regulations authorizes EPA to consider the effect of State laws of general applicability on a State's title V civil and criminal enforcement authorities. The commenters further argue that the logical corollary of EPA's proposed action with respect to the Michigan audit law is that *every* State procedural and evidentiary rule must be evaluated and amended whenever EPA believes that it could in some fashion, directly or indirectly, interfere with environmental enforcement.

Laws of general applicability are an appropriate subject for EPA review as is evident from the language of the part 70 regulations themselves. The regulations require that a State applying for a title V operating permits program include copies of ''all applicable State or local statutes and regulations including those governing State administrative procedures that either authorize the part 70 program *or restrict its implementation*.'' 40 CFR 70.4(b)(2) (emphasis added). The regulations also require a legal opinion from the State Attorney General asserting that the laws of the State provide adequate authority to carry out ''all aspects of the program.'' 40 CFR 70.4(b)(3). It is certainly EPA's expectation that, in issuing such a legal opinion, the Attorney General is certifying that no State laws, even laws of general applicability or laws of evidence, interfere with the State's authority to administer and enforce the title V program. *See* 59 FR 47105, 47108 (September 14, 1994) (requiring Oregon to revise or clarify meaning of criminal statute appearing to limit criminal liability of corporations as a condition of full title V approval); 59 FR 61820, 61825 (December 2, 1994) (accepting Oregon Attorney General's opinion regarding effect of statute).[5]

Both commenters also argued that the Michigan audit law does not interfere with the enforcement requirements of title V because it is qualified in a number of important respects. The commenters note that the Michigan audit law does not offer protection from disclosure for information obtained by observation, sampling, or monitoring by any regulatory agency; machinery and equipment maintenance records; information legally obtained independent of the environmental audit; and information required by law to be collected, developed, reported or otherwise made available to a government agency. *See* section

[3] These commenters also commented on various EPA documents, including the memorandum entitled ''Effect of Audit Immunity/Privilege Laws on States' Ability to Enforce Title V Requirements'', April 5, 1996, and the policy entitled ''Incentives for Self-Policing: Discovery, Disclosure, Correction and Prevention of Violations'', December 22, 1995. These comments are addressed to the extent that they are relevant to EPA's action on Michigan's title V operating permits program.

[4] In addition, part 70 does not provide for any affirmative defenses beyond that provided by the emergency defense provisions in 40 CFR 70.6(g). See subpart II.A.9. of this notice regarding Michigan's affirmative defense for startups, shutdowns, and malfunctions.

[5] One commenter argues that section 116 of the Act bars EPA from seeking to preempt State audit privilege and/or immunity laws. Section 116 states that, subject to limited exceptions, nothing in the Act shall preclude or deny the right of any State to adopt or enforce emissions standards or limitations or requirements respecting the control or abatement of air pollution ''except where such emission standard or limitation is less stringent than required by the Clean Air Act.'' Such an interpretation would mean that EPA had no authority to disapprove any State enforcement provisions as a condition of title V approval. Section 502(b)(5)(E), which requires EPA to promulgate minimum enforcement authorities required for approval of a State title V program, clearly belies such an argument.

14802(3), part 148 of NREPA. The commenters state that the privilege is further limited because it only applies to an environmental audit report as defined in the Michigan audit law. In addition, the commenters state that the immunity provisions in the Michigan audit law are limited by the provisions in section 14809 of NREPA, which, among other things, require the source to promptly disclose violations, make a good faith effort to achieve compliance, pursue compliance with due diligence, and promptly correct the noncompliance.

The EPA noted in the proposed interim approval of Michigan's program that, although the Michigan audit law appears to contain several exemptions from the otherwise broad scope of the privilege protection, EPA is unable to determine the extent to which the exemptions limit the application of the privilege. In other words, the extent to which evidence of violations of title V permits and permit program requirements would be exempted from the privilege provisions of the Michigan audit law is not clear. For example, the Michigan audit law appears to provide privilege protection for a source that determines through an environmental audit that it is operating without a title V permit. This violation appears eligible for the privilege because part 70 does not have any source notification requirements prior to the submittal of the permit application that would exclude this violation from the privilege provisions. The EPA does not agree with the commenters' assertion that the privilege is further limited by the definition of an environmental audit report. The Michigan audit law broadly defines such a report to include any documents created as a result of an environmental audit, such as supporting information and implementation plans that address correcting violations and improving current compliance. In addition, the Michigan audit law's exemptions from privilege protection do not appear to apply to the penalty immunity in section 14809, part 148 of NREPA. Therefore, it appears that any violation discovered during an environmental audit, regardless of whether it is eligible for the privilege, is eligible for the immunity as provided in section 14809. Despite the limitations on the scope of the State's immunity provisions imposed by the requirement that disclosure be ''voluntary'', EPA believes that application of the immunity provisions is so broad that it potentially could apply to any title V violation. Because the privilege and immunity exemptions could apply to title V requirements, EPA must therefore infer that there could be violations at a title V source discovered through an environmental audit that would be entitled to the privilege or immunity provided by the Michigan audit law. The EPA again notes that Michigan may have a different interpretation of its audit law, in which case an Attorney General's opinion may help to resolve these interim approval issues.

The commenters also take issue with EPA's interpretation of the title V and part 70 requirements for enforcement authority, as evidenced in the April 5, 1996 memorandum entitled ''Effect of Audit Immunity/Privilege Laws on States' Ability to Enforce Title V Requirements'' (hereinafter, the ''April 5 Title V Memorandum'') and the proposed interim approval of Michigan's part 70 program. The commenters argue that EPA's interpretation and application of the title V enforcement requirements improperly interferes with the States' role as independent sovereigns, improperly divests States of their primary responsibility for implementing and enforcing the Act, and conflicts with the Clinton Administration's stated policy to allow States to experiment with alternative approaches to achieve environmental protection. The commenters further argue that the determination of the Michigan legislature that criminal or civil penalties are inappropriate under the circumstances set forth in the Michigan audit law is within the statutory boundaries and flexibility provided by the Act. The commenters continue that the immunity provisions of the Michigan audit law reflect the Michigan legislature's judgment as to the ''appropriate'' penalty for companies that voluntarily disclose and correct instances of environmental noncompliance and reflect a reasonable allocation of the State's enforcement resources.

The EPA agrees that, in enacting the Act, Congress believed that States and local governments should have the primary responsibility for controlling air pollution at its source. *See* Section 101(a)(3) of the Act. The EPA also agrees with the commenters that the States are to be given broad flexibility to select alternative means to achieve the minimum Federal requirements established in the Act by Congress and by EPA in the part 70 regulations, and fully supports State experimentation to achieve greater compliance with environmental laws. Such flexibility and experimentation, however, must be, as the commenters acknowledge, *within* the bounds of the statutes enacted by Congress and the implementing regulations promulgated by EPA. It cannot cancel out the requirement that States must meet some minimum Federal requirements as a condition of Federal approval of their programs.

In the case of the operating permits program, those minimum Federal requirements are set forth in title V and the part 70 regulations. It is these requirements that EPA is insisting that the State of Michigan meet as a condition of full approval of its title V program. In short, EPA does not believe that the Michigan title V program is within the statutory boundaries established by Congress or the flexibility provided by the Act because the Michigan audit law would limit the enforcement authority Congress and EPA required States to have as a condition of Federal approval.

Moreover, the commenters' argument that the Michigan audit law governs areas of law traditionally committed to States in their role as independent sovereigns—if taken to its logical conclusion—would mean that a State could not be required to have any civil or criminal penalty authority to get approval for a title V program. It is an argument that goes to the validity of section 502(b)(5)(E) and 40 CFR 70.11 themselves and therefore is untimely in this context. As stated above, Congress through title V, and EPA through the part 70 implementing regulations, required States to satisfy certain minimum requirements for enforcement authority as a condition of Federal approval of a Clean Air Act operating permits program. By conditioning full approval of the Michigan title V program on changes to the Michigan audit law or a demonstration by the State satisfactory to EPA that the Michigan audit law does not interfere with the enforcement requirements of title V, EPA is simply seeking to assure that Michigan has the required enforcement authorities before receiving Federal approval of its program. *Cf. Commonwealth of Virginia* v. *Browner,* 80 F.3d 869, 880 (4th Cir. 1996) (in rejecting Virginia's argument that requiring the State to change its judicial standing rules as a condition of title V approval violated State's sovereignty, the Court stated: ''Even assuming *arguendo* the accuracy of Virginia's assertion that its standing rules are within the core of its sovereignty, we find no constitutional violation because federal law 'may, indeed, be designed to induce state action in areas that would otherwise be beyond Congress' regulatory authority.''' *citing FERC* v. *Mississippi,* 456 U.S. 742, 766 (1982)).

The commenters also assert that EPA's use of its title V program approval authority to ''force'' States to modify their audit privilege and/or immunity legislation is contrary to Congress' general expression of intent against the automatic use of audit reports for enforcement of the Act, as expressed in the Joint Explanatory Statement of the Conference Committee Report for the 1990 Amendments. S. Conf. Rep. 101–952, 101st Cong. 2d Sess. 335, 348 (Oct. 26, 1990), *reprinted in* Legislative History at 941–42, 955, 1798. The commenters further assert that Michigan's decision to provide qualified audit immunity is consistent with that Congressional intent.

As an initial matter, EPA disagrees that it is using the title V approval process to ''force'' States to modify their audit legislation. Instead, as stated above, EPA is simply analyzing to what extent the audit privilege and/or immunity laws of a particular State compromise the enforcement authorities required by Congress in title V and interpreted by EPA through the part 70 regulations, as a condition of Federal approval of the State's operating permits program.

With respect to the issue of Congress' intent, the language from the Conference Report cited by the commenters does not clearly express a desire that audit reports not be used for enforcement of the Act requirements. Rather, the text expresses some general support for the concept of auditing and a desire that the *criminal penalties* of section 113(c) ''should not be applied in a situation where a person, acting in good faith, promptly reports the results of an audit and promptly acts to correct any deviation. Knowledge gained by an individual solely in conducting an audit or while attempting to correct deficiencies identified in an audit or the audit report should not *ordinarily* form the basis for intent which results in criminal penalties.'' (emphasis added). The legislative history merely indicates that the circumstances involving violations discovered through an audit report and voluntarily disclosed by the company will generally not meet the requirements for criminal liability. Importantly, Congress did not in any way suggest that a company which self-disclosed violations discovered through an environmental audit should be immune from civil penalties. In any case, when Congress amended the Act in 1990, there were no audit privilege and/or immunity laws on the books in any State. Any legislative history on auditing and enforcement from that period must be read in light of that reality. EPA does not believe Congress intended that the growth of environmental auditing—in itself a laudable goal fully supported by EPA—comes at the expense of the enforcement of environmental laws.[6] If Congress had wished to give special status to self-disclosed violations detected during an environmental compliance audit or to prohibit the use for general enforcement purposes of audits conducted under the Act and EPA approved programs, Congress could have done so in the language of the 1990 amendments. If anything, the legislative history of the Act is evidence of Congress' intent that such incentives for audits should be a basis for the exercise of prosecutorial discretion, and not a legislative grant of immunity or protection from disclosure.

The commenters also argue that Congress intended to vest the States with discretion in enforcing title V permit requirements and that the part 70 regulations merely provide that penalties assessed under a title V program must be ''appropriate'' to the violation. Nothing requires a State to obtain a penalty for every violation or prohibits a State from rewarding good actors who identify, disclose and correct violations, the commenters continue.

The EPA agrees that a State is not required to collect a penalty for every violation or is precluded from using its discretion to reward companies that conduct environmental audits and disclose and correct any violations discovered through such an audit. The EPA disagrees, however, that the only inquiry for title V approval is whether a State has authority to assess ''appropriate'' penalties. The part 70 regulations first state that civil and criminal fines must be recoverable ''in a maximum amount of *not less than $10,000 per day per violation*.'' 40 CFR 70.11(a)(3)(i)–(iii) (emphasis added).[7] Section 70.11(c) then provides that ''[a] civil penalty or criminal fine assessed, sought, or agreed upon by the permitting authority under paragraph (a)(3) of this section shall be appropriate *to the violation*.'' (emphasis added). By interpreting title V and part 70 to require only that States have authority to assess ''appropriate'' penalties, the commenters are reading out of the regulations the independent requirement that States have the authority to assess civil and criminal penalties of an amount not less than $10,000 per day per violation. Read together, 40 CFR 70.11(a)(3) and 70.11(c) require that a State have authority to assess a civil or criminal penalty of up to $10,000 per day per violation and that, in addition, the penalty assessed in any particular case be ''appropriate'' to the violation at issue. Thus, EPA agrees with the commenters that it is within Michigan's discretion not to impose the statutory maximum penalty for violations as to which a lesser penalty is appropriate or to determine that criminal or civil prosecution is inappropriate under the facts and circumstances of a particular case so long as the State has the *authority* to assess penalties for each day of violation. The legislative history cited by the commenters in support of their position is, in fact, consistent with EPA's position on this issue. *See* Legislative History at 5815 (''states are not going to be required to impose these minimum fines of $10,000 for permit violations. Instead, the bill is revised to make clear that states shall ensure that they have the *authority* to impose this. It is not mandated, it is authority.'') (emphasis added).

Several commenters stated that section 113(e) of the Act only sets forth penalty factors that EPA or a Federal court must consider in imposing civil penalties for noncompliance with the Act, that section 113(e) has no bearing on EPA's authority to approve or disapprove State title V programs, and that nothing in section 113, title V or part 70 authorizes EPA to condition approval of a State's title V permit program on the State's ability to consider penalty factors comparable to those set out in section 113(e). The commenters further assert that, although section 113(e) is inapplicable, section 113(a) authorizes EPA in certain defined circumstances to take appropriate action, namely, filing an action against a facility where EPA believes the State's response was inadequate. This back-up

[6] That distinction is also reflected in EPA's Self-Disclosure policy, which offers significant incentives for businesses to audit and self-disclose violations, while at the same time retaining safeguards to ensure the protection of public health and the environment.

[7] One commenter appears to assert that a State need only have the authority to assess ''appropriate'' criminal penalties. In doing so, the commenter ignores the clear language of the part 70 regulations. Section 502(b)(5)(E) requires States to have authority to ''recover civil penalties in a maximum amount of not less than $10,000 per day for each violation, and provide appropriate criminal penalties.'' In promulgating part 70, EPA determined that to provide ''appropriate criminal penalties'' for purposes of title V approval, a State must have authority to issue criminal penalties in a maximum amount of not less than $10,000 per day per violation. *See* 40 CFR 70.11(a)(3)(ii) and (iii). If the commenter believes that the enforcement authorities enumerated in the part 70 regulations, including the requirement for criminal penalty authority of up to $10,000 per day per violation, are excessive or in any way inconsistent with the statutory authorities, the commenter should have challenged the part 70 regulations at the time of promulgation in 1992.

authority, and not wholesale invalidation of a State's title V permits program, the commenters continue, is EPA's tool for ensuring to its own satisfaction that State audit legislation does not allow egregious Act violations to go unsanctioned. In any event, one commenter asserts that the Michigan audit law does take into account a violator's full compliance history in establishing the disclosure and immunity provisions.

The EPA agrees that the purpose of section 113(e) is, as the commenters assert, to set forth factors which EPA and the Federal courts must consider in assessing civil penalties under the Act. The EPA believes, however, that the section 113(e) factors can also serve as guidance in determining what civil penalty authority is minimally necessary in a State title V program.

In order for a State to have the authority to assess penalties that are ''appropriate'' to the violation in any particular case as required by 40 CFR 70.11(c), a State must have, in addition to the authority to assess a penalty of at least $10,000 per day per violation, the authority to consider mitigating or aggravating factors. In enacting section 113(e), Congress set forth factors it believed EPA and Federal judicial and administrative courts should consider in determining an appropriate penalty under the specific facts and circumstances before it. Although EPA believes that the factors enumerated by Congress in section 113(e) are the most fundamental, EPA believes that States may consider other factors as well. To the extent that a State has surrendered its ability to consider factors such as those set forth in section 113(e), EPA believes that a State does not have adequate authority, on a case-by-case basis, to collect penalties that are ''appropriate'' to the violation, as required by 40 CFR 70.11(c).

Industry commenters argue that since the section 113(e) factors do not apply to State programs, it must follow that Congress did not prescribe factors a State must apply in assessing ''appropriate'' penalties under title V, and that a State must therefore be given full approval as long as it possesses ''appropriate'' enforcement authority. As explained above, the question for EPA at the program approval stage is not how the State will exercise its enforcement discretion to assess penalties in any particular case. Rather, it is whether the State has sufficient authority to assess appropriate penalties in every case. Before granting full approval to a title V program, EPA must ensure, first, that the State has the general authority to assess penalties up to the amounts specified in section 70.11. The EPA must also ensure that the State has authority to consider factors, similar to those in section 113(e), such that the penalty actually assessed in any case may be appropriate to the violation. Because the immunity provisions of the Michigan audit law preclude the State from considering the factors set forth in section 113(e) or any other factors in determining an ''appropriate'' penalty in cases in which the source has disclosed and corrected violations discovered in an environmental audit, EPA believes that Michigan lacks this authority. The EPA also disagrees with the commenters' assertion that EPA's sole remedy where EPA believes a State does not have adequate enforcement authority is to take its own enforcement actions to address violations in that State. Although EPA does file Federal actions where the State fails to take enforcement action or where State action is inadequate to address a particular violation, before approving a State title V program EPA must also ensure that the State has demonstrated the capacity to administer and fully enforce the program as required by law and regulation. If Federal action were the only remedy for situations in which a State does not possess adequate enforcement authority, there would have been no need for Congress to direct EPA to promulgate rules setting forth minimum enforcement requirements for Federal approval of a State operating permits program. *See* 59 FR 61825 (rejecting similar comment in acting on Oregon's title V program).

Finally, regardless of one commenter's assertion that the Michigan audit law does take into account a violator's full compliance history in establishing the disclosure and immunity provisions, it is EPA's position that the Michigan audit law nonetheless prevents consideration of other critical factors in determining appropriate civil penalties, including but not limited to serious harm or risk of harm to the public or the environment, and substantial economic benefit to the violator. To the extent the Michigan audit law prevents consideration of mitigating or aggravating factors, EPA believes that Michigan has surrendered its authority to assess appropriate penalties as required by section 502(b)(5)(E) of the Act and 40 CFR 70.11.

The commenters stated that EPA's approach on State audit privilege and/or immunity laws is bad policy and not supported by empirical evidence. The commenters expressed strong support for environmental auditing as a means of obtaining compliance with increasingly complex environmental requirements. These commenters argue that EPA's reaction against such audit statutes is a ''knee-jerk'' reaction that ignores the potentially huge benefits that these laws offer. EPA has wrongly concluded, the commenters continue, that the existence of a limited and qualified affirmative defense to penalties for violations discovered through environmental audits and protection for information in audit reports weakens Michigan's authority to enforce the law or to ensure compliance, and that the evidence to date in other States with such laws shows in fact that audit privilege and/or immunity legislation encourages self-correction and increased compliance. At the same time, the commenters argue, EPA has not cited to any specific instance in which the Michigan audit law or some other State audit privilege and/or immunity law has compromised or inhibited enforcement of the Act or a title V permit program.

The EPA has expressed strong support for incentives which encourage responsible companies to audit to prevent noncompliance and to disclose and correct any violations that do occur. *See, e.g.,* EPA's Self-Disclosure Policy. The issue involved in this Federal Register action, however, is not whether environmental auditing is good or bad policy. Rather, the issue is whether the Michigan audit law, in offering privilege and immunity to companies conducting environmental audits, so deprives the State of its authority to take enforcement action for violations of title V requirements such that the State does not have the necessary authority required for full title V approval.

Moreover, EPA believes that it is premature at this point to expect significant empirical evidence to document whether environmental audit privilege and/or immunity laws enhance or impede environmental compliance. Most of the State audit statutes are little more than one year old and only a few States have issued permits under approved title V programs. In any event, EPA is aware of several on-going environmental enforcement actions in certain States with audit privilege and/or immunity laws in which the audit privilege appears to be interfering with prosecutors' efforts to obtain and utilize certain evidence.[8]

[8] The confidentiality prerequisites that attach to all on-going enforcement actions, however, prevent the Agency from revealing additional details at this time.

The commenters go on to argue that the reasoning set forth in the April 5 Title V Memorandum and the proposed interim approval of Michigan's program could have far-reaching and unintended effects on the relationship between EPA and States in the implementation of the Act and other environmental laws such as approvals of State Implementation Plans and State programs under the Clean Water Act and Resource Conservation and Recovery Act.

The EPA agrees that the rationale behind the April 5 Title V Memorandum and EPA's action on the Michigan title V program has implications for other Federal programs delegated to the States. Because of that, the Agency has for some months been analyzing the effects of State audit privilege and/or immunity laws on enforcement authorities under the Clean Water Act, the Resource Conservation and Recovery Act, and other statutes. The rationale behind the April 5 Title V Memorandum and EPA's action on the Michigan title V program as it relates to the Michigan audit law, however, is dictated not by political or policy considerations, but rather by statutes and regulations that were finalized after public notice and comment.

The commenters also stated that EPA's proposed interim approval of Michigan's program based on the Michigan audit law is inconsistent with existing EPA and Department of Justice (DOJ) enforcement policies, which reflect the appropriateness of limiting enforcement discretion. The commenters point to ''Factors in Decisions on Criminal Prosecutions for Environmental Violations in the Context of Significant Voluntary Compliance or Disclosure Efforts by the Violator,'' DOJ, July 1, 1991; ''The Exercise of Investigative Discretion'', EPA, January 12, 1994; ''Policy on Flexible State Enforcement Responses to Small Community Violations'' EPA, November 1995 (''EPA Policy on Small Communities''); ''Policy on Compliance Incentives for Small Businesses,'' EPA, May 1996; and EPA's Self-Disclosure Policy.

There is an important distinction between the policies cited by the commenters, which adopt an ''enforcement discretion'' approach, and the Michigan audit law.[9] The EPA and DOJ have announced policies guiding the exercise of their enforcement discretion under certain narrowly defined circumstances, while preserving the underlying statutory and regulatory authority.[10] State audit privilege and/or immunity laws, such as the Michigan audit law, by contrast, constrain enforcement discretion as a matter of law, impermissibly surrendering the underlying statutory and regulatory enforcement authorities required for Federal approval of the State programs.

Both commenters stated that EPA's proposed action on the Michigan program is inconsistent with several previous title V approvals where audit privilege and/or immunity legislation has not posed a bar to full approval. As examples of previous title V approvals which the commenters believe are inconsistent with EPA's proposed action on the Michigan program, as it relates to the Michigan audit law, the commenters cite to EPA's action on the Oregon, Kansas and Colorado title V programs. Relying on the recent Ninth Circuit decision in *Western States Petroleum Association* v. *EPA*, 87 F.3d 280 (9th Cir 1996) (''WSPA''), the commenters state that, where EPA is departing from a prior course of action, more is required of the Agency than conclusory statements concerning the potential impact of the Michigan audit law on the State's title V enforcement authority. Instead, the commenters argue that EPA must provide a basis for deviating from its earlier approaches in Oregon, Kansas and Colorado.

As an initial matter, EPA notes its action on Michigan's title V program is consistent with its action on the Texas title V program, 61 FR 32693, 32696–32699 (June 25, 1996) (final interim approval), and the Idaho title V program, 61 FR 64622–64635 (December 6, 1996) (final interim approval). Moreover, EPA has notified the States of Ohio, Arizona, and Florida that audit privilege and/or immunity laws that these States have enacted or are contemplating enacting could interfere with the enforcement requirements of title V and part 70.

With respect to the three programs cited by the commenters as inconsistent with EPA's proposed action on the Michigan program, EPA is still in the process of reviewing the audit privilege and/or immunity statutes in Oregon, Kansas and Colorado and their effects on the title V enforcement requirements in those States in order to determine whether EPA acted inconsistently in approving those programs. If EPA determines that it acted inconsistently, EPA intends to take appropriate action to follow the *WSPA* Court's mandate that EPA act consistently or explain any departures.

Finally, one commenter challenges the April 5 Title V Memorandum itself arguing that the guidance document imposes requirements on EPA approval of a State operating permits program in addition to those required by section 502(b)(5)(E) of the Act and the part 70 rules. Because the April 5 Title V Memorandum sets additional substantive and binding standards for approval of State title V operating permits programs not included in the part 70 regulations, the commenter continues, the guidance is a rule disguised as guidance and must be promulgated in accordance with the Administrative Procedures Act. This requires, among other things, public notice and comment.

The EPA disagrees. The April 5 Title V Memorandum does not, as the commenters assert, ''purport to change fundamentally the requirements in section 70.11 by adding provisions that (1) effectively prohibit a state from adopting an audit protection or immunity law and (2) impose at least four new penalty criteria.'' Rather, the guidance simply recounts and reiterates existing statutory and regulatory requirements for enforcement authority under the title V program and shows how audit privilege and/or immunity laws may prevent a State from meeting those requirements. It creates no new ''substantive and binding standards'' for approval of title V programs, and therefore is not subject to notice and comment rulemaking of the Administrative Procedures Act.[11]

[9] In addition, the criminal enforcement policies noted by the commenters are irrelevant, as Michigan's audit law does not create deficiencies in the State's part 70 criminal enforcement penalty authority.

[10] Although the EPA Policy on Small Communities does encourage States to provide small communities an incentive to request compliance assistance by waiving all or part of a penalty under certain circumstances, it does not provide an unqualified waiver of civil penalties. The policy directs States to assess a small community's good faith and compliance status before granting any relief from penalties and identifies a number of factors that a State should consider in determining whether relief from civil penalties is appropriate in the particular circumstances. In addition, EPA's Policy on Small Communities directs a State to consider the seriousness of the violation. *See* EPA's Policy on Small Community Violations, page 4. Although the policy does not direct the State to consider economic benefit in determining the appropriate enforcement response, the policy is available only to those small communities that are financially unable to satisfy all applicable environmental mandates without the State's compliance assistance.

[11] One commenter also stated that EPA expressly recognized in its earlier approval of the Oregon title V program that EPA would have to use rulemaking to modify its part 70 rules before EPA could prohibit States from adopting audit privilege and/or immunity laws. The commenter misstates the Agency's position. As an initial matter, the Oregon audit statute, Oregon Revised Statute 468.963, contains only an audit privilege and does not contain an immunity provision. In proposing interim approval of the Oregon title V program, EPA

Continued

Moreover, in explaining why the Michigan audit law precludes full approval, EPA is relying on the requirements of title V and part 70 themselves, and not the April 5 Title V Memorandum. Finally, EPA's application of the title V and part 70 enforcement requirements to the specific circumstances before EPA in the case of the Michigan audit law is subject to notice and comment rulemaking.[12]

b. Additional concerns regarding the effect of the privilege provisions of the Michigan audit law on the State's enforcement authority. Both commenters disagreed with EPA's position that the Michigan audit law contains a privilege for environmental audit reports which impermissibly interferes with the enforcement requirements of title V and part 70. The commenters note that the Michigan audit law does not prohibit the State from gaining access to underlying data not prepared for or during the audit. One commenter states that EPA is directly linking title V enforcement authority to State evidentiary rules, and that every State procedural and evidentiary rule must therefore be evaluated and amended whenever it interferes with environmental enforcement. The commenters continue that EPA has singled out audit privilege laws while not taking issue with State attorney-client privilege provisions.

As discussed in the proposed interim approval of Michigan's part 70 program, EPA believes that the Michigan audit law prevents the State from requiring an owner or operator to produce an environmental audit report under the State's general information gathering authority. Although a source must voluntarily disclose the relevant portions of the audit report in order to obtain immunity from civil penalties, an owner or operator can hold as privileged audit reports containing information on violations in the hopes that the violations will not otherwise come to the attention of the State agency. Further, a source can rely on the privilege provisions to avoid disclosing criminal violations, as the Michigan audit law does not provide immunity for disclosed criminal violations (other than for negligent acts or omissions). Similarly, a facility could elect to disclose the fact of a violation under the immunity provisions, but not the related evidence of whether the violation was knowing or intentional. Although EPA agrees that the Michigan audit law does not preclude access to information that is not part of an environmental audit report, EPA remains concerned that the data that led the source to conduct the environmental audit may by itself be insufficient to demonstrate either compliance or noncompliance with an applicable requirement. Furthermore, there may not be any documented information or event which caused a source to conduct an environmental audit. In such a situation, all information regarding a potential violation would exist only in the environmental audit report. The EPA therefore believes that the Michigan audit law so interferes with the State's information gathering authority as to prevent the State from obtaining appropriate civil and criminal penalties and assuring compliance with the Act, as required by section 502(b)(5)(E) of the Act and 40 CFR 70.11.

As discussed previously in this notice, EPA agrees with the commenters that State procedural and evidentiary rules are an appropriate subject for EPA review, as provided by 40 CFR 70.4(b)(2) and 40 CFR 70.4(b)(3). However, EPA does not agree with the commenters that the attorney-client privilege and the privilege provisions in the Michigan audit law are analogous. The attorney-client privilege merely prevents an attorney from revealing information disclosed by a client in a confidential communication made for the purpose of obtaining legal advice. It does not preclude the enforcement authority from obtaining the information from the source by any legal means. On the other hand, the privilege created by the Michigan audit law completely prevents an enforcement authority from obtaining any information labeled as an environmental audit report.

One commenter also stated that adequate title V enforcement authority cannot depend on access to voluntarily prepared audit reports. If such were the case, the commenter reasoned, State regulators would necessarily lack adequate enforcement authority over those entities that do not conduct audits voluntarily.

The EPA agrees that access to voluntarily prepared audit reports is not *per se* a prerequisite for adequate enforcement authority for title V approval. However, such access is important if the report exists and it contains information on violations or whether violations have been promptly corrected. The lack of such access can adversely affect the adequacy of enforcement authority.

One commenter also stated that State audit protection legislation does not inhibit whistle blowers but instead merely prohibits unauthorized disclosure of an audit report because whistle blowers are free to disclose any ''non audit'' information to support their allegations without fear of violating the laws.

As an initial matter, EPA notes that this concern is irrelevant in EPA's action on Michigan's title V program. To EPA's knowledge, neither the Michigan audit law nor any other provision of Michigan law specifically restricts the information that a whistle blower may disclose to a State agency, and EPA therefore did not raise this as a concern in proposing action on Michigan's title V program.

The commenter appears to be responding to an issue discussed in the April 5 Title V Memorandum. In that memorandum, EPA expressed concern with State audit privilege and/or immunity statutes that impose special sanctions upon persons who disclose privileged information. *See* April 5 Title V Memorandum, pp. 5–6. Although irrelevant to action on Michigan's title V program, EPA believes, as stated in the guidance, that the Act provision

---

stated it was in the process of developing a national position regarding EPA approval of environmental programs in States which have environmental audit privileges, and that therefore, it proposed to take no action on the Oregon audit provision in the context of the Oregon title V approval. EPA noted, moreover, that it might consider such a privilege grounds for withdrawing program approval under 40 CFR 70.10(c) in the future if EPA later determined that the Oregon audit provision interfered with Oregon's enforcement responsibilities under title V and part 70. 59 FR 47105, 47106 (September 14, 1994). During the public comment period on EPA's proposal, one commenter stated that EPA's suggestion that a State audit privilege could be grounds for interim approval or withdrawal was bad policy and that Oregon's audit privilege statute was consistent with the Act. In addition to responding to the merits of the comment, EPA stated that the commenter's concerns were premature because, as the commenter acknowledged, EPA had not proposed to take any action on Oregon's environmental audit privilege statute in the context of final interim approval of the Oregon program. EPA further stated that any such concerns about EPA's position on the Oregon audit privilege statute would be properly made if EPA later proposed to withdraw Oregon's title V approval based on Oregon's audit privilege or if EPA ''revised part 70 to prohibit environmental audit provisions such as Oregon's.'' 59 61820, 61824 (December 2, 1994). EPA did *not* say in that Federal Register notice that a rulemaking would be required in order for the Agency to disapprove a title V program in a State with an environmental audit privilege and/or immunity statute.

[12] EPA also disagrees with one commenter's assertion that the Congressional review provisions of Subtitle E of the Small Business Regulatory Enforcement Fairness Act of 1996, P.L. 104–121 (SBREFA), requires EPA to submit the April 5 Title V Guidance Memorandum to Congress. EPA does not believe that April 5 Title V Memorandum is subject to Congressional review under SBREFA because it is not a rule and it does not substantially affect the rights or obligations of a nonagency party. Even if the Memorandum were subject to review, EPA has not relied on that Memorandum as a basis for this action. Therefore, any procedural defect with respect to the April 5 Title V Memorandum would be irrelevant to the legal sufficiency of this action.

which gives explicit protection to whistle blowers makes no distinctions with respect to the source of the information relied upon by the whistle blower. The EPA believes that it is inconsistent with section 322 of the Act for States to remove audit reports from the universe of information which employees may rely upon in reporting violations to local or State authorities.

c. Summary. The EPA continues to believe that the privilege and immunity provisions of the Michigan audit law impermissibly interfere with the enforcement authorities required for full title V approval. Accordingly, Michigan must narrow the applicability of the privilege provided in section 14802, part 148 of NREPA, and narrow the applicability of the immunity provided by section 14809, part 148 of NREPA, to ensure that the State title V program has the authority to: assure compliance with part 70 permits and the requirements of the operating permits program [40 CFR 70.4(b)(3)(i)]; enforce permits and the requirement to obtain a permit [40 CFR 70.4(b)(3)(vii)]; and meet the general enforcement authority requirements of 40 CFR 70.11(a) and (c), as addressed above. In addition, the State must submit a revised title V Attorney General's opinion that addresses EPA's concerns in subpart II.A.10. above and in subpart II.A.2.i. of the proposed interim approval of Michigan's program [61 FR 32391–32398], in which the Attorney General certifies that the revised part 148 does not affect Michigan's ability to meet the enforcement requirements of 40 CFR 70.4(b)(3)(i), 40 CFR 70.4(b)(3)(vii), 40 CFR 70.11(a), and 40 CFR 70.11(c).

Alternatively, the State may submit a revised title V Attorney General's opinion certifying that the current part 148 does not affect the enforcement requirements of 40 CFR 70.4(b)(3)(i), 40 CFR 70.4(b)(3)(vii), 40 CFR 70.11(a), and 40 CFR 70.11(c). Such an opinion must also specifically address why EPA's interim approval provision requiring revisions to the currently enacted law is not valid. Finally, Michigan must also submit a supplemental Attorney General's opinion certifying that all other title V authorities that may be affected by part 148 are met, including but not limited to: Michigan's authority to bring suit to restrain any person from engaging in any activity in violation of a permit that is presenting an imminent and substantial endangerment [40 CFR 70.11(a)(1)]; Michigan's authority to seek injunctive relief to enjoin any violation of any program requirement, including permit conditions [40 CFR 70.11(a)(2)]; Michigan's authority to recover criminal fines [40 CFR 70.11(a)(3)(ii) and (iii), and 40 CFR 70.11(c)]; and the requirement that the burden of proof for establishing civil and criminal violations is no greater than the burden of proof required under the Act [40 CFR 70.11(b)]. The supplemental Attorney General's opinion must specifically address these requirements in light of the provisions contained in the State's audit law. Although EPA does not believe that the Michigan audit law affects any title V requirements other than the ones specifically identified in this action, a supplemental Attorney General's opinion is appropriate because Michigan's current part 70 Attorney General's opinion was written before the existence of the Michigan audit law.

11. Additional State Comments

MDEQ noted that it is pursuing changes to Michigan's operating permit regulations to address the interim approval issues pertaining to the definition of ''schedule of compliance'', the definition of ''stationary source'', and the applicability requirements for nonmajor solid waste incineration units. The EPA has reviewed Michigan's proposed rules revision package, and submitted comments to MDEQ during the package's public comment period.

MDEQ also acknowledged the condition for full approval that requires removal of section 5534 of NREPA. MDEQ agrees to pursue an amendment to NREPA to remove section 5534.

B. Final Action

1. Interim Approval

The EPA is promulgating interim approval of the Michigan operating permits program received by EPA on May 16, 1995, July 20, 1995, October 6, 1995, November 7, 1995, and January 8, 1996. The scope of Michigan's part 70 program approved in this notice applies to all part 70 sources within Michigan, except for any sources of air pollution in Indian country. The State must make the following changes to receive full approval:

a. Revise the definition of ''schedule of compliance'' in R 336.1119(a) to provide that the schedule of compliance for sources that are not in compliance shall resemble and be at least as stringent as that contained in any judicial consent decree or administrative order to which the source is subject. This provision is required by 40 CFR 70.5(c)(8)(iii)(C).

b. Revise the definition of ''stationary source'' in R 336.1119(q) to provide that the definition includes all of the process and process equipment which are located at one or more *contiguous or* adjacent properties. The emphasized phrase is not currently included in the State regulation. This provision is required in the definition of ''major source'' in 40 CFR 70.2.

c. Revise R 336.1211(1) to provide that nonmajor solid waste incineration units required to obtain a permit pursuant to section 129(e) of the Act are subject to the title V permits program. The permitting deferral for nonmajor section 111 sources in 40 CFR 70.3(b) does not apply to solid waste incineration units required to obtain a permit pursuant to section 129(e) of the Act.

d. Revise R 336.1212(1) to delete the exemption of certain activities from determining major source status. Part 70 and other relevant Act programs do not provide for such exemptions from major source determinations. This interim approval issue does not apply to the State's use of R 336.1212(1) as an insignificant activities list pursuant to 40 CFR 70.5(c).

e. Revise the State statutes or regulations, as appropriate, to require that permit applications include a certification of compliance with all applicable requirements and a statement of the methods used for determining compliance, as specified in 40 CFR 70.5(c)(9) (i), (ii), and (iv).

f. Remove the provisions of section 324.5534 of NREPA, which provide for exemptions from penalties or fines for violations caused by an act of God, war, strike, riot, catastrophe, or other condition as to which negligence or willful misconduct was not the proximate cause. Title V does not provide for such broad penalty and fine exemptions.

g. Revise R 336.1913 and R 336.1914 to be consistent with the affirmative defense provisions in 40 CFR 70.6(g). Alternatively, adopt an enforcement discretion approach consistent with the Act. These State regulations provide an affirmative defense that is broader than that provided by 40 CFR 70.6(g). They are also inconsistent with agency enforcement discretion permissible under the Act. These regulations, therefore, affect the State's ability to enforce permits and assure compliance with all applicable requirements and the requirements of part 70 [40 CFR 70.4(b)(3)(i) and 70.4(b)(3)(vii)]. For the same reasons, they also affect the State's general enforcement authority under 40 CFR 70.11.

h. Address all of the following issues relating to the State's audit privilege and immunity law, part 148 of NREPA. These conditions are proposed interim approval issues to the extent that they affect the State's title V operating

permits program and the requirements of part 70.

i. Narrow the applicability of the privilege provided in section 14802, part 148 of NREPA, and narrow the applicability of the immunity provided by section 14809, part 148 of NREPA, to ensure that the State title V program has the authority to: assure compliance with part 70 permits and the requirements of the operating permits program [40 CFR 70.4(b)(3)(i)]; enforce permits and the requirement to obtain a permit [40 CFR 70.4(b)(3)(vii)]; and meet the general enforcement authority requirements of 40 CFR 70.11 (a) and (c) as addressed in subpart II.A.10. of this notice.

ii. Submit a revised title V Attorney General's opinion that addresses EPA's concerns in subpart II.A.10. above and in subpart II.A.2.i. of the proposed interim approval of Michigan's program [61 FR 32391–32398], and certifies that the revised part 148 does not affect Michigan's ability to meet the enforcement requirements of 40 CFR 70.4(b)(3)(i), 40 CFR 70.4(b)(3)(vii), 40 CFR 70.11(a), and 40 CFR 70.11(c).

iii. In lieu of subparts i. and ii. above, submit a revised title V Attorney General's opinion certifying that the current part 148 does not affect the enforcement requirements of 40 CFR 70.4(b)(3)(i), 40 CFR 70.4(b)(3)(vii), 40 CFR 70.11(a), and 40 CFR 70.11(c). The Attorney General's opinion must also specifically address why EPA's interim approval provision requiring revisions to the currently enacted law is not valid.

iv. Submit a supplemental Attorney General's opinion certifying that all other title V authorities that may be affected by part 148 are met, including but not limited to: Michigan's authority to bring suit to restrain any person from engaging in any activity in violation of a permit that is presenting an imminent and substantial endangerment [40 CFR 70.11(a)(1)]; Michigan's authority to seek injunctive relief to enjoin any violation of any program requirement, including permit conditions [40 CFR 70.11(a)(2)]; Michigan's authority to recover criminal fines [40 CFR 70.11(a)(3) (ii) and (iii), and 40 CFR 70.11(c)]; and the requirement that the burden of proof for establishing civil and criminal violations is no greater than the burden of proof required under the Act [40 CFR 70.11(b)]. The supplemental Attorney General's opinion must specifically address these requirements in light of the provisions contained in the State's privilege and immunity law.

This interim approval extends until February 10, 1999. During this interim approval period, Michigan is protected from sanctions for failure to have a program, and EPA is not obligated to promulgate, administer, and enforce a Federal operating permits program for the State. Permits issued under a program with interim approval have full standing with respect to part 70, and the 1-year time period for submittal of permit applications by subject sources begins upon the effective date of this interim approval, as does the 3-year time period for processing the initial permit applications.

If the State of Michigan fails to submit a complete corrective program for full approval by August 10, 1998, EPA will start an 18-month clock for mandatory sanctions. If the State of Michigan then fails to submit a corrective program that EPA finds complete before the expiration of that 18-month period, EPA will be required to apply one of the sanctions in section 179(b) of the Act, which will remain in effect until EPA determines that Michigan has corrected the deficiency by submitting a complete corrective program. Moreover, if the Administrator finds a lack of good faith on the part of the State of Michigan, both sanctions under section 179(b) will apply after the expiration of the 18-month period until the Administrator determines that Michigan has come into compliance. In any case, if, 6 months after application of the first sanction, Michigan still has not submitted a corrective program that EPA has found complete, a second sanction will be required.

If EPA disapproves the State of Michigan's complete corrective program, EPA will be required to apply one of the section 179(b) sanctions on the date 18 months after the effective date of the disapproval, unless prior to that date Michigan has submitted a revised program and EPA has determined that it corrected the deficiencies that prompted the disapproval. Moreover, if the Administrator finds a lack of good faith on the part of Michigan, both sanctions under section 179(b) shall apply after the expiration of the 18-month period until the Administrator determines that the State has come into compliance. In all cases, if, 6 months after EPA applies the first sanction, Michigan has not submitted a revised program that EPA has determined corrects the deficiencies, a second sanction is required.

In addition, discretionary sanctions may be applied where warranted any time after the expiration of an interim approval period if the State has not timely submitted a complete corrective program or EPA has disapproved its submitted corrective program. Moreover, if EPA has not granted full approval to Michigan's program by the expiration of this interim approval because that expiration occurs after November 15, 1995, EPA must promulgate, administer and enforce a Federal permits program for the State of Michigan upon expiration of interim approval.

2. Other Actions

Requirements for approval, specified in 40 CFR 70.4(b), encompass section 112(l)(5) requirements for approval of a program for delegation of section 112 standards as promulgated by EPA as they apply to part 70 sources. Section 112(l)(5) requires that the State's program contain adequate authorities, adequate resources for implementation, and an expeditious compliance schedule, which are also requirements under part 70. Therefore, EPA is promulgating approval under section 112(l)(5) and 40 CFR part 63.91 of the State's program for receiving delegation of section 112 standards that are unchanged from Federal standards as promulgated. This program for delegations only applies to sources covered by the part 70 program.

The EPA is also promulgating approval of Michigan's preconstruction permitting program found in Part 2 of Michigan's Air Pollution Control Rules (R 336.1201–336.1299) under the authority of title V and part 70 solely for the purpose of implementing section 112(g) to the extent necessary during the transition period between promulgation of the Federal section 112(g) rule and adoption of any necessary State rules to implement EPA's section 112(g) regulations. However, since the approval is for the single purpose of providing a mechanism to implement section 112(g) during the transition period, the approval itself will be without effect if EPA decides in the final section 112(g) rule that sources are not subject to the requirements of the rule until State regulations are adopted. Although section 112(l) generally provides authority for approval of State air programs to implement section 112(g), title V and section 112(g) provide authority for this limited approval because of the direct linkage between the implementation of section 112(g) and title V. The scope of this approval is narrowly limited to section 112(g) and does not confer or imply approval for purposes of any other provision under the Act, for example, section 110. The duration of this approval is limited to 18 months following promulgation by EPA of section 112(g) regulations, to provide Michigan adequate time for the State to

adopt regulations consistent with the Federal requirements.

III. Administrative Requirements

A. Official File

Copies of the State's submittal and other information relied upon for the final interim approval, including public comments on the proposal received and reviewed by EPA, are maintained in the official file at the EPA Regional Office. The file is an organized and complete record of all the information submitted to, or otherwise considered by, EPA in the development of this final interim approval. The official file is available for public inspection at the location listed under the **ADDRESSES** section of this document.

B. Executive Order 12866

The Office of Management and Budget has exempted this action from Executive Order 12866 review.

C. Regulatory Flexibility Act

The EPA's actions under section 502 of the Act do not create any new requirements, but simply address operating permits programs submitted to satisfy the requirements of 40 CFR part 70. Because this action does not impose any new requirements, it does not have a significant impact on a substantial number of small entities.

D. Unfunded Mandates Reform Act of 1995

Under section 202 of the Unfunded Mandates Reform Act of 1995, signed into law on March 22, 1995, EPA must prepare a budgetary impact statement to accompany any proposed or final rule that includes a Federal mandate that may result in estimated costs to State, local, or tribal governments in the aggregate, or to the private sector, of $100 million or more. Under section 205, EPA must select the most cost effective and least burdensome alternative that achieves the objectives of the rule and is consistent with statutory requirements. Section 203 requires EPA to establish a plan for informing and advising any small governments that may be significantly or uniquely impacted by the rule. EPA has determined that the final interim approval action promulgated today does not include a Federal mandate that may result in estimated costs of $100 million or more to State, local, or tribal governments in the aggregate, or to the private sector. This Federal action approves pre-existing requirements under State or local law, and imposes no new Federal requirements. Accordingly, no additional costs to State, local, or tribal governments, or to the private sector, result from this action.

Under 5 U.S.C. 801(a)(1)(A) as added by the Small Business Regulatory Enforcement Fairness Act of 1996, EPA submitted a report containing this rule and other required information to the U.S. Senate, the U.S. House of Representatives and the Comptroller General of the General Accounting Office prior to publication of the rule in today's Federal Register. This rule is not a ''major rule'' as defined by 5 U.S.C. 804(2).

List of Subjects in 40 CFR Part 70

Environmental protection, Administrative practice and procedure, Air pollution control, Intergovernmental relations, Operating permits, Reporting and recordkeeping requirements.

Dated: December 27, 1996.

Valdas V. Adamkus,

Regional Administrator.

Part 70, title 40 of the Code of Federal Regulations is amended as follows:

PART 70—[AMENDED]

1. The authority citation for part 70 continues to read as follows:

Authority: 42 U.S.C. 7401 et seq.

2. Appendix A to part 70 is amended by adding the entry for Michigan in alphabetical order to read as follows:

Appendix A to Part—70–Approval Status of State and Local Operating Permits Programs

* * * * *

Michigan

(a) Department of Environmental Quality: received on May 16, 1995, July 20, 1995, October 6, 1995, November 7, 1995, and January 8, 1996; interim approval effective on February 10, 1997; interim approval expires February 10, 1999.

(b) (Reserved)

* * * * *

[FR Doc. 97–643 Filed 1–9–97; 8:45 am]

BILLING CODE 6560–50–P

DEPARTMENT OF HEALTH AND HUMAN SERVICES

Administration for Children and Families

45 CFR Part 1311

RIN 0970–AB56

Head Start Program

AGENCY: Administration on Children, Youth and Families (ACYF), Administration for Children and Families (ACF), Health and Human Services (HHS).

ACTION: Final rule.

SUMMARY: The Administration on Children, Youth and Families is issuing this final rule to implement a new statutory provision authorizing the Secretary to create a Head Start Fellows Program for staff in local Head Start programs or other individuals working in the field of child development, child care, early childhood education, health, and family services.

EFFECTIVE DATE: February 10, 1997.

FOR FURTHER INFORMATION CONTACT: Dennis Gray, Head Start Bureau, Administration on Children, Youth and Families, P.O. Box 1182, Washington, D.C. 20013; (202) 205–8404.

SUPPLEMENTARY INFORMATION:

I. Program Purpose

Public Law 103–252, the Human Services Amendments of 1994, amended the Head Start Act to authorize the creation of a Head Start Fellows Program (HSFP), which will support professional development of individuals working in Head Start or related programs.

The Head Start Bureau is pleased with the opportunity to develop the HSFP. The Bureau anticipates that the HSFP will provide Head Start Fellows with a unique opportunity to be exposed to activities, issues, resources, and new approaches through placements that will include national and regional Head Start offices, academia, and other public or private nonprofit entities and organizations concerned with services to children and families. The Head Start Bureau will benefit from the valuable perspectives brought by the Fellows currently working in Head Start and other programs across America to the national policy making process.

II. Summary of the Final Rule

The authority for this final rule is section 1150 of Public Law 103–252, the Human Services Amendments of 1994 (the Act) which added section 648A(d) to the Head Start Act (42 U.S.C. 9843). Section 648A(d) authorizes the Secretary to establish a program of Head Start Fellowships. Section 648A(d)(6) authorizes the Secretary to make expenditures not to exceed $1,000,000 for any fiscal year for stipends and other reasonable expenses for the Fellows Program. Additional authority is found in section 648A(d)(8), which mandates that the Secretary promulgate regulations to carry out section 648A(d).

The Act specifies:

- To whom Fellowships may be competitively awarded;

- Placement locations for Head Start Fellows;
- The duration of Head Start Fellowships; and
- The status of Head Start Fellows.

III. Rulemaking History

On May 15, 1996, the Department published a Notice of Proposed Rulemaking (NPRM) in the Federal Register (61 FR 24467) proposing to establish a rule to implement the statutory provision establishing the Head Start Fellows Program, including selection, placement, duration and status of the Head Start Fellows. Interested persons were given 60 days in which to comment on the proposed rule. During the 60 day comment period the Department received comments from seven individuals in Head Start, child care, and early intervention programs.

IV. Section by Section Discussion of the Comments Received

No comments were received on sections 1311.1 (Head Start Fellows Purpose), 1311.2 (Definitions), and 1311.3 (Application Process).

Section 1311.4 Qualifications, Selection, and Placement

Comment: We received one comment that a specified number of Fellows slots should be reserved for people employed in Head Start at the local level. The individual also commented that non-Head Start program staff, especially early childhood specialists and consultants, should receive a lower priority rating in the selection process.

Response: It is anticipated that some local Head Start program staff will emerge as Fellows from each year's selection process. However, the purpose of the program is broader than Head Start and is aimed at a wider audience than the current Head Start community. The program's purpose is to build leadership and enhance the ability of the Fellows to make significant contributions throughout the early childhood and family services field. Establishing a quota for Head Start employees or otherwise placing eligible individuals from non-Head Start programs at a disadvantage would distort the nature of the competitive process and, we believe, is not in accordance with the intent of the legislation.

Comment: One comment suggested that the final rule should identify all organizations involved in the selection process and describe the role of each.

Response: This comment is in reference to the Council for Early Childhood Professional Recognition (''the Council''), a Washington, D.C.-based non-profit organization which is assisting with the implementation of the HSFP through a Cooperative Agreement between it and the Administration on Children, Youth and Families. The Council competed successfully for this Cooperative Agreement and is providing support for the development and operation of this program in myriad ways. Also involved is the Commission on National Head Start Fellowship, which is an entity which the Council and the Head Start Bureau jointly established and consists of nationally prominent individuals in early childhood and family services. The Commission is also providing substantial support in the ongoing development of the program, including the formulation and application of selection criteria and the actual recommendation of Fellows for selection.

Although we anticipate that these entities will remain involved throughout the currently legislated duration of the program, the HSFP is still in its developmental stage. It may become necessary at some point to change these relationships or establish entirely new relationships. For this reason it is our judgment that this should not be written into the regulation.

Comment: One comment to this section maintained that the selection criteria for choosing the Fellows should be published and weighted.

Response: There is merit to this argument in that the applicants would know with greater specificity the criteria on which they are being judged and the weight accorded each criterion and would therefore be able to respond more appropriately. Nevertheless, it is our judgment that specifying and precisely formulating the criteria and their relative weights would unduly restrict current Commissioners and future Commissioners in the selection process. However, we will be discussing this issue and the possibility of inclusion of criteria and their weights in the application package for future classes of Fellows at the next meeting of the Commission on National Head Start Fellowships.

Section 1311.5 Duration of Fellowships and Status of Head Start Fellows

Comment: We received one comment that, although the NPRM is clear, other information regarding the Fellowship is unclear as to whether the Fellowship placement is for one or for two years.

Response: We appreciate this comment and will assure that all documents to be used in the future regarding the Fellows Program specifically state that the Fellowship are for one year but may be renewed for a term of one additional year.

V. Impact Analysis

Executive Order 12866

This final rule implements the statutory authority to create a HSFP. Congress authorized expenditures allotted under section 640(a)(2)(D) of the Head Start Act, not to exceed $1 million in any fiscal year. This section allows for expenditures at the Secretary's discretion.

Regulatory Flexibility Act of 1980

The Secretary certifies that this rule will not have a significant impact on substantial numbers of small entities.

Paperwork Reduction Act

Under the Paperwork Reduction Act of 1995, Public Law 104–13, all Departments are required to submit to the Office of Management and Budget (OMB) for review and approval any reporting or record-keeping requirement inherent in a proposed rule or, if necessary, a final rule. This final rule contains an information collection requirement in section 1311.3 with regard to the application process for individuals applying for the HSFP. No comments were received on section 1311.3. The information collection remains the same as set forth in the NPRM.

We submitted section 1311.3 to OMB for review and approval in accordance with the Paperwork Reduction Act. The OMB control number is 0970–0140 and has been inserted at the end of section 1311.3. The expiration date is 7/31/99.

List of Subjects in 45 CFR Part 1311

Education of disadvantaged, Grant programs—social programs, Scholarships and fellowships.

(Catalog of Federal Domestic Assistance Program Number 93.600, Project Head Start)

Approved: December 17, 1996.

Olivia A. Golden,

Acting Assistant Secretary for Children and Families.

For the reasons set forth in the Preamble, 45 CFR Chapter XIII is amended by adding a new Part 1311 as follows:

PART 1311—HEAD START FELLOWS PROGRAM

Sec.

1311.1 Head Start Fellows Program purpose.
1311.2 Definitions.
1311.3 Application process.

1311.4 Qualifications, selection, and placement.
1311.5 Duration of Fellowships and status of Head Start Fellows.

Authority: 42 U.S.C. 9801 *et seq.*

§ 1311.1 Head Start Fellows Program Purpose.

(a) This part establishes regulations implementing section 648A(d) of the Head Start Act, as amended, 42 U.S.C. 9801 *et seq.*, applicable to the administration of the Head Start Fellows Program, including selection, placement, duration and status of the Head Start Fellows.

(b) As provided in section 648A(d) of the Act, the Head Start Fellows Program is designed to enhance the ability of Head Start Fellows to make significant contributions to Head Start and to other child development and family services programs.

§ 1311.2 Definitions.

As used in this part:

Act means the Head Start Act, as amended, 42 U.S.C. 9801 *et seq.*

Associate Commissioner means the Associate Commissioner of the Head Start Bureau in the Administration on Children, Youth and Families.

Head Start Fellows means individuals who participate in the Head Start Fellows Program, who may be staff in local Head Start programs or other individuals working in the field of child development and family services.

§ 1311.3 Application process.

An individual who wishes to obtain a Fellowship must submit an application to the Associate Commissioner. The Administration for Children and Families will publish an annual announcement of the availability and number of Fellowships in the Federal Register. Federal employees are not eligible to apply. (The information collection requirement contained in this section is approved under OMB Control Number 0970–0140.)

§ 1311.4 Qualifications, selection, and placement.

(a) The Act specifies that an applicant must be working on the date of application in a local Head Start program or otherwise working in the field of child development and family services. The qualifications of the applicants for Head Start Fellowship positions will be competitively reviewed. The Associate Commissioner will make the final selection of the Head Start Fellows.

(b) Head Start Fellows may be placed in:

(1) The Head Start national and regional offices;

(2) Local Head Start agencies and programs;

(3) Institutions of higher education;

(4) Public or private entities and organizations concerned with services to children and families; and

(5) Other appropriate settings.

(c) A Head Start Fellow who is not an employee of a local Head Start agency or program may only be placed in the national or regional offices within the Department of Health and Human Services that administer Head Start or local Head Start agencies.

(d) Head Start Fellows shall not be placed in any agency whose primary purpose, or one of whose major purposes is to influence Federal, State or local legislation.

§ 1311.5 Duration of Fellowships and status of Head Start Fellows.

(a) Head Start Fellowships will be for terms of one year, and may be renewed for a term of one additional year.

(b) For the purposes of compensation for injuries under chapter 81 of title 5, United States Code, Head Start Fellows shall be considered to be employees, or otherwise in the service or employment, of the Federal Government.

(c) Head Start Fellows assigned to the national or regional offices within the Department of Health and Human Services shall be considered employees in the Executive Branch of the Federal Government for the purposes of chapter 11 of title 18, United States Code, and for the purposes of any administrative standards of conduct applicable to the employees of the agency to which they are assigned.

[FR Doc. 97–576 Filed 1–9–97; 8:45 am]

BILLING CODE 4184–01–P

DEPARTMENT OF TRANSPORTATION

National Highway Traffic Safety Administration

49 CFR Part 571

[Docket No. 74–14; Notice 111]

RIN 2127–AG24

Federal Motor Vehicle Safety Standards; Occupant Crash Protection

AGENCY: National Highway Traffic Safety Administration (NHTSA), DOT.

ACTION: Final rule.

SUMMARY: In response to a petition from the Ford Motor Company, this document grants a four-month extension of the date by which vehicles with a gross vehicle weight rating (GVWR) of more than 8,500 pounds and less than 10,000 pounds must comply with the requirements for safety belt fit.

DATES: *Effective Date:* The amendments made in this rule are effective September 1, 1997.

Petition Date: Any petitions for reconsideration must be received by NHTSA no later than February 24, 1997.

ADDRESSES: Any petitions for reconsideration should refer to the docket and notice number of this notice and be submitted to: Administrator, National Highway Traffic Safety Administration, 400 Seventh Street, SW, Washington, DC 20590.

FOR FURTHER INFORMATION CONTACT: The following persons at the National Highway Traffic Safety Administration, 400 Seventh Street, SW, Washington, DC 20590:

For non-legal issues: Clarke Harper, Office of Crashworthiness Standards, NPS–11, telephone (202) 366–2264, facsimile (202) 366–4329, electronic mail ''charper@nhtsa.dot.gov''.

For legal issues: Edward Glancy, Office of the Chief Counsel, NCC–20, telephone (202) 366–2992, facsimile (202) 366–3820, electronic mail ''eglancy@nhtsa.dot.gov''.

SUPPLEMENTARY INFORMATION: On August 3, 1994, NHTSA published a final rule amending Standard No. 208, *Occupant Crash Protection,* to improve safety belt fit and thus the rate of belt use by requiring that Type 2 safety belts installed for adjustable seats in vehicles with a gross vehicle weight rating (GVWR) of 10,000 pounds or less either be integrated with the vehicle seat or be equipped with a means of adjustability to improve the fit and increase the comfort of the belt for a variety of different sized occupants (59 FR 39472). The final rule specified that the amendment take effect September 1, 1997.

On December 22, 1995, the Ford Motor Company (Ford) petitioned the agency to extend the effective date of this new requirement for vehicles with a GVWR between 8,500 and 10,000 pounds from September 1, 1997 to January 1, 1998. In its petition, Ford stated that unexpected developmental problems with a new truck platform prevented it from beginning production by September 1, 1997, as originally expected. Ford stated that redesigning the existing truck platform to meet the September 1, 1997 effective date would cost $4.5 million or $100 per vehicle. A more detailed explanation of Ford's basis for the extension was included in the notice of proposed rulemaking (NPRM) (61 FR 39432).

On July 29, 1996, NHTSA published an NPRM proposing to extend the

amendment's effective date to January 1, 1998 for vehicles with a GVWR between 8,500 and 10,000 pounds. In the NPRM, NHTSA noted that, due to the demographics of the occupants of the affected trucks, the benefits from applying the belt fit requirement to those trucks would be less than the benefits of applying it to lower GVWR vehicles. NHTSA also noted in the NPRM that the economic impact of requiring Ford to go ahead and comply with the September 1, 1997 effective date would be much greater than the costs anticipated by the agency for compliance with the belt fit requirement. In the NPRM, NHTSA tentatively decided that since the safety benefits for the affected trucks was likely to be very small, and the costs accentuated, a four-month extension of leadtime was reasonable. Interested persons are encouraged to read the July 29, 1996 NPRM for a detailed explanation of the agency's reasoning (61 FR 39432).

NHTSA received only one comment on the proposal to extend the compliance date for trucks with a GVWR of more than 8,500 pounds. In that comment, Ford supported the extension, citing the reasons included in its original petition and the NPRM. Accordingly, NHTSA has decided to adopt the proposed rule without change.

Rulemaking Analyses and Notices

Executive Order 12866 and DOT Regulatory Policies and Procedures

NHTSA has considered the impact of this rulemaking action under E.O. 12866 and the Department of Transportation's regulatory policies and procedures. This rulemaking document was not reviewed under E.O. 12866, ''Regulatory Planning and Review.'' This action has been determined to be not ''significant'' under the Department of Transportation's regulatory policies and procedures. As explained earlier, the agency estimates a cost savings of $4.8 to $4.9 million.

Regulatory Flexibility Act

NHTSA has also considered the impacts of this notice under the Regulatory Flexibility Act. I hereby certify that this final rule has no significant economic impact on a substantial number of small entities. As explained above, NHTSA does not anticipate a significant economic impact on any manufacturer from this proposal. For consumers, granting this extension will slightly reduce the cost of these trucks, especially the Ford trucks, compared to their cost if the extension is not granted.

Paperwork Reduction Act

In accordance with the Paperwork Reduction Act of 1980 (P.L. 96–511), there are no requirements for information collection associated with this final rule.

National Environmental Policy Act

NHTSA has also analyzed this final rule under the National Environmental Policy Act and determined that it will not have a significant impact on the human environment.

Executive Order 12612 (Federalism)

NHTSA has analyzed this proposal in accordance with the principles and criteria contained in E.O. 12612, and has determined that this final rule has no significant federalism implications to warrant the preparation of a Federalism Assessment.

Civil Justice Reform

This final rule will not have any retroactive effect. Under 49 U.S.C. 30103, whenever a Federal motor vehicle safety standard is in effect, a State may not adopt or maintain a safety standard applicable to the same aspect of performance which is not identical to the Federal standard, except to the extent that the state requirement imposes a higher level of performance and applies only to vehicles procured for the State's use. 49 U.S.C. 30161 sets forth a procedure for judicial review of final rules establishing, amending or revoking Federal motor vehicle safety standards. That section does not require submission of a petition for reconsideration or other administrative proceedings before parties may file suit in court.

List of Subjects in 49 CFR Part 571

Imports, Motor vehicle safety, Motor vehicles.

In consideration of the foregoing, 49 CFR Part 571 is amended as follows:

PART 571—FEDERAL MOTOR VEHICLE SAFETY STANDARDS

1. The authority citation for Part 571 of Title 49 continues to read as follows:

Authority: 49 U.S.C. 322, 30111, 30115, 30117, and 30166; delegation of authority at 49 CFR 1.50.

2. Section 571.208 is amended by revising S7.1.2 and adding a new S7.1.2.3 to read as follows:

§ 571.208 Standard No. 208; Occupant crash protection.

* * * * *

S7.1.2 Except as provided in S7.1.2.1, S7.1.2.2, and S7.1.2.3, for each Type 2 seat belt assembly which is required by Standard No. 208 (49 CFR 571.208), the upper anchorage, or the lower anchorage nearest the intersection of the torso belt and the lap belt, shall include a movable component which has a minimum of two adjustment positions. The distance between the geometric center of the movable component at the two extreme adjustment positions shall be not less than five centimeters, measured linearly. If the component required by this paragraph must be manually moved between adjustment positions, information shall be provided in the owner's manual to explain how to adjust the seat belt and warn that misadjustment could reduce the effectiveness of the safety belt in a crash.

* * * * *

S7.1.2.3 The requirements of S7.1.2 do not apply to any truck with a gross vehicle weight rating of more than 8,500 pounds manufactured before January 1, 1998.

* * * * *

Issued on December 16, 1996.

Ricardo Martinez,

Administrator.

[FR Doc. 97–388 Filed 1–9–97; 8:45 am]

BILLING CODE 4910–59–P

DEPARTMENT OF COMMERCE

National Oceanic and Atmospheric Administration

50 CFR Part 622

[Docket No. 940553–4223; I.D. 010697B]

Fisheries of the Caribbean, Gulf of Mexico, and South Atlantic; Coastal Migratory Pelagic Resources of the Gulf of Mexico and South Atlantic; Closure

AGENCY: National Marine Fisheries Service (NMFS), National Oceanic and Atmospheric Administration (NOAA), Commerce

ACTION: Closure.

SUMMARY: NMFS closes the commercial run-around gillnet fishery for king mackerel in the exclusive economic zone (EEZ) in the Florida west coast sub-zone. This closure is necessary to protect the overfished Gulf king mackerel resource.

EFFECTIVE DATE: The closure is effective 12:00 noon, local time, January 7, 1997, through June 30, 1997.

FOR FURTHER INFORMATION CONTACT: Mark F. Godcharles, 813–570–5305.

SUPPLEMENTARY INFORMATION: The fishery for coastal migratory pelagic fish

(king mackerel, Spanish mackerel, cero, cobia, little tunny, dolphin, and, in the Gulf of Mexico only, bluefish) is managed under the Fishery Management Plan for the Coastal Migratory Pelagic Resources of the Gulf of Mexico and South Atlantic (FMP). The FMP was prepared by the Gulf of Mexico and South Atlantic Fishery Management Councils (Councils) and is implemented by regulations at 50 CFR part 622 under the authority of the Magnuson-Stevens Fishery Conservation and Management Act.

Based on the Councils' recommended total allowable catch and the allocation ratios in the FMP, NMFS implemented a commercial quota for the Gulf of Mexico migratory group of king mackerel in the Florida west coast sub-zone of 865,000 lb (392,357 kg). That quota was further divided into two equal quotas of 432,500 lb (196,179 kg) for vessels in each of two groups by gear types—vessels fishing with run-around gillnets and those using hook-and-line gear (50 CFR 622.42 (c)(1)(i)(A)(*2*)).

In accordance with 50 CFR 622.43(a)(3), NMFS is required to close any segment of the king mackerel commercial fishery when its allocation or quota is reached, or is projected to be reached, by publishing a notification in the Federal Register. NMFS has determined that the commercial quota of 432,500 lb (196,179 kg) for Gulf group king mackerel for vessels using run-around gillnets in the Florida west coast sub-zone was reached on January 7. Hence, the commercial fishery for king mackerel for such vessels in the Florida west coast sub-zone is closed effective 12:01 noon, local time, January 7, 1997, through June 30, 1997, the end of the fishing year.

The Florida west coast sub-zone extends from 87°31'06'' W. long. (due south of the Alabama/Florida boundary) to: (1) 25°20.4' N. lat. (due east of the Dade/Monroe County, FL, boundary) through March 31, 1997; and (2) 25°48' N. lat. (due west the Monroe/Collier County, FL, boundary) from April 1, 1997, through October 31, 1997.

Classification

This action is taken under 50 CFR 622.43(a)(3) and is exempt from review under E.O. 12866.

Authority: 16 U.S.C. 1801 *et seq.*

Dated: January 6, 1997.

Gary C. Matlock,

Director, Office of Sustainable Fisheries, National Marine Fisheries Service.

[FR Doc. 97–610 Filed 1–7–97; 3:07 pm]

BILLING CODE 3510–22–F

50 CFR Parts 648 and 649

[Docket No. 9609262275–6372–02; I.D. 091196A]

RIN 0648–AI83

Fisheries of the Northeastern United States; Amendments to the Northeast Multispecies, Atlantic Sea Scallop, and American Lobster Fishery Management Plans

AGENCY: National Marine Fisheries Service (NMFS), National Oceanic and Atmospheric Administration (NOAA), Commerce.

ACTION: Final rule.

SUMMARY: NMFS issues this final rule to implement Amendment 8 to the Northeast Multispecies, Amendment 6 to the Atlantic Sea Scallop, and Amendment 6 to the American Lobster Fishery Management Plans (FMPs) to provide a framework abbreviated rulemaking process to address gear conflicts in the New England and Mid-Atlantic regions. These amendments: Add an objective to the Atlantic Sea Scallop and Northeast Multispecies FMPs to allow management of gear conflicts in these fisheries (the American Lobster FMP currently has an objective sufficiently broad in scope to allow management of gear conflicts), adapt the framework process currently in place for the Northeast multispecies and Atlantic sea scallop conservation management programs to allow implementation of a gear conflict management program for all three FMPs, and add a list of management measures to each FMP from which the Council could select future solutions to gear conflicts through the framework adjustment process. The intent of this action is to provide mechanisms to reduce the economic loss caused by gear conflicts.

EFFECTIVE DATE: February 10, 1997.

ADDRESSES: Copies of the amendments, their regulatory impact review and the environmental assessment are available from Christopher Kellogg, Acting Executive Director, New England Fishery Management Council, Suntaug Office Park, 5 Broadway, Saugus, MA 01906–1097.

FOR FURTHER INFORMATION CONTACT: Paul H. Jones, Fishery Policy Analyst, 508–281–9273.

SUPPLEMENTARY INFORMATION: Amendment 8 to the Northeast Multispecies, Amendment 6 to the Atlantic Sea Scallop, and Amendment 6 to the American Lobster FMPs were prepared by the New England Fishery Management Council (Council) in consultation with the Mid-Atlantic Fishery Management Council. A notice of availability for the proposed amendment was published on September 20, 1996 (61 FR 49430), and a proposed rule was published on October 9, 1996 (61 FR 52903). Details of this action are described in the proposed rule and will not be repeated here.

Approved Management Measures

These amendments add an objective to the Atlantic Sea Scallop and Northeast Multispecies FMPs to allow management of gear conflicts in these fisheries. This final rule amends the fisheries' framework process to allow implementation of a gear conflict management program for the FMPs and adds the following list of management measures to each FMP from which the Council could select future solutions to gear conflicts through the framework adjustment process: (1) Designation of restricted areas in one degree square increments (2700 nm), (2) mandatory monitoring of a radio channel by fishers, (3) fixed gear location reporting and plotting requirements, (4) standards of operation when gear conflicts occur, (5) fixed gear marking and setting practices, (6) gear restrictions for specific areas (including time and area closures), (7) vessel monitoring systems, (8) restrictions on the number of fishing vessels or amount of gear, and (9) special permit conditions.

Each framework adopted and submitted by the Council under this process would be an individual action to be reviewed under the requirements of the Magnuson-Stevens Fishery Conservation and Management Act (Magnuson-Stevens Act) and other applicable law. Approval of these amendments implements a process and provides a list of measures as potential options that may be used to resolve gear conflicts. This final rule does not implement any of the measures listed above. To implement one or more of the measures listed, an individual framework action would require documentation and analyses sufficient to determine consistency with all applicable laws.

A framework action would only be used to address gear conflicts occurring in Federal waters. The Council determined, and NMFS agrees, that the gear conflict framework procedure is principally designed to address true gear conflicts and not as a proxy for addressing what may be an allocation issue between users.

For the purpose of these amendments, the definition of gear conflict (at 50 CFR 600.10) is any incident at sea involving

one or more fishing vessels: (1) In which one fishing vessel or its gear comes into contact with another vessel or the gear of another vessel, and (2) that results in the loss of, or damage to, a fishing vessel, fishing gear, or catch.

Comments and Responses

Written comments were received from the U.S. Coast Guard (USCG), the U.S. Department of State, and two individuals. Specific comments are discussed and responded to below.

Comment: The USCG, the U.S. Department of State, and two individuals support implementation of the amendments to provide a framework process to address gear conflicts in the New England and Mid-Atlantic regions.

Response: The comments have been noted and the amendments are approved.

Comment: The USCG expressed concern over the burdensome requirement of fixed gear location reporting and plotting. They state that any economic benefits achieved by implementing this measure would be significantly reduced by the costs to manage it. *Response*: NMFS understands this problem and does not intend to approve future framework actions with this management measure until these problems are sufficiently worked out.

Classification

The Regional Administrator, Northeast Region, NMFS, determined that the amendments are necessary for the conservation and management of the Northeast multispecies, Atlantic sea scallop, and American lobster fisheries and that it is consistent with the Magnuson-Stevens Act and other applicable law.

This final rule has been determined to be not significant for the purposes of E.O. 12866.

The Assistant General Counsel for Legislation and Regulation of the Department of Commerce certified to the Chief Counsel for Advocacy of the Small Business Administration that this rule will not have a significant economic impact on a substantial number of small entities. Specific findings supporting that conclusion were summarized in the proposed rule and are not repeated here. No public comments on the certification were received. As a result, no regulatory flexibility analysis was prepared.

NMFS reinitiated consultation on the Northeast Multispecies, Atlantic Sea Scallop and American Lobster FMPs, which was completed on December 13, 1996. These consultations considered new information concerning the status of the northern right whale. Based on the reinitiation of the Section 7 consultation, NMFS determined that: (1) The fishing activities carried out under the Northeast Multispecies and American Lobster FMPs are likely to jeopardize the continued existence of the northern right whale, but a reasonable and prudent alternative has been developed and is being implemented with this rulemaking, to avoid jeopardy, (2) the prosecution of the multispecies, lobster, and scallop fisheries will not adversely modify right whale critical habitat, (3) the fishing practices allowed under the American Lobster FMP and the Northeast Multispecies FMP may affect, but are not likely to jeopardize, the continued existence of the harbor porpoise and the distinct population segment of Atlantic salmon stocks found in certain Maine rivers, which are both currently proposed to be listed as threatened, and (4) no new information has become available that changes the basis for previous determinations that the Atlantic Scallop FMP and prosecution of the scallop fishery is not likely to adversely affect endangered, threatened, or proposed species, or adversely modify critical habitat. The new information provided above does not change the basis for the conclusions of the 1994 Biological Opinion that the fishing activities carried out under the American Lobster and Northeast Multispecies FMPs may affect, but are not likely to jeopardize the continued existence of the other endangered and threatened whale and sea turtle species under NMFS' jurisdiction.

List of Subjects

50 CFR Part 648

Fisheries, Fishing, Reporting and recordkeeping requirements.

50 CFR Part 649

Fisheries.

Dated: January 6, 1997.

Charles Karnella,

Acting Assistant Administrator for Fisheries, National Marine Fisheries Service.

For the reasons set out in the preamble, 50 CFR parts 648 and 649 are amended as follows:

PART 648—FISHERIES OF THE NORTHEASTERN UNITED STATES

1. The authority citation for part 648 continues to read as follows:

Authority: 16 U.S.C. 1801 *et seq.*

2. In § 648.55, the section heading is revised, paragraphs (d) through (f) are redesignated as paragraphs (f) through (h), respectively, new paragraphs (d) and (e) are added, and newly redesignated paragraph (f)(3) is revised to read as follows:

§ 648.55 Framework specifications.

* * * * *

(d) The Council may make recommendations to the Regional Director to implement measures in accordance with the procedures described in this subpart to address gear conflict as defined under 50 CFR 600.10. In developing such recommendation, the Council shall define gear management areas, each not to exceed 2700 mi^2 (5000.4 km^2), and seek industry comments by referring the matter to its standing industry advisory committee for gear conflict, or to any ad hoc industry advisory committee that may be formed. The standing industry advisory committee or ad hoc committee on gear conflict shall hold public meetings seeking comments from affected fishers and develop findings and recommendations on addressing the gear conflict. After receiving the industry advisory committee findings and recommendations, or at any other time, the Council shall determine whether it is necessary to adjust or add management measures to address gear conflicts and which FMPs must be modified to address such conflicts. If the Council determines that adjustments or additional measures are necessary, it shall develop and analyze appropriate management actions for the relevant FMPs over the span of at least two Council meetings. The Council shall provide the public with advance notice of the availability of the recommendation, the appropriate justification and economic and biological analyses, and opportunity to comment on them prior to and at the second or final Council meeting before submission to the Regional Director. The Council's recommendation on adjustments or additions to management measures for gear conflicts must come from one or more of the following categories:

(1) Monitoring of a radio channel by fishing vessels.

(2) Fixed gear location reporting and plotting requirements.

(3) Standards of operation when gear conflict occurs.

(4) Fixed gear marking and setting practices.

(5) Gear restrictions for specific areas (including time and area closures).

(6) Vessel monitoring systems.

(7) Restrictions on the maximum number of fishing vessels or amount of gear.

(8) Special permitting conditions.

(e) The measures shall be evaluated and approved by the relevant committees with oversight authority for the affected FMPs. If there is disagreement between committees, the Council may return the proposed framework adjustment to the standing or ad hoc gear conflict committee for further review and discussion.

(f) * * *

(3) Whether there is an immediate need to protect the resource or to impose management measures to resolve gear conflicts.

* * * * *

3. In § 648.90, paragraph (b) introductory text and paragraph (b)(1) are revised, paragraphs (b)(2) and (b)(3) are redesignated as paragraphs (b)(3) and (b)(4), respectively, a new paragraph (b)(2) is added and newly redesignated paragraph (b)(3)(iii) is revised to read as follows:

§ 648.90 Framework specifications.

* * * * *

(b) *Within season management action*. The Council may, at any time, initiate action to add or adjust management measures if it finds that action is necessary to meet or be consistent with the goals and objectives of the Northeast Multispecies FMP or to address gear conflicts as defined under § 600.10 of this chapter.

(1) *Adjustment process*. After a management action has been initiated, the Council shall develop and analyze appropriate management actions over the span of at least two Council meetings. The Council shall provide the public with advance notice of the availability of both the proposals and the analysis and opportunity to comment on them prior to and at the second Council meeting. The Council's recommendation on adjustments or additions to management measures, other than to address gear conflicts, must come from one or more of the following categories: DAS changes, effort monitoring, data reporting, possession limits, gear restrictions, closed areas, permitting restrictions, crew limits, minimum fish sizes, onboard observers, minimum hook size and hook style, the use of crucifiers in the hook-gear fishery, fleet sector shares, recreational fishing measures, area closures and other appropriate measures to mitigate marine mammal entanglements and interactions, and any other management measures currently included in the FMP.

(2) *Adjustment process for gear conflicts*. The Council may develop a recommendation on measures to address gear conflict as defined under 50 CFR 600.10, in accordance with the procedure specified in § 648.55(d) and (e).

(3) * * *

(iii) Whether there is an immediate need to protect the resource or to impose management measures to resolve gear conflicts.

* * * * *

PART 649—AMERICAN LOBSTER FISHERY

1. The authority citation for part 649 continues to read as follows:

Authority: 16 U.S.C. 1801 *et seq*.

2. In § 649.44, the section heading is revised, paragraphs (e) through (g) are redesignated as paragraphs (f) through (h), respectively, new paragraph (e) is added, and newly redesignated paragraph (f)(3) is revised to read as follows:

§ 649.44 Framework specifications.

* * * * *

(e) The Council may develop a recommendation on measures to address gear conflicts as defined under 50 CFR 600.10 in accordance with the procedure specified in § 648.55(d) and (e).

(f) * * *

(3) Whether there is an immediate need to protect the resource or to impose management measures to resolve gear conflicts; and

* * * * *

[FR Doc. 97–590 Filed 1–9–97; 8:45 am]

BILLING CODE 3510–22–F

Proposed Rules

Federal Register
Vol. 62, No. 7
Friday, January 10, 1997

This section of the FEDERAL REGISTER contains notices to the public of the proposed issuance of rules and regulations. The purpose of these notices is to give interested persons an opportunity to participate in the rule making prior to the adoption of the final rules.

DEPARTMENT OF AGRICULTURE

Animal and Plant Health Inspection Service

9 CFR Part 78

[Docket No. 96–090–1]

Brucellosis; State and Area Classification Standards

AGENCY: Animal and Plant Health Inspection Service, USDA.

ACTION: Proposed rule.

SUMMARY: We are proposing to amend the brucellosis regulations to provide for the Administrator to conduct a special review of areas with fewer than 10,000 herds of cattle or bison in order to determine whether an area may qualify for Class A brucellosis status. Currently, the brucellosis regulations provide for such reviews to be conducted at the State level. Extending the provisions for special review to the area level would allow areas with a herd infection rate over 0.25 percent, but that might otherwise meet the criteria for Class A status, to undergo a special review to determine whether Class A status should be conferred on the area.

DATES: Consideration will be given only to comments received on or before March 11, 1997.

ADDRESSES: Please send an original and three copies of your comments to Docket No. 96–090–1, Regulatory Analysis and Development, PPD, APHIS, Suite 3C03, 4700 River Road Unit 118, Riverdale, MD 20737–1238. Please state that your comments refer to Docket No. 96–090–1. Comments received may be inspected at USDA, room 1141, South Building, 14th Street and Independence Avenue SW., Washington, DC, between 8 a.m. and 4:30 p.m., Monday through Friday, except holidays. Persons wishing to inspect comments are requested to call ahead on (202) 690–2817 to facilitate entry into the comment reading room.

FOR FURTHER INFORMATION CONTACT: Dr. M.J. Gilsdorf, National Brucellosis Epidemiologist, Brucellosis Eradication Staff, VS, APHIS, 4700 River Road Unit 36, Riverdale, MD 20737–1228, (301) 734–7708; or E-mail: mgilsdorf@aphis.usda.gov.

SUPPLEMENTARY INFORMATION:

Background

Brucellosis is a contagious disease affecting animals and humans, caused by bacteria of the genus *Brucella*. In its principal animal hosts, brucellosis is characterized by abortion and impaired fertility.

Through a cooperative State and Federal effort, the United States is now approaching total eradication of the field strain *Brucella abortus* in domestic cattle and bison herds. As of November 30, 1996, there were only 40 known infected domestic cattle and bison herds, and the U.S. Department of Agriculture's Animal and Plant Health Inspection Service (APHIS) had declared 36 States, Puerto Rico, and the U.S. Virgin Islands free of the disease.

The brucellosis regulations contained in 9 CFR part 78 (referred to below as the regulations) provide a system for classifying States or portions of States (areas) according to the rate of *Brucella abortus* infection present and the general effectiveness of the brucellosis control and eradication program conducted in the State or area. The classifications are Class Free, Class A, Class B, and Class C; States or areas that do not meet the minimum standards for Class C may be placed under Federal quarantine. At this point in the cooperative State/Federal brucellosis eradication program, all States have achieved either Class Free or Class A status; there are no classified areas. (An ''area'' is defined in the regulations as ''that portion of any State which has a separate brucellosis classification under this part.'')

The definition of ''Class A State or area'' provides, in part, that for a State or area to qualify for Class A status, no more than 0.25 percent of all herds in the State or area (i.e., 2.5 herds per 1,000 herds) may contain brucellosis reactors during any consecutive 12-month period. However, those regulations also provide for an exception to be made to that herd infection rate requirement when a State contains 10,000 or fewer herds. In such cases, the Administrator may conduct a special review to determine whether a State with such a small herd population would qualify for Class A status; the location of herds in the State, sources of brucellosis, and the brucellosis control measures taken by the State are considered in that review. Based on the results of the review, the Administrator may determine that the State may be granted Class A status despite a herd infection rate higher than 0.25 percent. As currently written, this special review exception applies only to States—no provision is made for a special review of an area with fewer than 10,000 herds.

In some Class A States where there are only a few remaining affected herds, it is likely that most of the area within the State could qualify for Class Free area status. However, the lack of a special review exception to qualify areas as Class A is deterring the States from requesting that the brucellosis-free portions of the State be considered a Class Free area. This is because the remaining area within the State—i.e., that portion of the State that still contains affected herds—would likely have its status downgraded from Class A to Class B or lower because the ratio of affected herds to total herds in that area would place its herd infection rate above 0.25 percent. Given that the potentially downgraded area has met the criteria for, and enjoyed the benefits of, the Class A status held by the State as a whole, it does not appear reasonable to downgrade that area's status in the absence of any actual increase in the incidence of brucellosis within that area.

Therefore, we are proposing to amend the definition of ''Class A State or area'' to extend the provisions for special review in States with fewer than 10,000 herds to areas with fewer than 10,000 herds. The same considerations that factor into the special review of States—i.e., locations of herds, sources of brucellosis, and brucellosis control measures—would apply to the special review of areas. Thus, an area with fewer than 10,000 herds that has a herd infection rate greater than 0.25 percent, but that might otherwise be eligible for Class A status, could be the subject of a special review by APHIS. If the disposition of the herds within that area made the transmission of brucellosis from affected herds to other herds unlikely, if the sources of brucellosis infection within the brucellosis-affected herds were found to not present a threat

of also infecting other herds, and if the measures taken within the area to control brucellosis were found to be satisfactory, then the area could be granted Class A status. We believe that granting an area Class A status based on the satisfactory outcome of such a review would not result in an increased likelihood that brucellosis might be spread to adjacent States or areas, especially given that one of the factors that would be considered is the measures taken within the area to control the spread of brucellosis. If those measures were found to be inadequate, the area would not be granted Class A status.

Miscellaneous

We are also proposing to amend several sections of the regulations that contain references to cattle without also referring to bison. In nearly all instances, those general provisions of the regulations that apply to cattle also apply to bison; however, several definitions in §78.1, as well as one sentence in §78.40 and several sentences in §78.44, refer only to cattle when the reference should include both cattle and bison. We would amend those three sections to rectify those omissions.

Executive Order 12866 and Regulatory Flexibility Act

This proposed rule has been reviewed under Executive Order 12866. The rule has been determined to be not significant for the purposes of Executive Order 12866 and, therefore, has not been reviewed by the Office of Management and Budget.

This proposed rule would amend the brucellosis regulations to provide for the Administrator to conduct a special review of areas with fewer than 10,000 herds of cattle or bison in order to determine whether an area may qualify for Class A brucellosis status. Extending the provisions for special review to the area level would allow areas with a herd infection rate over 0.25 percent, but that might otherwise meet the criteria for Class A status, to undergo a special review to determine whether Class A status could be conferred on the area.

This proposed rule would allow the brucellosis status of some parts of a State to advance without triggering a concomitant decrease in the brucellosis status of the remaining areas within the State. Thus, the status quo in terms of testing requirements would be maintained in the area of the State that maintains Class A status, while testing requirements would be eased in that portion of the State gaining Class Free status, which would result in an overall positive economic effect due to decreased testing costs within the State.

Test-eligible cattle and bison from Class A States or areas must have a negative blood test for brucellosis within 30 days prior to movement to be moved to a Class Free State or area. If a portion of a State were to qualify as a Class Free area and the remaining area within the State retained Class A status, the regulations would allow breeding cattle and bison to be moved from the Class Free area of the State to herds in Class Free States without prior testing for brucellosis. Therefore, cattle and bison owners in that portion of a State that qualified as a Class Free area would collectively realize a savings in testing expenses, which is, on average, approximately $5.00 per head. The testing requirements for the movement of cattle and bison from the Class A area of the State would remain the same, so there would be neither an increase nor a decrease in testing costs for cattle and bison owners within the Class A area.

Under these circumstances, the Administrator of the Animal and Plant Health Inspection Service has determined that this action would not have a significant economic impact on a substantial number of small entities.

Executive Order 12372

This program/activity is listed in the Catalog of Federal Domestic Assistance under No. 10.025 and is subject to Executive Order 12372, which requires intergovernmental consultation with State and local officials. (See 7 CFR part 3015, subpart V.)

Executive Order 12988

This proposed rule has been reviewed under Executive Order 12988, Civil Justice Reform. If this proposed rule is adopted: (1) All State and local laws and regulations that are in conflict with this rule will be preempted; (2) no retroactive effect will be given to this rule; and (3) administrative proceedings will not be required before parties may file suit in court challenging this rule.

Paperwork Reduction Act

This rule contains no new information collection or recordkeeping requirements under the Paperwork Reduction Act of 1995 (44 U.S.C. 3501 et seq.).

Regulatory Reform

This action is part of the President's Regulatory Reform Initiative, which, among other things, directs agencies to remove obsolete and unnecessary regulations and to find less burdensome ways to achieve regulatory goals.

List of Subjects in 9 CFR Part 78

Animal diseases, Bison, Cattle, Hogs, Quarantine, Reporting and recordkeeping requirements, Transportation.

Accordingly, 9 CFR part 78 would be amended as follows:

PART 78—BRUCELLOSIS

1. The authority citation for part 78 would continue to read as follows:

Authority: 21 U.S.C. 111–114a–1, 114g, 115, 117, 120, 121, 123–126, 134b, and 134f; 7 CFR 2.22, 2.80, and 371.2(d).

2. Section 78.1 would be amended as follows:

§ 78.1 [Amended]

a. In the definition of *Certificate*, paragraph (a), the second sentence, by adding the words ''or bison'' immediately after the word ''cattle''.

b. In the definition of *Class A State or area*:

i. In paragraph (a)(3), by adding the words ''or bison'' immediately after the word ''cattle'' each time it appears;

ii. In paragraph (b)(1), the first sentence, by removing the word ''cattle'' and by adding the words ''or areas'' after the words ''except in States'';

iii. In paragraph (b)(1), the second sentence, by adding the words ''or areas'' after the word ''States''; and

iv. In paragraph (b)(1), the third sentence, by adding the words ''or area'' after the word ''State''.

c. In the definition of *Class B State or area*, paragraph (a)(3), by adding the words ''or bison'' immediately after the word ''cattle'' each time it appears; and in paragraph (b)(1), the first sentence, by removing the word ''cattle''.

d. In the definition of *Class C State or area*, paragraph (a)(3), by adding the words ''or bison'' immediately after the word ''cattle'' each time it appears; and in paragraph (b)(1), the first sentence, by removing the word ''cattle''.

e. In the definition of *Class Free State or area*, in paragraph (a)(3), by adding the words ''or bison'' immediately after the word ''cattle'' each time it appears; and in paragraph (b)(1), by removing the word ''cattle'' both times it appears.

f. By revising the heading and definition of *Market cattle identification test cattle* to read as set forth below.

g. In the definition of *Official brand inspection certificate*, by adding the words ''or bison'' immediately after the word ''cattle''.

h. In the definition of *Official brand recording agency*, by adding the words ''or bison'' immediately after the word ''cattle''.

i. In the definition of *Originate*, paragraph (c), by adding the words ''or

bison'' immediately after the word ''cattle'' both times it appears.

j. In the definition of *Permit for entry,* by adding the words ''or bison'' immediately after the word ''cattle''.

§ 78.1 Definitions.

* * * * *

Market cattle identification test cattle and bison. Cows and bulls 2 years of age or over that have been moved to recognized slaughtering establishments, and test-eligible cattle and bison that are subjected to an official test for the purposes of movement at farms, ranches, auction markets, stockyards, quarantined feedlots, or other assembly points. Such cattle and bison shall be identified by an official eartag and/or United States Department of Agriculture backtag prior to or at the first market, stockyard, quarantined feedlot, or slaughtering establishment they reach.

* * * * *

§ 78.40 [Amended]

3. In § 78.40, paragraph (c) would be amended by adding the words ''and bison'' immediately after the word ''cattle''.

§ 78.44 [Amended]

4. Section 78.44 would be amended as follows:

a. In paragraph (c), in paragraph (9) of the Agreement, by adding the words ''and bison'' immediately after the word ''cattle''.

b. In paragraph (c), in paragraph (10) of the Agreement, by adding the words ''and bison'' immediately after the words ''of cattle''; by adding the words ''or bison'' immediately after the words ''test-eligible cattle''; and by adding the words ''or bison'' immediately after the words ''other cattle''.

c. In paragraph (c), in paragraph (11) of the Agreement, by adding the words ''and bison'' immediately after the words ''of cattle''; by adding the words ''or bison'' immediately after the words ''test-eligible cattle''; and by adding the words ''or bison'' immediately after the words ''other cattle''.

d. In paragraph (c), in paragraph (12) of the Agreement, by adding the words ''and bison'' immediately after the words ''of cattle''; by adding the words ''or bison'' immediately after the words ''test-eligible cattle''; and by adding the words ''or bison'' immediately after the words ''other cattle''.

e. In paragraph (c), in paragraph (13) of the Agreement, by adding the words ''or bison'' immediately after the word ''cattle'' both times it appears.

f. In paragraph (d), in paragraph (9) of the Agreement, by adding the words ''and bison'' immediately after the word ''cattle''.

g. In paragraph (d), in paragraph (10) of the Agreement, by adding the words ''and bison'' immediately after the words ''of cattle''; by adding the words ''or bison'' immediately after the words ''test-eligible cattle''; and by adding the words ''or bison'' immediately after the words ''other cattle''.

h. In paragraph (d), in paragraph (11) of the Agreement, by adding the words ''and bison'' immediately after the words ''of cattle''; by adding the words ''or bison'' immediately after the words ''test-eligible cattle''; and by adding the words ''or bison'' immediately after the words ''other cattle''.

i. In paragraph (d), in paragraph (12) of the Agreement, by adding the words ''and bison'' immediately after the words ''of cattle''; by adding the words ''or bison'' immediately after the words ''test-eligible cattle''; and by adding the words ''or bison'' immediately after the words ''other cattle''.

j. In paragraph (d), in paragraph (13) of the Agreement, by adding the words ''or bison'' immediately after the word ''cattle'' both times it appears.

Done in Washington, DC, this 7th day of January 1997.

Donald W. Luchsinger,

Acting Administrator, Animal and Plant Health Inspection Service.

[FR Doc. 97–624 Filed 1–9–97; 8:45 am]

BILLING CODE 3410–34–P

DEPARTMENT OF THE INTERIOR

Office of Surface Mining Reclamation and Enforcement

30 CFR Part 926

Surface Coal Mining and Reclamation Operations Under the Federal Lands Program; State-Federal Cooperative Agreements; Montana

AGENCY: Office of Surface Mining Reclamation and Enforcement (OSM), Interior.

ACTION: Proposed rule.

SUMMARY: The State of Montana (Governor) and the Secretary of the Department of the Interior (Secretary) are proposing to amend the cooperative agreement between the Department of the Interior and the State of Montana for the regulation of surface coal mining and reclamation operations on Federal lands within Montana under the permanent regulatory program. The proposed rulemaking would streamline the permitting process in Montana by delegating to Montana the sole responsibility to issue permits for coal mining and reclamation operations on Federal lands under the revised Federal lands program regulations, and would eliminate duplicative permitting requirements, thereby increasing governmental efficiency, which is one of the purposes of the cooperative agreement. This amendment would also update the cooperative agreement to reflect current regulations and agency structures. Cooperative agreements are provided for under section 523(c) of the Surface Mining Control and Reclamation Act of 1977 (SMCRA). This notice provides information on the proposed changes to the cooperative agreement.

DATES: *Written comments:* Written comments must be received by 4:00 p.m., M.S.T. on March 11, 1997.

Public hearing: Anyone wishing to testify at a public hearing must submit a request on or before 4:00 p.m., M.S.T. on January 31, 1997. Because OSM will hold a public hearing only if one is requested, hearing arrangements, dates and times, if any, will be announced in a subsequent Federal Register notice. If no one requests an opportunity to testify at the public hearing, the hearing will not be held. Any disabled individual who has need for special accommodation to attend a public hearing should contact the individual listed under **FOR FURTHER INFORMATION CONTACT**.

Public Meeting: If only one person requests an opportunity to testify at a hearing, a public meeting, rather than a public hearing, may be held. Persons wishing to meet with OSM representatives to discuss the proposed amendment may request a meeting by contacting the person listed under **FOR FURTHER INFORMATION CONTACT**. All such meetings will be open to the public and, if possible, notices of meetings will be posted at the locations listed under **ADDRESSES**. A written summary of each meeting will be made a part of the administrative record.

ADDRESSES: Written comments should be mailed or hand delivered to the Office of Surface Mining Reclamation and Enforcement, Western Regional Coordinating Center, Suite 3320, 1999 Broadway, Denver, CO 80202–5733.

Copies of the Montana program, proposed amendments to the cooperative agreement and the related information required under 30 CFR Part 745 will be available for public review at the addresses listed below during normal business hours, Monday through Friday, excluding holidays. Each requester may receive one free copy of the proposed revisions by contacting any one of the following persons.

Ranvir Singh, Western Regional Coordinating Center, Office of Surface Mining Reclamation and Enforcement, 1999 Broadway, Suite 3320, Denver, CO 80202–5733, Telephone: (303) 844–1489.

Guy Padgett, Director, Casper Field Office, Office of Mining Reclamation and Enforcement, 100 East ''B'' Street, Room 2128, Casper, WY 82601–1918, Telephone: (307) 261–6550.

Jan Sensibaugh, Montana Department of Environmental Quality, 1520 East Sixth Avenue, Helena, MT 59620–0901, Telephone: (406) 444–5270.

FOR FURTHER INFORMATION CONTACT:

Ranvir Singh, Western Regional Coordinating Center, Office of Surface Mining Reclamation and Enforcement, 1999 Broadway, Suite 3320, Denver, CO, 80202–5733, Telephone: (303) 844–1489.

SUPPLEMENTARY INFORMATION:

I. Background on the Montana Cooperative Agreement

On June 4, 1980, the Governor submitted a request for a cooperative agreement between the Department of the Interior and the State of Montana to give the State primacy in the administration of its approved regulatory program on Federal lands within Montana. The Secretary approved the cooperative agreement on January 19, 1981 (46 FR 20983, April 8, 1981). The text of the existing cooperative agreement can be found at 30 CFR § 926.30.

On July 5, 1994, the Governor, pursuant to 30 CFR § 745.14 and at the recommendation of OSM, submitted a proposed modified cooperative agreement to address among other things, elimination of duplicative State/Federal permitting efforts and streamlining of the permitting processes. The proposed modifications would amend the existing cooperative agreement and delegate to Montana the sole responsibility to issue coal mining and reclamation permits on Federal lands consistent with the revised Federal lands regulations at 30 CFR Part 740 (48 FR 6912, February 16, 1983). This rulemaking would also amend the existing cooperative agreement to reflect current agency organizations.

In accordance with the provisions of 30 CFR 732.17(h), OSM is seeking comments on whether the proposed amendment satisfies the applicable program approval criteria of 30 CFR 732.15. If the amendment is deemed adequate, it will become part of the Montana program.

II. Proposed Revisions to the Cooperative Agreement

A summary of the proposed changes to the existing cooperative agreement appears below. These proposed revisions are subject to further changes because of public comments and further discussions with Montana. The full text of the proposed revised cooperative agreement is being published for continuity, and the convenience of the reader.

The introductory language preceding existing Article I would be revised to read ''(t)he Governor of the State of Montana (Governor) and the Secretary of the Department of the Interior (Secretary) enter into a State-Federal Cooperative Agreement (Agreement) to read as follows:'' This change would be made to assure language consistency with other State-Federal cooperative agreements, and to specify position designations of representatives of the two entities of the State and Federal governments that would sign the cooperative agreement. The second paragraph of the existing introductory language would be deleted because it would essentially duplicate the proposed language.

Existing Article I: Introduction and Purpose

Proposed Revised Article I: Authority, Purposes, and Responsible Agencies

The heading of existing Article I would be revised to read *Article I: Authority, Purposes, and Responsible Agencies.* This revision is proposed so that the revised heading correctly represent the three paragraphs that comprise this article as described below.

Authority

Existing paragraph A would be given the heading *A. Authority* to make it consistent with other cooperative agreements. The language in existing paragraph A would be revised to delegate to Montana the responsibility to review and approve coal exploration operations that are not subject to 43 CFR Group 3400. This change is in conformance with the Federal lands regulations at 30 CFR 740.4(c)(6).

Purposes

Existing paragraph B would be given the heading *B. Purposes,* and minor word changes would be made for clarity.

Responsible Agencies

A new paragraph *C. Responsible Agencies* would be added to replace and consolidate in one place the provisions of paragraphs A and B of existing Article IV and would specify, as in the existing cooperative agreement, that the Office of Surface Mining Reclamation and Enforcement (OSM) would administer the cooperative agreement on behalf of the Secretary. However, since there has been a change in the name of the State agency with authority to regulate coal mining in Montana subsequent to the date of existing cooperative agreement, the Montana Department of Environmental Quality (DEQ), instead of the Montana Department of State Lands (State Lands), would administer the cooperative agreement on behalf of the Governor.

Existing Article II: Effective Date

Proposed Revised Article II: Effective Date

Existing Article II would be revised by replacing the roman numeral ''X'' at the end of the last sentence with roman numeral ''XI'' to correspond to the proposed renumbering of existing Article X. No change in effect is intended.

Existing Article XVI: Definitions

Proposed Revised Article III: Definitions

Existing *Article XVI: Definitions* would be renumbered to read *Article III: Definitions.* This change is proposed to assure that this article appears in the same sequence as in other State-Federal cooperative agreements. The existing language would be retained to provide that the terms and phrases used in the cooperative agreement would have the same meanings as they have in SMCRA, 30 CFR Parts 700, 701, 740, and the State Program. Additional language would be included to define the term ''Permit Application Package (PAP)'' to describe the material submitted by an applicant for a surface coal mining and reclamation operation permit on Federal lands (See 48 FR 6912, February 16, 1983). OSM adopted the term because there are requirements for mining on Federal lands that are in addition to those required by permit application under the State program for non-Federal lands. For example, operations on Federal lands may be subject to requirements of the Federal land management agency or of the Secretary under Federal laws other than SMCRA. The PAP would include such additional information as would be required by the State program. See definition of ''permit application package'' under 30 CFR 740.5.

The definition of PAP in the revised cooperative agreement includes the term ''permit amendment'' in addition to all other terms in the definition of PAP

under CFR 740.5. The term ''permit amendment'' under the Montana State Program means any change in the mine or reclamation plan that results in expansion or decrease of the operation's permitted boundaries, excluding incidental boundary changes (ARM 26.4.301(13).

Existing Article III: Scope

Proposed Revised Article IV: Applicability

The heading of existing Article III would be revised to read *Article IV: Applicability*. This revision is proposed because the word ''applicability'' is more appropriate than the word ''scope'' to describe what is contained in this article. The new heading would also be consistent with that in other State-Federal cooperative agreements. Existing language would be revised to delete an obsolete reference to conditional approval of Montana's permanent State program, and to include additional current regulatory and statutory references that are relevant but are not presently included. These revisions would not change the intent of existing Article III.

Existing Article IV: Requirements for Cooperative Agreement

Proposed Revised Article V: Requirements for the Agreement

Existing Article IV would be renumbered and retitled to read *Article V: Requirements for the Agreement*. This as well as other proposed changes to Article IV are discussed below.

The change from the existing roman numeral IV to roman numeral V is being made to conform to the revised numbering of preceding articles. The word ''agreement'' would be used in place of phrase ''cooperative agreement'' to conform to the introductory paragraph of the Cooperative Agreement and is intended to be merely an editorial change.

As explained above, the provisions of existing paragraphs A and B have been consolidated into new paragraph *C. Responsible Agencies* of proposed Article I. The remaining provisions of existing Article IV would be reorganized into six paragraphs as explained below. The introductory language in the existing Article IV would be included without any substantive changes in paragraph A to affirm that the Governor and the Secretary would comply with all provisions of the Agreement.

Funds

Existing paragraph *C. Funds* would become paragraph *B. Funds* of proposed Article V, and would consist of three proposed subparagraphs.

Proposed subparagraph 1 would retain all the language of the first two sentences of existing paragraph C. This subparagraph would also provide that the Federal Assistance Manual (FAM) would be used in determining the amount of grant funds to be reimbursed to DEQ. The existing cooperative agreement does not include this provision. Therefore, in order to comply with regulations at 30 CFR Part 735, reference to the use of FAM would be included to specify that the amount of reimbursement of DEQ for administration and enforcement on Federal lands is not limitless but is subject to the provisions of FAM.

Proposed subparagraph 2 contains a new provision to address the possibility when necessary funds referred to in subparagraph 1 may not be appropriated to OSM to reimburse the State. This new provision would describe the procedure to be used in dealing with the emergencies that may be caused by unavailability of sufficient Federal funds, and to insure that mining operations on Federal lands in Montana would be regulated in accordance with the State Program.

Proposed subparagraph 3 would be added to clarify that the amount of funds reimbursed to DEQ are not fixed but are subject to adjustments in accordance with the program income provisions of 43 CFR Part 12. This provision is added to comply with Financial Management requirements of 30 CFR 735.25.

Reports and Records

Existing paragraph *D. Reports* and Records would become paragraph *C. Reports and Records* of proposed Article V, and would be revised to make minor changes to improve clarity, and to remove reference to an OSM organizational structure that is no longer in use. As stated above OSM would administer the cooperative agreement on behalf of the Secretary, the word ''Secretary'' has been replaced by the acronym ''OSM''. A new provision has been added regarding the final evaluation report that OSM prepares and submits to the Congress and other interested parties about State administration and enforcement of the cooperative agreement. According to this provision OSM would be required to attach DEQ's comments on the report prior to its being submitted to the Congress and disseminated to other interested parties. This requirement would provide the Congress and the public an opportunity to know not only how OSM considers the State's performance but also the State's views on its own performance.

Personnel

Existing paragraph *E. Personnel* would become paragraph *D. Personnel* of proposed Article V, and the existing language would be incorporated in the renumbered paragraph. No change in the meaning is intended.

Equipment and Facilities

Heading of the existing paragraph *F. Equipment and Laboratories* would be revised to read as *E. Equipment and Facilities,* to more appropriately describe the contents of this paragraph. The language in the existing paragraph would be retained without any substantive changes in its intent.

Permit Application Fees and Civil Penalties

Existing paragraph *G. Permit Application Fees* would be renumbered and retitled as paragraph *F. Permit Application Fees and Civil Penalties.* The change in title is to assure conformance with other cooperative agreements. The existing provision regarding all permit fees to retained by the State and deposited in the General Fund would be deleted because it does not comply with revised Federal regulations. In order to comply with the Federal regulations regarding financial management, new language would be added to incorporate current regulatory references, and Federal and State program requirements with respect to civil penalties that are not included in the existing cooperative agreement.

Existing Article V: Policies and Procedures: Mine Plan Review

Proposed Revised Article VI: Review and Approval of the PAP or Application for Transfer, Assignment or Sale of Permit Rights

The number and heading of the existing *Article V: Policies and Procedures: Mine Plan Review* would be revised to read *Article VI: Review and Approval of the PAP or Application for Transfer, Assignment or Sale of Permit Rights.* Renumbering is necessary to conform to revised numbering of preceding articles. The change in heading is proposed to accurately represent various topics that are parts of this article.

Provisions of existing Article V would be revised to be consistent with other cooperative agreements, to include additional requirements of the Federal lands program regulations at 30 CFR Parts 740, 745, and 746, to delete references to obsolete regulations, and to add references to current regulations.

The proposed Article VI would include all relevant provisions of existing Article V, and would consist of three major headings A, B, and C as described below.

Receipt and Distribution of the PAP or Application for Transfer, Assignment or Sale of Permit Rights

The title of existing paragraph A would be revised to read *A. Receipt and Distribution of the PAP or Application for Transfer, Assignment or Sale of Permit Rights.* This change is proposed to assure consistency with the revised Federal lands regulations at 30 CFR 740.

Some of the provisions of existing paragraph A would be revised and incorporated in proposed subparagraph A.1. The existing requirement that the operator submit to the State and the Regional Director an appropriate number of identical copies of the mining and reclamation plan and permit application or an application for major modification to an approved mining plan and permit, would be replaced by the provision that the applicant submit to DEQ an appropriate number of copies of the PAP or application for transfer, assignment or sale of permit rights. This change is proposed to eliminate duplication and make DEQ the sole recipient of the permit applications. Other existing requirements with respect to the form and contents of the application to ascertain compliance with various State and Federal laws and regulations would be retained in subparagraph A.1 but would be revised to incorporate minor editorial changes and current statutory and regulatory citations.

A new subparagraph A.2 would be added to provide that after receipt of the PAP, or application for transfer, assignment or sale of permit rights, DEQ would ensure that an appropriate number of copies of the PAP or applicant for transfer, assignment or sale of permit rights, are provided to OSM, the Federal Land Management Agency, and any other appropriate Federal agency. This provision would further give DEQ the sole responsibility for distributing copies of permit applications to appropriate agencies, and would eliminate duplication of effort.

Review of the PAP or Application for Transfer, Assignment or Sale of Permit Rights

The title of existing paragraph *B. Mine Plan Review Procedures* would be revised to read *B. Review of the PAP Application for Transfer, Assignment or Sale of Permit Rights.* This change is being proposed to assure clarity, and consistency with Federal lands regulations at 30 CFR Part 740.

Most of the relevant provisions of existing paragraph B comprised of subparagraph 1 through 9 would be incorporated into four subparagraphs of the proposed paragraph B. However, in order to keep the various provisions in a logical sequence and under appropriate headings, the relevant language would be moved from the existing subparagraph to another proposed subparagraph. Also, the phrase ''mine plan and permit application'' extensively used in the existing cooperative agreement would be replaced by the phrase ''permit application package (PAP) or application for transfer, assignment or sale of permit rights'' to conform to the language in revised Federal regulations. Furthermore, the phrase ''State Lands'' would be replaced by Department of Environmental Quality (DEQ), and the ''Regional Director'' and ''Secretary'' would be replaced by ''OSM'', where appropriate. These modifications are proposed because of recent changes in the organizational structure of the Montana State government and OSM.

Responsibilities of DEQ, OSM and the Secretary

As described below, the proposed paragraph B would consist of four subparagraphs delineating the responsibilities of DEQ, OSM and the Secretary relating to the review of the PAP or application for transfer, assignment or sale of permit rights, and coordination procedures between DEQ and OSM before and after DEQ's approval of a permit.

The provision in existing paragraph B.1 that State Lands shall assume responsibility for the analysis and review of applications required by 30 CFR 741.13 for surface coal mining and reclamation permits on Federal lands in Montana, would be revised by deleting reference to an obsolete regulation at 30 CFR 741.13. The revised language would be moved, without any changes in its meaning, to proposed subparagraph B.1.a(2) in order to keep this provision in a logical sequence and under the appropriate subparagraph heading. The requirement in existing paragraph B.1 that the Secretary shall, as requested, assist the State through the Regional Director in the analysis and review of applications, would be changed to provide that OSM would review the appropriate portions of applications. The revised language would be moved and included as subparagraph a(2) of proposed paragraph B.2 where other responsibilities of OSM are described. The remaining provision in existing paragraph B.1 stating that the Secretary shall, in addition, evaluate the State's analysis and conclusions as necessary to independently determine whether the Secretary concurs in the State's decision, would be deleted. Such Secretarial concurrence would be duplication of effort and hence, would not be necessary if, as proposed in this agreement (see proposed subparagraph C.1), DEQ assumes the responsibility to make a decision on approval, conditional approval, or disapproval of the permit application component of the PAP or application for transfer, assignment or sale of permit rights.

Thus, the proposed paragraph B.1 which describes the responsibilities of DEQ, would incorporate some of the provisions of existing paragraph B.1 as described above, also of existing paragraphs B.2, B.7 of Article V, and of paragraph B of existing Article VIII as discussed below. In addition, the following new requirements would be included in the proposed paragraph B.1. The first new requirement in proposed subparagraph B.1.a(3) would make DEQ responsible to obtain the requests from Federal agencies with jurisdiction or responsibility over Federal lands for additional information, comments and findings. This requirement is necessary to provide Federal agencies the full opportunity to communicate to DEQ their concerns and comments before DEQ approves a permit. The second new provision in proposed subparagraph B.1.a(4) would require DEQ to obtain OSM's determination whether or not the PAP involving leased Federal coal would require a mining plan modification under 30 CFR 746.18 and informing the applicant of such determination. This provision would ensure that the applicant, in addition to obtaining a DEQ permit, would also need to get a mining plan approval from the Secretary as required by the Mineral Leasing Act, and regulations at 30 CFR 746.11. Proposed subparagraph a(5) would require DEQ to consult with and obtain the consent, as necessary, of Federal land management agency would respect to post-mining land use and to any special requirements to protect non-coal resources. This new responsibility would be delegated to DEQ as provided in 30 CFR 740.4(c)(2). Proposed subparagraph a(6) would be added to delegate to DEQ the responsibility to consult with and obtain consent, as necessary, of the Bureau of Land Management (BLM) with respect to requirements relating to the development, production and recovery of mineral resources on lands that may

be affected by coal mining operations involving leased Federal coal, as authorized by 30 CFR 740.4(c)(3). Proposed subparagraph a(7) would provide for delegation to DEQ the responsibilities of approval and release of performance bonds with the concurrence of OSM, and approval and maintenance of liability insurance as authorized by 30 CFR 740.49(c)(4). Another new requirement in proposed subparagraph a(8) would delegate to DEQ the responsibility to review and approve exploration operations that are not subject to the requirements of 43 CFR Group 3400, as provided in 30 CFR 740.4(c)(6).

Proposed new subparagraph B.1.b(2) would require DEQ to prepare a State decision document in cases when a mining plan action would need to be taken by the Secretary. This decision document is one of the documents that comprises the mining plan decision document and serves the basis for OSM's recommendation to the Secretary for an action on a mining plan.

The provision in existing paragraph B.2 that State Lands will be the primary contact for operators regarding the processing of mining plans and permit applications, would be revised to make, in addition to those already mentioned, a number of corrections to conform to the current regulations. The word ''applicant'' would be used in place of the word ''operators'' to more accurately define the person submitting the PAP. The revised language would be moved to proposed subparagraph B.1.a(1) so that this provision is in a logical sequence and under the appropriate subparagraph heading without making any change in its intent.

The requirement of existing paragraph B.2 regarding State Lands being responsible for informing the applicant of all joint State-Federal determinations would be moved to the proposed paragraph C.4 of this article in order to keep this provision under the appropriate subject heading. However, the phrase ''joint State-Federal determinations'' would be deleted because DEQ would assume the primary responsibility to make determinations on approval or disapproval of permits.

The provision in existing paragraph B.2 requiring that State Lands shall send a copy of all correspondence with the applicant and any information received from the applicant which may have a bearing on decisions regarding the mine plan and permit application to the Regional Director, and the provision that requires OSM to send to the State a copy of all independent correspondence with the applicant that may have a bearing on decisions regarding the mining plan and permit application, would be modified and moved to subparagraph B.4.d where coordination responsibilities of OSM and DEQ are described.

The provision in existing paragraph B.2 stating, ''Except in exigent circumstances, OSM will not independently initiate contacts with applicants regarding completeness or deficiencies of plans and applications with respect to matters which are properly within the jurisdiction of State Lands'', would be moved to proposed subparagraph B.4.a. No change in the meaning is intended.

The existing paragraph B.2 provides that the Secretary shall reserve the right to act independently of the State to carry out his responsibilities under laws other than the Federal Act and in instances of disagreement under the Federal Act, would be moved to subparagraph B.3.b where other responsibilities and rights of the Secretary are listed.

The proposed paragraph B.2, which describes the responsibilities of OSM, would incorporate the appropriate requirements of existing paragraphs B.1, B.4, B.5, B.7, and B.8. In addition, this paragraph would include four new provisions required by Federal regulations. The first new provision would be proposed subparagraph B.2.a(3), that would require OSM to consult with the Federal land management agency to determine whether the PAP constitutes a mining plan modification, and to inform DEQ of such determination within 30 days of receiving a copy of the PAP. This provision is required to comply with 30 CFR 746.18(c)(1). The second new provision, proposed subparagraph B.2.b(1), would be included to comply with the requirements of 30 CFR 746.13(e). Proposed subparagraph B.2.b(1) would require OSM to consult with and obtain the concurrences of BLM, and the Federal land management agency, or any other Federal agency, as necessary, prior to recommending to the Secretary to approve or disapprove the mining plan. The third new proposed subparagraph B.2.b(2) would address the situations that may arise when DEQ would be unable to include in the permit certain conditions that other Federal agencies may require to assure compliance with Federal laws other than SMCRA. In order to assure compliance with 30 CFR 740.13(c)(1), proposed paragraph C in subparagraph 2 would require DEQ to consider the comments of Federal agencies and, to the extent allowed by Montana law, include in the permit, terms and conditions imposed by the Federal law management agency or any other Federal agency with any interest in the proposed project. Montana is concerned that 30 CFR 740.13(c)(1) appears to require the State to include and enforce conditions required by other Federal laws. The State has pointed out that it lacks the authority to enforce other Federal laws and regulations.

The proposed amendments to the Cooperative Agreement do not require nor authorize the State of Montana to enforce Federal laws other than SMCRA. However, the State will enforce its own permits, including those permit conditions required under 30 CFR 740.13(c)(1). The State must consider the comments of Federal agencies in the context of permit issuance and must document these comments in the record of permit decisions. After considering the comments and proposed conditions of Federal agencies, the State may adopt the recommended conditions. If the State does not incorporate a permit condition proposed pursuant to other Federal laws and regulations, the State will document why the condition was not accepted and transmit the documentation to OSM. OSM may agree with the State that the condition is not necessary. When OSM believes the proposed conditions are necessary, it has a variety of options to consider to improve those conditions:

(1) OSM may work with the Federal land management agency to find another means to resolve the issue.

(2) Those conditions associated with Federal laws other than SMCRA could be included as part of the mining plan approval, surface use permit, or other Federal authorization.

(3) In rare instances where no other Federal authorizations would be required, OSM will, after consulting with other Federal agencies as required by the Cooperative Agreement, issue a supplemental SMCRA permit attaching only those conditions which are necessary to assure compliance with other Federal laws. The State shall not be required to enforce the conditions of the Federal permit.

The fourth new proposed subparagraph B.2.b(3) would provide for OSM to be responsible for providing a mining plan decision document to the Secretary recommending approval, disapproval, or conditional approval of mining plans or modifications thereof. This new provision is needed to assure compliance with 30 CFR 740.4(b) and 746.13.

The gist of the first sentence of existing paragraph B.3 making the Regional Director responsible to ensure that any information OSM receives concerning the application is sent to

State Lands, would be contained in proposed subparagraph B.4.d where other coordination responsibilities of OSM and DEQ are described. The requirement of the second sentence of existing paragraph B.3 would be moved to proposed subparagraph B.4.b where other responsibilities of OSM and DEQ regarding coordination are described.

Proposed paragraph B.3, which delineates the responsibilities of the Secretary, in addition to incorporating in proposed subparagraph B.3.b the requirements of existing paragraph B.2 as discussed above, would also include two new subparagraphs. The first proposed subparagraph B.3.a would be added to provide for the Secretary to concurrently carry out the non-delegable responsibilities listed in 30 CFR 745.13. This is necessary to expedite the mining plan approval process such that the Secretary simultaneously carries out his responsibilities without waiting for the State to complete its actions. The second proposed subparagraph B.3.c would be added to implement 30 CFR 740.4(a) which requires the Secretary to be responsible for approval, disapproval, or conditional approval of a mining plan action pursuant to the Mineral Leasing Act of 1920.

The provision in existing paragraph B.4 making the Regional Director responsible for obtaining, on a timely basis, the views of all Federal agencies with jurisdiction or responsibility over a mine plan or permit application on Federal lands in Montana and for making these views known to State Lands, would be revised. The proposed amendments to the Agreement would delegate this responsibility to DEQ as provided in proposed subparagraphs B.1.a(3). This delegation is permissible under 30 CFR 740.4(c). But as provided in subparagraph B.2.a(5)(b), OSM may also assist DEQ, if requested, in obtaining comments and findings of other Federal agencies. Another provision in existing paragraph B.4 requiring State Lands to keep the Regional Director informed of findings during the review which bear on the responsibilities of other Federal agencies, would be included in proposed subparagraph B.4. after making appropriate modifications regarding the name of the State regulatory agency. Another provision of existing paragraph B.4 requiring the Regional Director to take appropriate steps to facilitate discussions between State Lands and the concerned agencies wherever desirable to resolve issues or problems, would be included in the proposed subparagraphs B.2a(5)(a) and B.2.a(5)(c), where other OSM responsibilities are listed, without making any change in its meaning.

As discussed above and in the following paragraph B.5, the proposed paragraph B.4 would incorporate some of the provisions of existing paragraphs B.2, B.3, B.4, and B.5. In addition, five new subparagraphs would be added to comply with the Federal regulations that were promulgated subsequent to the date the existing Agreement became effective. The first proposed subparagraph B.4.c would provide for OSM and DEQ to coordinate with each other for scheduling a meeting with the applicant. This is necessary to enhance communications between the two agencies as they interact with the applicant, as well as to minimize duplication of communications with the applicant. The second proposed subparagraph B.4.e would be added to comply with the provisions of 30 CFR 745.12(g)(1) that requires DEQ to allow OSM access to files relating to coal mining operations on Federal lands. This is necessary to safeguard the interests of the Federal government. The third proposed subparagraph B.4.g would be added to ensure compliance with the provisions of 30 CFR 740.4 (c) and (d) relating to coordination between BLM and DEQ on matters relating to regulations at 43 CFR Group 3400. The fourth proposed subparagraph B.4.h would allow OSM and DEQ to develop working agreements specifying any delegable responsibilities of other Federal laws and regulations which may be delegated to DEQ without amendment to the Agreement. This provision recognizes that in the interest of reducing duplication in the review of permit application packages (PAPs), DEQ may assume certain responsibilities that are fully or partially delegable that would otherwise be performed by OSM. For example, a working agreement may specify how DEQ can assist the Secretary in meeting his responsibilities under the National Environmental Policy Act (NEPA). It is possible for DEQ to perform much of the basic research and analysis required for the Secretary to meet his NEPA responsibilities, although the Secretary will assume full responsibility for ensuring compliance with NEPA. Joint preparation of NEPA documents is an authorized means of achieving that compliance and is consistent with 30 CFR 740.4(c)(7). The fifth new provision in proposed subparagraph B.4.i provides that when valid existing rights (VER) are determined to exist on Federal lands under section 522(e)(3) of SMCRA and the proposed operation will adversely affect either a publicly-owned park or a historic place listed on the National Register of Historic Places (NRHP), DEQ would work with the agency that has jurisdiction over the publicly-owned park, or with the agency that has jurisdiction over the historic place, to develop mutually acceptable terms and conditions for incorporation into the permit to mitigate adverse impacts.

In existing paragraph B.5, the Regional Director is required to begin a review of a mining plan and permit application for apparent completeness. As provided in 30 CFR 740.4(c)(1), this requirement would be revised to delegate the responsibility to DEQ and moved to proposed subparagraphs B.1.a(2) where other DEQ responsibilities are described, and to proposed subparagraph B.2.a(5)(d) OSM's responsibilities to assist DEQ are described. The provision in paragraph B.5 requiring State Lands to inform the Regional Director where OSM assistance will be needed to perform any specific or general analysis or prepare any studies or similar work, would be paraphrased and included in proposed subparagraph B.2.a(5)(e). The remaining provisions of existing paragraph B.5, would be modified to make editorial changes and would be included in proposed subparagraph B.4.f.

The requirements of existing paragraph B.6 providing for joint public meetings and hearings on permit decisions, would be deleted because all permit decisions would be made by DEQ under the amended cooperative agreement.

The requirements of existing paragraph B.7 relating to the preparation of an environmental impact statement and/or environmental assessment to comply with NEPA and the Montana Environmental Policy Act (MEPA) would remain the same and would be included in proposed subparagraph B.1.b(1) where all other responsibilities of DEQ are described. In addition, the gist of the last sentence of existing paragraph B.7 relating to independent evaluation and approval of a NEPA compliance documents would be included as proposed subparagraph B.2.a(1).

Existing paragraph B.8 would be revised significantly relating to the preparation of a technical analysis, environmental analysis, and proposed written decision on the mining plan and permit application review, independent evaluation of these documents, written concurrence by the Regional Director, and the requirement that ''State Lands shall consider the comments of the Regional Director and send a final technical analysis, environmental analysis, and proposed decision to the

Regional Director for his written concurrence. The Regional Director shall have 30 days to act after receipt of State Lands' final technical analysis, environmental analysis, and proposed decision. If no further changes are required, the Regional Director shall proceed in accordance with 30 CFR 741.21.'' The regulation at 30 CFR 741.21(a)(2), and now superseded by current regulation, was promulgated on March 13, 1979 and required that ''(t)he Director approve, or deny all applications for permits under the Federal lands program. .*.*.'' (44 FR 15335, March 13, 1979). In accordance with the Circuit Court of Appeals decision (*National Wildlife Federation vs. Donald Hodel*, 839 F.2d 694 (D.C. Cir. 1988)) that upheld OSM's 1983 Federal program regulations (48 FR 6936, February 16, 1983), OSM is not required to issue permits under the Federal lands program in States that have a State-Federal cooperative agreement. However, due to the above language in paragraph B.8 of existing Article V, OSM has continued to issue Federal permits in Montana under the Federal lands program. It is the intent of these proposed amendments that OSM would not issue Federal permits in Montana under the Federal lands program.

Therefore, in accordance with regulations at 30 CFR 740.4(c)(1), OSM would delegate to DEQ the responsibility to make a decision on approval, disapproval, or conditional approval of the permit application component of the PAP as provided in proposed paragraph C.1 of Article VI. The existing requirement that ''the Regional Director shall have 30 days to act after receipt of State Lands' final technical analysis, environmental analysis, and proposed decision'', has been included in proposed subparagraph B.2.a(4) after making two modifications. First, the existing requirement for ''the Regional Director to act on State Lands' technical analysis, environmental analysis and proposed decision'' has been replaced by the catchall phrase ''exercising its responsibilities''. Two, the ''30-day'' time limit has been replaced by the phrase ''timely manner governed, to the extent possible, by the deadlines established in the State Program''. As stated above DEQ would have the responsibility to make a decision on approval, disapproval, or conditional approval of the permit application component of the PAP, and OSM would not need to act on DEQ's final technical analysis, environmental analysis, and proposed decision. Further, due to dwindling staff resources adherence to strict time limits could be very difficult.

The provisions in existing paragraph B.9 refer to sections of obsolete regulations at 30 CFR 741.16, 741.17 and 741.21, and hence would be deleted.

Approval of the PAP or Application for Transfer, Assignment or Sale of Permit Rights

Proposed paragraph C would be titled *Approval of the PAP or Application for Transfer, Assignment or Sale of Permit Rights.* As discussed earlier subparagraph C.1 would provide that DEQ shall make a decision on approval, conditional approval or disapproval of the permit application component of the PAP or application for transfer, assignment or sale of permit rights on Federal lands as authorized by 30 CFR 740.4(c)(1). Proposed subparagraph C.2 would require DEQ to consider the comments of the Federal agencies and, to the extent allowed by the State Act, incorporate in the permit any terms or conditions imposed by the Federal land management agency pursuant to applicable Federal laws and regulations as required by 30 CFR 740.13(c)(1). Proposed subparagraph C.3 would provide that when a mining plan is required to be approved by the Secretary, DEQ may make a decision on the permit application component of the PAP on Federal lands prior to the necessary Secretarial decision on the mining plan, provided that DEQ advises the applicant that Secretarial approval of the mining plan must be obtained before the applicant may conduct surface coal mining and reclamation operations on the Federal lands. This provision would serve two purposes. One, it would enable DEQ to issue a State permit within time limits dictated by the State program, and two, it would inform the applicant that a mining plan approval from the Secretary must be obtained, when necessary, prior to commencing certain coal mining operations. Finally, to bring the permitting process to conclusion and close the communication loop, proposed subparagraph C.4 would require that after DEQ has made a decision on the permit application component of the PAP, DEQ shall send a copy of the signed permit form and State decision document to the applicant, OSM, the Federal land management agency and, when necessary, to the agency with jurisdiction over a publicly-owned park or historic property listed in the NRHP that would be adversely affected by the surface coal mining and reclamation operations.

Existing Article VI: Inspections

Proposed Revised Article VII: Inspections

This article would be renumbered as *Article VII: Inspections* to correspond to the revised numbering of preceding articles. Existing paragraphs A, B, C, D, and E would be reorganized and revised to delete references to OSM's organizational structure that is no longer in use, and obsolete regulations. In order to increase clarity, existing paragraph F would be moved under proposed *Article VIII: Enforcement* to become paragraph E. No change in the meaning is intended.

Existing Article VII: Enforcement

Proposed Revised Article VIII: Enforcement

This article would be renumbered as *Article VIII: Enforcement* to correspond to the revised numbering of preceding articles. Changes in the language are for clarification purposes only, and also to ensure consistency with other cooperative agreements.

Existing paragraph A would be revised to include references to 30 CFR Part 740, to replace ''State Lands'' with ''DEQ'', and to add that enforcement authority given to the Secretary under other Federal laws and Executive Orders, including but not limited to those listed in Appendix A, is reserved to the Secretary. No change in its meaning is intended.

Existing paragraph B would essentially remain the same except for few word changes for clarification purposes.

In order to comply with revised Federal regulations a new paragraph C would be added to provide that during any inspection made solely by OSM or during any joint inspection where DEQ and OSM fail to agree regarding the propriety of any particular enforcement action, OSM may take any enforcement action necessary to comply with 30 CFR parts 842, 843, 845 and 846.

Existing paragraph C would be renumbered D but would retain the same provisions. As mentioned above a proposed paragraph E would be added to incorporate the language of existing paragraph F of *Article VI: Inspections.*

Existing paragraph D would be renumbered F, without making any change in its meaning.

Existing Article VIII: Bonds

Proposed Revised Article IX: Bonds

This article would be renumbered as *Article IX: Bonds* to correspond to the revised numbering of preceding articles.

Existing paragraph A would be revised to delete reference to the Regional Director because of organizational changes in OSM. Addition of the new word ''performance'' in front of the word ''bond'' is necessary to conform to the regulatory language. The phrase ''jointly payable to both the United States and DEQ'', and the sentence ''such bond shall provide that if this Agreement is terminated under the provisions of 30 CFR 745.15, the portion of the bond covering the Federal lands shall be payable only to the United States'' would be added to ensure conformance with the provisions of Federal lands program regulations at 30 CFR 740.15(b).

Existing paragraph B would be expanded to provide DEQ with the primary responsibility for approval and release of performance bonds. The revised paragraph B would require OSM concurrence in the release by DEQ of a performance bond on lands subject to an approved mining plan. However, prior to such concurrence, OSM shall coordinate with other Federal agencies that have authority over the lands involved. This requirement would ensure the protection of interests of all Federal agencies. DEQ would also be required to annually advise OSM of adjustments to the performance bond as provided in the existing paragraph B.

Proposed paragraph C would be added to safeguard the interests of the U.S. government, and provide that performance bonds will be subject to forfeiture with the concurrence of OSM, in conformance with the requirement of the State program, and OSM may not withhold its concurrence unless DEQ's forfeiture decision is not in accordance with the requirements and procedures of the State program.

Proposed paragraph D would be added to ensure consistency with other cooperative agreements. This paragraph would seek to remind the applicant, OSM, and DEQ that submission of a performance bond does not satisfy the requirements of a Federal lease bond required by 43 CFR 3474, or the requirements of a Federal lessee protection bond pursuant to section 715 of SMCRA. Distinct from the performance bond, the Federal lease bond, made payable to the United States through BLM, is required to be posted by the applicant for a coal lease to assure compliance with the terms and conditions of a Federal coal lease, whereas the Federal lessee protection bond, made payable to the United States or the State, whichever is applicable, is required to be posted by the applicant for a coal mine and reclamation permit for use and benefit of a permittee or lessee of surface lands to secure payment of any damages to crops or tangible improvements on Federal lands.

Existing Article IX: Designation of Lands as Unsuitable

Proposed Revised Article X: Designating Land Areas Unsuitable for All or Certain Types of Surface Coal Mining and Reclamation Operations and Activities, and Valid Existing Rights and Compatibility Determinations

This article would be renumbered and retitled as *Article X: Designating Land Areas Unsuitable for All or Certain Types of Surface Coal Mining and Reclamation Operations and Activities, and Valid Existing Rights and Compatibility Determinations.* The change in numbering would ensure conformance with the revised numbering of preceding articles. The change in article heading would reflect expansion in the subject matter to incorporate regulatory requirements that have been promulgated over the years since the execution of the existing cooperative agreement. Proposed article X would consist of two paragraphs.

Unsuitability Petitions

Existing paragraph A would be redesignated *A. Unsuitability Petitions,* and would include two proposed subparagraphs.

Proposed subparagraph A.1 would include the opening language from existing paragraph B stating that the authority to designate Federal lands as unsuitable for mining, would be reserved to the Secretary. The language in the second sentence of existing paragraph B would be modified and included in proposed subparagraph A.1. The modified language would state that unsuitability petitions would be filed with OSM and would be processed in accordance with 30 CFR 769.

Proposed subparagraph A.2 would include the existing requirements of paragraph A regarding cooperation between OSM and DEQ in processing petitions to designate lands as unsuitable for mining. During processing of such petitions, OSM would also be required to coordinate with, and solicit comments from the appropriate Federal land management agency.

Valid Existing Rights (VER) and Compatibility Determinations

Existing paragraph B would be redesignated *B. Valid Existing Rights (VER) and Compatibility Determinations.*

As stated above the provisions of existing paragraph B would be incorporated in subparagraph A.1. Proposed paragraph B would include five proposed subparagraphs that would describe roles and responsibilities of OSM and DEQ in VER and compatibility determinations for coal mining operations pursuant to the requirements of section 522(e) of SMCRA.

Proposed subparagraph B.1 would provide that the Secretary will make the VER determination for Federal lands within the boundaries of areas specified under section 522(e)(1) of SMCRA. For coal mining operations conducted both on Federal and non-Federal lands, the Secretary will make the VER determinations for the Federal lands and DEQ will make such determinations for the State and private lands.

Subparagraph B.2 would provide that the Secretary will make VER determinations for Federal lands within the boundaries of any area specified in section 522(e)(2), and OSM will process requests for determination of compatibility for these areas.

Subparagraph B.3 would provide that DEQ will make the VER determination for the publicly-owned park or places included in the National Register of Historic Places (NRHP) protected under section 522(e)(3) of SMCRA; DEQ will consult with the State Historic Preservation Officer to determine if the proposed operation will adversely affect any publicly-owned park or place listed on the NRHP. This subparagraph would also provide that surface coal mining and reclamation operations may be permitted on Federal lands protected under section 522(e)(3) of SMCRA if jointly approved by DEQ, and the Federal, State, or local agency with jurisdiction over the publicly-owned park or the historic place, and DEQ will coordinate with these agencies for developing mutually acceptable permit conditions to mitigate environmental impacts on such park and place.

Subparagraph B.4 would provide that DEQ will make the VER determination, on Federal lands for all areas specified in section 522(e) (4) and (5) of SMCRA as unsuitable for mining.

Subparagraph B.5 summarizes that whenever DEQ will make VER determinations for Federal lands, DEQ will consult with OSM and the appropriate Federal agency.

Existing Articles X through XII would be renumbered as proposed Articles XI through XIII. The word ''cooperative'' before the word ''agreement'', however, would be deleted from the heading of each Article in conformance with the introductory language preceding Article I. No substantive changes are proposed.

Existing Article XIII: Changes in State or Federal Standards

Proposed Revised Article XIV: Changes in State or Federal Standards

Article XIII would be renumbered to read *Article XIV: Changes in State or Federal Standards*. It would include two paragraphs that would include revisions in existing language to increase clarity and to add relevant statutory and regulatory cites.

Existing Article XIV: Changes in Personnel and Organization

Proposed Revised Article XV: Changes in Personnel and Organization

Article XIV would be renumbered to read: *Article XV: Changes in Personnel and Organization*. Paragraph A of this Article would include the language of existing Article XIV but would be revised to make minor editorial changes to increase clarity. The new paragraph B would be added to obviate the need for changes to this agreement in the event of any changes in the State Act that may transfer administration of this Agreement to another State agency. In that event, all references to DEQ in this agreement would apply to that agency.

Existing Article XV: Reservation of Rights

Proposed Revised Article XVI: Reservation of Rights

Article XV would be renumbered to read: *Article XVI: Reservation of Rights*. Existing language would be revised to make minor editorial changes to delete references to several statutes without changing its meaning.

Article XVI: Definitions would be renumbered as proposed *Article III: Definitions* and would be revised to include additional 30 CFR references.

III. Procedural Determinations

1. Executive Order 12866

This proposed rule is exempt from review by the Office of Management and Budget (OMB) Executive Order 12866 (Regulatory Planning and Review).

2. Executive Order 12988

The Department of the Interior has conducted the reviews required by section 3 of Executive Order 12988 (Civil Justice Reform) and has determined that this rule meets the applicable standards of subsections (a) and (b) of that section. However, these standards are not applicable to the actual language of State regulatory programs and program amendments since each such program is drafted and promulgated by a specific State, not by OSM. Under sections 503 and 505 of SMCRA (30 U.S.C. 1253 and 1255) and the Federal regulations at 30 CFR 730.11, 732.15, and 732.17(h)(10), decisions on proposed State regulatory programs and program amendments submitted by the states must be based solely on a determination of whether the submittal is consistent with SMCRA and its implementing Federal regulations and whether the other requirements of 30 CFR Parts 730, 731, and 732 have been met.

3. National Environmental Policy Act

No environmental impact statement is required for this rule since section 702(d) of SMCRA (30 U.S.C. 1292(d)) provides that agency decisions on proposed State regulatory program provisions do not constitute major Federal actions within the meaning of section 102(2)(C) of the National Environmental Policy Act (42 U.S.C. 4332(2)(C)).

4. Paperwork Reduction Act

This rule does not contain information collection requirements that require approval under the Paperwork Reduction Act (44 U.S.C. 3507 *et seq.*).

5. Regulatory Flexibility Act

The Department of the Interior has determined that this rule will not have a significant economic impact on a substantial number of small entities under the Regulatory Flexibility Act (5 U.S.C. 601 *et. seq.*). The rule would amend the cooperative agreement between the Department of the Interior and the State of Montana for the regulation of surface coal mining and reclamation operations on Federal lands within Montana under the permanent regulatory program. The proposed rulemaking would streamline the permitting process in Montana by delegating to Montana the sole responsibility to issue permits for coal mining and reclamation operations on Federal lands under the Federal lands program regulations, and would eliminate duplicative permitting requirements, thereby increasing governmental efficiency, which is one of the purposes of the cooperative agreement. This amendment would also update the cooperative agreement to reflect current regulations and agency structures.

6. Unfunded Mandates

This rule will not impose a cost of $100 million or more in any given year on any governmental entity or the private sector.

7. Author

The principal author of these proposed regulations is Ranvir Singh, P.E., Western Regional Coordinating Center, 1999 Broadway, Suite 3320, Denver, CO 80202–5733.

List of Subjects in 30 CFR Part 926

Intergovernmental relations, Surface mining, Underground mining.

Dated: January 3, 1997.

Bob Armstrong,

Assistant Secretary, Land and Minerals Management.

For the reasons set out in the preamble, 30 CFR part 926 is proposed to be amended as follows:

PART 926—[AMENDED]

1. The authority citation for Part 926 is revised to read as follows:

Authority: 30 U.S.C. 1201 et seq., Public Law 95–87.

2. Section 926.30 is revised to read as follows:

§ 926.30 State-Federal cooperative agreement.

The Governor of the State of Montana (Governor) and the Secretary of the Department of the Interior (Secretary) enter into a State-Federal Cooperative Agreement (Agreement) to read as follows:

Article I: Authority, Purposes, and Responsible Agencies

A. Authority

This Agreement is authorized by section 523(c) of the Surface Mining Control and Reclamation Act (SMCRA), 30 U.S.C. § 1273(c), which allows a State with a permanent regulatory program approved by the Secretary, under 30 U.S.C. 1253, to elect to enter into an agreement for State control and regulation of surface coal mining and reclamation operations on Federal lands. This Agreement provides for State regulation of coal exploration operations [1] not subject to 43 CFR Group 3400, and surface coal mining and reclamation operations and activities in Montana on Federal lands consistent with SMCRA, the Federal lands program (30 CFR Chapter VII, Subchapter D), and the Montana State Program (State Program), including among other things, the Montana Strip and Underground Mine Reclamation Act, Part 2, Chapter 4, Title 82, Montana Code Annotated (State Act or MCA).

B. Purposes

The purposes of the Agreement are to (1) foster State-Federal cooperation in the regulation of surface coal mining and reclamation operations on Federal lands and coal exploration operations not subject to 43 CFR Group 3400; (2) minimize intergovernmental overlap and duplication; and (3) provide effective and uniform

[1] The term ''Exploration operations'' is referred to as ''Prospecting'' in the Montana State Program.

application of the State Program on all non-Indian lands in Montana.

C. Responsible Agencies

The Montana Department of Environmental Quality (DEQ) has, and shall continue to have, authority under State law to administer this Agreement on behalf of the Governor. The Office of Surface Mining Reclamation and Enforcement (OSM) shall administer this Agreement on behalf of the Secretary.

Article II: Effective Date

Upon signing by the Secretary and the Governor, this Agreement will take effect [30 days after final publication as rule making in the Federal Register].[2] This Agreement shall remain in effect until terminated as provided in Article XI.

Article III: Definitions

The terms and phrases used in this Agreement, except the term ''permit application package (PAP),'' will be given the meanings set forth in SMCRA, 30 CFR Parts 700, 701, 740, and 761, and the State Program, including the State Act and the regulations promulgated pursuant to the State Act. Where there is a conflict between the above-referenced State and Federal definitions, the definitions used in the State Program will apply, unless otherwise required by Federal regulation.

The term ''permit application package (PAP),'' for the purposes of this cooperative agreement, means a proposal to conduct surface coal mining and reclamation operations on Federal lands, including an application for a permit, permit revision, permit amendment, or permit renewal, and all information required by SMCRA, the Federal regulations, the State Program, this agreement, and all other applicable laws and regulations, including, with respect to leased Federal coal, the Mineral Leasing Act and its implementing regulations.

Article IV: Applicability

In accordance with the Federal lands program, the laws, regulations, terms and conditions of the State Program are applicable to Federal lands in Montana except as otherwise stated in this Agreement, SMCRA, 30 CFR 740.4, 740.11(a), and 745.13 or other applicable Federal laws, Executive Orders, or regulations.

Article V: Requirements for the Agreement

A. The Governor and the Secretary affirm that they will comply with all provisions of this Agreement.

B. Funds

1. The State shall devote adequate funds to the administration and enforcement on Federal lands in Montana of the requirements contained in the State Program. If the State complies with the terms of this Agreement, and if necessary funds have been appropriated, OSM shall reimburse the State as provided in section 705(c) of SMCRA and 30 CFR 735.16 for the costs associated with carrying out responsibilities under this Agreement. The amount of such funds shall be determined in accordance with the provisions of Chapter 3–10 and Appendix 111 of the Federal Assistance Manual.

2. If DEQ applies for a grant but sufficient funds have not been appropriated to OSM, OSM and DEQ shall promptly meet to decide on appropriate measures that will insure that surface coal mining and reclamation operations on Federal lands in Montana are regulated in accordance with the State Program.

3. Funds provided to DEQ under this Agreement will be adjusted in accordance with the program income provisions of 43 CFR Part 12.

C. Reports and Records

DEQ shall submit annual reports to OSM containing information with respect to its compliance with the terms of this Agreement pursuant to 30 CFR 745.12(d). Upon request, DEQ and OSM shall exchange, except where prohibited by Federal or State law, information developed under this Agreement. OSM shall provide DEQ with a copy of any final evaluation report prepared concerning State administration and enforcement of this Agreement. DEQ comments on the report will be attached before being sent to the Congress or other interested parties.

D. Personnel

DEQ shall maintain the necessary personnel to fully implement this Agreement in accordance with the provisions of SMCRA, the Federal lands program, and the State Program.

E. Equipment and Facilities

DEQ shall assure itself access to equipment, laboratories, and facilities with which all inspections, investigations, studies, tests, and analyses can be performed and which are necessary to carry out the requirements of this Agreement.

F. Permit Application Fees and Civil Penalties

The amount of the fee accompanying an application for a permit to conduct surface coal mining and reclamation operations on Federal lands in Montana shall be determined in accordance with section 82–4–223(1) of MCA, and the applicable provisions of Federal law. All permit fees and civil penalty fines shall be accounted for in accordance with the provisions of 43 CFR Part 12. Permit fees will be considered program income. Civil penalties will not be considered program income. The Financial Status Report submitted pursuant to 30 CFR 735.26 shall include the amount of permit application fees collected and attributable to Federal lands during the State fiscal year.

Article VI: Review and Approval of the PAP or Application for Transfer, Assignment or Sale of Permit Rights

A. Receipt and Distribution of the PAP or Application for Transfer, Assignment or Sale of Permit Rights

1. DEQ shall require an applicant proposing to conduct surface coal mining and reclamation operations on Federal lands to submit to DEQ the appropriate number of copies of a PAP or application for transfer, assignment or sale of permit rights. The PAP or application for transfer, assignment or sale of permit rights shall meet the requirements of 30 CFR Part 740, shall be in the form required by DEQ, and shall contain, at a minimum, the information required by 30 CFR 740.13(b), including:

a. Information necessary for DEQ to make a determination of compliance with the State Program;

b. Any supplemental information required by OSM, the Bureau of Land Management (BLM), and the Federal land management agency. This information shall be appropriate and adequate for OSM and the appropriate Federal agencies to make determinations of compliance with applicable requirements of SMCRA, the Mineral Leasing Act (MLA) of 1920, as amended, the Federal lands program, and other Federal laws, Executive Orders, and regulations which these agencies administer.

2. Except as otherwise agreed in writing by Federal agencies, upon receipt of a PAP or application for transfer, assignment or sale of permit rights, DEQ shall ensure that an appropriate number of copies of the PAP or application for transfer, assignment or sale of permit rights are provided to OSM, the Federal land management agency, and any other appropriate Federal agency.

B. Review of the PAP or Application for Transfer, Assignment or Sale of Permit Rights

1. DEQ is responsible for:

a. As authorized by 30 CFR 740.4(c),

(1) Being the primary point of contact with the applicant regarding the review of the PAP or application for transfer, assignment or sale of permit rights and communications regarding all decisions and determinations with respect to the PAP or application for transfer, assignment or sale of permit rights;

(2) Analysis, review, and approval, conditional approval, or disapproval of the permit application component of the PAP or application for transfer, assignment or sale of permit rights for surface coal mining and reclamation operations on Federal lands in Montana;

(3) Obtaining the comments and findings of Federal agencies with jurisdiction or responsibility over Federal lands affected by the operations proposed in the PAP or application for transfer, assignment or sale of permit rights, unless otherwise agreed in writing by Federal agencies. DEQ shall request such Federal agencies to provide to DEQ their requests for additional information or their findings within 45 days of the receipt of the request;

(4) Obtaining OSM's determination whether the PAP involving leased Federal coal constitutes a mining plan modification under 30 CFR 746.18, and informing the applicant of such determination;

(5) Consulting with and obtaining the consent, as necessary, of the Federal land management agency pursuant to 30 CFR 740.4(c)(2), with respect to post-mining land use and to any special requirements necessary to protect non-coal resources of the areas that will be affected by surface coal mining and reclamation operations;

(6) Consulting with and obtaining the consent, as necessary, of BLM pursuant to 30

[2] See explanation in Article II at 46 FR 20983, April 8, 1981.

CFR 740.4(c)(3), with respect to requirements relating to the development, production and recovery of mineral resources on lands affected by surface coal mining and reclamation operations involving leased Federal coal pursuant to 43 CFR Group 3400;

(7) Approval and release of performance bonds pursuant to Article IX.B, and approval and maintenance of liability insurance;

(8) Review and approval of exploration operations not subject to the requirements of 43 CFR Group 3400, as provided in 30 CFR 740.4(c)(6).

b. In addition, where a mining plan action is required under 30 CFR Part 746, as determined by OSM:

(1) Preparation of documentation to comply with the requirements of the National Environmental Policy Act (NEPA). However, OSM will retain the responsibility for the exceptions in 30 CFR 740.4(c)(7)(i) through (vii). DEQ and OSM shall coordinate and cooperate with each other so that, if possible, one Environmental Assessment or Environmental Impact Statement is produced to comply with NEPA and the Montana Environmental Policy Act (MEPA);

(2) Preparation of a State decision package, which includes written findings indicating that permit application component of the PAP is in compliance with the terms of the State Program, a technical analysis of the PAP, and supporting documentation.

2. OSM is responsible for:

a. When the PAP includes Federal lands,

(1) Making determinations and evaluations for NEPA compliance documents as required by 30 CFR 740.4(c)(7)(i) through (vii);

(2) Reviewing the appropriate portions of the PAP for compliance with the non-delegable responsibilities of the Secretary pursuant to SMCRA and 30 CFR 745.13, and for compliance with the requirements of other Federal laws, Executive Orders, and regulations;

(3) Consulting with the Federal land management agency, and determining whether the PAP constitutes a mining plan modification under 30 CFR 746.18, and informing DEQ, whenever practical within 30 days of receiving a copy of the PAP for operations on Federal lands, of such determination;

(4) Exercising its responsibilities in a timely manner governed, to the extent possible, by the deadlines established in the State Program;

(5) Assisting DEQ, upon request, in carrying out its responsibilities by:

(a) Coordinating resolution of conflicts between DEQ and other Federal agencies in a timely manner;

(b) Obtaining comments and findings of other Federal agencies with jurisdiction or responsibility over Federal lands;

(c) Scheduling joint meetings between DEQ and Federal agencies;

(d) Reviewing and analyzing the PAP, to the extent possible, and providing to DEQ the work product within 50 days of receipt of the State's request for such assistance, unless a different time is agreed upon by OSM and DEQ; and

(e) Providing technical assistance, if available OSM resources allow.

b. In addition, where a mining plan action is required pursuant to 30 CFR Part 746:

(1) Consulting with and obtaining the concurrences of BLM, the Federal land management agency, and any other Federal agency, as necessary, prior to making recommendation to the Secretary concerning approval of the mining plan;

(2) Upon notification from the DEQ that certain permit conditions required by the Federal land management agency are not incorporated in the State permit, OSM will determine whether such conditions are necessary. When OSM believes the conditions are necessary, OSM will work with the Federal land management agency to find another means to resolve the issue and, where appropriate, OSM will facilitate the attachment of conditions to the appropriate Federal authorizations; and

(3) Providing a decision document to the Secretary recommending approval, disapproval, or conditional approval of mining plans or modifications thereof.

3. The Secretary:

a. Shall concurrently carry out his responsibilities that cannot be delegated to DEQ pursuant to SMCRA and 30 CFR 745.13, the Federal lands program, the Mineral Leasing Act (MLA), NEPA, this Agreement, and other applicable Federal laws including, but not limited to, those listed in Appendix A. The Secretary shall carry out these responsibilities in a timely manner and will avoid, to the extent possible, duplication of the responsibilities of the State as set forth in this Agreement and the State Program;

b. Reserves the right to act independently of DEQ to carry out his responsibilities under laws other than SMCRA, and where Federal law permits, to delegate some of the responsibilities to OSM; and

c. Shall be responsible for approval, disapproval, or conditional approval of mining plans and modifications thereof with respect to lands containing leased Federal coal in accordance with 30 CFR 740.4(a)(1).

4. Coordination:

a. As a matter of practice, OSM will not independently initiate contacts with applicants regarding completeness or deficiencies of a PAP or application for transfer, assignment or sale of permit rights with respect to matters covered by the State Program.

b. OSM and DEQ shall coordinate with each other during the review process of a PAP or application for transfer, assignment or sale of permit rights as needed.

c. OSM and DEQ may request and schedule meetings with the applicant with adequate advance notice to each other.

d. DEQ shall keep OSM informed of findings made during the review process which bear on the responsibilities of OSM or other Federal agencies. DEQ shall send to OSM copies of any correspondence with the applicant and any information received from the applicant regarding the PAP or application for transfer, assignment or sale of permit rights. OSM shall send to DEQ copies of all OSM correspondence with the applicant and any other information received from the applicant which may have a bearing on the PAP or application for transfer, assignment or sale of permit rights. Any conflicts or differences of opinions that may develop during the review process should be resolved at the lowest possible staff level.

e. OSM shall have access to DEQ files concerning operations on Federal lands.

f. Where a mining plan action is required pursuant to 30 CFR Part 746, OSM and DEQ shall develop a work plan and schedule for the PAP review and each will designate a project leader. The project leaders will serve as the primary points of contact between OSM and DEQ throughout the review process. Not later than 50 days after receipt of the PAP, unless a different time is agreed upon, OSM shall furnish DEQ with its review comments on the PAP and specify any requirements for additional data. DEQ shall provide OSM all available information that may assist OSM in preparing any findings for the mining plan action.

g. On matters concerned exclusively with regulations under 43 CFR Group 3400, BLM will be the primary contact with the applicant and shall inform DEQ of its actions and provide DEQ with a copy of documentation on all decisions.

h. Responsibilities and decisions which can be delegated to DEQ under applicable Federal laws other than SMCRA may be specified in working agreements between OSM and DEQ, with the concurrence of any Federal agency involved, and without amendment to this Agreement.

i. In the case that valid existing rights (VER) are determined to exist on Federal lands under section 522(e)(3) of SMCRA where the proposed operation will adversely affect either a publicly-owned park, or a historic place listed in the NRHP, DEQ shall work, respectively, with the agency with jurisdiction over the publicly-owned park or the agency with jurisdiction over the historic place, to develop mutually acceptable terms and conditions for incorporation into the permit to mitigate adverse impacts.

C. Approval of the PAP or Application for Transfer, Assignment or Sale of Permit Rights

1. DEQ shall make a decision on approval, conditional approval, or disapproval of permit application component of the PAP or application for transfer, assignment or sale of permit rights on Federal lands.

2. DEQ must consider the comments of Federal agencies in the context of permit issuance and will document these comments in the record of permit decisions. To the extent allowed by Montana law, permits issued by DEQ will include terms and conditions imposed by the Federal land management agency pursuant to applicable Federal laws and regulations other than SMCRA, in accordance with 30 CFR 740.13(c)(1). When Federal agencies recommend permit conditions and these conditions are not adopted by DEQ, DEQ will provide OSM with documentation as to why they were not incorporated as permit conditions.

3. When a mining plan action is required pursuant to 30 CFR part 746, DEQ may make a decision on approval, conditional approval, or disapproval of permit application component of the PAP on Federal lands in accordance with the State Program prior to the necessary Secretarial decision on the mining plan, provided that DEQ advises the applicant that Secretarial approval of the mining plan action must be obtained before the applicant may conduct surface coal

mining and reclamation operations on the Federal lands. To the extent allowed by the State law, DEQ shall reserve the right to amend or rescind any requirements of the permit to conform with any terms or conditions imposed by the Secretary in the approval of the mining plan.

4. After making its decision on the permit application component of the PAP, DEQ shall send a copy of the signed permit form and State decision document to the applicant, OSM, the Federal land management agency, and any agency with jurisdiction over a publicly-owned park, or historic property included in the National Register of Historic Places (NRHP) which would be adversely affected by the surface coal mining and reclamation operations.

Article VII: Inspections

A. DEQ shall conduct inspections on Federal lands in accordance with 30 CFR 740.4(c)(5) and prepare and file inspection reports in accordance with the approved State Program.

B. DEQ shall, subsequent to conducting any inspection on Federal lands, file with OSM's appropriate Field Office an inspection report describing: (1) The general conditions of the lands under the lease, permit, or license; (2) the manner in which the operations are being conducted; and (3) whether the operator is complying with applicable performance standards and reclamation requirements.

C. DEQ will be the point of contact and inspection authority in dealing with the operator concerning operations and compliance with requirements covered by this Agreement, except as described in this Agreement and in the Secretary's regulations. Nothing in this Agreement shall prevent inspections by authorized Federal or State agencies for purposes other than those covered by this Agreement.

D. Authorized representatives of the Secretary may conduct any inspections necessary to comply with 30 CFR Parts 842 and 843, and with the Secretary's obligations under laws other than SMCRA.

E. OSM shall give DEQ reasonable notice of its intent to conduct an inspection in order to provide State inspectors with an opportunity to join in the inspection. When OSM is responding to a citizen complaint supplying adequate proof of an imminent danger to the public health and safety, or a significant imminent environmental harm to land, air, or water resources, pursuant to 30 CFR 842.11(b)(1)(ii)(C), it shall contact DEQ no less than 24 hours prior to the Federal inspection, if practicable, to facilitate a joint Federal/State inspection. All citizen complaints which do not involve an imminent danger to the public health and safety, or a significant imminent environmental harm to land, air, or water resources, must be referred initially to DEQ for action. The Secretary reserves the right to conduct inspections without prior notice to DEQ, if necessary, to carry out his responsibilities under SMCRA.

Article VIII: Enforcement

A. DEQ shall have primary enforcement authority under SMCRA concerning compliance with the requirements of this Agreement and the State Program in accordance with 30 CFR 740.4(c)(5) and 740.17(a)(2). Enforcement authority given to the Secretary under SMCRA, and its implementing regulations, or other Federal laws and Executive Orders, including, but not limited to, those listed in Appendix A, is reserved to the Secretary.

B. During any joint inspection by OSM and DEQ, DEQ will have primary responsibility for enforcement procedures, including issuance of cessation orders and notices of violation. DEQ shall consult with OSM prior to issuance of any decision to suspend, rescind or revoke a permit on Federal lands. DEQ shall notify BLM of any suspension, rescission or revocation of a permit containing leased Federal coal pursuant to 30 CFR 740.13(f)(2).

C. During any inspection made solely by OSM or any joint inspection where DEQ and OSM fail to agree regarding the propriety of any particular enforcement action, OSM may take any enforcement action necessary to comply with 30 CFR Parts 842, 843, 845 and 846.

D. DEQ and OSM shall promptly notify each other of all violations and of all actions taken with respect to such violations.

E. Personnel of DEQ and OSM shall be mutually available to serve as witnesses in enforcement actions taken by either party.

F. This Agreement does not affect or limit the Secretary's authority to enforce violations of Federal laws other than SMCRA.

Article IX: Bonds

A. DEQ and the Secretary shall require all operators on Federal lands to submit a single performance bond jointly payable to both the United States and DEQ. The bond shall be of sufficient amount to cover the operator's responsibilities under SMCRA and the State Program. The bond shall be conditioned upon continued compliance with all requirements of SMCRA, 30 CFR Chapter VII, the State Program, and the permit. Such bond shall provide that if this Agreement is terminated under the provisions of 30 CFR 745.15, the portion of the bond covering the Federal lands shall be payable only to the United States.

B. DEQ will have primary responsibility for the approval and release of performance bonds required for surface coal mining and reclamation operations on Federal lands. However, release of a performance bond on lands subject to an approved mining plan requires the concurrence of OSM as provided in 30 CFR 740.15(d)(3). Prior to such concurrence, OSM shall coordinate with other Federal agencies having the authority over the lands involved. DEQ shall annually advise OSM of adjustments to the performance bond.

C. Performance bonds will be subject to forfeiture with the concurrence of OSM, in accordance with the procedures and requirements of the State Program. OSM may not withhold its concurrence unless DEQ's forfeiture decision is not in accordance with the requirements and procedures of the State program.

D. Submission of a performance bond does not satisfy the requirements for either a Federal lease bond required by 43 CFR Part 3474 or a lessee protection bond which is required in certain circumstances by section 715 of SMCRA.

Article X: Designating Land Areas Unsuitable for All or Certain Types of Surface Coal Mining and Reclamation Operations and Activities, and Valid Existing Rights and Compatibility Determinations

A. Unsuitability Petitions

1. Authority to designate or terminate the designation of areas of Federal lands as unsuitable for mining is reserved to the Secretary. Unsuitability petitions shall be filed with OSM and would be processed in accordance with 30 CFR 769.

2. When either DEQ or OSM receives a petition that could impact adjacent Federal or non-Federal lands pursuant to section 522(c) of SMCRA, the agency receiving the petition will notify the other of receipt of the petition and the anticipated schedule for reaching a decision. OSM shall coordinate with and solicit comments from the applicable Federal land management agency. OSM and DEQ shall fully consider data, information, and recommendations of all agencies.

B. Valid Existing Rights (VER) and Compatibility Determinations

The following actions will be taken when requests for determinations of VER pursuant to section 522(e) of SMCRA, or for determinations of compatibility pursuant to section 522(e)(2) of SMCRA are received:

1. For Federal lands within the boundaries of any areas specified under section 522(e)(1) of SMCRA, Secretary will make the VER determination. If surface coal mining and reclamation operations would be conducted on both Federal and non-Federal lands within such areas, the Secretary will make the VER determination for the Federal lands and DEQ will make the VER determination for State and private lands.

2. For Federal lands within the boundaries of any national forest where proposed surface coal mining and reclamation operations are prohibited or limited by section 522(e)(2) of SMCRA and 30 CFR 761.11(b), the Secretary will make VER determinations. OSM will process requests for determinations of compatibility under section 522(e)(2) of SMCRA and part 30 CFR 761.12(c).

3. Where a VER determination is requested for Federal lands protected under section 522(e)(3), DEQ will make the VER determination. DEQ will determine, in consultation with the State Historic Preservation Officer, whether any proposed operation will adversely affect any publicly-owned park or place listed on the NRHP.

Surface coal mining and reclamation operations of Federal lands protected under section 522(e)(3) of SMCRA may be permitted if approved jointly by DEQ, and the Federal, State, or local agency with jurisdiction over the park or historic place. DEQ will coordinate with any agency with jurisdiction over the publicly-owned park or historic place to develop mutually acceptable terms and conditions for incorporation into the permit in order to mitigate environmental impacts.

4. DEQ will process determinations of VER on Federal lands for all areas limited or

prohibited by section 522(e)(4) and (5) of SMCRA as unsuitable for mining.

5. For operations on Federal lands, whenever DEQ is responsible for making the VER determinations, DEQ will consult with OSM and any affected agency.

Article XI: Termination of the Agreement

This Agreement may be terminated by the Governor or the Secretary under the provisions of 30 CFR 745.15.

Article XII: Reinstatement of the Agreement

If this Agreement has been terminated in whole or part, it may be reinstated under the provisions of 30 CFR 745.16.

Article XIII: Amendments of the Agreement

This Agreement may be amended by mutual agreement of the Governor and the Secretary in accordance with 30 CFR 745.14.

Article XIV: Changes in State or Federal Standards

A. The Secretary or the State may, from time to time, revise and promulgate new or revised performance or reclamation requirements or enforcement and administrative procedures. Each party shall, if it determines it to be necessary to keep this Agreement in force, change or revise its respective laws or regulations or request necessary legislative action. Such changes will be made under the procedures of 30 CFR Part 732 for changes to the State Program and under the procedures of section 501 of SMCRA for changes to the Federal lands program.

B. DEQ and OSM shall provide each other with copies of any changes to their respective laws, rules, regulations, and standards pertaining to the enforcement and administration of this Agreement.

Article XV: Changes in Personnel and Organization

A. DEQ and OSM shall, consistent with 30 CFR Part 745, advise each other of changes in the organization, structure, functions, duties and funds of the offices, departments, divisions, and persons within their organizations which could affect administration and enforcement of this Agreement. Each shall promptly advise the other in writing of changes in key personnel, including the head of a department or division, or changes in the functions or duties of the principal offices of the program. DEQ and OSM shall advise each other in writing of changes in the location of their respective offices, addresses, telephone numbers, as well as changes in the names, addresses, and telephone numbers of their respective personnel.

B. Should the State Act be amended to transfer administration of the State Act to another agency, all references to DEQ in this Agreement shall be deemed to apply to the successor regulatory agency as of the date of transfer. The provisions in this Agreement shall thereafter apply to that agency.

Article XVI: Reservation of Rights

In accordance with 30 CFR 745.13, this Agreement shall not be construed as waiving or preventing the assertion of any rights that have not been expressly addressed in this Agreement that the State or the Secretary may have under laws other than the Act and the State Program, including, but not limited to those listed in Appendix A.

Dated:

Governor of Montana

Dated:

Secretary of the Interior

Appendix A

1. The Federal Land Policy and Management Act, 43 U.S.C. 1701 et seq., and implementing regulations.
2. The Mineral Leasing Act of 1920, 30 U.S.C. 181 et seq., and implementing regulations, including 43 CFR Part 3480.
3. The National Environmental Policy Act of 1969, 42 U.S.C. 4321 et seq., and implementing regulations, including 40 CFR Part 1500.
4. The Endangered Species Act, 16 U.S.C. 1531 et seq., and implementing regulations, including 50 CFR Part 402.
5. The National Historic Preservation Act of 1966, 16 U.S.C. 470 et seq., and implementing regulations, including 36 CFR Part 800.
6. Native American Graves Protection and Repatriation Act, 25 U.S.C. §§ 3001 et seq.
7. The American Indian Religious Freedom Act, 42 U.S.C. 1986 et seq.
8. The Archaeological Resources Protection Act of 1979, 16 U.S.C. 470aa et seq.
9. The Clean Air Act, 42 U.S.C. 7401 et seq., and implementing regulations.
10. The Federal Water Pollution Control Act, 33 U.S.C. 1251 et seq., and implementing regulations.
11. The Resource Conservation and Recovery Act of 1976, 42 U.S.C. 6901 et seq., and implementing regulations.
12. The Reservoir Salvage Act of 1960, amended by the Preservation of Historical and Archaeological Data Act of 1974, 16 U.S.C. 469 et seq.
13. Executive Order 11593 (May 13, 1971), Cultural Resource Inventories on Federal Lands.
14. Executive Order 11988 (May 24, 1977), for flood plain protection.
15. Executive Order 11990 (May 24, 1977), for wetlands protection.
16. Executive Order 12898 (February 11, 1994) for Federal Actions to Address Environmental Justice on Minority Populations and Low Income Populations.
17. The Mineral Leasing Act for Acquired Lands, 30 U.S.C. 351 et seq., and implementing regulations.
18. The Stock Raising Homestead Act of 1916, 43 U.S.C. 291 et seq.
19. The Constitution of the United States.
20. Surface Mining Control and Reclamation Act of 1977, 30 U.S.C. 1201 et seq.
21. 30 CFR Chapter VII.
22. The Constitution of the State of Montana.
23. Montana Strip and Underground Mine Reclamation Act (MSUMRA), Part 2, Chapter 4, Title 82, Montana Code Annotated.
24. Title 26, Chapter 4, Subchapter 3, Administrative Rules of Montana.
25. Montana Environmental Policy Act (MEPA).

[FR Doc. 97–582 Filed 1–9–97; 8:45 am]

BILLING CODE 4310–05–M

ENVIRONMENTAL PROTECTION AGENCY

40 CFR Part 52

[FRL–5674–4]

Calls for State Implementation Plan Revisions for Certain States To Reduce Regional Transport of Ozone

AGENCY: Environmental Protection Agency (EPA).

ACTION: Notice of intent.

SUMMARY: In accordance with section 110(k)(5) and 110(a)(2)(D) of the Clean Air Act (Act), the EPA plans to require States to submit State implementation plan (SIP) measures to ensure that emission reductions are achieved as needed to prevent significant transport of ozone (smog) pollution across State boundaries in the Eastern United States. These precursors include volatile organic compounds (VOC) and oxides of nitrogen (NO_x).

Today's notice announces the Agency's intention to publish a Notice of Proposed Rulemaking in the March 1997 timeframe, with final action scheduled for summer 1997. Ozone has long been recognized, in both clinical and epidemiological research, to affect public health. There is a wide range of ozone-induced health effects, including decreased lung function (primarily in children active outdoors), increased respiratory symptoms (particularly in highly sensitive individuals), hospital admissions and emergency room visits for respiratory causes (among children and adults with pre-existing respiratory disease such as asthma), inflammation of the lung, and possible long-term damage to the lungs. Today's notice announces EPA's intention to conduct the formal process for implementing the regional reductions in ozone precursors that are necessary for areas in the Eastern United States to reach attainment. The Ozone Transport Assessment Group (OTAG) was established approximately 1½ years ago to undertake an assessment of the regional transport problem. The OTAG is a collaborative process conducted by the affected States. The OTAG also includes representatives from EPA and interested members of the public, including environmental groups and industry, to evaluate the ozone transport problem and the development of solutions.

SUPPLEMENTARY INFORMATION:

Availability of Related Information

Documents related to OTAG are available on the Agency's Office of Air Quality Planning and Standards' (OAQPS) Technology Transfer Network (TTN) Bulletin Board System (BBS). The telephone number for the TTN BBS is (919) 541–5742. To access the bulletin board a modem and communications software are necessary. The following parameters on the communications software are required: Data Bits-8; Parity-N; and Stop Bits-1. The documents will be located on the OTAG BBS. If assistance is needed in accessing the system, call the help desk at (919) 541–5384 in Research Triangle Park, NC. Other documents related to OTAG can be downloaded from OTAG's webpage at http://www.epa.gov/oar/otag/otag.html.

I. Background

A. Overview of 1990 Amendments to the Clean Air Act (1990 Amendments)

In 1990, Congress amended the Act to address, among other things, continued nonattainment of the ozone national ambient air quality standard (NAAQS) (Pub. L. 101–549, Nov. 15, 1990, 104 Stat. 2399, codified at 42 U.S.C. 7401–7671q). Several of the provisions added, or revised, by the 1990 Amendments are relevant to today's notice.

The 1990 Amendments divide ozone nonattainment areas into, in general, five classifications based on air quality design value and establish specific requirements, including new attainment dates, for each classification (sections 181–182).

The 1990 Amendments require States containing ozone nonattainment areas classified as serious, severe, or extreme to submit several SIP revisions, including controls to progressively reduce emissions of ozone precursors by 9 percent over each 3-year period from 1996 through the attainment date (the rate-of-progress (ROP), or SIP submittals), under section 182(c)(2)(B);[1] a demonstration of attainment (including air quality modeling) for the nonattainment area (the attainment demonstration), as well as SIP measures containing any additional reductions that may be necessary to attain by the appropriate attainment date under section 182 (c)–(e). These Act provisions established November 15, 1994 as the required date for these SIP submittals.[2] On March 2, 1995, EPA Assistant Administrator for Air and Radiation, Mary D. Nichols, sent a memorandum to EPA Regional Administrators (Memorandum) to provide guidance on an alternative approach to provide States with serious and above ozone nonattainment areas flexibility in their planning efforts for the submittals due November 15, 1994.

The 1990 Amendments reflect general awareness by Congress that in some areas of the country, ozone is not merely a local problem, but rather is a regional problem in that ozone and its precursors can be transported long distances across State lines to combine with ozone and precursors downwind, thereby exacerbating the ozone problems downwind. As a result, section 184 delineates a multistate ozone transport region (OTR) in the Northeast part of the country, establishes the Northeast Ozone Transport Commission (OTC) for the purpose of implementing regionwide controls affecting all areas (including attainment areas) in the OTR, and requires specific controls in that region.

Section 110(a)(2)(D) provides an additional tool for addressing the problem of transport. This provision, which applies by its terms to all SIP's for each pollutant covered by a NAAQS and for all areas regardless of their attainment designation, provides that a SIP must contain provisions preventing its sources from contributing significantly to nonattainment problems downwind. Specifically, this provision states, in relevant part, that the SIP must—

> contain adequate provisions * * * prohibiting * * * any source or other type of emissions activity within the State from emitting any air pollutant in amounts which will—
>
> (I) contribute significantly to nonattainment in, or interfere with maintenance by, any other State with respect to any such [NAAQS], or
>
> (II) interfere with measures required to be included in the applicable implementation plan for any other State * * * to prevent significant deterioration of air quality or to protect visibility. * * *

Section 110(k)(5) provides EPA with a tool for assuring that SIP's include required controls by authorizing EPA to make a finding that a SIP is inadequate to meet an Act requirement, thereby requiring the State to submit, within a specified period, a SIP revision to correct the inadequacy. Specifically, this provision, which may be termed the SIP call provision, provides, in relevant part—

> Whenever the Administrator finds that the applicable implementation plan for any area is substantially inadequate to attain or maintain the relevant [NAAQS], to mitigate adequately the interstate pollutant transport described in section 176A or section 184, or to otherwise comply with any requirement of this Act, the Administrator shall require the State to revise the plan as necessary to correct such inadequacies. The Administrator shall notify the State of the inadequacies, and may establish reasonable deadlines (not to exceed 18 months after the date of such notice) for the submission of such plan revisions.

All of the Act provisions summarized above are described in more detail in EPA's rulemaking notices concerning low emission vehicles (LEV) in the Northeast OTR (OTC LEV), ''Proposed Rulemaking on Ozone Transport Commission; Emission Vehicle Program for the Northeast Ozone Transport Region,'' 59 FR 21720 (April 26, 1994); ''Supplemental Notice of Proposed Rulemaking on Ozone Transport Commission; Emission Vehicle Program for the Northeast Ozone Transport Region,'' 59 FR 48664 (September 22, 1994); ''Final Rule on Ozone Transport Commission; Emission Vehicle Program for the Northeast Ozone Transport Region,'' 60 FR 4712 (January 24, 1995).

B. State Actions and EPA Administrative Policy

Notwithstanding significant efforts, the States generally were not able to meet the November 15, 1994 deadline for the attainment demonstration and other SIP submissions required under section 182(c).

The March 2, 1995 Memorandum recognized the efforts made by States and the remaining difficulties in making the ROP and attainment demonstration SIP submittals. The Memorandum recognized that in general, many States were unable to complete these SIP requirements within the deadlines prescribed by the Act due to circumstances beyond their control. These States were hampered by unavoidable delays in developing the underlying technical information needed for the required SIP submittals. The EPA recognized that development of the necessary technical information, as well as the control measures necessary to achieve the large level of reductions likely to be required, had been particularly difficult for the States affected by ozone transport.

Accordingly, as an administrative remedial matter, the Memorandum

[1] These ozone nonattainment areas, as well as those classified as moderate, were also required to submit, by November 15, 1993, a SIP revision providing for reductions in VOC emissions of 15 percent by November 15, 1996 under section 182(b)(1).

[2] For ozone nonattainment areas classified as moderate, the attainment demonstration was due November 15, 1993 (section 182(b)(1)(A)), except that if the State elected to conduct an urban airshed model, EPA allowed an extension to November 15, 1994.

indicated that EPA would establish new timeframes for SIP submittals. The Memorandum indicated that EPA would divide the required SIP submittals into two phases. The Phase I submittals generally consisted of (i) SIP measures providing for ROP reductions due by the end of 1999 (the first 9 percent of ROP reductions); (ii) a SIP commitment (sometimes referred to as an enforceable commitment) to submit any remaining required ROP reductions on a specified schedule after 1996 (with submission no later than the end of 1999); and (iii) a SIP commitment to submit the attainment demonstration by mid-1997, with submission by no later than the end of 1999 of any additional rules needed to attain. By notice dated July 10, 1996 (61 FR 36292–36295 July 10, 1996), EPA issued findings (July 1996 Findings), and thereby started sanctions clocks, for 10 States and the District of Columbia. The findings were made for nine nonattainment areas in those States under the Act for failure to make complete Phase I ozone SIP submittals as described above.

The Phase II submittals were due at specified times after 1996 and primarily consisted of the remaining ROP SIP measures, the attainment demonstration and additional rules needed to attain, and any regional controls necessary for attainment by all areas in the region. The Memorandum contemplated that regional controls needed for serious areas to reach their 1999 attainment date would be submitted and implemented in a timeframe consistent with that deadline, and that regional controls needed for severe/extreme areas to attain would be submitted by the end of 1999.

In addition, the Memorandum called for a collaborative process among the States in the Eastern half of the country to evaluate and address transport of ozone and its precursors. Subsequently, the OTAG was formed, which includes representatives from States, EPA officials, and interested members of the public, including environmental groups and industry, to provide for an assessment of the transport problem and the development of consensus solutions.

It is becoming increasingly apparent that some of the most highly polluted ozone nonattainment areas will not be able to demonstrate attainment simply through the implementation of control measures within the nonattainment area. In some cases, significant ozone concentration and precursor emission reductions within the upwind air mass being transported into the nonattainment area also appear to be necessary.

C. OTAG Process

The OTAG is organized into a number of subgroups and workgroups. The OTAG's Policy Group provides overall direction to its subgroups for the assessment of ozone formation and transport, as well as the development of controls strategies that will reduce concentrations of ozone and its precursors. The Modeling and Assessment Subgroup addresses issues relating to emissions inventories, monitoring, and modeling. It's goal is to assess ozone transport and its impacts. The Strategies and Controls Subgroup evaluates the availability, effectiveness, and costs of potential national, regional and local air pollution control strategies. The Financial Assessment and Implementation Subgroup addresses funding and budget issues. The Outreach and Communications Subgroup educates and informs the public about OTAG's mission and goals, specifically the environmental benefits of reducing the transport of ozone and its precursors. There are also work groups that address other issues such as trading and market-based incentives, criteria for evaluating strategies and implementation issues.

The OTAG's first meetings were on May 18, 1995, in Reston, Virginia, and June 19, 1995, in Washington, DC. The OTAG has continued to meet regularly since then. The goal of OTAG is to—

> Identify and recommend a strategy to reduce transported ozone and its precursors which, in combination with other measures, will enable attainment and maintenance of the national ambient ozone standard in the OTAG region. A number of criteria will be used to select the strategy including, but not limited to, cost-effectiveness, feasibility, and impacts on ozone levels.[3]

In addition to sensitivity modeling analyses, OTAG is modeling three rounds of strategies in order to have the technical information necessary to make a recommendation to EPA on what is needed to meet the OTAG goal. The first round of modeling was performed during September and October 1996 and provided an initial evaluation of possible OTAG emission reductions. The results from the sensitivity analyses and the first round of strategy runs indicate that NO_X reductions provide benefits across State or multi-state boundaries and local disbenefits in some urban areas. Regionwide VOC reductions provide little benefit on a regional scale but decrease ozone in urban areas, which also may lessen the disbenefits associated with certain NOx controls. The second round is being performed during November and December 1996 and is refining the emission reduction level for the strategies. The third round will be performed during January and February 1997 and will evaluate the geographic applicability of the OTAG strategies.

As indicated in the Memorandum, EPA envisioned that OTAG would complete its work by the end of 1996. The modeling timetable described above goes beyond the original schedule called for in the Memorandum. While EPA believes that the results from the third round of modeling runs are important, the Agency recognizes that the delay, although relatively brief, will result in some further delay in the development of regionwide controls based on the OTAG regional assessment.

In addition, according to the March 2, 1995 memorandum, States must submit, by mid-1997, the Phase II submittals that include a plan for attainment of the ozone NAAQS and any regional controls necessary for attainment by all areas in the region. The policy contemplates that these submittals will take account of the assessment of air quality controls and modeling runs performed by OTAG, as well as recommendations as to control strategies that OTAG may develop.

D. Revised Ozone NAAQS and Interim Implementation Policy

On December 13, 1996, EPA issued a notice of proposed rulemaking to revise the ozone NAAQS (61 FR 65716), as well as set out the Interim Implementation Policy (IIP) (61 FR 65764), which describes the SIP requirements applicable to areas during the period from the promulgation of a revised NAAQS to the creation of the new SIP's required to attain the revised NAAQS. The proposal noted that a standard set at a level of 0.09 ppm would result in approximately equivalent public health protection as that afforded by the current standard; a 0.08 ppm level would provide greater protection. Thus, OTAG control strategies targeted at the reduction of boundary ozone and its precursors would be effective and consistent with any of the proposals for the new NAAQS.

In the proposed IIP, EPA recognized that replacing the existing NAAQS has ramifications for the controls scheme for existing ozone nonattainment areas. For example, the attainment dates for nonattainment areas under the current NAAQS would be replaced by revised attainment dates under the revised NAAQS. Also, the proposed IIP states that nonattainment areas currently classified as serious and higher must continue to meet the same ROP

[3] OTAG Policy Paper approved by the Policy Group on December 4, 1995.

requirements as under the current NAAQS, which are provided by section 182(c)(2)(B), except that if the NAAQS is revised as proposed, areas should submit ROP controls covering only the period up to the time they submit new SIPs to attain the revised NAAQS and not up to their attainment date under the current NAAQS. In addition, if the NAAQS is revised as proposed, areas would not be required to submit attainment demonstrations (including the controls) geared towards the existing NAAQS and attainment dates; rather, they would be required at a future time to submit an attainment demonstration geared to the revised NAAQS.

The IIP further proposes to require States to submit, within 90 days after promulgation of the final ozone NAAQS, a preliminary estimate of the amount of emissions reductions needed for their ozone nonattainment area to attain the revised NAAQS. Finally, the IIP proposes making revisions to the July 1996 Findings consistent with its principles.

II. Notice of Intent To Propose Rulemaking

In this notice, the Agency is announcing its plans to issue SIP calls, under section 110(k)(5) of the Act, as needed to ensure that the necessary regional reductions are achieved that will allow current nonattainment areas to prepare attainment demonstrations for the current NAAQS. This action will reflect the technical work done by OTAG, as well as any OTAG recommendations for adoption of additional NO_X and/or VOC controls. The EPA wants to ensure that the necessary regional reductions would be implemented by the relevant States within a specified timeframe. It is EPA's intention to review the assessments, modeling work, and any recommendations made by OTAG, and to base the SIP call on this review as well as any other information available. In the March 1997 timeframe, EPA intends to publish a Notice of Proposed Rulemaking (NPR). The EPA anticipates that the NPR will propose overall amounts or ranges of NO_X and/or VOC emission reductions that each State would need to achieve to reduce the boundary condition concentrations of ozone and its precursors within a specified timeframe and require the submission of SIP controls to achieve these reductions. The EPA may or may not identify or require specific control measures. The SIP revision must also contain a schedule for adoption and implementation of these measures, and EPA intends to set out this schedule in more detail in the proposed rulemaking. The EPA intends to publish the final SIP call notice in summer 1997.

Under section 110(k)(5) of the Act, EPA has the authority to establish the date by which a State must respond to a SIP call. This date can be no later than 18 months after the SIP call is issued. The EPA believes that it is appropriate for attainment areas to meet the same schedule as nonattainment areas for making SIP submittals. The EPA could thus allow up to 18 months for these submittals. However, EPA is considering a more accelerated schedule for submittals under this SIP call to attain air quality benefits sooner and to facilitate area specific SIP planning. The EPA will be requesting comment on deadlines ranging from 6 months to 18 months following the date of publication of the notice of final rulemaking.

If EPA makes a finding under section 179(a) that the appropriate States have not made the required complete submittals by the date established in the SIP call, EPA plans to provide by rule that the offset sanction identified in section 179(b) will be applied in the affected areas, pursuant to section 179(a) and 40 CFR 52.31. If the States have still not made a complete submission 6 months after the offset sanction is imposed, then the highway funding sanction will apply in the affected nonattainment areas in accordance with 40 CFR 52.31. In addition, section 110(c) provides that EPA promulgate a Federal implementation plan (FIP) no later than 2 years after a finding under section 179(a).

The EPA believes that expedited implementation of regional control strategies to facilitate attainment of the current standard would also be beneficial if the Agency makes a final decision to revise the ozone NAAQS standard. In fact, it is likely that regional reductions in ozone and ozone precursors in upwind States will be even more critical to allow downwind States to attain a revised standard. Regional reductions could also minimize the number of areas designated nonattainment under a revised standard and/or lessen the severity of the nonattainment problem. In addition, as EPA goes through the process of developing an implementation program for the new standard, it will be able to take advantage of the information gathered by OTAG and account for emission reductions that result from the recommended strategy.

The EPA's authority under section 110(k)(5) to issue a SIP call will not be changed by promulgation of a revised NAAQS because the requirements of section 110(a)(2)(D) will not be affected by the revised NAAQS. Under the revised NAAQS, upwind States must continue to demonstrate that their sources do not significantly contribute to nonattainment problems downwind.

Dated: January 6, 1997.

Mary D. Nichols,

Assistant Administrator, Office of Air and Radiation.

[FR Doc. 97–645 Filed 1–9–97; 8:45 am]

BILLING CODE 6560–50–P

FEDERAL COMMUNICATIONS COMMISSION

47 CFR Part 61

[CC Docket No. 93–55; FCC 96–108]

Metric Conversion of Tariff Publications and Supporting Information

AGENCY: Federal Communications Commission.

ACTION: Termination of proposed rulemaking proceeding.

SUMMARY: In a 1993 Notice of Proposed Rulemaking, the Commission sought comment on a proposal to amend Part 61 of its rules to mandate metric conversion of common carrier tariff publications and supporting information (''tariff materials''). The Commission made this proposal to facilitate use of these materials in light of the increased employment of metric units of measurement in this country and Congressional policy that the metric system of measurement be employed wherever possible. Based upon the comments received and its own analysis, the Commission concluded, in this Report and Order, that it would not be in the public interest to require common carriers to convert to the metric system those units of measure appearing in their tariff materials. Specifically, the Commission found that the benefits to carriers and their customers of such mandatory metric conversion—or of requiring that conversion tables be included in such materials—were not clear enough to justify the carrier burdens involved. Accordingly, the Commission declined to adopt any of the proposed conversion options and, instead, terminated this proceeding.

DATES: The proposed rulemaking proceeding is terminated February 10, 1997.

FOR FURTHER INFORMATION CONTACT: Allen A. Barna, Competitive Pricing Division, Common Carrier Bureau, (202) 418–1530.

SUPPLEMENTARY INFORMATION: The Commission opened this docket with the release of a Notice of Proposed Rulemaking: Amendment to Part 61 of the Commission's Rules Requiring Metric Conversion of Tariff Materials and Supporting Information, CC Docket No. 93–55, 10 FCC Rcd 6483 (1993) (1993 NPRM), 58 FR 26087, April 30, 1993. The 1993 NPRM was one of several actions that the Commission took in response to the Metric Conversion Act of 1975, Public Law 94–168, 89 Stat. 1007 (1975), as amended by Public Law 100–418, 102 Stat. 1107 (1988) (codified at 17 U.S.C. § 205 *et seq.*) (Metric Conversion Act). This is a summary of the Commission's later Report and Order in this docket adopted March 12, 1996, and released March 29, 1996, 11 FCC Rcd 3617 (1996) (Report and Order). The full text of this Report and Order is available for inspection and copying during normal business hours in the FCC Public Reference Room (Room 239), 1919 M St., NW., Washington, DC. The complete text of this Report and Order may also be purchased from the Commission's copy contractor, International Transcription Service, Suite 140, 2100 M Street, NW., Washington, DC 20037.

Regulatory Flexibility Analysis

Because the Commission did not impose any of the proposed metric conversion options on common carriers and, instead, simply terminated this proceeding, the Commission has determined that Section 605(b) of the Regulatory Flexibility Act of 1980, 5 U.S.C. 605(b), does not apply to the adoption of this Report and Order because termination of this proceeding does not have any significant economic impact on small entities.

Summary of Report and Order

In the 1993 NPRM, the Commission expressed its belief that distance-sensitive units in tariff filings under Part 61 of its rules should be expressed in metric units. Accordingly, that NPRM proposed three options for conversion of common carrier tariff materials to the metric system. Under Option 1, the Conversion Table Option, carriers would be required to include, in the general rules section of their tariff materials, a table for converting non-metric units of measurement to metric units. Under Option 2, carriers would be required to include—in the applicable rate sections of their tariff materials—the metric unit and corresponding rate in parenthesis beside the non-metric unit and related rate (*e.g.*, $4.00 per mile ($2.50 per kilometer)). Under Option 3, carriers would be required to include only the metric unit and related rate in the applicable rate sections of their tariff materials. To aid tariff users not familiar with the metric system, Option 3 would also require carriers to include appropriate conversion tables in their tariff materials.

Most commenting parties urged the Commission not to adopt any rule requiring metric conversion of common carrier tariff materials. Some parties noted that the Metric Conversion Act does not obligate the Commission to require metric conversion of such materials. A number of parties argued that the anticipated costs for carriers to convert these materials and the related administrative burdens on each carrier to revise tariff materials far outweigh any benefits to those who use these materials.

The National Institute of Standards and Technology at the U.S. Department of Commerce (NIST) recommended that these tariff materials include either (a) the metric unit and corresponding rate followed in parenthesis by the non-metric unit and rate, or (b) the non-metric unit and corresponding rate followed by the metric unit and rate. Thus, NIST would allow carriers to choose which measurement system would be dominant in their tariff materials and which would be included in parenthesis. Should the Commission not adopt that approach, NIST urged that common carriers be required to comply with Option 2 in the 1993 NPRM because, in the view of NIST, that option most closely met the goals of the Metric Conversion Act. In addition, the Chairman of the Standards and Metric Practices Subcommittee of the Metrification Operating Committee of the Interagency Council on Metric Policy urged the Commission to allow carriers to use only metric units in their tariff materials because use of any other option would require carriers to continue to use two sets of units in these materials.

The Commission found that the carrier burdens associated with both Option 2 and Option 3 clearly outweigh the benefits to the public that each offers. Although Option 1, the Conversion Table Option, would be less burdensome than either of the other two options, the Commission found that it, too, would impose additional burdens on carriers. While the Commission recognized that inclusion of such conversion tables in tariff materials would promote its metric conversion program and would potentially benefit some tariff users, the Commission, nevertheless, found that the benefits associated with such a requirement would be outweighed by the estimated burdens on carriers.

Thus, in light of the record established in response to the 1993 NPRM, the Commission no longer found that the benefits of having metric units or metric conversion tables in tariff materials exceeded the related burdens on those carriers that filed these materials. Instead, the Commission found that the benefits to carriers and their customers of converting tariff materials to the metric system—or of including conversion tables in such materials—were not sufficiently clear to justify the burdens involved. Accordingly, the Commission declined to adopt any of the conversion options proposed in the 1993 NPRM and terminated this proceeding.

Ordering Clause

Accordingly, *It is ordered*, that the proceeding initiated in CC Docket No. 93–55 *Is terminated*.

List of Subjects in 47 CFR Part 61

Communications common carriers, Metric system, Telecommunications.

Federal Communications Commission.

LaVera F. Marshall,

Acting Secretary.

[FR Doc. 97–529 Filed 1–9–97; 8:45 am]

BILLING CODE 6712–01–P

DEPARTMENT OF COMMERCE

National Oceanic and Atmospheric Administration

50 CFR Part 648

[I.D. 122396B]

New England Fishery Management Council; Meeting

AGENCY: National Marine Fisheries Service (NMFS), National Oceanic and Atmospheric Administration (NOAA), Commerce.

ACTION: Public meeting.

SUMMARY: The New England Fishery Management Council (Council) will hold a 1-day public meeting to consider actions affecting New England fisheries in the exclusive economic zone.

DATES: The meeting will be held on Tuesday, January 16, 1997, at 9 a.m.

ADDRESSES: The meeting will be held at the Tara Ferncroft Conference and Resort, 50 Ferncroft Road, Danvers, MA 01923; telephone (508) 777–2500. Requests for special accommodations should be addressed to the New England Fishery Management Council, 5 Broadway, Saugus, MA 01906–1097; telephone (617) 231–0422.

FOR FURTHER INFORMATION CONTACT: Christopher B. Kellogg, Acting Executive Director, New England Fishery Management Council, (671) 231–0422.

SUPPLEMENTARY INFORMATION: This 1-day meeting is being held to discuss right whale and groundfish management issues.

Background Information for Abbreviated Rulemaking—Northeast Multispecies

The Council will consider taking action on framework adjustments to the Fishery Management Plan for the Northeast Multispecies Fishery (FMP) under the framework for abbreviated rulemaking procedure contained in 50 CFR 648.90. Initial action will be taken on a framework adjustment to the FMP that would restrict fixed gear in the Great South Channel area to protect right whales in critical habitat during high use periods.

The remainder of the day will be used to consider Framework Adjustment 20, an action that would establish groundfish stock rebuilding measures for the 1997 fishing year. The range of options under consideration include area closures, gear modifications, and possible reductions in days-at-sea allocations. As part of this action, the Council also will discuss effort reduction measures for gillnet vessels, alternatives to the current haddock trip limit, incentives to reduce fishing effort on inshore groundfish stocks, and measures to protect the 1992 year class of winter flounder.

The Council will consider other adjustments that will be submitted as part of Framework Adjustment 20. These concern an exempted fishery for monkfish with 10–inch (25.4 cm) or larger mesh gillnets, an exempted fishery for mussel dredges in Southern New England, and modification of the bycatch allowances in the northern shrimp fishery. Any other outstanding business will be addressed at the end of the day.

The Council will consider public comments at a minimum of 2 Council meetings prior to making any final recommendations to the Regional Administrator, Northeast Region, NMFS, under the provisions for abbreviated rulemaking cited above. If the Regional Administrator concurs with the measures proposed by the Council, he will publish them as a final rule in the Federal Register.

Special Accommodations

This meeting is physically accessible to people with disabilities. Requests for sign language interpretation or other auxiliary aids should be directed to Christopher B. Kellogg (see **ADDRESSES**) at least 5 days prior to the meeting date.

Authority: 16 U.S.C. 1801 *et seq.*

Dated: January 6, 1996.

Bruce Morehead,

Acting Director, Office of Sustainable Fisheries, National Marine Fisheries Service.

[FR Doc. 97–588 Filed 1–9–97; 8:45 am]

BILLING CODE 3510–22–F

Notices

Federal Register
Vol. 62, No. 7
Friday, January 10, 1997

This section of the FEDERAL REGISTER contains documents other than rules or proposed rules that are applicable to the public. Notices of hearings and investigations, committee meetings, agency decisions and rulings, delegations of authority, filing of petitions and applications and agency statements of organization and functions are examples of documents appearing in this section.

DEPARTMENT OF AGRICULTURE

Forest Service

Eastern Washington Cascades Provincial Interagency Executive Committee (PIEC), Advisory Committee

AGENCY: Forest Service, USDA.

ACTION: Notice of meeting.

SUMMARY: The Eastern Washington Cascades PIEC Advisory Committee will meet on January 30, 1997 in Campbell's Conference Center (River Room), 104 W. Wooden, Chelan, Washington. The meeting will begin at 9:00 a.m. and continue until 3:30 p.m. The focus of this meeting will be to discuss grazing management under the Northwest Forest Plan, agency updates on Northwest Forest Plan implementation, and discuss the focus for future advisory committee meetings. All Eastern Washington Cascades Province Advisory Committee meetings are open to the public. Interested citizens are welcome to attend.

FOR FURTHER INFORMATION CONTACT: Direct questions regarding this meeting to Paul Hart, Designated Federal Official, USDA, Wenatchee National Forest, P.O. Box 811, Wenatchee, Washington 98807, 509–662–4335.

Dated: January 6, 1997.

Sonny J. O'Neal,

Forest Supervisor, Wenatchee National Forest.

[FR Doc. 97–586 Filed 1–9–97; 8:45 am]

BILLING CODE 3410–11–M

Yakima Provincial Interagency Executive Committee (PIEC), Advisory Committee

AGENCY: Forest Service, USDA.

ACTION: Notice of meeting.

SUMMARY: The Yakima PIEC Advisory Committee will meet on January 22, 1997 at Cle Elum Ranger Station conference room, 803 W. 2nd Street, Cle Elum, Washington. The meeting will begin at 9:00 a.m. and continue until 3:30 p.m. This meeting will focus on the Adaptive Management Area plan and agency updates on the Northwest Forest Plan implementation. All Yakima Province Advisory Committee meetings are open to the public. Interested citizens are welcome to attend.

FOR FURTHER INFORMATION CONTACT: Direct questions regarding this meeting to Paul Hart, Designated Federal Official, USDA, Wenatchee National Forest, P.O. Box 811, Wenatchee, Washington, 98807, 509–662–4335.

Dated: January 6, 1997.

Sonny J. O'Neal,

Forest Supervisor, Wenatchee National Forest.

[FR Doc. 97–587 Filed 1–9–97; 8:45 am]

BILLING CODE 3410–11–M

COMMITTEE FOR PURCHASE FROM PEOPLE WHO ARE BLIND OR SEVERELY DISABLED

Procurement List Proposed Additions

AGENCY: Committee for Purchase From People Who Are Blind or Severely Disabled

ACTION: Proposed Additions to Procurement List.

SUMMARY: The Committee has received proposals to add to the Procurement List services to be furnished by nonprofit agencies employing persons who are blind or have other severe disabilities.

COMMENTS MUST BE RECEIVED ON OR BEFORE: February 10, 1997.

ADDRESSES: Committee for Purchase From People Who Are Blind or Severely Disabled, Crystal Square 3, Suite 403, 1735 Jefferson Davis Highway, Arlington, Virginia 22202–3461.

FOR FURTHER INFORMATION CONTACT: Beverly Milkman (703) 603–7740.

SUPPLEMENTARY INFORMATION: This notice is published pursuant to 41 U.S.C. 47(a)(2) and 41 CFR 51–2.3. Its purpose is to provide interested persons an opportunity to submit comments on the possible impact of the proposed actions.

If the Committee approves the proposed additions, all entities of the Federal Government (except as otherwise indicated) will be required to procure the services listed below from nonprofit agencies employing persons who are blind or have other severe disabilities.

I certify that the following action will not have a significant impact on a substantial number of small entities. The major factors considered for this certification were:

1. The action will not result in any additional reporting, recordkeeping or other compliance requirements for small entities other than the small organizations that will furnish the services to the Government.

2. The action does not appear to have a severe economic impact on current contractors for the services.

3. The action will result in authorizing small entities to furnish the services to the Government.

4. There are no known regulatory alternatives which would accomplish the objectives of the Javits-Wagner-O'Day Act (41 U.S.C. 46–48c) in connection with the services proposed for addition to the Procurement List.

Comments on this certification are invited. Commenters should identify the statement(s) underlying the certification on which they are providing additional information.

The following services have been proposed for addition to Procurement List for production by the nonprofit agencies listed:

Janitorial/Custodial

Sierra Army Depot, Herlong, California
NPA: Tehama County Opportunity Center, Inc., Red Bluff, California

Janitorial/Custodial

Edward Hines, Jr. VA Hospital, Consolidated Mail Outpatient Pharmacy, Building #37, Hines, Illinois
NPA: Jewish Vocational Service and Employment Center, Chicago, Illinois

Linen Distribution

VA Medical Center, 1900 E. Main Street, Danville, Illinois
NPA: Rehab Products and Services, Inc., Danville, Illinois

Litter Pick-Up

Robins Air Force Base, Georgia
NPA: Family Support Alliance for the Mentally Ill, Inc., Warner Robins, Georgia

Storage and Distribution of Uniform Accessories

(Vendor Parts Accessories)

Defense Personnel Support Center, Philadelphia, Pennsylvania

NPA: Travis Association for the Blind, Austin, Texas.

Beverly L. Milkman,

Executive Director.

[FR Doc. 97–657 Filed 1–9–97; 8:45 am]

BILLING CODE 6353–01–P

Procurement List; Additions

AGENCY: Committee for Purchase From People Who Are Blind or Severely Disabled.

ACTION: Additions to the Procurement List.

SUMMARY: This action adds to the Procurement List commodities and services to be furnished by nonprofit agencies employing persons who are blind or have other severe disabilities.

EFFECTIVE DATE: February 10, 1997.

ADDRESSES: Committee for Purchase From People Who Are Blind or Severely Disabled, Crystal Square 3, Suite 403, 1735 Jefferson Davis Highway, Arlington, Virginia 22202–3461.

FOR FURTHER INFORMATION CONTACT: Beverly Milkman (703) 603–7740.

SUPPLEMENTARY INFORMATION: On June 28, November 8 and 22, 1996, the Committee for Purchase From People Who Are Blind or Severely Disabled published notices (61 FR 33711, 57849 and 59401) of proposed additions to the Procurement List.

After consideration of the material presented to it concerning capability of qualified nonprofit agencies to provide the commodities and services and impact of the additions on the current or most recent contractors, the Committee has determined that the commodities and services listed below are suitable for procurement by the Federal Government under 41 U.S.C. 46–48c and 41 CFR 51–2.4.

I certify that the following action will not have a significant impact on a substantial number of small entities. The major factors considered for this certification were:

1. The action will not result in any additional reporting, recordkeeping or other compliance requirements for small entities other than the small organizations that will furnish the commodities and services to the Government.

2. The action will not have a severe economic impact on current contractors for the commodities and services.

3. The action will result in authorizing small entities to furnish the commodities and services to the Government.

4. There are no known regulatory alternatives which would accomplish the objectives of the Javits-Wagner-O'Day Act (41 U.S.C. 46–48c) in connection with the commodities and services proposed for addition to the Procurement List.

Accordingly, the following commodities and services are hereby added to the Procurement List:

Commodities

Office and Miscellaneous Supplies

(Requirements for Fort McClellan Air Force Base, Alabama)

Services

Administrative Services

Poff Federal Building and Courthouse, 210 Franklin Road, SW, Roanoke, Virginia

Janitorial/Custodial

Naval Command Control & Ocean Surveillance Center, Naval Weapons Station, East Coast Division Complex, Charleston, South Carolina

Operation of Central Issue Facility, Fort Drum, New York

Petroleum Support, Fort Sam Houston/Camp Bullis, Texas

This action does not affect current contracts awarded prior to the effective date of this addition or options that may be exercised under those contracts.

Beverly L. Milkman,

Executive Director.

[FR Doc. 97–658 Filed 1–9–97; 8:45 am]

BILLING CODE 6353–01–P

Procurement List; Addition

AGENCY: Committee for Purchase From People Who Are Blind or Severely Disabled.

ACTION: Addition to the Procurement List.

SUMMARY: This action adds to the Procurement List a service to be furnished by nonprofit agencies employing persons who are blind or have other severe disabilities.

EFFECTIVE DATE: February 10, 1997.

ADDRESSES: Committee for Purchase From People Who Are Blind or Severely Disabled, Crystal Square 3, Suite 403, 1735 Jefferson Davis Highway, Arlington, Virginia 22202–3461.

FOR FURTHER INFORMATION CONTACT: Beverly Milkman (703) 603–7740.

SUPPLEMENTARY INFORMATION: On November 1, 1996, the Committee for Purchase From People Who Are Blind or Severely Disabled published notice (61 F.R. 56511) of proposed addition to the Procurement List. Comments were received from the current contractor for this service. The contractor noted that loss of this service proposed for addition to the Procurement List would leave it with only one source of revenue until it is successful in bidding for other business. However, that single source of revenue which the contractor would retain is responsible, by the contractor's own figures, for over 90 percent of its sales. Consequently, the Committee does not believe that its action in adding to the Procurement List a service which constitutes a very small percentage of the contractor's total sales will have a severe adverse impact on the contractor.

After consideration of the material presented to it concerning capability of qualified nonprofit agencies to provide the service and impact of the addition on the current or most recent contractors, the Committee has determined that the service listed below are suitable for procurement by the Federal Government under 41 U.S.C. 46–48c and 41 CFR 51–2.4.

I certify that the following action will not have a significant impact on a substantial number of small entities. The major factors considered for this certification were:

1. The action will not result in any additional reporting, recordkeeping or other compliance requirements for small entities other than the small organizations that will furnish the service to the Government.

2. The action does not appear to have a severe economic impact on current contractors for the service.

3. The action will result in authorizing small entities to furnish the service to the Government.

4. There are no known regulatory alternatives which would accomplish the objectives of the Javits-Wagner-O'Day Act (41 U.S.C. 46–48c) in connection with the service proposed for addition to the Procurement List.

Accordingly, the following service is hereby added to the Procurement List:

Operation of Postal Service Center

Nellis Air Force Base, Nevada

This action does not affect current contracts awarded prior to the effective date of this addition or options that may be exercised under those contracts.

Beverly L. Milkman,

Executive Director.

[FR Doc. 97–659 Filed 1–9–97; 8:45 am]

BILLING CODE 6353–01–P

Procurement List; Additions

AGENCY: Committee for Purchase From People Who Are Blind or Severely Disabled.

ACTION: Addition to the Procurement List

SUMMARY: This action adds to the Procurement List commodities to be furnished by nonprofit agencies employing persons who are blind or have other severe disabilities.

EFFECTIVE DATE: February 10, 1997.

ADDRESSES: Committee for Purchase From People Who Are Blind or Severely Disabled, Crystal Square 3, Suite 403, 1735 Jefferson Davis Highway, Arlington, Virginia 22202–3461.

FOR FURTHER INFORMATION CONTACT: Beverly Milkman (703) 603–7740.

SUPPLEMENTARY INFORMATION: On October 25, 1996, the Committee for Purchase From People Who Are Blind or Severely Disabled published notice (61 FR 55268) of proposed additions to the Procurement List. Comments were received from the current contractor for the Air Force women's garrison caps. That contractor described its position as precarious and attributed the reductions in its workforce over the past six years to Committee decisions to place several other military caps on its Procurement List. The contractor advised that the addition of the cap to the Procurement List would put an end to its enterprise.

The Committee is aware that substantial reductions in troop strength in all military services in recent years have decreased the requirements for these caps and other types of headgear. In fact, the nonprofit agency that would produce these caps has experienced significant reductions in orders for the Air Force men's caps, which is why it is seeking the additional work represented by the women's caps.

The Committee believes it is primarily the changes in troop strength and the current contractor's failure to secure other Federal and commercial business that have led to the decline in that firm's workforce and sales and not previous actions by the Committee. This belief is supported by the fact that the current annual value of the types of caps made under the JWOD Program that have been made in the past by the current contractor is substantially less than the decline in the current contractor's sales over the past six years.

The Committee also noted that while it has placed the Air Force men's garrison caps and a small portion of the Army men's garrison caps on its Procurement List, the current contractor will continue to have the ability to bid on substantial other Government business. This business includes the vast majority of the Army men's garrison caps, the Army women's garrison caps, and all the Marine and Coast Guard garrison caps. The current contractor will also have the opportunity to continue to bid on all service cap covers. Moreover, the Committee will not be adding any more caps of this type or any service cap covers to the Procurement List for at least five years without the prior approval of the current contractor and another firm that makes these types of caps.

The Committee also noted that the caps in question did not represent a substantial portion of the current contractor's business during the past year and prior to August of 1996 had not been supplied by the current contractor for several years.

Since it has remained in business without sales of this cap or the Air Force men's cap tor three to five years, the firm is not, in the Committee's opinion, dependent on the sales of either cap for its continued survival.

Overall, the Committee has concluded that because of the significant opportunities that will continue to be available to the current contractor to bid on other caps and cap covers and the firm's lack of dependence on this particular item, addition of these caps is not likely to result in an end to the enterprise. However, to give the current contractor additional time to adjust to the market changes, the Committee has decided to permit half of the initial FY 1997 requirement for the caps in question to be procured competitively.

After consideration of the material presented to it concerning capability of qualified nonprofit agencies to provide the commodities and impact of the addition on the current or most recent contractors, the Committee has determined that the commodities listed below are suitable for procurement by the Federal Government under 41 U.S.C. 46–48c and 41 CFR 51–2.4.

I certify that the following action will not have a significant impact on a substantial number of small entities. The major factors considered for this certification were:

1. The action will not result in any additional reporting, recordkeeping or other compliance requirements for small entities other than the small organizations that will furnish the commodities to the Government.

2. The action will not have a severe economic impact on current contractors for the commodities.

3. The action will result in authorizing small entities to furnish the commodities to the Government.

4. There are no known regulatory alternatives which would accomplish the objectives of the Javits-Wagner-O'Day Act (41 U.S.C. 46–48c) in connection with the commodities proposed for addition to the Procurement List.

Accordingly, the following commodities are hereby added to the Procurement List:

Cap, Garrison, Women's (USAF)

8410–01–381–5481
8410–01–381–5559
8410–01–381–5544
8410–01–381–5566
8410–01–381–5521
8410–01–381–5536
8410–01–381–5507
8410–01–381–5612
8410–01–381–5627
8410–01–381–5647
8410–01–381–5504

This action does not affect current contracts awarded prior to the effective date of this addition or options that may be exercised under those contracts.

Beverly L. Milkman,

Executive Director.

[FR Doc. 97–660 Filed 1–9–97; 8:45 am]

BILLING CODE 6353–01–P

Procurement List; Proposed Addition

AGENCY: Committee for Purchase From People Who Are Blind or Severely Disabled

ACTION: Proposed Addition to Procurement List.

SUMMARY: The Committee has received a proposal to add to the Procurement List a service to be furnished by nonprofit agencies employing persons who are blind or have other severe disabilities.

COMMENTS MUST BE RECEIVED ON OR BEFORE: February 10, 1997.

ADDRESSES: Committee for Purchase From People Who Are Blind or Severely Disabled, Crystal Square 3, Suite 403, 1735 Jefferson Davis Highway, Arlington, Virginia 22202–3461.

FOR FURTHER INFORMATION CONTACT: Beverly Milkman (703) 603–7740.

SUPPLEMENTARY INFORMATION: This notice is published pursuant to 41 U.S.C. 47(a) (2) and 41 CFR 51–2.3. Its purpose is to provide interested persons an opportunity to submit comments on the possible impact of the proposed action.

If the Committee approves the proposed addition, all entities of the Federal Government (except as

otherwise indicated) will be required to procure the service listed below from nonprofit agencies employing persons who are blind or have other severe disabilities.

I certify that the following action will not have a significant impact on a substantial number of small entities. The major factors considered for this certification were:

1. The action will not result in any additional reporting, recordkeeping or other compliance requirements for small entities other than the small organizations that will furnish the service to the Government.

2. The action will result in authorizing small entities to furnish the service to the Government.

4. There are no known regulatory alternatives which would accomplish the objectives of the Javits-Wagner-O'Day Act (41 U.S.C. 46–48c) in connection with the service proposed for addition to the Procurement List.

Comments on this certification are invited. Commenters should identify the statement(s) underlying the certification on which they are providing additional information.

The following service has been proposed for addition to Procurement List for production by the nonprofit agency listed:

Duplicating/Copying of Court Documents

(GPO Program #C414–S)

NPA: Alliance, Inc., Baltimore, Maryland.

Beverly L. Milkman,

Executive Director.

[FR Doc. 97–661 Filed 1–9–97; 8:45 am]

BILLING CODE 6353–01–P

DEPARTMENT OF COMMERCE

International Trade Administration

[A–201–805]

Certain Circular Welded Non-Alloy Steel Pipe From Mexico; Initiation of Anticircumvention Inquiry on Antidumping Duty Order

AGENCY: Import Administration, International Trade Administration, Department of Commerce.

ACTION: Notice of initiation of anticircumvention inquiry.

SUMMARY: In response to a request from petitioners in this case [1], the Department of Commerce (the Department) is initiating an anticircumvention inquiry to determine whether imports of (i) pipe certified to the American Petroleum Institute (API) 5L line pipe specifications (API 5L or line pipe) and (ii) pipe certified to both the API 5L line pipe specifications and the less stringent American Society for Testing and Materials (ASTM) A–53 standard pipe specifications (dual certified pipe [2]), falling within the physical dimensions outlined in the scope of the order, are circumventing the antidumping duty order on certain welded non-alloy carbon steel pipe from Mexico (57 FR 49453, November 2, 1992).

EFFECTIVE DATE: January 10, 1997.

FOR FURTHER INFORMATION CONTACT: Robert M. James at (202) 482–5222 or John Kugelman at (202) 482–0649, Antidumping and Countervailing Duty Enforcement Group III, Import Administration, International Trade Administration, U.S. Department of Commerce, 14th Street and Constitution Avenue, NW, Washington, DC, 20230.

APPLICABLE STATUTE AND REGULATIONS: Unless otherwise indicated, all citations to the Tariff Act of 1930, as amended (the Tariff Act), and to the Department's regulations are references to the provisions as they existed on December 31, 1994.

SUPPLEMENTARY INFORMATION:

Background

On April 23, 1993, petitioners requested that the Department conduct an anticircumvention inquiry pursuant to section 781(c) of the Tariff Act covering imports of API 5L line pipe and dual-certified pipe from Mexico. Petitioners alleged that, following publication of the antidumping duty order, exporters of standard pipe from Mexico began circumventing the order by having pipe intended for use as standard pipe certified as line pipe or certified for use as both line and standard pipe. Petitioners further alleged that pipe distributors were substituting pipe certified to the more stringent line and dual-certified specifications for the standard pipe subject to the order, and that end users of standard pipe began using imported line and dual-certified pipe in ''standard pipe applications.'' According to petitioners, the ''transformation of standard pipe into * * * pipe which also meets the line pipe standard is a ''minor alteration of merchandise'' within the meaning of section 781(c) of the [Tariff] Act.'' See Anticircumvention Petition, April 23, 1993 at 1.

After examining petitioners' allegations, we instead initiated a scope inquiry under 19 CFR 353.29(i) on June 7, 1993, to determine whether both API 5L line pipe and dual-certified pipe, when actually used in standard pipe applications, are within the scope of the orders. On March 21, 1996, we determined that both line and dual-certified pipe were explicitly excluded from the orders. Final Negative Scope Determination (61 FR 11608).

On April 12, 1996, Wheatland Tube Company (Wheatland), one of the original petitioners, filed a lawsuit before the Court of International Trade (the Court) challenging the final scope determination and the fact that the Department did not initiate an anticircumvention inquiry, as petitioners originally requested. On July 12, 1996, we requested a remand from the Court in order to provide a full explanation on the record as to why we did not initiate an anticircumvention inquiry or, if appropriate, to initiate such a proceeding. On October 9, 1996, the Court denied our motion for a voluntary remand and, in response to a separate motion filed by Wheatland, also dismissed all counts of the original complaint as to Mexico. [3]

Initiation of Anticircumvention Proceeding

Section 353.29(b) of our regulations provides that applications for anticircumvention determinations contain (1) a detailed description of the product, including technical characteristics and uses of the product, and its current U.S. Tariff Classification number; (2) a statement of the interested party's position as to whether the product is within the scope of an antidumping order, including (i) a summary of the reasons for this conclusion, (ii) citations to any applicable statutory authority, and (iii) attachment of any factual support for this position, including applicable portions of the Secretary's or the Commission's investigation. Where all of these conditions are met, our regulations state we will evaluate the application to determine whether an inquiry is warranted.

Upon review of petitioners' application, we find that it contains a detailed description of the products and

[1] Petitioners are: Allied Tube & Conduit Corp., Sawhill Tubular Division of Tex-Tube Co., Century Tube Corp., Laclede Steel Co., LTV Tubular Products Co.; Sharon Tube Co., Western Tube & Conduit Co., Wheatland Tube Co., and CSI Tubular Products, Inc.

[2] This merchandise, sometimes referred to as ''dual-stenciled,'' may also include ''multiple-stenciled'' pipe.

[3] Based on the Court's denial of our request for voluntary remand, the Department is not initiating an anticircumvention inquiry with respect to pipe imports from Brazil and Korea.

a statement of the petitioners' position as to whether the product is included within the order, as required by 19 CFR 353.29(b). Based on our evaluation of the petition (see Memorandum, Joseph A. Spetrini to Robert S. LaRussa, December 19, 1996, on file in Room B–099 of the Main Commerce Building), we determine that a formal inquiry is warranted.

Accordingly, we are initiating a circumvention inquiry concerning the antidumping duty order on standard pipe from Mexico, pursuant to section 781(c) of the Tariff Act. In accordance with 19 CFR 353.29(j), we will not instruct the Customs Service to suspend liquidation and require a cash deposit of estimated duties on the merchandise which is the subject of this inquiry unless and until we issue an affirmative preliminary determination.

The Department will, following consultation with the interested parties, establish a schedule for questionnaires and comments on the issues. The Department intends to issue its final determination within 300 days of the date of publication of this initiation.

This notice is published in accordance with section 781(c) of the Tariff Act (19 U.S.C. 1677j(c)) and 19 CFR 353.29.

Dated: December 20, 1996.

Robert S. LaRussa,

Acting Assistant Secretary for Import Administration.

[FR Doc. 97–632 Filed 1–9–97; 8:45 am]

BILLING CODE 3510–DS–P

[A–403–801]

Fresh and Chilled Atlantic Salmon From Norway; Final Results of New Shipper Antidumping Duty Administrative Review

AGENCY: Import Administration, International Trade Administration, Department of Commerce.

ACTION: Notice of final results of new shipper antidumping duty administrative review.

SUMMARY: On October 4, 1996, the Department of Commerce (the Department) issued preliminary results in the 1995 new shipper administrative review of the antidumping duty order on fresh and chilled Atlantic salmon from Norway (61 FR 51910). The review covers one manufacturer/exporter Nordic Group A/L (Nordic) of the subject merchandise to the United States. The period of review (POR) is May 1, 1995, through October 31, 1995.

We gave interested parties an opportunity to comment on our preliminary results and received a case brief from petitioner and a rebuttal brief from respondent. The final results remain unchanged from the preliminary results. The final dumping margin for the reviewed firm is listed below in the section entitled ''Final Results of Review''.

EFFECTIVE DATE: January 10, 1997.

FOR FURTHER INFORMATION CONTACT: Todd Peterson or Thomas Futtner, AD/CVD Enforcement, Import Administration, International Trade Administration, U.S. Department of Commerce, 14th Street and Constitution Avenue NW., Washington, DC 20230; telephone: (202) 482–4195 or (202) 482–3814, respectively.

SUPPLEMENTARY INFORMATION:

Applicable Statute and Regulations

Unless otherwise indicated, all citations to the statute are references to the provisions effective January 1, 1995, the effective date of the amendments made to the Tariff Act of 1930 (the Act) by the Uruguay Round Agreements Act (URAA). In addition, unless otherwise indicated, all citations to the Department's regulations are to the current regulations, as amended by the interim regulations published in the Federal Register on May 11, 1995 (60 FR 25130).

Background

On October 4, 1996, the Department issued preliminary results (61 FR 51910) of its new shipper review of the antidumping duty order on fresh and chilled Atlantic salmon from Norway. The preliminary results indicated that Nordic sold subject merchandise at not less than normal value during the POR. We invited parties to comment on the preliminary results.

The Department has now conducted this review in accordance with section 751 of the Act and section 353.22 of its regulations (19 CFR 353.22).

Scope of the Review

The merchandise covered by this review is fresh and chilled Atlantic salmon (salmon). It encompasses the species of Atlantic salmon (Salmo salar) marketed as specified herein; the subject merchandise excludes all other species of salmon: Danube salmon; Chinook (also called ''king'' or ''quinnat''); Coho (''silver''); Sockeye (''redfish'' or ''blueback''); Humpback (''pink''); and Chum (''dog''). Atlantic salmon is whole or nearly whole fish, typically (but not necessarily) marketed gutted, bled, and cleaned, with the head on. The subject merchandise is typically packed in fresh water ice (chilled). Excluded from the subject merchandise are fillets, steaks, and other cuts of Atlantic salmon. Also excluded are frozen, canned, smoked or otherwise processed Atlantic salmon. Fresh and chilled Atlantic salmon is currently provided for under Harmonized Tariff Schedule (HTS) subheading 0302.12.00.02.09. The HTS item number is provided for convenience and Customs purposes. The written description remains dispositive.

Analysis of Comments Received

We gave interested parties an opportunity to comment on our preliminary results. We received a case brief from petitioner and a rebuttal brief from respondent.

Comment 1:

Petitioner contends that Nordic's one sale was made prior to the POR on April 28, 1995, and not on June 30, 1995, as claimed by respondent. Petitioner argues that the essential terms (i.e. price and quantity) of Nordic's sale to its U.S. customer were set in a letter dated April 28, 1995, and not changed substantially before completion of the transaction two months later. Based on this argument, petitioner maintains that the respondent entered into a binding agreement on April 28, 1995, and that this constitutes the correct date of sale.

Respondent contends that the reported sale date of June 23, 1995, (*i.e.* date of shipment) is correct. Respondent argues that it is the Department's established practice to rely on date of shipment as the date of sale when the quantity of the sale is not fixed until date of shipment. *See Cold-Rolled Steel Flat Products from Korea,* (60 FR 65284) December 19, 1995.

Respondent points to the Department's termination of the first new-shipper review of Nordic where the petitioner successfully argued that April 28, 1995, was not the date of sale for the same transaction reported in this review because the price and quantity differed materially between April 28, 1995, and the date of shipment. *See Fresh and Chilled Atlantic Salmon from Norway: Termination In-Part of New Shipper Antidumping Duty Review,* 60 FR 53162, (October 12, 1995).

Department's Position

We agree with respondent. The Department terminated Nordic's first new shipper review, at the request of the petitioner, because the Department determined that Nordic made the U.S. sale to the first unrelated customer based on the invoice date of June 30, 1995, which was outside the POR of November 1, 1994, through April 30,

1995. In making this determination, we concluded that April 28, 1995, was not the correct date of sale because Nordic's April 28, 1995, letter did not identify the unrelated customer in the U.S. We also concluded that there were differences in the price and quantity specified in Nordic's April 28, 1995, letter and the June 30, 1995, invoice date. Accordingly, the Department determined the June 30, 1995, date of invoice to be the correct date of sale. *See* Memorandum from Joseph Spetrini to Susan Esserman, September 20, 1995.

Comment 2

Petitioner argues that Nordic's sole U.S. sale cannot be the basis for Nordic's dumping margin because it is not a *bona fide* sale. Petitioner states that in such situations, the U.S. Court of International Trade (CIT) has recognized that the Department has the authority to disregard U.S. sales that are not the result of a *bona fide* transaction to ''prevent fraud upon its proceedings.'' *See Chang Tieh Industry Company, Ltd.* v. *United States,* 840 F. Supp. 141–46 (CIT 1993). In addition, petitioner points to *Sulfanilic Acid from Hungary,* (58 FR 8257) to demonstrate that the Department has a history of disregarding U.S. sales where it is established that such sales are not *bona fide* transactions.

Petitioner argues that there is abundant evidence to demonstrate that Nordic's single sale under review is not a *bona fide* transaction but rather is a transaction that was contrived for the purpose of escaping dumping liability. As support for this allegation, petitioner offers several arguments. Petitioner asserts that Nordic did not follow its own sales procedure in making this sale. According to petitioner, it is highly unusual for the U.S. customer to have traveled to Norway to arrange this transaction. In addition, there is no evidence of a written order confirmation produced by the U.S. customer that is typically the first document produced in the sales process.

Petitioner contends that Nordic should not qualify as a new entrant into the fresh Atlantic salmon market based on making only one U.S. sale of the subject merchandise during the period November 1994 through October 1995. During this period, petitioner claims that there were no other sales of the subject merchandise to other markets. Rather, petitioner charges that respondent will enter the U.S. market after obtaining a zero dumping margin for its contrived sale.

Petitioner contends that Nordic's U.S. customer, a smoker, paid an above market price for the sale under review. In support of this allegation, petitioner submitted an affidavit from a large U.S. salmon smoker that states that smokers can use frozen salmon at a price far less than the price incurred to Nordic for fresh salmon. The U.S. smoker also states that his company has not had an order for the covered merchandise because it is too expensive as a result of the antidumping duties and high movement charges. Petitioner points to U.S. import statistics which show that Nordic's U.S. smoker could have purchased frozen salmon at a price far below the price commanded by the fresh salmon it purchased from Nordic.

Petitioner insists that the sale in question was not based on commercial considerations, but rather, Nordic's illegitimate purpose of achieving a zero rate. Petitioner supports this by pointing to the fact that less that one-half of one percent of Nordic's total sales to the U.S. customer were fresh salmon; the rest were frozen salmon. Petitioner further points out that Nordic has never sold fresh salmon to any another U.S. smoker. Petitioner argues that there is nothing on record to support why the U.S. customer would purchase such a small amount of fresh salmon.

Petitioner provides documentation to demonstrate that Nordic's U.S. customer could have purchased fresh salmon from alternative sources such as Canada, Maine and Chile at significantly lower prices. Petitioner insists that not only was the sale in question priced higher than other comparable U.S. sales, but it was also priced higher than other world sales of fresh Norwegian salmon. Petitioner provides documentation to support his assertion that the European price is higher than the price paid in the sale under review.

Petitioner insists that in order for the Department to accept the *bona fide* nature of this sale, the Department must investigate Nordic's U.S. customer. Petitioner points to *PQ Corporation* v. *United States,* 652 F. Supp. 724 (CIT 1987) *(PQ Corporation),* to demonstrate that when there is a question pertaining to the *bona fide* nature of U.S. sales, the Department vigorously investigates to determine whether the U.S. sales are indeed *bona fide* sales. Thus, petitioner advocates a thorough investigation of the U.S. customer.

Respondent contends that there is nothing on record to support the argument that the sale in question is not a *bona fide* transaction. The respondent points to *Chang Tieh Industry Co., Ltd.* v. *United States,* 840 F. Supp. 141, 145 (CIT 1993) to show that the CIT has noted that antidumping laws do not contain provisions to disregard U.S. sales in the same manner that the statute directs the Department to disregard home market sales intended to establish a fictitious market. Therefore, respondent states *arguendo,* even had this one U.S. sale been considered outside the ordinary course of trade, the Department is not required by statute to disregard that sale. However, respondent concedes that the Department has the discretion, citing to *Ipsco, Inc.* v. *United States,* 714 F. Supp. 1211 (CIT 1989), to disregard U.S. sales that are considered to be atypical and not representative of a respondent's U.S. sales. Because there was only one sale, this standard cannot be relied on as the one sale is entirely representative of all U.S. sales. Respondent refutes the applicability of *Sulfanilic Acid from Hungary,* 58 FR 8256 February 12, 1993, where U.S. sales were disregarded because of fabricated verification documents. Similarly, respondent refutes the applicability of *Manganese Metal From the People's Republic of China,* 60 FR 56045 November 6, 1995 (Manganese). Unlike this review, in the *Manganese* investigation, the Department disregarded sales based on the suspicious timing of the petition filing relative to the sales being made and the ''significantly higher prices reported for this fungible commodity.''

Respondent argues the fact that there was one sale cannot form the basis for a determination that the sale is not a *bona fide* transaction. In *PQ Corporation,* the CIT found it proper for the Department to review the respondent's one sale to the United States with the intention of eliminating a dumping margin. Respondent points to the Memorandum from Holly Kuga to the File of July 26, 1995, stating that ''a new shipper review for salmon based on one sale would be consistent with prior practice.''

Respondent further substantiates the *bona fide* nature of the transaction under review, contending that the record evidence demonstrates that its U.S. sale was made in the ordinary course of trade. Respondent argues that it followed customary sales procedures for this sale. Part of the customary procedure is for the President of Nordic Group, Inc. (the U.S. subsidiary) to travel back to Norway, often with U.S. customers as a means to educate the U.S. customer. *See* Sales Verification report.

Respondent argues that petitioner is wrong in its claim that Nordic is not a new entrant to the U.S. fresh Atlantic salmon market because Nordic has made only one sale during the POR. Respondent states that by definition, to qualify for a new shipper review, Nordic did not sell any salmon prior to the

POR. Since Nordic is currently assessed an ''all-others'' rate of 23.80 percent, U.S. customers are difficult to attract. Thus Nordic's one sale is justifiable and does not disqualify Nordic as a new shipper in the U.S. market.

Respondent argues that Nordic's price for fresh Norwegian salmon is within the price range charged by others for fresh Norwegian salmon sold to the United States. Nordic claims that it was aware of the antidumping duty order and did its best to negotiate a price that would not violate U.S. antidumping laws. Respondent argues that in alleging Nordic's U.S. customer paid an above market price for the sale under review, the petitioner incorrectly compared the price of frozen salmon from other countries to that of fresh salmon from Norway. Frozen salmon is outside the scope of the order. The International Trade Commission found that fresh salmon is more expensive than frozen and that Norwegian Atlantic salmon is also considered by purchasers to be a higher priced product and is typically more expensive than U.S. produced salmon. Thus, the price of Norwegian Atlantic salmon cannot be compared to world market prices. Respondent dismisses the U.S. smoker's claim that the U.S. smoker cannot profitably purchase premium Norwegian Atlantic salmon because he either sells ''low end'' salmon or he runs an inefficient, high cost operation.

Respondent states that to the extent price is relevant to determine the *bona fide* nature of the U.S. transaction, the comparison should be limited to the prices of subject merchandise sold in the United States in June 1995. According to the June 1995 Report IM 145, Department of Commerce, Bureau of the Census, Foreign Trade Division, Trade Data Services, Washington, D.C. (IM 145 Report), the price of Nordic's sale is consistent with other contemporaneous sales of fresh Norwegian salmon sold in the United States.

Respondent argues that *PQ Corporation* does not compel the Department to investigate the U.S. customer to verify the *bona fide* nature of a transaction simply because a petitioner thinks the U.S. price is too high. Rather the result of *PQ Corporation* is that an administrative review could be based on one sale even though the importation was made for the purpose of adjusting the antidumping cash deposit rate.

Department's Position

We disagree with petitioner. While there is no specific statutory or regulatory provision for the exclusion of U.S. sales as ''outside the ordinary course of trade,'' the Department's authority to prevent fraud upon its proceedings has been recognized. *See Chang Tieh*, 840 F. Supp. at 146. The Department may disregard a U.S. sale if it is determined that the sale is not the result of a *bona fide* arm's length transaction. *PQ Corp.*, 652 F. Supp. at 729. We are very mindful of this issue, especially in the context of new shipper reviews, and take appropriate steps to investigate credible allegations. Based on our review of this here, we conclude that there is no evidence on the record to indicate that the single U.S. sale under review was not a *bona fide* transaction or that the transaction was in any way fraudulent. Further, insofar as there was no written order confirmation for the transaction under review, we relied on Nordic's June 30, 1995, invoice to determine the date of sale. *See* Department's position on Comment 1.

At the outset, we note that the fact that there is only one U.S. sales transaction does not suggest that the transaction is not *bona fide*. As reflected in the Department's practice, the dumping analysis may be based upon a single sale even where the sale is designed for the express purpose of reducing the cash deposit rate. *See P.Q. Corp.*, 652 F. Supp. at 729. This may be even more true in the context of a new shipper review, where new entrants into the market are likely to assess (based on the Department's antidumping analysis) whether they can sell on a sustained basis. In this case, the Department advised that such a review could be based on one sale provided that the transaction be completed and all relevant data available prior to verification. *See* July 26, 1995 Memorandum from Holly Kuga to File. Moreover, the fact that the quantity involved in this transaction represents a small fraction of Nordic's total sales is not a determining factor in our analysis of the *bona fide* nature of the sale of subject merchandise. Thus, the fact that Nordic engaged in only one transaction cannot detract from the *bona fide* nature of the transaction.

We also disagree with petitioner's assertion that Nordic employed an unusual sales procedure with respect to this transaction. At verification, we confirmed that the President of Nordic Inc. (the U.S. subsidiary) often traveled to Norway with U.S. customers. *See* Nordic Sales Verification Report at 3. Nordic officials indicated that they were expanding their relationship with the U.S. customer which had previously focused on frozen salmon. *Id.* There is no evidence on the record to contradict this statement. Moreover, we are not persuaded by the statement submitted by a U.S. salmon smoking operation that it would not use fresh salmon as an input. As Nordic explained in its October 7, 1996, supplemental questionnaire response, the U.S. customer could be expected to keep both fresh and frozen salmon on hand in order to serve a range of customers.

With regard to petitioner's comments on the price of the sale, according to the IM 145 Report, the price Nordic charged was within the range of prices of other sales of the subject merchandise from Norway during the relevant June 1995 time period. Petitioner incorrectly compared prices of the subject merchandise to that of non-subject merchandise (frozen salmon) or salmon from other countries. Given evidence that Norwegian salmon is typically a higher priced product due to it being considered a premium product, we determine that the use of fresh salmon prices from other producing countries is an inaccurate basis for comparison.

Finally, we disagree with petitioner's suggestion that the Department has not sufficiently investigated this transaction. Based on the Department's review of Nordic's initial and supplemental questionnaire responses, its on-site verification of Nordic's records, and other information of record, we conclude that there is no evidence on record to indicate that the single U.S. sale under review was not a *bona fide* transaction or that the transaction was in anyway fraudulent.

Comment 3

Petitioner contends that the Department's constructed value methodology is improper given the facts of this review. In past reviews of this proceeding, petitioner contended that the third-country export prices used as foreign market value were made at prices below the cost of production. Thus, petitioner argued for use of the salmon farmers' actual cost of production as opposed to the acquisition prices paid by the exporters to the farmers. In this review, however, there are no home market or third country sales. Therefore, the petitioner argues that these different circumstances require foreign market value to be based on constructed value using the price Nordic actually paid for the merchandise. Petitioner argues that by using the actual price paid, the Department would fulfill the original concern of petitioner.

Respondent contends that the Department correctly determined constructed value on the basis of cost of cultivation. Respondent argues that

petitioner's argument is essentially a middleman dumping argument and should be rejected. The Department is not free to choose the higher of fish farmer cost or exporter acquisition price. The Department's policy for using the fish farmers' cost of production rather than the exporter's acquisition price was established in the Memorandum from David Mueller, dated December 18, 1990, and has been used as the basis for determining cost of production in all salmon reviews.

Department's Position

We agree with respondent. We consider the live salmon produced by the fish farmers and sold to the exporters to be the same merchandise covered by the antidumping duty order, but at an earlier stage of production. Accordingly, we consider the live salmon produced by the fish farmers to be the identical merchandise and not an input of the subject merchandise. As we found in all prior administrative reviews of this proceeding, the responding exporter is not transforming the merchandise. To determine the cost of producing salmon, the Department properly reviewed respondent's costs as well as the fish farm cost of cultivation.

Insofar as the Department used the same methodology described in the preliminary results, the final results remain unchanged from the preliminary results. As a result of our comparison of constructed export price (CEP) and normal value (NV), we determine that the following weighted-average dumping margin exists:

Manufacturer/exporter	Period	Margin
Nordic Group A/L.	5/1/95–10/31/95	0.00

The results of this review shall be the basis for the assessment of antidumping duties on entries of merchandise covered by the determination and for future deposits of estimated duties. The posting of a bond or security in lieu of a cash deposit, pursuant to section 751(a)(2)(B)(iii) of the Act and section 353.22(h)(4) of the Department's regulations, will no longer be permitted for this firm. The Department will issue appraisement instructions directly to the Customs Service.

Furthermore, the following deposit requirements will be effective for all shipments of the subject merchandise entered, or withdrawn from warehouse, for consumption on or after the publication date of these final results of this administrative review, as provided by section 751(a)(2)(C) of the Act: (1) The cash deposit rate for the reviewed company will be zero percent; (2) for exporters not covered in this review, but covered in previous reviews or the original less-than-fair-value (LTFV) investigation, the cash deposit rate will continue to be the company-specific rate published for the most recent period; (3) if the exporter is not a firm covered in this review, previous reviews, or the original LTFV investigation, but the manufacturer is, the cash deposit rate will be the rate established for the most recent period for the manufacturer of the merchandise; and (4) the cash deposit rate for all other manufacturers or exporters will continue to be 23.80 percent. This rate is the ''All Others'' rate from the LTFV investigation.

These deposit requirements shall remain in effect until publication of the final results of the next administrative review.

This notice also serves as a final reminder to importers of their responsibility under 19 CFR 353.26 to file a certificate regarding the reimbursement of antidumping duties prior to liquidation of the relevant entries during this review period. Failure to comply with this requirement could result in the Secretary's presumption that reimbursement of antidumping duties occurred and the subsequent assessment of double antidumping duties.

This notice also serves as a reminder to parties subject to administrative protective orders (APOs) of their responsibility concerning the disposition of proprietary information disclosed under APO in accordance with 19 CFR 353.34(d)(1). Timely written notification of the return/destruction of APO materials or conversion to judicial protective order is hereby requested. Failure to comply with the regulations and the terms of an APO is a sanctionable violation.

This new shipper administrative review and notice are in accordance with section 751(a)(2)(B) of the Act (19 U.S.C. 1675(a)(2)(B)) and 19 CFR 353.22(h).

Dated: December 30, 1996.

Robert S. LaRussa,

Assistant Secretary for Import Administration.

[FR Doc. 97–634 Filed 1–9–97; 8:45 am]

BILLING CODE 3510–DS–P

[A–570–832]

Pure Magnesium From the People's Republic of China (PRC): Rescission of Notice of Initiation of New Shipper Antidumping Duty Administrative Review

AGENCY: Import Administration, International Trade Administration, Department of Commerce.

EFFECTIVE DATE: January 10, 1997.

FOR FURTHER INFORMATION CONTACT: Everett Kelly or Dorothy Tomaszewski, Import Administration, International Trade Administration, U.S. Department of Commerce, 14th Street and Constitution Avenue, NW., Washington, DC 20230; telephone (202) 482–4194 or 482–0631, respectively.

Applicable Statute and Regulations

Unless otherwise indicated, all citations to the Tariff Act of 1930, as amended (the Act), are references to the provisions effective January 1, 1995, the effective date of the amendments made to the Act by the Uruguay Round Agreements Act. In addition, unless otherwise indicated, all citations to the Department's regulations are to the current regulations, as amended by the interim regulations published in the Federal Register on May 11, 1995 (60 FR 25130).

SUPPLEMENTARY INFORMATION:

Background

In accordance with section 751(a)(2)(ii) of the Act and 19 CFR 353.22(h)(6) Taiyuan Heavy Machinery Import and Export Corporation (Taiyuan) requested a new shipper administrative review of the antidumping duty order on pure magnesium from the PRC. The Department of Commerce (the Department) inadvertently published two notices of initiation, one on December 30, 1996 (*Notice of Initiation of New Shipper Antidumping Duty Administrative Review: Pure Magnesium from the People's Republic of China* (60 FR 68712, 68713 December 30, 1996) and one on December 31, 1996 (*Notice of Initiation of New Shipper Antidumping Duty Administrative Review: Pure Magnesium from the People's Republic of China* (61 FR 69067 December 31, 1996).

Rescission of Initiation of Review

The December 30, 1996, notice of initiation was published in error and is hereby rescinded. We are proceeding to conduct a review of Taiyuan for the period May 1, 1996 through October 31,

1996, pursuant to the December 31, 1996, notice of initiation.

Dated: January 6, 1997.

Jeffrey P. Bialos,

Principal Deputy Assistant Secretary, Import Administration.

[FR Doc. 97–635 Filed 1–9–97; 8:45 am]

BILLING CODE 3510–DS–M

[A–583–508]

Porcelain-on-Steel Cooking Ware From Taiwan: Initiation and Preliminary Results of Changed Circumstances Antidumping Duty Administrative Review, and Intent To Revoke Order in Part

AGENCY: Import Administration, International Trade Administration, Department of Commerce.

ACTION: Notice of initiation and preliminary results of changed circumstances antidumping duty administrative review, and intent to revoke order in part.

SUMMARY: In response to a request from General Housewares Corporation (GHC), the Department of Commerce (the Department) is initiating a changed circumstances antidumping duty administrative review and issuing a notice of preliminary intent to revoke in part the antidumping duty order on porcelain-on-steel cooking ware from Taiwan. GHC requested that the Department revoke the order in part with regard to teakettles. Based on the fact that GHC, who filed the original petition in this case, has expressed no interest in the importation or sale of teakettles, we intend to partially revoke this order.

EFFECTIVE DATE: January 10, 1997.

FOR FURTHER INFORMATION CONTACT: Amy S. Wei or Zev Primor, Office of Antidumping/Countervailing Duty Enforcement, Import Administration, International Trade Administration, U.S. Department of Commerce, 14th Street and Constitution Avenue, N.W., Washington, D.C. 20230; telephone (202) 482–4737.

SUPPLEMENTARY INFORMATION:

The Applicable Statute and Regulations

Unless otherwise indicated, all citations to the statute are references to the provisions effective January 1, 1995, the effective date of the amendments made to the Tariff Act of 1930, as amended (the Act), by the Uruguay Round Agreements Act (URAA). In addition, unless otherwise indicated, all citations to the Department's regulations are to the current regulations, as amended by the interim regulations published in the Federal Register on May 11, 1995 (60 FR 25130).

Background

On September 12, 1996, GHC requested that the Department conduct a changed circumstances administrative review to determine whether to partially revoke the order on porcelain-on-steel cooking ware from Taiwan with regard to teakettles. GHC stated that it is the only U.S. producer of porcelain-on-steel cooking ware and that, in the original petition, it requested that the scope of the order include teakettles. GHC also stated that it no longer manufactures porcelain-on-steel teakettles and has no further interest in the antidumping duty order with respect to teakettles.

Scope of Review

The products covered by this antidumping order are porcelain-on-steel cooking ware, including teakettles, which do not have self-contained electric heating elements. All of the foregoing are constructed of steel and are enameled or glazed with vitreous glasses. Kitchenware is not subject to this order. *See Antidumping Duty Order; Porcelain-on-Steel Cooking Ware from Taiwan,* 51 FR 43416 (December 2, 1986).

The merchandise covered by this changed circumstances review are teakettles from Taiwan. Imports of teakettles are currently classifiable under the harmonized tariff schedule (HTS) subheading 7323.94.00.10. The HTS subheading is provided for convenience and U.S. Customs purposes. Our written description of the scope of this proceeding is dispositive. The order with regard to imports of other porcelain-on-steel cooking ware is not affected by this request.

Initiation and Preliminary Results of Changed Circumstances Antidumping Duty Administrative Review, and Intent To Revoke Order in Part

Pursuant to section 751(d) of the Act, the Department may partially revoke an antidumping duty order based on a review under section 751(b) of the Act (*i.e.*, a changed circumstances review). Section 751(b)(1) of the Act requires a changed circumstances administrative review to be conducted upon receipt of a request containing sufficient information concerning changed circumstances.

The Department's regulations at 19 CFR 353.25(d)(2) permit the Department to conduct a changed circumstances administrative review under section 353.22(f) based upon an affirmative statement of no interest from the petitioner in the proceeding. Section 782(h) of the Act and 19 CFR 353.25(d)(1)(i) further provide that the Department may revoke an order or revoke an order in part if it determines that the order, or part of the order, under review is no longer of interest to interested parties. In addition, in the event that the Department concludes that expedited action is warranted, section 353.22(f)(4) of the regulations permits the Department to combine the notices of initiation and preliminary results.

Therefore, in accordance with sections 751(b)(1) and 751(d) of the Act, 19 CFR 353.25(d), and 353.22(f), we are initiating this changed circumstances administrative review and have determined that expedited action is warranted. Based on an affirmative statement of no interest by petitioner with respect to teakettles, we have preliminarily determined that the portion of the order on porcelain-on-steel cooking ware from Taiwan concerning teakettles no longer is of interest to domestic interested parties. Because we have concluded that expedited action is warranted, we are combining these notices of initiation and preliminary results. Therefore, we are hereby notifying the public of our intent to revoke in part the antidumping duty order as to imports of teakettles from Taiwan.

If final revocation in part occurs, we will instruct the U.S. Customs Service to end the suspension of liquidation and to refund, with interest, any estimated antidumping duties collected for all unliquidated entries of teakettles that are not subject to a final results of administrative review. The current requirement for a cash deposit of estimated antidumping duties will continue until publication of the final results of this changed circumstances review.

Public Comment

Parties to the proceeding may request disclosure within 5 days of the date of publication of this notice and any interested party may request a hearing within 10 days of publication. Any hearing, if requested, will be held no later than 28 days after the date of publication of this notice, or the first working day thereafter. Case briefs and/or written comments from interested parties may be submitted no later than 14 days after the date of publication of this notice. Rebuttal briefs and rebuttals to written comments, limited to the issues raised in those case briefs or comments, may be filed no later than 21 days after the date of publication of this notice. All written comments shall be

submitted in accordance with 19 CFR 353.31(e) and shall be served on all interested parties on the Department's service list in accordance with 19 CFR 353.31(g). Persons interested in attending the hearing should contact the Department for the date and time of the hearing. The Department will publish the final results of this changed circumstances review, including the results of its analysis of issues raised in any written comments.

This notice is in accordance with sections 751 (b)(1) and (d) of the Act and sections 353.22(f) and 353.25(d) of the Department's regulations.

Dated: December 31, 1996.

Robert S. LaRussa,

Acting Assistant Secretary for Import Administration.

[FR Doc. 97–631 Filed 1–9–97; 8:45 am]

BILLING CODE 3510–DS–P

[A–583–815]

Certain Welded Stainless Steel Pipe From Taiwan; Preliminary Results of Administrative Review

AGENCY: Import Administration, International Trade Administration, Department of Commerce.

ACTION: Notice of Preliminary Results of Administrative Review.

SUMMARY: In response to a request by respondent Ta Chen Stainless Pipe Co., Ltd. (Ta Chen), the Department of Commerce (the Department) is conducting an administrative review of the antidumping duty order on certain welded stainless steel pipe from Taiwan (A–583–815). This review covers one manufacturer/exporter of the subject merchandise to the United States during the period December 1, 1994 through November 30, 1995.

We preliminarily determine that sales of welded stainless steel pipe (WSSP) have been made below the normal value (NV). If these preliminary results are adopted in our final results of administrative review, we will instruct the U.S. Customs Service to assess antidumping duties equal to the difference between United States price and NV. Interested parties are invited to comment on these preliminary results. Parties who submit comments are requested to submit with the argument: (1) A statement of the issues; and (2) a brief summary of the argument.

EFFECTIVE DATE: January 10, 1997.

FOR FURTHER INFORMATION CONTACT: Robert James at (202) 482–5222 or John Kugelman at (202) 482–0649, Antidumping and Countervailing Duty Enforcement Group III, Import Administration, International Trade Administration, U.S. Department of Commerce, 14th Street and Constitution Avenue, NW., Washington, DC 20230.

APPLICABLE STATUTE AND REGULATIONS: Unless otherwise indicated, all citations to the Tariff Act of 1930, as amended (the Tariff Act), are to the provisions effective January 1, 1995, the effective date of the amendments made to the Tariff Act by the Uruguay Round Agreements Act. In addition, unless otherwise indicated, all citations to the Department's regulations are to the current regulations, as amended by the interim regulations published in the Federal Register on May 11, 1995 (60 FR 25130).

SUPPLEMENTARY INFORMATION:

Background

On December 30, 1992, the Department published in the Federal Register the antidumping duty order on WSSP from Taiwan (57 FR 62300). On December 4, 1995, the Department published the notice of ''Opportunity to Request Administrative Review'' for the period December 1, 1994 through November 30, 1995 (60 FR 62070). In accordance with 19 CFR 353.22(a)(1) (1995), Ta Chen requested that we conduct a review of its sales. On February 1, 1996, we published in the Federal Register a notice of initiation of this antidumping duty administrative review covering the period December 1, 1994 through November 30, 1995 (61 FR 3670).

Because it was not practicable to complete this review within the normal time frame, on September 12, 1996, we published in the Federal Register our notice of extension of time limits for this review (61 FR 48126). As a result, we extended the deadline for these preliminary results to December 30, 1996. The deadline for the final results will continue to be 120 days after publication of these preliminary results.

Scope of the Review

The merchandise subject to this administrative review is certain welded austenitic stainless steel pipe (WSSP) that meets the standards and specifications set forth by the American Society for Testing and Materials (ASTM) for the welded form of chromium-nickel pipe designated ASTM A–312. The merchandise covered by the scope of the order also includes austenitic welded stainless steel pipes made according to the standards of other nations which are comparable to ASTM A–312.

WSSP is produced by forming stainless steel flat-rolled products into a tubular configuration and welding along the seam. WSSP is a commodity product generally used as a conduit to transmit liquids or gases. Major applications for WSSP include, but are not limited to, digester lines, blow lines, pharmaceutical lines, petrochemical stock lines, brewery process and transport lines, general food processing lines, automotive paint lines, and paper process machines.

Imports of WSSP are currently classifiable under the following Harmonized Tariff Schedule of the United States (HTS) subheadings: 7306.40.5005, 7306.04.5015, 7306.40.5040, 7306.40.5065, and 7306.40.5085. Although these subheadings include both pipes and tubes, the scope of this investigation is limited to welded austenitic stainless steel pipes. Although the HTS subheadings are provided for convenience and Customs purposes, our written description of the scope of this order is dispositive.

The period for this review is December 1, 1994 through November 30, 1995. This review covers one manufacturer/exporter, Ta Chen.

Use of Facts Available

We preliminarily determine that the use of facts available is appropriate for a portion of Ta Chen's U.S. sales, in accordance with section 776(a) of the Tariff Act, because Ta Chen mischaracterized a portion of its U.S. sales as EP sales when, in fact, these are properly considered Constructed Export Price (CEP) sales. Ta Chen reported in its initial questionnaire response of April 30, 1996 that all of its U.S. sales were EP sales with each reported sale being made to an unaffiliated customer. However, in its November 12, 1996, supplemental questionnaire response, Ta Chen provided additional information with respect to one U.S. customer which clearly indicates that Ta Chen and this customer were affiliated within the meaning of section 771(33) of the Tariff Act.

Section 771(33)(G) of the Tariff Act holds that two parties shall be considered ''affiliated'' if one party ''controls'' the other. One party controls another if the party ''is legally or operationally in a position to exercise restraint or direction over the other person.'' From the information provided by Ta Chen, we have preliminarily determined that Ta Chen was ''operationally in a position to exercise restraint or direction over'' the U.S. customer at issue. Ta Chen reported that it controlled this customer's disbursements and had physical custody of its signature stamp used to

execute checks and other instruments. The two parties also shared common sales department personnel. Further, Ta Chen had full and complete access, via computer modem, to this customer's accounting system, including its accounts receivable, accounts payable, payroll, and other company books. Ta Chen also indicated that its president participated directly in negotiating the terms of certain sales this customer made to subsequent purchasers of WSSP in the United States. Finally, this customer offered its accounts receivable and inventory as security for a line of credit obtained from a local bank by Ta Chen International (TCI), Ta Chen's wholly-owned U.S. subsidiary. Thus, this customer placed its continued ability to operate in the hands of a putatively unaffiliated party, TCI. Based upon the totality of evidence before the Department in this matter, we preliminarily determine that Ta Chen effectively exercised operational control over this putatively unaffiliated customer. *See* the public version of the Department's Preliminary Analysis Memorandum to the File, on file in Room B–099 of the Main Commerce Building.

Since Ta Chen reported its sales prices to this affiliated customer, and not the customer's sales prices to the first unaffiliated customer in the United States, Ta Chen failed to provide the Department with a complete and reliable listing of its U.S. sales. We preliminarily determine, therefore, pursuant to section 776(a)(2) of the Tariff Act, that Ta Chen withheld information requested by the Department by failing to report all of its sales to its first unaffiliated customers in the United States. In selecting the facts available, section 776(b) of the Tariff Act provides that where, as here, an interested party has failed to cooperate by not acting to the best of its ability to comply with a request for information, the Department may use an inference that is adverse to the interests of that party in selecting among the facts available. Section 776(b) also authorizes the Department to use as adverse facts available information derived from the petition, the final determination, a previous administrative review, or other information placed on the record. Because information from prior proceedings constitutes secondary information, section 776(c) of the Tariff Act provides that the Department shall, to the extent practicable, corroborate that secondary information from independent sources reasonably at its disposal. The Statement of Administrative Action (SAA) notes that ''corroborate'' means simply that the Department will satisfy itself that the secondary information to be used has probative value (*see* H. Doc. 316, Vol. 1, 103d Cong., 2d Sess. 870 (1996)). To corroborate secondary information, the Department will, to the extent practicable, examine the reliability and relevance of the information to be used. However, unlike for other types of information, such as input costs or selling expenses, there are no independent sources for dumping margins. Thus, when in an administrative review the Department chooses as facts available a dumping margin from a prior segment of the proceeding, it is not necessary to question the reliability of the margin for the time period. With respect to the relevance aspect of corroboration, however, the Department will consider information reasonably at its disposal as to whether there are circumstances that would render a margin irrelevant. In this case, there are no circumstances present to indicate that the selected margin is not appropriate as facts available. In this case, we have used the highest rate from any prior segment of the proceeding, 31.9 percent, the highest rate from the less-than-fair-value (LTFV) determination, for Ta Chen's sales made through this particular U.S. customer.

Export Price

Ta Chen reported in its initial and supplemental questionnaire responses that all of its U.S. sales were first sold to unrelated purchasers prior to importation into the United States. A substantial portion of these sales were made through Ta Chen's U.S. subsidiary, TCI. Ta Chen claims that for each of these sales, TCI acted merely as a ''facilitator,'' handling sales- and Customs-related paper work. In each instance, according to Ta Chen, the price and quantity of the U.S. sale were determined prior to importation into the United States. The remainder of Ta Chen's U.S. sales were to an unrelated importer, who subsequently resold the merchandise after importation into the United States. Therefore, with the exception noted above under ''Use of Facts Available,'' in calculating U.S. price we used export price (EP) for all of Ta Chen's sales, as defined in section 772(a) of the Tariff Act. We calculated EP as the packed, delivered or ex-U.S. port price to unaffiliated purchasers in the United States. In accordance with section 772(c)(2)(A) of the Tariff Act, we reduced this price by Taiwanese pre-sale inland freight, international ocean freight, marine insurance, Taiwanese brokerage and handling, U.S. brokerage and handling, U.S. duty, and U.S. inland freight. Where appropriate, we also reduced the EP by Taiwanese and U.S. bank charges.

Duty Absorption

On July 16, 1996, petitioners requested that the Department determine whether Ta Chen had absorbed antidumping duties during the period of review (POR) pursuant to section 751(a)(4) of the Tariff Act. Section 751(a)(4) requires the Department, if requested, to determine, during an administrative review initiated two years or four years after publication of the order, whether antidumping duties have been absorbed by a foreign producer or exporter subject to the order, if the subject merchandise is sold in the United States through an importer who is affiliated with such foreign producer or exporter. Section 751(a)(4) was added to the Tariff Act by the URAA. The Department's interim regulations do not address this provision of the Tariff Act.

For transition orders as defined in section 751(c)(6)(C) of the Tariff Act, *i.e.*, orders in effect as of January 1, 1995, section 351.213(j)(2) of the Department's proposed antidumping regulations provides that the Department will make a duty absorption determination, if requested, for any administrative review initiated in 1996 or 1998. *See Notice of Proposed Rulemaking*, 61 FR 7308, 7366 (February 27, 1996). The preamble to the proposed antidumping regulations explains that reviews initiated in 1996 will be considered initiated in the second year and reviews initiated in 1998 will be considered initiated in the fourth year. *Id.* at 7317. Although these proposed antidumping regulations are not yet binding upon the Department, they do constitute a public statement of how the Department expects to proceed in applying section 751(a)(4) of the amended statute. This approach assures that interested parties will have the opportunity to request a duty absorption determination on entries for which the second and fourth years following an order have already passed, prior to the time for sunset review of the order under section 751(c). Because the order on WSSP from Taiwan has been in effect since 1992, this qualifies as a transition order. Therefore, based on the policy stated above, the Department will first consider a request for an absorption determination during a review initiated in 1996. This being a review initiated in 1996, we are making a duty-absorption determination as part of this segment of the proceeding.

The statute provides for a determination on duty absorption if the

subject merchandise is sold in the United States through an affiliated importer. In this case, TCI, Ta Chen's wholly owned subsidiary, is the importer of record for a majority of Ta Chen's U.S. sales, *i.e.*, the exporter and the importer are the same entity. Therefore, the importer and the exporter are ''affiliated'' within the meaning of 751(a)(4). Furthermore, we have preliminarily determined that there is a dumping margin for Ta Chen on 13.47 percent (by quantity) of its U.S. sales during the POR. In addition, we cannot conclude from the record that the unaffiliated purchaser in the United States will pay the ultimately assessed duty. Under these circumstances, therefore, we preliminarily find that antidumping duties have been absorbed by Ta Chen on 13.57 percent of its U.S. sales.

Normal Value

A. Viability

Based upon (i) our comparison of the aggregate quantity of home market and U.S. sales, (ii) the absence of any information that a particular marketing situation in Taiwan does not permit a proper comparison, and (iii) the fact that Ta Chen's quantity of sales in the home market exceeded five percent of its sales to the U.S. market, we determined that the quantity of foreign like product Ta Chen sold in Taiwan was sufficient to permit a proper comparison with the sales of subject merchandise to the United States pursuant to section 773(a) of the Tariff Act. Therefore, in accordance with section 773(a)(1)(B)(i) of the Tariff Act, we based NV on the prices at which the foreign like products were first sold for consumption in the exporting market, *i.e.*, Taiwan.

B. Cost-of-Production Analysis

Because we disregarded sales below the cost of production in the LTFV investigation (the most-recently completed segment of these proceedings), we have reasonable grounds to believe or suspect that sales of the foreign like product under consideration for determining NV in this review may have been at prices below the cost of production (COP), as provided in section 773(b)(2)(A)(ii) of the Tariff Act (see Final Determination of Sales at Less Than Fair Value; Certain Welded Stainless Steel Pipe from Taiwan, 57 FR 53705 (November 12, 1992)). Therefore, pursuant to section 773(b)(1) of the Tariff Act, we initiated a COP investigation of sales by Ta Chen (see Memorandum to the File, dated February 13, 1996, available in Room B–099 of the Main Commerce Building).

In accordance with section 773(b)(3) of the Tariff Act, we calculated COP based on the sum of materials and fabrication employed in producing the foreign like product, plus selling, general, and administrative expenses (SG&A) and the cost of all expenses incidental to placing the foreign like product in condition packed ready for shipment. We relied on the home market sales and COP information Ta Chen provided in its questionnaire responses.

After calculating COP, we tested whether home market sales of subject WSSP were made at prices below COP within an extended period of time and whether such prices permit the recovery of all costs within a reasonable period of time. We compared model-specific COPs to the reported home market prices less any applicable movement charges, and post-sale price adjustments (reported as discounts).

Pursuant to section 773(b)(2)(C) of the Tariff Act, where less than twenty percent of Ta Chen's home market sales for a model were at prices less than the COP, we did not disregard any below-cost sales of that model because we determined that the below cost sales were not made within an extended period of time in ''substantial quantities.'' Where twenty percent or more of Ta Chen's home market sales were at prices less than the COP, we determined that such sales were made within an extended period of time in substantial quantities in accordance with section 773(b)(2) (B) and (C) of the Tariff Act. To determine whether such sales were at prices which would not permit the full recovery of all costs within a reasonable period of time, in accordance with section 773(b)(2)(D) of the Tariff Act, we compared home market prices to the weighted-average COPs for the POR.

The results of our cost test for Ta Chen indicated that for certain home market models less than twenty percent of the sales of the model were at prices below COP. We therefore retained all sales of these models in our analysis and used them as the basis for determining NV. Our cost test for Ta Chen also indicated that within an extended period of time (one year, in accordance with section 773(b)(2)(B) of the Tariff Act) for certain other home market models more than twenty percent of the home market sales were at prices below COP which would not permit the full recovery of all costs within a reasonable period of time. In accordance with section 773(b)(1) of the Tariff Act, we therefore excluded the below-cost sales of these models from our analysis and used the remaining above-cost sales as the basis for determining NV.

C. Product Comparisons

We compared Ta Chen's U.S. sales with contemporaneous sales of the foreign like product in the home market. We considered pipe identical based on product nomenclature and considered specifications/alloy, nominal pipe size, and wall thickness in determining the most similar types of pipe. We used a twenty percent cap in reported differences in merchandise as the maximum difference in cost allowable for similar merchandise. For purposes of these preliminary results, we have used the difference-in-merchandise information Ta Chen submitted with its supplemental questionnaire response of November 12, 1996.

D. Level of Trade

As set forth in section 773(a)(1)(B)(i) of the Tariff Act and in the SAA at 829 through 831, to the extent practicable, the Department will calculate NV based on sales at the same level of trade as the U.S. sales. When we are unable to find sales of the foreign like product in the comparison market at the same level of trade as the U.S. sale, we may compare U.S. sales to sales at a different level of trade in the comparison market.

In accordance with section 773(a)(7)(A) of the Tariff Act, if sales at allegedly different levels of trade are compared, we will adjust the NV to account for the difference in levels of trade if two conditions are met. First, there must be differences between the actual selling activities performed by the exporter at the level of trade of the U.S. sale and the level of trade of the comparison market sale used to determine NV. Second, the differences between levels of trade must affect price comparability as evidenced by a pattern of consistent price differences between sales at the different levels of trade in the market in which NV is determined.

In order to determine that there is a difference in level of trade, the Department must find that two sales have been made at different stages of marketing, or the equivalent. Different stages of marketing necessarily involve differences in selling functions, but differences in selling functions (even substantial differences) are not, in and of themselves, sufficient to establish a difference in the level of trade. Similarly, seller and customer descriptions (such as ''distributor'' and ''wholesaler''), while useful in identifying different levels of trade, are insufficient to establish that there is, in fact, a difference in the level of trade.

To implement these principles in this review, we asked Ta Chen to provide detailed information regarding its selling activities/functions at each phase of marketing, and to establish any claimed level of trade based on these activities. In order to determine whether separate levels of trade actually existed within or between the U.S. and home markets, we reviewed the selling activities associated with each phase of marketing claimed by Ta Chen. Pursuant to section 773(a)(1)(B)(i) of the Tariff Act and the SAA at 827, in identifying levels of trade for EP and home market sales we considered the selling functions reflected in the starting price before any adjustments.

We considered all types of selling activities performed by Ta Chen in our review of Ta Chen's questionnaire responses. We found that no single selling function in the pipe industry was sufficient to indicate that a separate level of trade existed (see Notice of Proposed Rulemaking and Request for Public Comments, 61 FR 7307, 7348 (February 27, 1996)). In addition, in determining whether separate levels of trade existed in or between the U.S. and home markets, we analyzed the selling activities associated with the stages of marketing Ta Chen reported and expected the functions and activities of the seller to be similar if, as in the instant review, Ta Chen claimed the levels of trade to be the same.

Ta Chen reported two stages of marketing in the home market (to unrelated distributors and end users) and a single phase of marketing in the United States (to unrelated distributors). With respect to the home market, Ta Chen claimed that its two stages of marketing constituted a single level of trade. Based upon our examination of information supplied by Ta Chen in its original and supplemental questionnaire responses, we agree that only one level of trade existed for Ta Chen in the home market.

For its U.S. sales, Ta Chen reported a single stage of marketing, i.e., distributors. In determining whether, in fact, a single stage of marketing existed, we examined the selling functions as reflected in the starting price to the unaffiliated U.S. customer. While TCI processed the paperwork and provided certain selling functions for the majority of Ta Chen's U.S. sales, the remainder of these sales involved direct contact between the unaffiliated U.S. customer and Ta Chen without TCI's ''facilitation.'' We find preliminarily, however, that TCI provided very limited selling functions for those sales TCI facilitated and, therefore, found no significant differences in selling functions between sales through either channel. As a result, we preliminarily agree with Ta Chen that Ta Chen's EP sales constitute a single level of trade. We have requested additional clarification from Ta Chen on this point, and will incorporate this information in our final results of review.

When we compared Ta Chen's sales at its EP level of trade to its home market level of trade, we found that the record indicated that Ta Chen provided little or no strategic or economic planning, market research, engineering services, advertising, after-sales services, or post-sale warehousing at either the EP or home market level of trade. Ta Chen reported that it provided the ''same'' degree of technical assistance at both the EP and home market level of trade. All packing expenses at either level were borne by Ta Chen; freight and delivery arrangements varied between the two markets in that U.S. movement expenses on certain U.S. sales were incurred by TCI. Based upon our analysis of the selling functions performed by Ta Chen in both markets, the similarities lead us to agree preliminarily that the level of trade of Ta Chen's EP and home market sales is the same.

E. Home Market Price

While we found below-cost home market sales for Ta Chen in this review, Ta Chen's remaining home market sales at or above cost were sufficient to serve as the basis for NV.

We based home market prices on the packed, ex-factory or delivered prices to unaffiliated purchasers in the home market. We made adjustments for differences in packing and for movement expenses in accordance with sections 773(a)(6)(A) and (B) of the Tariff Act. In addition, we made adjustments for differences in cost attributable to differences in physical characteristics of the merchandise pursuant to section 773(a)(6)(C)(ii) of the Tariff Act, and for differences in circumstances of sale (COS) in accordance with section 773(a)(6)(C)(iii) of the Tariff Act and 19 CFR 353.56. We made further adjustments by deducting home market direct selling expenses and adding U.S. direct selling expenses. Finally, where the comparison EP sale involved a commission, we increased home market price by the amount of this commission and subtracted home market indirect selling expenses up to the amount of the U.S. commission, as provided at 19 CFR 353.56(b).

Fair Value Comparison

To determine whether Ta Chen made sales of subject WSSP in the United States at prices that were less than fair value, we compared the EP to NV, as described in the ''United States Price'' and ''Normal Value'' sections of this notice. In accordance with section 777A(d)(2) of the Tariff Act, we calculated monthly weighted-average prices for NV and compared these monthly averages to individual U.S. sales transactions.

Preliminary Results of Review

As a result of our review, we preliminarily determine the weighted-average margin for Ta Chen for the period December 1, 1994 through November 30, 1995 is 2.65 percent.

Parties to these proceedings may request disclosure within five days of the date of publication of this notice and may request a hearing within ten days of publication. Any hearing, if requested, will be held 44 days after the date of publication, or the first business day thereafter. Case briefs and/or written comments from interested parties may be submitted no later than 30 days after the date of publication. Rebuttal briefs and rebuttals to written comments, limited to issues raised in the case briefs and comments, may be submitted no later than 37 days after the date of publication of this notice. Parties who submit arguments in these proceedings are requested to submit with the argument (1) a statement of the issues and (2) a brief summary of the argument. The Department will issue final results of these administrative reviews, including the results of our analysis of the issues in any such written comments or at a hearing, within 180 days of issuance of these preliminary results.

The Department shall determine, and the U.S. Customs Service shall assess, antidumping duties on all appropriate entries. Individual differences between U.S. price and NV may vary from the percentage stated above. The Department will issue appraisement instructions directly to Customs.

Furthermore, the following deposit requirements will be effective upon completion of the final results of this administrative review for all shipments of WSSP from Taiwan entered, or withdrawn from warehouse, for consumption on or after the publication of the final results of this administrative review, as provided in section 751(a)(1) of the Tariff Act:

(1) The cash deposit rate for Ta Chen will be the rate established in the final results of this administrative review;

(2) For previously reviewed or investigated companies other than Ta Chen, the cash deposit rate will

continue to be the company-specific rate published for the most recent period;

(3) If the exporter is not a firm covered in this review, a prior review, or the less-than-fair-value investigation, but the manufacturer is, the cash deposit rate will be the rate established for the most recent period for the manufacturer of the merchandise; and

(4) If neither the exporter nor the manufacturer is a firm covered in this or any previous review conducted by the Department, the cash deposit rate will be 19.84 percent. See Amended Final Determination and Antidumping Duty Order; Certain Welded Stainless Steel Pipe From Taiwan, 57 FR 62300 (December 30, 1992).

All U.S. sales by the respondent Ta Chen will be subject to one deposit rate according to the proceeding. The cash deposit rate has been determined on the basis of the selling price to the first unrelated customer in the United States. For appraisement purposes, where information is available, we will use the entered value of the subject merchandise to determine the appraisement rate.

This notice serves as preliminary reminder to importers of their responsibility to file a certificate regarding the reimbursement of antidumping duties prior to liquidation of the relevant entries during this review period. Failure to comply with this requirement could result in the Secretary's presumption that reimbursement of the antidumping duties occurred and the subsequent assessment of double antidumping duties. This administrative review and this notice are in accordance with section 751(a)(1) of the Tariff Act (19 U.S.C. 1675(a)(1)) and 19 CFR 353.22.

Dated: December 30, 1996.

Robert S. LaRussa,

Acting Assistant Secretary for Import Administration.

[FR Doc. 97–633 Filed 1–9–97; 8:45 am]

BILLING CODE 3510–DS–P

North American Free-Trade Agreement (NAFTA), Article 1904 Binational Panel Reviews; Decision of Binational Panel

AGENCY: NAFTA Secretariat, United States Section, International Trade Administration, Department of Commerce.

ACTION: Notice of decision of Binational Panel.

SUMMARY: On December 16, 1996, the Binational Panel issued its decision in the matter of Fresh Cut Flowers from Mexico, Secretariat File No. USA–95–1904–05.

FOR FURTHER INFORMATION CONTACT: James R. Holbein, United States Secretary, NAFTA Secretariat, Suite 2061, 14th and Constitution Avenue, Washington, D.C. 20230, (202) 482–5438.

SUPPLEMENTARY INFORMATION: Chapter 19 of the North American Free-Trade Agreement (''Agreement'') establishes a mechanism to replace domestic judicial review of final determinations in antidumping and countervailing duty cases involving imports from a NAFTA country with review by independent binational panels. When a Request for Panel Review is filed, a panel is established to act in place of national courts to review expeditiously the final determination to determine whether it conforms with the antidumping or countervailing duty law of the country that made the determination.

Under Article 1904 of the Agreement, which came into force on January 1, 1994, the Government of the United States, the Government of Canada and the Government of Mexico established *Rules of Procedure for Article 1904 Binational Panel Reviews* (''Rules''). These Rules were published in the Federal Register on February 23, 1994 (59 FR 8686). The panel review in this matter was conducted in accordance with these Rules.

Background Information

On October 26, 1995, Rancho El Aguaje, Rancho El Toro and Rancho Guacatay filed a First Request for Panel Review with the U.S. Section of the NAFTA Secretariat pursuant to Article 1904 of the North American Free Trade Agreement. Panel review was requested of the Final Results of Antidumping Duty Administrative Review made by the International Trade Administration respecting Fresh Cut Flowers from Mexico. This determination was published in the Federal Register on September 26, 1995 (60 FR 49569). The request was assigned File No. USA–95–1904–05.

Panel Decision

The Panel decided that the Department properly determined that the Complainants provided misleading and evasive statements concerning their respective tax statuses and that the Department properly invoked BIA given the substantial evidence on the record in this action. However, the first-tier BIA rate imposed by the Department was not justified by substantial evidence on the record and was not otherwise in accordance with law. Based upon the substantial evidence on the record, the Panel remanded the action with instructions to assign a second-tier rate of 18.20 percent, which is taken from the Department's original investigation and takes into account the substantial cooperation provided by the Ranches.

The Panel ordered the Department to issue a determination on remand consistent with the instructions and findings set forth in the Panel's decision. The determination on remand shall be issued within forty-five (45) days of the date of the Order (not later than January 30, 1997).

Dated: December 18, 1996.

James R. Holbein,

U.S. Secretary, NAFTA Secretariat.

[FR Doc. 97–509 Filed 1–9–97; 8:45 am]

BILLING CODE 3510–GT–M

National Oceanic and Atmospheric Administration

Federal Approval of the Texas Coastal Management Program

AGENCY: National Oceanic and Atmospheric Administration, National Ocean Service.

ACTION: Notice of the National Oceanic and Atmospheric Administration, National Ocean Services's approval of the Texas Coastal Management Program pursuant to the Coastal Zone Management Act of 1972, as amended 16 U.S.C. 1451 *et seq.*

SUMMARY: Notice is hereby given that the National Oceanic and Atmospheric Administration (NOAA) approved the Texas Coastal Management Program (TCMP) on December 23, 1996, pursuant to the provisions of section 306 of the Federal Coastal Zone Management Act of 1972, as amended, 16 U.S.C. 1455 (CZMA). The TCMP is described in the Texas Coastal Management Program and Final Environmental Impact Statement (P/FEIS) published in August 1996.

Texas is the 30th state to receive federal approval of its coastal management program and the first state program to be approved by NOAA in ten years. Texas submitted a proposed coastal program to NOAA in October 1995. Upon reaching a preliminary decision that the program met the requirements of the CZMA, and in order to meet its responsibilities under the National Environmental Policy Act, NOAA published the Texas Coastal Management Program and Draft Environmental Impact Statement (P/DEIS) for public review on June 23, 1996. NOAA published the P/FEIS including public comments on the P/DEIS and responses to those comments on August 23, 1996. NOAA has also fulfilled its responsibilities under the Endangered Species Act through

consultations with the U.S. Fish and Wildlife Service and National Marine Fisheries Service.

The TCMP is the culmination of several years of development by the State of Texas, interest groups, the general public, federal agencies, and in consultation with NOAA. The TCMP consists of numerous state policies on diverse coastal management issues which are prescribed by statute and other legal mechanisms and made enforceable under state law. The TCMP will improve the decision making process for determining appropriate coastal land and water uses in light of resource consideration and increase public awareness of coastal resources and processes. The TCMP will increase long term protection of the state's coastal resources, while providing for sustainable economic development.

NOAA approval of the TCMP makes the state eligible for federal financial assistance for program administration and enhancement under sections 306, 306A, 308 and 309 of the CZMA (16 U.S.C. §§ 1455, 1455a, 1456a, and 1456b). Texas has submitted an application for $800,000 in FY 1996 Federal CZMA funds which are available to Texas. These funds will generally be used to assist the state administer the various state and local authorities included in the TCMP as well as be used to fund local management efforts to increase public access, restore damaged resources and manage coastal erosion.

NOAA approval of the TCMP also makes operational, as of the date of this Federal Register notice, the CZMA federal consistency requirement with respect to the TCMP (16 U.S.C. 1456; 15 CFR part 930). Therefore, as of today, direct federal activities occurring within or outside the Texas Coastal Zone that are reasonably likely to affect any land or water use or natural resources of the Texas Coastal Zone must be consistent to the maximum extent practicable with the enforceable policies of the TCMP. In addition, activities within or outside the Texas Coastal Zone requiring a federal license or permit listed in the P/FEIS, and federal financial assistance to state agencies and local governments that are reasonably likely to affect any land or water use or natural resource of the Texas Coastal Zone must be consistent with the enforceable policies of the TCMP.

Chapter 4 and Appendix C1 of the P/FEIS identify the enforceable policies of the Texas program. Chapter 5 and Appendix C4 of the P/FEIS identify federally licensed or permitted activities subject to the federal consistency requirements. Chapter 5 and Appendix C4 of the P/FEIS, as well as the CZMA regulations at 15 CFR part 930, provide specific procedures to be used in the Federal/State coordination process.

For further information please contact Bill O'Beirne at (301) 713–3109, ext. 160; or via fax at (301) 713–4367; or via the Internet at <bobeirne@coasts.nos.noaa.gov>.

(Federal Domestic Assistance Catalog 11.419 Coastal Zone Management Program Administration)

David L. Evans,

Deputy Assistant Administrator for Ocean Service and Coastal Zone Management.

[FR Doc. 97–457 Filed 1–9–97; 8:45 am]

BILLING CODE 3510–08–M

[I.D. 123096A]

Marine Mammals; Permit No. 738 (P77#51)

AGENCY: National Marine Fisheries Service (NMFS), National Oceanic and Atmospheric Administration (NOAA), Commerce.

ACTION: Issuance of amendment.

SUMMARY: Notice is hereby given that permit no. 738, issued to The Southeast Fisheries Science Center, National Marine Fisheries Service, 75 Virginia Beach Drive, Miami, Florida 33149, was amended to extend the expiration date until June 30, 1997.

ADDRESSES: The amendment and related documents are available for review upon written request or by appointment in the following offices:

Permits Division, Office of Protected Resources, NMFS, 1315 East-West Highway, Room 13130 Silver Spring, MD 20910 (301/713–2289); and

Regional Administrator, Southeast Region, NMFS, 9721 Executive Center Drive North, St. Petersburg, FL 33702–2432.

SUPPLEMENTARY INFORMATION: The subject amendment has been issued under the authority of the Marine Mammal Protection Act of 1972, as amended (16 U.S.C. 1361 *et seq.*), the provisions of § 216.39 of the Regulations Governing the Taking and Importing of Marine Mammals (50 CFR part 216), the Endangered Species Act of 1973, as amended (ESA; 16 U.S.C. 1531 *et seq.*), and the provisions of § 222.25 of the regulations governing the taking, importing, and exporting of endangered fish and wildlife (50 CFR part 222).

Issuance of this permit as required by the ESA was based on a finding that such permit: (1) Was applied for in good faith; (2) will not operate to the disadvantage of the endangered species which is the subject of this permit; and (3) is consistent with the purposes and policies set forth in section 2 of the ESA.

Dated: December 26, 1996.

Ann D. Terbush,

Chief, Permits and Documentation Division, Office of Protected Resources, National Marine Fisheries Service.

[FR Doc. 97–589 Filed 1–9–97; 8:45 am]

BILLING CODE 3510–22–F

DEPARTMENT OF DEFENSE

Office of the Secretary of Defense

Department of Defense Wage Committee; Notice of Closed Meetings

Pursuant to the provisions of section 10 of Public Law 92–463, the Federal Advisory Committee Act, notice is hereby given that closed meetings of the Department of Defense Wage Committee will be held on February 4, 1997; February 11, 1997; February 18, 1997; and February 25, 1997; at 10:00 a.m. in Room A105, The Nash Building, 1400 Key Boulevard, Rosslyn, Virginia.

Under the provisions of section 10(d) of Public Law 92–463, the Department of Defense has determined that the meetings meet the criteria to close meetings to the public because the matters to be considered are related to internal rules and practices of the Department of Defense and the detailed wage data to be considered were obtained from officials of private establishments with a guarantee that the date will be held in confidence.

However, members of the public who may wish to do so are invited to submit material in writing to the chairman concerning matters believed to be deserving of the Committee's attention.

Additional information concerning the meetings may be obtained by writing to the Chairman, Department of Defense Wage Committee, 4000 Defense Pentagon, Washington, DC 20301–4000.

Dated: January 6, 1997.

L.M. Bynum,

Alternate OSD Federal Register Liaison Officer, Department of Defense.

[FR Doc. 97–533 Filed 1–9–97; 8:45 am]

BILLING CODE 5000–04–M

Department of the Air Force

Active Duty Service Determination for Civilian or Contractual Groups

On December 24, 1996, the Secretary of the Air Force determined that the service of the group known as ''All U.S. Civilians of the American Field Service, who served Overseas Operationally

From April 6, 1917, to January 1918, and November 10, 1941, to August 1945'' shall not be considered ''active duty'' under the provisions of Public Law 95–202 for the purposes of all laws administered by the Department of Veterans Affairs (VA).

Patsy J. Conner,

Air Force Federal Register Liaison Officer.

[FR Doc. 97–648 Filed 1–9–97; 8:45 am]

BILLING CODE 3910–01–M

Department of the Navy

Notice of Public Scoping Meetings for the Environmental Impact Statement for Developing Homeport Facilities for Three Nimitz-Class Aircraft Carriers in Support of the United States Pacific Fleet

SUMMARY: The Department of the Navy announced its intent to prepare this Environmental Impact Statement (EIS) and open scoping in the Federal Register on December 3, 1996 and also mailed the announcement to interested parties. This notice is to announce the public scoping meetings.

The scope of the proposed actions is to: (1) determine the appropriate home port for two nuclear-powered aircraft carriers (CVNs) that will replace two conventionally-powered aircraft carriers (CVs) that are currently homeported at Naval Air Station (NAS) North Island in the Naval Complex San Diego, CA, and (2) reevaluate the current location of one CVN homeport at Naval Station (NAVSTA) Everett in order to increase efficiency of support infrastructure, maintenance, and repair capabilities, to reduce costs, and to enhance crew quality of life. Decisions for facilities development need to be made as soon as possible to accommodate planned arrival schedules of the CVNs to the Pacific Fleet (one as early as 2001) and to gain infrastructure benefits prior to upcoming ship maintenance periods (commencing in 1999).

There are three major U.S. areas of Navy concentration in the Pacific: San Diego, CA complex; Puget Sound, WA complex; and Pearl Harbor, HI complex. Naval Air Station (NAS) North Island in the San Diego Naval Complex and Puget Sound Naval Shipyard (PSNS) Bremerton and NAVSTA Everett in the Pacific Northwest are currently designated as CVN home ports. All three locations will be considered as alternative locations for the proposed actions. Although not currently designated as a CVN home port, Pearl Harbor is capable of accommodating deep-draft ships and will also be evaluated as a potential home port.

The EIS will analyze the potential environmental effects of the proposed actions at the alternative locations discussed above, including any associated facilities development and dredging, and other reasonable alternatives identified during the public scoping process. Environmental issues to be addressed in the EIS include: geology, topography, and soils; dredging, hydrology, and water quality; pollution prevention; biology and natural resources; noise; air quality; land use; historic and archaeological resources; socioeconomics, schools, and housing; transportation/circulation/parking; public facilities and recreation; safety and environmental health; aesthetics; utilities; and environmental justice. Issue analysis will include an evaluation of the direct, indirect, short-term, and cumulative impacts associated with the proposed actions. No decision to implement the proposed actions will be made until the NEPA process is complete.

ADDRESSES: The Department of the Navy has initiated a scoping process for the purpose of determining the scope of issues to be addressed and for identifying significant issues relative to these proposed actions. Public meetings to receive oral comments from the public will be held in the four primary areas of consideration (San Diego, CA; Bremerton, WA; Everett, WA; and Honolulu, HI). The dates and locations of these meetings are as follows: Bremerton, WA: February 3, 1996, 7:00 pm, Bremerton High School, 1500 13th Street, Bremerton, WA; Everett, WA: February 4, 1996, 7:00 pm, Snohomish County Administration/Courthouse Building, 3000 Rockefeller, Everett, WA; Pearl Harbor, HI: February 6, 1996, 7:00 pm, Farrington High School, 1564 North King Street, Honolulu, HI; Coronado, CA: February 11, 1996, 7:00 pm, Village Hall, Village Elementary School, 600 6th Street, Coronado, CA. These meetings will also be announced in local area newspapers. Navy representatives will be available at the scoping meetings to receive comments from the public regarding issues of concern. A brief presentation describing the proposed actions and the NEPA process will precede a request for public comments. It is important that federal, state, and local agencies, as well as interested organizations and individuals, take this opportunity to identify environmental concerns that they feel should be addressed during the preparation of the EIS. Oral comments will be limited to three minutes. Agencies and the public are invited and encouraged to provide written comments in addition to, or in lieu of, oral comments at the public meetings. To be most helpful, scoping comments should clearly describe specific issues or topics that the commenter believes the EIS should address. Written comments or questions regarding the scoping process and/or the EIS should be postmarked no later than February 28, 1997 and sent to the following address.

FOR FURTHER INFORMATION CONTACT: Mr. Dan Muslin (Code 03PL), Southwest Division, Naval Facilities Engineering Command, 1220 Pacific Highway, San Diego, CA 92132–5190; telephone (619) 532–3403.

Dated: Janaury 7, 1997.

D.E. Koenig,

LCDR, JAGC, USN, Federal Register Liaison Officer.

[FR Doc. 97–596 Filed 1–9–97; 8:45 am]

BILLING CODE 3810–FF–M

DEPARTMENT OF EDUCATION

National Assessment Governing Board; Meeting

AGENCY: National Assessment Governing Board; ED.

ACTION: Notice of closed meeting.

SUMMARY: This notice sets forth the schedule and proposed agenda of a forthcoming meeting of the Nominations Committee of the National Assessment Governing Board. This notice also describes the functions of the Board. Notice of this meeting is required under Section 10(a)(2) of the Federal Advisory Committee Act.

DATES: February 11, 1997.

TIME: 8:30 a.m.–12:00 p.m.

LOCATION: The Brown Palace Hotel, 321 Seventeenth Street, Denver, Colorado.

FOR FURTHER INFORMATION CONTACT: Mary Ann Wilmer, Operations Officer, National Assessment Governing Board, Suite 825, 800 North Capitol Street, NW., Washington, DC 20002–4233, Telephone: (202) 357–6938.

SUPPLEMENTARY INFORMATION: The National Assessment Governing Board is established under section 412 of the National Education Statistics Act of 1994 (Title IV of the Improving America's Schools Act of 1994), (Pub. L. 103–382).

The Board is established to formulate policy guidelines for the National Assessment of Educational Progress. The Board is responsible for selecting subject areas to be assessed, developing assessment objectives, identifying appropriate achievement goals for each grade and subject tested, and

establishing standards and procedures for interstate and national comparisons.

On February 11, 1997, between the hours of 8:30 a.m. and 12:00 p.m. there will be discussing the qualifications of nominees for vacancies in the membership of the National Assessment Governing Board. The review and subsequent discussions of this information relate solely to the internal personnel rules and practices of an agency and will disclose information of a personal nature where disclosure would constitute a clearly unwarranted invasion of personal privacy if conducted in open session. Such matters are protected by exemptions (2) and (6) of Section 552b(c) of Title 5 U.S.C.

A summary of the activities of the meeting and related matters, which are informative to the public, consistent with the policy of 5 U.S.C., 552b, will be available to the public within fourteen days after the meeting.

Records are kept of all Board proceedings and are available for public inspection at the U.S. Department of Education, National Assessment Governing Board, Suite 825, 800 North Capitol Street, NW., Washington, DC, from 8:30 a.m. to 5:00 p.m.

Dated: January 7, 1997.

Roy Truby,

Executive Director, National Assessment Governing Board.

[FR Doc. 97–581 Filed 1–9–97; 8:45 am]

BILLING CODE 4000–01–M

DEPARTMENT OF ENERGY

[Docket Nos. EA–135 and EA–136]

Applications to Export Electric Energy; Newco US, L.P.

AGENCY: Office of Fossil Energy, DOE.

ACTION: Notice of application.

SUMMARY: Newco US, L.P. (Newco), a limited partnership, has submitted an application to export electric energy to Mexico and Canada pursuant to section 202(e) of the Federal Power Act.

DATES: Comments, protests or requests to intervene must be submitted on or before February 10, 1997.

ADDRESSES: Comments, protests or requests to intervene should be addressed as follows: Office of Coal & Power Im/Ex (FE–52), Office of Fossil Energy, U.S. Department of Energy, 1000 Independence Avenue, SW., Washington, DC 20585 (FAX 202–287–5736).

FOR FURTHER INFORMATION CONTACT: Xavier Puslowski (Program Office) 202–586–4708 or Michael Skinker (Program Attorney) 202–586–6667.

SUPPLEMENTARY INFORMATION: Exports of electricity from the United States to a foreign country are regulated and require authorization under section 202(e) of the Federal Power Act (FPA) (16 U.S.C. 824a(e)).

On November 29, 1996, Newco filed two applications with the Office of Fossil Energy (FE) of the Department of Energy (DOE) for authorization to export electric energy to Mexico (Docket EA–135) and Canada (Docket EA–136), as a power marketer, pursuant to section 202(e) of the FPA.[1] Specifically, Newco has proposed to transmit to Mexico and Canada electric energy purchased from electric utilities and federal power marketing agencies.

Newco would arrange for the exported energy to be transmitted to Mexico over one or more of the following international transmission or subtransmission lines for which Presidential permits (PP) have been previously issued:

Owner	Location	Voltage	Presidential permit No.
San Diego Gas & Elect.	Miguel, CA	230 KV	PP–68
	Imperial Valley, CA	230 KV	PP–79
El Paso Electric	Diablo, NM	115 KV	PP–92
	Ascarate, TX	115 KV	PP–48
Central Power and Light	Brownsville, TX	138 KV	PP–94
		69 KV	PP–94
Comision Federal de Electricidad	Eagle Pass, TX	138 KV	PP–50
	Laredo, TX	138 KV	PP–57
	Falcon Dam, TX	138 KV	PP–57

Newco would arrange for the exported energy to be transmitted to Canada over one or more of the following international transmission or subtransmission lines for which Presidential permits (PP) have been previously issued:

Owner	Location	Voltage	Presidential permit No.
Basin Electric	Tioga, ND	230-kV	PP–64
Bonneville Power Administration	Blaine, WA	2–500-kV	PP–10
	Nelway, WA	230-kV	PP–36
	Nelway, WA	230-kV	PP–46
Citizens Utilities	Derby Line, VT	120-kV	PP–66
Detroit Edison	St. Clair, MI	345-kV	PP–38
	Maryville, MI	230-kV	PP–21
	Detroit, MI	230-kV	PP–21
	St. Clair, MI	345-kV	PP–58
Eastern Maine Elect. Coop	Calais, ME	69-kV	PP–32
Joint Owners of Highgate Project	Highgate, VT	345-kV [2]	PP–82
Maine Electric Power Co	Houlton, ME	345-kV	PP–43
Maine Public Service Co	Limestone, ME	69-kV	PP–12
	Fort Fairfield, ME	69-kV	PP–12
	Aroostook County, ME	138-kV	PP–29
	Madawaska, ME	2–69–kV	PP–29
Minnesota Power and Light Co	International Falls, MN	115-kV	PP–78

[1] Newco is a limited partnership in which Westcoast Power Marketing, Inc. and Coastal Gas Services Company each owns indirectly a 49.5% limited partnership interest, and Newco US, Inc. owns a 1% general partnership interest.

Owner	Location	Voltage	Presidential permit No.
Minnkota Power	Roseau County, MN	230-kV	PP–61
New York Power Authority	Massena, NY	765-kV	PP–56
	Massena, NY	2–230–kV	PP–25
	Niagara Falls, NY	2–345–kV	PP–74
	Devils Hole, NY	230-kV	PP–30
Niagara Mohawk Power Corp	Devils Hole, NY	230-kV	PP–31
Northern States Power	Red River, ND	230-kV	PP–45
	Roseau County, MN	500-kV	PP–63
Vermont Electric Transmission Co	Norton, VT	±450-kV DC	PP–76

[2] These facilities were constructed at 345-kV but operated at 120-kV.

As noted above, Newco proposes to export electricity to Mexico over lines owned and operated by the El Paso Electric Company (EPE) and permitted under Presidential Permits Nos. PP–48, as amended, and PP–92. On October 29, 1996, the Secretary of Energy signed Delegation Order No. 0204–163 which delegated and assigned to the Federal Energy Regulatory Commission (FERC) authority to carry out such functions vested in the Secretary to regulate access to, and the rates, terms and conditions for, transmission services over the facilities of EPE. This authority was delegated to FERC for the sole purpose of authorizing FERC to take any actions necessary to effectuate open access transmission over the United States portion of EPE's electric transmission lines connecting the Diablo and Ascarate substations in the United States with the Insurgentes and Riverena substations in Mexico. Notice and a copy of the Delegation Order were published in the Federal Register on November 1, 1996, at 61 FR 56525.

PROCEDURAL MATTERS: Any persons desiring to become a party to this proceeding or to be heard by filing comments or protests to this application should file a petition to intervene, comment or protest at the address provided above in accordance with §§ 385.211 or 385.214 of the FERC's Rules of Practice and Procedures (18 CFR 385.211, 385.214). Fifteen copies of such petitions and protests should be filed with the DOE on or before the date listed above. Comments on Newco's request to export to Mexico should be clearly marked with Docket EA–135. Comments on Newco's request to export to Canada should be clearly marked with Docket EA–136. Additional copies are to be filed directly with: Jeffrey D. Watkiss; Sarah G. Novosel, Bracewell and Patterson, L.L.P., 2000 K St., NW, Suite 500; Washington, DC 20006, Fax: (202) 223–1225 *and* Peter Leier, Westcoast Power Marketing, Inc., 421–7th Avenue, SW., Suite 1100, Calgary, Alberta, Canada, 728 4K9 *and* Laurence C. Mosher, Jr., Fulbright & Jaworski, L.L.P., 1301 McKinney, Suite 5100, Houston, TX 77010–3095, Fax (713) 651–5246).

A final decision will be made on these applications after the environmental impacts have been evaluated pursuant to the National Environmental Policy Act of 1969 (NEPA), and a determination is made by the DOE that the proposed actions will not adversely impact on the reliability of the U.S. electric power supply system.

Copies of these applications will be made available, upon request, for public inspection and copying at the address provided above.

Issued in Washington, DC on January 2, 1997.

Anthony J. Como,

Manager, Electric Power Regulation, Office of Coal & Power Systems, Office of Fossil Energy.

[FR Doc. 97–594 Filed 1–9–97; 8:45 am]

BILLING CODE 6450–01–P

Environmental Management Site-Specific Advisory Board, Savannah River Site

AGENCY: Department of Energy.

ACTION: Notice of open meeting.

SUMMARY: Pursuant to the provisions of the Federal Advisory Committee Act (Public Law 92–463, 86 Stat. 770) notice is hereby given of the following Advisory Committee meeting: Environmental Management Site-Specific Advisory Board (EM SSAB), Savannah River Site.

DATES AND TIMES:

Monday, January 27, 1997:
- 6:00 p.m.–6:30 p.m. (Joint Meeting of Issues-based Committee Chairs)
- 6:30 p.m.–7:00 p.m. (Public Comment Session)
- 7:00 p.m.–9:00 p.m. (Subcommittee Meetings

Tuesday, January 28, 1997: 8:30 a.m.–4:00 p.m.

ADDRESSES: The Hilton, Palmetto Dunes, Hilton Head Island, South Carolina.

FOR FURTHER INFORMATION CONTACT: Gerri Flemming, Public Accountability Specialist, Environmental Restoration and Solid Waste Division, Department of Energy Savannah River Operations Office, P.O. Box A, Aiken, S.C. 29802 (803) 725–5374.

SUPPLEMENTARY INFORMATION:

Purpose of the Board: The purpose of the Board is to make recommendations to DOE and its regulators in the areas of environmental restoration, waste management and related activities.

Tentative Agenda:

Monday, January 27, 1997

6:00 p.m.—Joint meeting of issues-based subcommittee chairs
6:30 p.m.—Public comment session (5-minute rule)
7:00 p.m.—Subcommittee meetings
9:00 p.m.—Adjourn

Tuesday, January 28, 1997

8:30 a.m.
- Approval of minutes, agency updates (~ 15 minutes)
- Public comment session (5-minute rule) (~ 15 minutes)
- Facilitator update and review of recommendations (~ 1 hour)
- Election of subcommittee chairs and administrative subcommittee report and proposal to amend bylaws (~ 1 hour 15 minutes)
- Spent fuel forum update (~ 15 minutes)
- Nuclear materials management subcommittee report (~ 30 minutes)

12:00 p.m.—Lunch
1:00 p.m.
- Cancer registry presentation (~ 30 minutes)
- Allied General Nuclear Services presentation (~ 30 minutes)
- Environmental restoration and waste management subcomittee report (~ 1 and half hours)
- —Riverwater shutdown system environmental impact statement
- —Russian melter
- —F/H groundwater phase I and II

4:00 p.m.—Adjourn

If necessary, time will be allotted after public comments for items added to the agenda, and administrative details. A final agenda will be available at the meeting Monday, January 27, 1997.

Public Participation: The meeting is open to the public. Written statements may be filed with the Committee either before or after the meeting. Individuals who wish to make oral statements pertaining to agenda items should contact Gerri Flemming's office at the address or telephone number listed above. Requests must be received 5 days prior to the meeting and reasonable provision will be made to include the presentation in the agenda.

The Designated Federal Official is empowered to conduct the meeting in a fashion that will facilitate the orderly conduct of business. Each individual wishing to make public comment will be provided a maximum of 5 minutes to present their comments.

Minutes: The minutes of this meeting will be available for public review and copying at the Freedom of Information Public Reading Room, 1E–190, Forrestal Building, 1000 Independence Avenue, SW, Washington, DC 20585 between 9:00 a.m. and 4 p.m., Monday–Friday except Federal holidays. Minutes will also be available by writing to Gerri Flemming, Department of Energy Savannah River Operations Office, P.O. Box A, Aiken, S.C. 29802, or by calling her at (803) 725–5374.

Issued at Washington, DC on January 5, 1997.

Rachel M. Samuel,

Acting Deputy Advisory Committee Management Officer.

[FR Doc. 97–595 Filed 1–9–97; 8:45 am]

BILLING CODE 6450–01–P

Federal Energy Regulatory Commission

[Docket No. RP97–222–000]

ANR Pipeline Company; Notice of Proposed Changes in FERC Gas Tariff

January 6, 1997.

Take notice that on December 31, 1996, ANR Pipeline Company (ANR), tendered for filing as part of its FERC Gas Tariff, Second Revised Volume No. 1, the tariff sheets listed in Attachment A to the filing, to be effective February 1, 1997.

ANR states that the referenced tariff sheets are being submitted as part of ANR's Eighth Annual Reconciliation of Order Nos. 500/528 buyout buydown costs being recovered by means of Volumetric Buyout Buydown Surcharges contained in Docket Nos. RP91–33, et al., RP91–192, RP92–4, RP92–199, RP93–29, RP93–149, RP96–10, and RP96–328, and Fixed Monthly Charges associated with Docket Nos. RP96–10, and RP96–328.

With respect to the Volumetric Buyout Buydown Surcharges, the proposed charges are designed to recover $3.2 million less on an annual basis than the currently effective volumetric surcharge. This decrease is due to lower interest on decreasing principal. With respect to Fixed Monthly Charges, the proposed charges are designed to recover $32,868 less on a monthly basis than the currently effective Fixed Monthly Charges.

Any person desiring to be heard or to protest this filing should file a motion to intervene or protest with the Federal Energy Regulatory Commission, 888 First Street, N.E., Washington, D.C. 20426 in accordance with Sections 385.214 and 385.211 of the Commission's Rules and Regulations. All such motions or protests must be filed as provided in Section 154.210 of the Commission's regulations. Protests will be considered by the Commission in determining the appropriate action to be taken, but will not serve to make protestants parties to the proceeding. Any person wishing to become a party must file a motion to intervene. Copies of this application are on file with the Commission and are available for public inspection in the Public Reference Room.

Linwood A. Watson, Jr.,

Acting Secretary.

[FR Doc. 97–544 Filed 1–9–97; 8:45 am]

BILLING CODE 6717–01–M

[Docket No. RP97–217–000]

Colorado Interstate Gas Company; Notice of Proposed Changes in FERC Gas Tariff

January 6, 1997.

Take notice that on December 31, 1996, Colorado Interstate Gas Company (CIG), tendered for filling to become part of its FERC Gas Tariff, First Revised Volume No. 1 and Second Revised Volume No. 2, the tariff sheets listed on Appendix A to the filing, to be effective December 31, 1996.

CIG states that the purpose of this compliance filing is to conform CIG's tariff to the requirements of Order No. 582.

CIG further states that copies of this filing have been served on CIG's jurisdictional customers and public bodies.

Any person desiring to be heard or to make any protest with reference to said filing should file a motion to intervene or protest with the Federal Energy Regulatory Commission, 888 First Street N.E., Washington, DC 20426, in accordance with the Sections 385.214 or 385.211 of the Commission's Rules of Practice and Procedure. All such motions or protests must be filed in accordance with Section 154.210 of the Commission's Regulations. Protests filed with the Commission will be considered by it in determining the appropriate action to be taken, but will not serve to make the protestants parties to the proceedings. Any person wishing to become a party must file a petition to intervene. Copies of the filing are on file with the Commission and are available for public inspection.

Linwood A. Watson, Jr.,

Acting Secretary.

[FR Doc. 97–549 Filed 1–9–97; 8:45 am]

BILLING CODE 6717–01–M

[Docket No. CP97–165–000]

Colorado Interstate Gas Company; Notice of Request Under Blanket Authorization

January 7, 1997.

Take notice that on December 20, 1996, Colorado Interstate Gas Company (CIG), P.O. Box 1087, Colorado Springs, Colorado 80944, filed in Docket No. CP97–165–000 a request pursuant to Sections 157.205 and 157.211 of the Commission's Regulations under the Natural Gas Act (18 CFR 157.205, 157.211) for authorization to establish a new delivery point for Public Service Company of Colorado (PSCo), under CIG's blanket certificate issued in Docket No. CP83–21–000 pursuant to Section 7 of the Natural Gas Act, all as more fully set forth in the request that is on file with the Commission and open to public inspection.

CIG states that during the summer of 1996, it constructed approximately 21 miles of 12-inch-diameter (Indian Creek Lateral) and installed two 1478 horsepower compressors (Big Canyon Compressor Station) in Potter County, Texas pursuant to the provisions of Section 311 of the Natural Gas Policy Act (NGPA) and the Commission's regulations under the NGPA. CIG states that these facilities have been used as receipt facilities to receive gas for the account of PSCo, a local distribution company, for transportation to their distribution system.

CIG states that it received a request from PSCo requesting CIG to establish a certificated delivery point (Nichols Delivery Point) off its Indian Creek Lateral. CIG states that PSCo will use

the Nichols Delivery Point to deliver gas to Southwestern Public Service Company. CIG states the new delivery point could deliver up to 110,000 Mcf of natural gas per day.

Any person or the Commission's staff may, within 45 days after issuance of the instant notice by the Commission, file pursuant to Rule 214 of the Commission's Procedural Rules (18 CFR 385.214) a motion to intervene or notice of intervention and pursuant to Section 157.205 of the Regulations under the Natural Gas Act (18 CFR 157.205) a protest to the request. If no protest is filed within the time allowed therefor, the proposed activity shall be deemed to be authorized effective the day after the time allowed for filing a protest. If a protest is filed and not withdrawn within 30 days after the time allowed for filing a protest, the instant request shall be treated as an application for authorization pursuant to Section 7 of the Natural Gas Act.

Linwood A. Watson, Jr.,

Acting Secretary.

[FR Doc. 97–597 Filed 1–9–97; 8:45 am]

BILLING CODE 6717–01–M

[Docket No. CP97–170–000]

Colorado Interstate Gas Company; Notice of Request Under Blanket Authorization

January 7, 1997.

Take notice that on December 27, 1996, Colorado Interstate Gas Company (CIG), P.O. Box 1087, Colorado Springs, Colorado 80944 filed in Docket No. CP97–170–000 a request pursuant to Sections 157.205, and 157.211 of the Commission's Regulations under the Natural Gas Act (18 CFR 157.205 and 157.211) for approval and permission to construct a delivery facility, under the blanket certificate issued in Docket No. CP83–21–000, pursuant to Section 7(c) of the Natural Gas Act (NGA), all as more fully set forth in the request which is on file with the Commission and open to public inspection.

CIG states that it proposes to construct a point of delivery to be located in Las Animas County, Colorado. CIG further states that the facility will consist of a two-inch meter run and facilities appurtenant thereto for the delivery of natural gas to Consolidated Industrial Service (Consolidated), a producer, for start up fuel gas for Consolidated's compression facility. CIG asserts that the new facility will be capable of delivering up to 1,000 Mcf per day.

Any person or the Commission's Staff may, within 45 days after the issuance of the instant notice by the Commission, file pursuant to Rule 214 of the Commission's Rules of Practice and Procedure (18 CFR 385.214), a motion to intervene or notice of intervention and pursuant to Section 157.205 of the Regulations under the Natural Gas Act (18 CFR 157.205), a protest to the request. If no protest is filed within the time allowed therefor, the proposed activities shall be deemed to be authorized effective the day after the time allowed for filing a protest. If a protest is filed and not withdrawn 30 days after the time allowed for filing a protest, the instant request shall be treated as an application for authorization pursuant to Section 7 of the Natural Gas Act.

Linwood A. Watson, Jr.,

Acting Secretary.

[FR Doc. 97–598 Filed 1–9–97; 8:45 am]

BILLING CODE 6717–01–M

[Docket No. RP97–219–000]

Columbia Gas Transmission Corporation; Notice of Filing of Request for Waiver

January 6, 1997.

Take notice that on December 31, 1996, Columbia Gas Transmission Corporation (Columbia) filed a letter requesting that it be permitted to defer filing any additional Stranded Facilities Charge (SFC) Adjustment Filings while a settlement submitted in its Docket No. RP95–408 remains pending. General Terms and Conditions (GTC) Section 46 of Columbia's tariff contains Columbia's SFC mechanism. Columbia filed its SFC tariff provision and initial SFC as part of its August 1, 1996 general rate case filing in Docket No. RP95–408. GTC Section 46 provides for Columbia's recovery of certain ''Stranded Facilities Costs'' and requires Columbia to restate the SFC twice a year (Adjustment Filings) to be effective each February 1 and August 1.

On November 22, 1996, Columbia filed an Offer of Settlement (Settlement) in Docket No. RP95–408, pursuant to Rule 602 of the Commission's Rules of Practice and Procedure, 18 CFR 385.602, which provides for the disposition of the outstanding SFC issues. Article III, Section C of that Settlement specifically states that the charge for the SFC shall remain at the current level through December 31, 1997. By a separate filing, Columbia is today seeking to place into effect the rates established under the Settlement, including the SFC, on an interim basis effective February 1, 1997, while the Settlement remains pending. In light of the fact that the SFC will be modified by the Settlement, as well as the fact that Columbia is seeking to implement the Settlement rates on an interim basis, Columbia is seeking a waiver of GTC Section 46.2(b) of its tariff to defer any additional Adjustment Filings pursuant to Section 46 while the above-referenced Settlement remains pending.

Any person desiring to be heard or to protest said filing should file a motion to intervene or protest with the Federal Energy Regulatory Commission, 888 First Street, NE, Washington, DC 20426, in accordance with Sections 385.211 and 385.214 of the Commission's Rules and Regulations. All such protests must be filed on or before January 13, 1997. Protests will be considered by the Commission in determining the appropriate action to be taken, but will not serve to make protestants parties to the proceeding. Copies of this filing are on file with the Commission and are available for public inspection in the Public Reference Room.

Linwood A. Watson, Jr.,

Acting Secretary.

[FR Doc. 97–547 Filed 1–9–97; 8:45 am]

BILLING CODE 6717–01–M

[Docket No. RP95–408–014]

Columbia Gas Transmission Corporation; Notice of Proposed Changes in FERC Gas Tariff

January 6, 1997.

Take notice that on December 31, 1996, Columbia Gas Transmission Corporation (Columbia) tendered for filing as part of its FERC Gas Tariff, Second Revised Volume No. 1, the tariff sheets set forth on Appendix A to the filing, to become effective February 1, 1997.

Columbia states that on November 22, 1996, it filed an Offer of Settlement (Settlement) in this proceeding and in several other dockets. In submitting the Settlement, Columbia represented that it would seek Commission authorization to move the Settlement rates into effect pending evaluation of the Settlement by the Presiding Administrative Law Judge and the Commission.

Columbia states further that the Settlement is supported, or not opposed, by all of Columbia's customers, as well as other parties of interest, including producers, industrial users, and representatives of consumer interests at the State level. Accordingly, the filing seeks to move the Settlement rates into effect on February 1, 1997, as to all customers. Columbia states that it is submitting this request at the urging of its customers, who desire to realize the

benefits of their bargain as soon as possible.

Any person desiring to protect this filing should file a protest with the Federal Energy Regulatory Commission, 888 First Street, NE., Washington, DC 20426, in accordance with Section 385.211 of the Commission's Rules and Regulations. All such protest must be filed in accordance with Section 154.210 of the Commission's Regulations. Protests will be considered by the Commission in determining the appropriate action to be taken, but will not serve to make protestants parties to the proceeding. Copies of this filing are on file with the Commission and are available for public inspection in the Public Reference Room.

Linwood A. Watson, Jr.,

Acting Secretary.

[FR Doc. 97–555 Filed 1–9–97; 8:45 am]

BILLING CODE 6717–01–M

[Docket Nos. TQ97–4–23–000 and TM97–7–23–000]

Eastern Shore Natural Gas Company; Notice of Proposed Changes In FERC Gas Tariff

January 6, 1997.

Take notice that on December 31, 1996 Eastern Shore Natural Gas Company (ESNG) tendered for filing certain revised tariff sheets in the above captioned docket as part of its FERC Gas Tariff, First Revised Volume No. 1, with a proposed effective date of February 1, 1997.

ESNG states that the revised tariff sheets included herein are being filed pursuant to Sections 21 and 23 of the General Terms and Conditions of ESNG's Gas Tariff to reflect changes in ESNG's jurisdictional rates. The sales rates set forth herein reflect a decrease of $0.4057 per dt in the Demand Charge and a decrease of $0.6870 per dt in the Commodity Charge, as measured against ESNG's Out-Of-Cycle Quarterly PGA filing, Docket No. TQ97–3–23–000, et al., filed on December 27, 1996 to be effective on January 1, 1997.

ESNG states that copies of the filing have been served upon its jurisdictional customers and interested State Commissions.

Any person desiring to be heard or to protest said filing should file a motion to intervene or protest with the Federal Energy Regulatory Commission, 888 First Street, N.E., Washington, D.C. 20426, in accordance with Rule 211 and Rule 214 of the Commission's Rules of Practice and Procedure (18 CFR § 385.211 and § 385.214). All such motions or protests must be filed in accordance with § 154.210 of the Commission's Regulations. Protests will be considered by the Commission in determining the appropriate action to be taken, but will not serve to make protestants parties to the proceeding. Any person wishing to become a party must file a motion to intervene. Copies of this filing are on file with the Commission and are available for public inspection.

Linwood A. Watson, Jr.,

Acting Secretary.

[FR Doc. 97–539 Filed 1–9–97; 8:45 am]

BILLING CODE 6717–01–M

[Docket No. TQ97–3–23–001]

Eastern Shore Natural Gas Company; Notice of Proposed Changes in FERC Gas Tariff

January 6, 1997.

Take notice that on December 31, 1996 Eastern Shore Natural Gas Company (ESNG) tendered for filing certain revised tariff sheets in the above captioned docket as part of its FERC Gas Tariff, First Revised Volume No. 1, with a proposed effective date of January 1, 1997.

On December 26, 1996, ESNG filed with the Commission revised rates to reflect an out-of-cycle purchased gas adjustment, proposed to be effective January 1, 1997. The instant filing is being made in compliance with a FERC Order dated December 20, 1996 which sited incorrect pagination of tariff sheets found in Docket Nos. TQ97–2–23–000, et. al., and TM97–6–23–000, et. al. The incorrect pagination carried forward to Docket No. TQ97–3–23–000, et. al., and the sheets filed in the original docket ESNG is requesting to be withdrawn and the tariff sheets found in Appendix A of the instant filing be accepted in their place.

ESNG states that copies of the filing have been served upon its jurisdictional customers and interested State Commissions.

Any person desiring to protest said filing should file a protest with the Federal Energy Regulatory Commission, 888 First Street, N.E., Washington, D.C. 20426, in accordance with Rule 211 of the Commission's Rules of Practice and Procedure (18 CFR Section 385.211). All such protests must be filed in accordance with Section 154.210 of the Commission's Regulations. Protests will be considered by the Commission in determining the appropriate action to be taken, but will not serve to make protestants parties to the proceeding. Copies of this filing are on file with the Commission and are available for public inspection.

Linwood A. Watson, Jr.,

Acting Secretary.

[FR Doc. 97–540 Filed 1–9–97; 8:45 am]

BILLING CODE 6717–01–M

[Docket Nos. TQ97–2–23–002 and TM97–6–23–001]

Eastern Shore Natural Gas Company; Notice of Proposed Changes in FERC Gas Tariff

January 6, 1997.

Take notice that on December 31, 1996, Eastern Shore Natural Gas Company (ESNG) tendered for filing certain revised tariff sheets in the above captioned dockets as part of its FERC Gas Tariff, First Revised Volume No. 1, with proposed effective dates of November 1, 1996 and December 1, 1996, respectively.

On November 26, 1996, ESNG filed with the Commission revised rates to reflect an out-of cycle purchased gas adjustment (PGA), proposed to be effective December 1, 1996. Subsequently, on December 6, 1996, ESNG filed tariff sheets to track rate changes attributable to storage service purchased from Transcontinental Gas Pipe Line Corporation (Transco) and to correct a clerical error in its previously accepted tracker filing. It has since come to ESNG's attention, per FERC Order dated December 20, 1996, that ESNG's original filings contained incorrectly paginated tariff sheets. The instant filing is being made to correct the pagination errors made in the original filings.

ESNG states that copies of the filing have been served upon its jurisdictional customers and interested State Commissions.

Any person desiring to protest said filing should file a protest with the Federal Energy Regulatory Commission, 888 First Street, N.E., Washington, D.C. 20426, in accordance with Rule 211 of the Commission's Rules of Practice and Procedure (18 CFR Section 385.211). All such protests must be filed in accordance with Section 154.210 of the Commission's Regulations. Protests will be considered by the Commission in determining the appropriate action to be taken, but will not serve to make protestants parties to the proceeding. Copies of this filing are on file with the Commission and are available for public inspection in the Public Reference Room.

Linwood A. Watson, Jr.,

Acting Secretary.

[FR Doc. 97–541 Filed 1–9–97; 8:45 am]

BILLING CODE 6717–01–M

[Docket No. RP97–55–001]

Great Lakes Gas Transmission Limited Partnership; Notice of Compliance Filing

January 6, 1997.

Take notice that on December 31, 1996, Great Lakes Gas Transmission Limited Partnership (Great Lakes) tendered for consideration the following pro forma tariff sheets:

Second Revised Volume No. 1

Pro Forma Sheet No. 20
Pro Forma Sheet No. 23
Pro Forma Sheet No. 50B
Pro Forma Sheet No. 53
Pro Forma Sheet No. 55
Pro Forma Sheet No. 60

Original Volume No. 2

Pro Forma Sheet No. 68–B
Pro Forma Sheet No. 68–G
Pro Forma Sheet No. 101
Pro Forma Sheet No. 106
Pro Forma Sheet No. 152
Pro Forma Sheet No. 153
Pro Forma Sheet No. 161
Pro Forma Sheet No. 170
Pro Forma Sheet No. 172
Pro Forma Sheet No. 225
Pro Forma Sheet No. 233
Pro Forma Sheet No. 247
Pro Forma Sheet No. 255
Pro Forma Sheet No. 270
Pro Forma Sheet No. 272
Pro Forma Sheet No. 281
Pro Forma Sheet No. 297
Pro Forma Sheet No. 306
Pro Forma Sheet No. 617
Pro Forma Sheet No. 618
Pro Forma Sheet No. 627

Great Lakes states that the above mentioned tariff sheets are being filed in compliance with the Federal Energy Regulatory Commission's Order of December 20, 1996 in Docket No. RP97–55–000. 77 FERC ¶ 61, 292 (1996).

Any person desiring to protest said filing should file a or protest with the Federal Energy Regulatory Commission, 888 First Street, N.E., Washington, D.C. 20426, in accordance with Section 385.211 of the Commission's Rules and Regulations. All such protests must be filed as provided in section 154.210 of the Commission's Regulations. Protests will be considered by the Commission in determining the appropriate action to be taken, but will not serve to make protestants parties to the proceeding. Copies of this filing are on file with the Commission and are available for public inspection in the Commission's Public Reference Room.

Linwood A. Watson, Jr.,

Acting Secretary.

[FR Doc. 97–553 Filed 1–9–97; 8:45 am]

BILLING CODE 6717–01–M

[Docket No. RP96–290–001]

Michigan Gas Storage Company; Notice of Proposed Changes in FERC Gas Tariff and of Motion to Make Suspended Rates Effective

January 6, 1997.

Take notice that on December 31, 1996, Michigan Gas Storage Company (MGS) tendered for filing as part of its FERC Gas Tariff, First Revised Volume No. 1, the following revised tariff sheets in compliance with the Commission's July 31, 1996 Order:

Fourth Revised Sheet No. 4
Fifth Revised Sheet No. 5
Second Revised Sheet No. 34

The Order required that MGS make certain changes to its filed tariff sheets, including eliminating costs associated with facilities, if any, not in service by December 31, 1996. MGS also tendered on December 31, 1996 its motion to make effective the rates originally filed in this docket (as modified in compliance with the Order) on January 1, 1997—the first day after the period for which the rates were suspended.

MGS states that copies of the filing were served upon those on the service list, MGS's jurisdictional customers and the Michigan Public Service Commission.

Any person desiring to protest said filing should file a protest with the Federal Energy Regulatory Commission, 888 First Street, N.E., Washington, DC 20426, in accordance with Section 385.211 of the Commission's Rules of Practice and Procedure. All such protests must be filed in accordance with Section 154.210 of the Commission's Regulations. Protests will be considered by the Commission in determining the appropriate action to be taken, but will not serve to make protestants parties to the proceeding. Copies of this filing are on file with the Commission and are available for public inspection.

Linwood A. Watson, Jr.,

Acting Secretary.

[FR Doc. 97–554 Filed 1–9–97; 8:45 am]

BILLING CODE 6717–01–M

[Docket No. RP97–223–000]

Midwestern Gas Transmission

January 7, 1997.

Take notice that on January 2, 1997, Midwestern Gas Transmission Company (Midwestern) tendered for filing as part of its FERC Gas Tariff, Second Revised Volume No. 1, the following tariff sheet, to become effective on February 1, 1997:

First Revised Sheet No. 106

Midwestern States that it is filing the proposed tariff change in order to eliminate the provision in its tariff that prevents requests for service from being submitted more than 90 days in advance of the date that the requested service is to commence.

Any person desiring to be heard or to protest this filing should file a motion to intervene or protest with the Federal Energy Regulatory Commission, 888 First Street, N.E., Washington, D.C. 20426, in accordance with Sections 385.214 and 385.211 of the Commission's Rules and Regulations. All such motions or protests must be filed in accordance with Section 154.210 of the Commission's Regulations. Protests will be considered by the Commission in determining the appropriate action to be taken, but will not serve to make protestants parties to the proceeding. Any person wishing to become a party must file a motion to intervene. Copies of this filing are on file with the Commission and are available for public inspection in the Public Reference Room.

Linwood A. Watson, Jr.,

Acting Secretary.

[FR Doc. 97–601 Filed 1–9–97; 8:45 am]

BILLING CODE 6717–01–M

[Docket No. ER96–2942–000]

National Power Marketing Company, L.L.C.; Notice of Issuance of Order

January 6, 1997.

National Power Marketing Company, L.L.C. (National Power) submitted for filing a rate schedule under which National Power will engage in wholesale electric power and energy transactions as a marketer. National Power also requested waiver of various Commission regulations. In particular, National Power requested that the Commission grant blanket approval under 18 CFR Part 34 of all future issuances of securities and assumptions of liability by National Power.

On December 31, 1996, pursuant to delegated authority, the Director, Division of Applications, Office of Electric Power Regulation, granted requests for blanket approval under Part 34, subject to the following:

Within thirty days of the date of the order, any person desiring to be heard or to protest the blanket approval of issuances of securities or assumptions of liability by National Power should file a motion to intervene or protest with the Federal Energy Regulatory Commission, 888 First Street, NE., Washington, DC 20426, in accordance with Rules 211

and 214 of the Commission's Rules of Practice and Procedure (18 CFR 385.211 and 385.214).

Absent a request for hearing within this period, National Power is authorized to issue securities and assume obligations or liabilities as a guarantor, endorser, surety, or otherwise in respect of any security of another person; provided that such issuance or assumption is for some lawful object within the corporate purposes of the applicant, and compatible with the public interest, and is reasonably necessary or appropriate for such purposes.

The Commission reserves the right to require a further showing that neither public nor private interests will be adversely affected by continued approval of National Power's issuances of securities or assumptions of liability.

Notice is hereby given that the deadline for filing motions to intervene or protests, as set forth above, is January 30, 1997.

Copies of the full text of the order are available from the Commission's Public Reference Branch, 888 First Street, NE., Washington, DC 20426.

Linwood A. Watson, Jr.,

Acting Secretary.

[FR Doc. 97–558 Filed 1–9–97; 8:45 am]

BILLING CODE 6717–01–M

[Docket No. ER97–654–000]

Newco US, L.P.; Notice of Issuance of Order

January 6, 1997.

Newco US, L.P. (Newco) submitted for filing a rate schedule under which Newco will engage in wholesale electric power and energy transactions as a marketer. Newco also requested waiver of various Commission regulations. In particular, Newco requested that the Commission grant blanket approval under 18 CFR Part 34 of all future issuances of securities and assumptions of liability by Newco.

On December 30, 1996, pursuant to delegated authority, the Director, Division of Applications, Office of Electric Power Regulation, granted requests for blanket approval under Part 34, subject to the following:

Within thirty days of the date of the order, any person desiring to be heard or to protest the blanket approval of issuances of securities or assumptions of liability by Newco should file a motion to intervene or protest with the Federal Energy Regulatory Commission, 888 First Street, N.E., Washington, D.C. 20426, in accordance with Rules 211 and 214 of the Commission's Rules of Practice and Procedure (18 CFR 385.211 and 385.214).

Absent a request for hearing within this period, Newco is authorized to issue securities and assume obligations or liabilities as a guarantor, endorser, surety, or otherwise in respect of any security of another person; provided that such issuance of assumption is for some lawful object within the corporate purposes of the applicant, and compatible with the public interest, and is reasonably necessary or appropriate for such purposes.

The Commission reserves the right to require a further showing that neither public nor private interests will be adversely affected by continued approval of Newco's issuances of securities or assumptions of liability.

Notice is hereby given that the deadline for filing motions to intervene or protests, as set forth above, is January 29, 1997.

Copies of the full text of the order are available from the Commission's Public Reference Branch, 888 First Street, N.E. Washington, D.C. 20426.

Linwood A. Watson, Jr.,

Acting Secretary.

[FR Doc. 97–557 Filed 1–9–97; 8:45 am]

BILLING CODE 6717–01–M

[Docket No. RP96–200–015]

NorAm Gas Transmission Company; Notice of Filing

January 7, 1997.

Take notice that on January 2, 1997, NorAm Gas Transmission Company (NGT) tendered for filing as part of its FERC Gas Tariff, Fourth Revised Volume No. 1, the following revised tariff sheets to be effective January 1, 1997:

Ninth Revised Sheet No. 7
Second Revised Sheet No. 7A
Second Revised Sheet No. 7B
Second Revised Sheet No. 7C
Second Revised Sheet No. 7D
Second Revised Sheet No. 7E

NGT states that these tariff sheets are filed herewith to reflect specific negotiated rate transactions for the month of January, 1997.

Any person desiring to protest said filing should file a motion to intervene or protest with the Federal Energy Regulatory Commission, 888 First Street, N.E., Washington, D.C. 20426, in accordance with Rule 211 of the Commission's Rules of Practice and Procedure (18 CFR 385.211). All such protests must be filed as provided in Section 154.210 of the Commission's Regulations. Protests will be considered by the Commission in determining the appropriate action to be taken, but will not serve to make protestants parties to the proceeding. Copies of this filing are on file with the Commission and are available for public inspection.

Linwood A. Watson, Jr.,

Acting Secretary.

[FR Doc. 97–600 Filed 1–9–97; 8:45 am]

BILLING CODE 6717–01–M

[Project No. 1988–007]

Pacific Gas & Electric Company; Notice of Proposed Restricted Service List for a Programmatic Agreement for Managing Properties Included in or Eligible for Inclusion in the National Register of Historic Places

January 6, 1997.

Rule 2010 of the Commission's Rules of Practice and Procedure provides that, to eliminate unnecessary expense or improve administrative efficiency, the Secretary may establish a restricted service list for a particular phase or issue in a proceeding (18 CFR 385.2010). The restricted service list should contain the names of persons on the service list who, in the judgment of the decisional authority establishing the list, are active participants with respect to the phase or issue in the proceeding for which the list is established.

The Commission is consulting with the California Office of Historic Preservation (hereinafter, ''SHPO'') and the Advisory Council on Historic Preservation (hereinafter, ''Council'') pursuant to the Council's regulations, 36 CFR Part 800, implementing § 106 of the National Historic Preservation Act, *as amended* (16 U.S.C. § 470f), to prepare a programmatic agreement for managing historic properties—i.e., those included in, or eligible for inclusion in, the National Register of Historic Places—that may be affected by a license issuing for Project No. 1988.

The programmatic agreement, when executed by the Commission, the SHPO, and the Council, would satisfy the Commission's § 106 responsibilities for all individual undertakings carried out in accordance with the license until the license expires or is terminated.

The Commission's responsibilities pursuant to the § 106 for Project No. 1988 would be fulfilled through one programmatic agreement which the Commission proposes to draft in consultation with certain parties listed below. The executed programmatic agreement would be incorporated into any order issuing license.

Thus, we propose, as an initial consideration, to restrict the service list to the SHPO and the Council, with

whom we propose to execute the Programmatic Agreement. Pacific Gas & Electric Company, moreover, as prospective licensee for Project No. 1988, and the Sierra National Forest, the entity managing the land on which the project is located, are invited to participate in consultations to develop the Programmatic Agreement and to sign it as concurring parties. Our proposed restricted service list for executing a Programmatic Agreement for Project No. 1988, follows:

Cherilyn Widell, Director, Office of Historic Preservation, Department of Parks and Recreation, P.O. Box 942896, Sacramento, CA 94296–0001, telephone (916) 653–6624.

Carol Glickman, Historic Preservation Specialist, Advisory Council on Historic Preservation, 12136 West Bayaud Avenue, Suite 330, Lakewood, CO 80228, telephone (303) 969–5110.

Terry A. Morford, Manager, Hydro Generation, Pacific Gas & Electric Company, 245 Market Street, Room 1103, Mail Code N11C, P.O. Box 770000, San Francisco, CA 94177, telephone (415) 973–5311.

Mr. James L. Boynton, Forest Supervisor, Sierra National Forest, 1600 Tollhouse Road, Clovis, CA 93611–0532, telephone (209) 297–0706.

Any person on the official service list for the above-captioned proceedings may request inclusion on the restricted service list, or may request that a restricted service list not be established, by filing a motion to that effect within 15 days of this notice date. An original and 8 copies of any such motion must be filed with Secretary, Federal Energy Regulatory Commission, 888 First Street, Northeast, Washington, DC 20426, and must be served on each person whose name appears on the official service list.

If no such motions are filed, the restricted service list will be effective at the end of the 15 day period. Otherwise, a further notice will be issued ruling on the motion.

Linwood A. Watson, Jr.,

Acting Secretary.

[FR Doc. 97–556 Filed 1–9–97; 8:45 am]

BILLING CODE 6717–01–M

[Docket No. RP97–221–000]

Sea Robin Pipeline Company Notice of Flowthrough Crediting Report

January 6, 1997.

Take notice that on December 31, 1996, Sea Robin Pipeline Company (Sea Robin) tendered for filing a report setting forth amounts due shippers through its Annual Flowthrough Crediting Mechanism.

Sea Robin states that this report is filed pursuant to Section 27 of the General Terms and Conditions of Sea Robin's FERC Gas Tariff which requires the crediting of certain amounts received as a result of resolving monthly imbalances between its gas and liquefiables shippers and under its operational balancing agreements, and imposing scheduling penalties during the 12 month period ending October 31, 1996.

Sea Robin states that copies of Sea Robin's filing will be served upon all of Sea Robin's shippers, interested commissions and interested parties.

Any person desiring to be heard or to protest said filing should file a petition to intervene or protest with the Federal Energy Regulatory Commission, 888 First Street, N.E., Washington, D.C. 20426, in accordance with Rules 214 and 211 of the Commission's Rules of Practice and Procedure (Section 385.214 and 385.211). All such petitions or protests should be filed on or before January 13, 1997. Protests will be considered by the Commission in determining the appropriate action to be taken but will not serve to make protestants parties to the proceeding. Any person wishing to become a party must file a petition to intervene. Copies of this filing are on file with the Commission and are available for public inspection.

Linwood A. Watson, Jr.,

Acting Secretary.

[FR Doc. 97–545 Filed 1–9–97; 8:45 am]

BILLING CODE 6717–01–M

[Docket No. RP97–216–000]

Southern Natural Gas Company; Notice of GSR Revised Tariff Sheets

January 6, 1997.

Take notice that on December 31, 1996, Southern Natural Gas Company (Southern) tendered for filing as part of its FERC Gas Tariff, Seventh Revised Volume No. 1, the following tariff sheets with the proposed effective date of January 1, 1997:

Tariff Sheets Applicable to Contesting Parties:

Twentieth Revised Sheet No. 14
Forty-Second Revised Sheet No. 15
Twentieth Revised Sheet No. 16
Forty-Second Revised Sheet No. 17
Twenty-Seventh Revised Sheet No. 29

Southern states that it submits the revised tariff sheets to its FERC Gas Tariff, Seventh Revised Volume No. 1, to reflect a change in its FT/FT–NN GSR Surcharge, resulting from a credit for interim firm transportation provided during December 1996 and an increase in GSR billing units effective January 1, 1997.

Southern states that copies of the filing were served upon all parties listed on the official service list compiled by the Secretary in these proceedings.

Any person desiring to be heard or to protest said filing should file a motion to intervene or protest with the Federal Energy Regulatory Commission, 888 First Street, N.E., Washington, D.C. 20426, in accordance with Sections 385.214 and 385.211 of the Commission's Rules of Practice and Procedure. All such motions or protests must be filed in accordance with Section 154.210 of the Commission's Regulations. Protests will be considered by the Commission in determining the appropriate action to be taken, but will not serve to make protestants parties to the proceeding. Any person wishing to become a party must file a motion to intervene. Copies of Southern's filing are on file with the Commission and are available for public inspection.

Linwood A. Watson, Jr.,

Acting Secretary.

[FR Doc. 97–550 Filed 1–9–97; 8:45 am]

BILLING CODE 6717–01–M

[Docket No. CP97–171–000]

Texas Eastern Transmission Corporation; Notice of Request Under Blanket Authorization

January 7, 1997.

Take notice that on December 27, 1996, Texas Eastern Transmission Corporation (Texas Eastern), 5400 Westheimer Court, Houston Texas, 77056–5310, filed in the above docket, a request pursuant to Sections 157.205 and 157.216(b) of the Commission's Regulations under the Natural Gas Act for authorization to abandon M&R Station No. 70531 located at approximate Mile Post 294.47 on Texas Eastern's Line 1 in Jackson County, Arkansas, all as more fully set forth in the request which is on file with the Commission and open to public inspection.

Texas Eastern states that this Meter Station has not been used since 1967 and that it anticipates no future use of this facility. Texas Eastern states that this Meter Station was authorized in Docket No. G–15076 pursuant to Federal Power Commission Order No. 240 issued August 27, 1958.

Texas Eastern states that because all abandonment activity will take place on Texas Eastern's permanent right-of-way

(ROW), Texas Eastern submits that the abandonment of M&R Station No. 70531 will not result in any significant environmental impact.

Any person or the Commission's staff may, within 45 days after issuance of the instant notice by the Commission, file pursuant to Rule 214 of the Commissions Rules of Practice and Procedure (18 CFR 385.214) a motion to intervene or notice of intervention and pursuant to Section 157.205 of the Regulations under the Natural Gas Act (18 CFR 157.205) a protest to the request. If no protest is filed within the time allowed therefor, the proposed activity is deemed to be authorized effective on the day after the time allowed for filing a protest. If a protest is filed and not withdrawn within 30 days after the time allowed for filing a protest, the instant request shall be treated as an application for authorization pursuant to Section 7 of the Natural Gas Act.

Linwood A. Watson, Jr.,

Acting Secretary.

[FR Doc. 97–599 Filed 1–9–97; 8:45 am]

BILLING CODE 6717–01–M

[Docket No. RP97–71–003]

Transcontinental Gas Pipe Line Corporation; Notice of Compliance Filing

January 6, 1997.

Take notice that on December 20, 1996, in compliance with the Commission's order issued on November 29, 1996 [1] Transcontinental Gas Pipe Line Corporation (Transco) tendered for filing illustrative rates and workpapers reflecting the change in its filed rates in Docket No. RP97–71–000 due to the Phase II Settlement in Docket No. RP95–197–000.

Transco states that the November 29 order directed Transco to file, within 30 days of the issuance of such order, illustrative rates and workpapers reflecting the effect of the Phase II Settlement in Docket No. RP95–197–000 on the rates proposed in the November 1 filing. Transco states that the filing is in compliance with the Commission's directive.

Transco states that it is serving copies of the instant filing on the parties to Docket No. RP97–71–000.

Any person desiring to protest said filing should file a protest said filing should file a protest with the Federal Energy Regulatory Commission, 888 First Street, N.E., Washington, D.C., 20426, in accordance with Section 385.211 of the Commission's Regulations. All such protests must be filed on or before January 13, 1997. Protests will be considered by the Commission in determining the appropriate action to be taken, but will not serve to make protestants parties to the proceeding. Copies of this filing are on file with the Commission and are available for public inspection in the Public Reference Room.

Linwood A. Watson, Jr.,

Acting Secretary.

[FR Doc. 97–552 Filed 1–9–97; 8:45 am]

BILLING CODE 6717–01–M

[1] 77 FERC ¶ 61,2325 (1996).

[Docket No. RP97–220–000]

Williams Natural Gas Company; Notice of Proposed Changes in FERC Gas Tariff

January 6, 1997.

Take notice that on December 31, 1996, Williams Natural Gas Company (WNG), tendered for filing to become part of its FERC Gas Tariff, Second Revised Volume No. 1, the following tariff sheets, with the proposed effective date of February 1, 1997:

Eighteenth Revised Sheet No. 6A
Third Revised Sheet Nos. 8C and 8D

WNG states that this filing is being made pursuant to Article 14 of the General Terms and Conditions of its FERC Gas Tariff, Second Revised Volume No. 1. WNG hereby submits its fourth quarter report of take-or-pay buyout, buydown and contract reformation costs and gas supply related transition costs, and the application or distribution of those costs and refunds.

WNG states that a copy of its filing was served on all participants listed on the service lists maintained by the Commission in the dockets referenced above and on all of WNG's jurisdictional customers and interested state commissions.

Any person desiring to be heard or to protest this filing should file a motion to intervene or a protest with the Federal Energy Regulatory Commission, 888 First Street, NE., Washington, DC 20426, in accordance with Sections 385.214 and 385.211 of the Commission's Rules and Regulations. All such motions or protests must be filed as provided in Section 154.210 of the Commission's Regulations. Protests will be considered by the Commission in determining the appropriate action to be taken, but will not serve to make protestants parties to the proceedings. Any person wishing to become a party must file a motion to intervene. Copies of this filing are on file with the Commission and are available for public inspection in the Public Reference Room.

Linwood A. Watson, Jr.,

Acting Secretary.

[FR Doc. 97–546 Filed 1–9–97; 8:45 am]

BILLING CODE 6717–01–M

[Docket No. TM97–2–49–000]

Williston Basin Interstate Pipeline Company; Notice of Fuel Reimbursement Charge Filing

January 6, 1997.

Take notice that on December 31, 1996, Williston Basin Interstate Pipeline Company (Williston Basin), tendered for filing as part of its FERC Gas Tariff, the following revised tariff sheets to become effective February 1, 1997:

Second Revised Volume No. 1

Twenty-first Revised Sheet No. 15
Ninth Revised Sheet No. 15A
Twenty-fourth Revised Sheet No. 16
Ninth Revised Sheet No. 16A
Twenty-first Revised Sheet No. 18
Ninth Revised Sheet No. 18A
Ninth Revised Sheet No. 19
Ninth Revised Sheet No. 20
Eighteenth Revised Sheet No. 21

Original Volume No. 2

Sixty-fifth Revised Sheet No. 11B

Williston Basin states that these tariff sheets reflect revisions to the fuel reimbursement charge and percentage components of the Company's relevant gathering, transportation and storage rates, pursuant to Williston Basin's Fuel Reimbursement Adjustment Provision, contained in Section 38 of the General Terms and conditions of Williston Basin's FERC Gas Tariff, Second Revised Volume No. 1.

Any person desiring to be heard or to protest said filing should file a motion to intervene or protest with the Federal Energy Regulatory Commission, 888 First Street, NE., Washington, DC 20426, in accordance with Sections 385.214 and 385.211 of the Commission's Rules and Regulations. All such motions or protests must be filed in accordance with Section 154.210 of the Commission's Regulations. Protests will be considered by the Commission in determining the appropriate action to be taken, but will not serve to make protestants parties to the proceeding. Any person wishing to become a party must file a motion to intervene. Copies of this filing are on file with the Commission and are available for public

inspection in the Public Reference Room.

Linwood A. Watson, Jr.,

Acting Secretary.

[FR Doc. 96–542 Filed 1–9–97; 8:45 am]

BILLING CODE 6717–01–M

[Docket No. RP97–215–000]

Williston Basin Interstate Pipeline Company; Notice of Proposed Changes In FERC Gas Tariff

January 6, 1997.

Take notice that on December 31, 1996, Williston Basin Interstate Pipeline Company (Williston Basin), tendered for filing as part of its FERC Gas Tariff, Second Revised Volume No. 1, the following original and revised tariff sheets to become effective February 1, 1997:

Second Revised Volume No. 1

First Revised Sheet No. 322A
Original Sheet No. 322B
First Revised Sheet No. 323
Original Sheet No. 323A
First Revised Sheet No. 324
Original Sheet No. 324A
First Revised Sheet No. 325
Original Sheet No. 325A
First Revised Sheet No. 326
Original Sheet No. 326A
First Revised Sheet No. 327
Original Sheet No. 327A
First Revised Sheet No. 328
Original Sheet No. 328A
Original Sheet No. 328B
First Revised Sheet No. 329
Original Sheet No. 329A
Original Sheet No. 329B
First Revised Sheet No. 330
First Revised Sheet No. 331
First Revised Sheet No. 333
First Revised Sheet No. 334
Original Sheet No. 334A
First Revised Sheet No. 335
Original Sheet No. 335A
Original Sheet No. 335B
Third Revised Sheet No. 336
Original Sheet No. 336A
First Revised Sheet No. 337
Original Sheet No. 337A
First Revised Sheet No. 338
Original Sheet No. 338A
First Revised Sheet No. 339
Original Sheet No. 339A
Original Sheet No. 339B
Third Revised Sheet No. 340
Original Sheet No. 340A
First Revised Sheet No. 341
Original Sheet No. 341A
Original Sheet No. 341B

Williston Basin states that these tariff sheets reflect the Company's proposal to incorporate the recovery of electric power purchased for use in the operation of its electric compressor stations into the current fuel reimbursement adjustment provision. By doing so, Williston Basin's electric power costs will be tracked in a manner very similar to the Company's current method for tracking gas fuel requirements as outlined in Section 38 of its FERC Gas Tariff, Second Revised Volume No. 1. Williston Basin further states that although such electric costs will be tracked independently of the gas costs, for billing purposes the gas and electric compressor rates or in-kind percentages will be added together in order to reflect only one applicable fuel rate or percentage rate for each rate schedule.

Any person desiring to be heard or to protest said filing should file a motion to intervene or protest with the Federal Energy Regulatory Commission, 888 First Street, N.E., Washington, D.C. 20426, in accordance with Sections 385.214 and 385.211 of the Commission's Rules and Regulations. All such motions or protests must be filed in accordance with Section 154.210 of the Commission's Regulations. Protests will be considered by the Commission in determining the appropriate action to be taken, but will not serve to make protestants parties to the proceeding. Any person wishing to become a party must file a motion to intervene. Copies of this filing are on file with the Commission and are available for public inspection in the Public Reference Room.

Linwood A. Watson, Jr.,

Acting Secretary.

[FR Doc. 97–551 Filed 1–9–97; 8:45 am]

BILLING CODE 6717–01–M

[Docket No. RP97–218–000]

Wyoming Interstate Company, Ltd.; Notice of Proposed Changes in FERC Gas Tariff

January 6, 1997.

Take notice that on December 31, 1996, Wyoming Interstate Company, Ltd. (WIC), tendered for filing to become part of its FERC Gas Tariff, First Revised Volume No. 1 and Second Revised Volume No. 2, the tariff sheets listed in Appendix A to the filing, to be effective December 31, 1996.

WIC states that the purpose of this compliance filing is to conform WIC's tariff to the requirements of Order No. 582.

WIC further states that copies of this filing have been served on WIC's jurisdictional customers and public bodies.

Any person desiring to be heard or to make any protest with reference to said application should file a motion to intervene or a protest with the Federal Energy Regulatory Commission, 888 First Street, NE., Washington, DC 20426, in accordance Sections 385.214 or 385.211 of the Commission's Rules of Practice and Procedure. All such motions or protests must be filed in accordance with Section 154.210 of the Commission's Regulations. Protests filed with the Commission will be considered by it in determining the appropriate action to be taken, but will not serve to make the protestants parties to the proceedings. Any person wishing to become a party must file a motion to intervene. Copies of the filing are on file with the Commission and are available for public inspection in the Public Reference Room.

Linwood A. Watson, Jr.,

Acting Secretary.

[FR Doc. 97–548 Filed 1–9–97; 8:45 am]

BILLING CODE 6717–01–M

[Docket No. TM97–1–119–000]

Young Gas Storage Company, Ltd.; Notice of Filing

January 6, 1997.

Take notice that on December 31, 1996, Young Gas Storage Company, Ltd. (Young) tendered for filing as part of its FERC Gas Tariff, Original Volume No. 1, the following tariff sheet, to become effective February 1, 1997:

Second Revised Sheet No. 4
Third Revised Sheet No. 47

Young states it is adjusting the rates for Rate Schedules FS–1 and IS–1 resulting from the currently effective Average Thermal Content of Gas in Storage (ATC) posted on Young's electronic bulletin board on December 27, 1996 pursuant to Section 1.2 of the General Terms and Conditions of this tariff. Further, Young states the combination of the revised ATC, the revised entitlements and the revised storage rates will not change the current customer storage reservation payments under the instant proposal.

Young states that copies of this filing have been served on Young's affected jurisdictional customers and public bodies.

Any person desiring to be heard or to protest said filing should file a motion to intervene or a protest with the Federal Energy Regulatory Commission, 888 First Street N.E., Washington D.C. 20426, in accordance with Sections 385.211 and 385.214 of the Commission's Rules of Practice and Procedure (18 CFR Section 385.214 and 385.211). All such petitions or protests must be filed in accordance with Section 154.210 of the Commission's Regulations. Protests will be considered by the Commission in determining the

appropriate action to be taken, but will not serve to make protestants parties to the proceedings. Any person wishing to become a party must also file a motion to intervene. Copies of this filing are on file with the Commission and are available for public inspection in the Public Reference Room.

Linwood A. Watson, Jr.,

Acting Secretary.

[FR Doc. 97–543 Filed 1–9–97; 8:45 am]

BILLING CODE 6717–01–M

ENVIRONMENTAL PROTECTION AGENCY

[ER–FRL–5476–5]

Environmental Impact Statements and Regulations; Availability of EPA Comments

Availability of EPA comments prepared December 23, 1996 Through December 27, 1996 pursuant to the Environmental Review Process (ERP), under Section 309 of the Clean Air Act and Section 102(2)(c) of the National Environmental Policy Act as amended. Requests for copies of EPA comments can be directed to the Office of Federal Activities at (202) 564–7167.

An explanation of the ratings assigned to draft environmental impact statements (EISs) was published in FR dated April 05, 1996 (65 FR 15251).

Draft EISs

ERP No. D–FHW–J40140–MT Rating EC2, US 93 Highway Transportation Improvements, between Hamilton (Milepost) 49.0 to Lolo (Milepost 83.2), Funding and COE Section 404 Permit, Ravalli and Missoula Counties, MT.

Summary: EPA expressed environmental concerns regarding indirect impacts, and the preservation of environmentally sensitive areas, which should be mitigated in order to fully protect the environment.

ERP No. D–USN–K11074–CA Rating EC2, Las Pulgas and San Mateo Basin, Cease and Desist Order, Sewage Effluent Compliance Project, NPDES Permit, Marine Corps Base, Camp Pendleton, San Diego County, CA.

Summary: EPA expressed environmental concerns regarding the lack of a complete alternatives analysis and a full description of the purpose and need.

Final EISs

ERP No. F–FEM–E36160–GA, Albany Flood Recovery Activities, Replacement of Damaged Public Schools, Housing and Businesses, Albany and Dougherty Counties, GA.

Summary: EPA continued to have a lack of objection to the proposed actions.

ERP No. F–FHW–C40126–NJ, NJ–21 Freeway Extension Project, Construction and Modification, Monroe Street in Passaic to Route 46/Lexington Avenue Intersection, Funding, and COE Section 10 and 404 Permits, Cities of Passaic and Clifton, Passaic County, NJ.

Summary: EPA continued to have environmental concerns regarding the measures to mitigate impacts to aquatic resources. Accordingly, the mitigation plan should be included as part of the Record of Decision.

ERP No. F–NOA–C91003–00, Queen Conch Resources Fishery Management Plan, Implementation, Atlantic Ocean and Caribbean Portions of the Exclusive Economic Zone (EEZ) adjacent to the State Waters of Puerto Rico and the US Virgin Islands.

Summary: EPA had no objections to the implementation of the proposed project.

ERP No. F–NOA–E64016–FL, Florida Keys National Marine Sanctuary Comprehensive Management Plan, Implementation and Special-Use-Permit, Monroe County, FL.

Summary: EPA had no objection to the preferred action.

ERP No. F–SFW–K39038–NV, Lahontan Valley Wetlands Water Rights Acquisition Program, Implementation, Churchill County, NV.

Summary: EPA continued to express environmental concerns regarding potential water quality impacts due to agriculture drainage. EPA requested that the project include a monitoring program and active management to mitigate any agriculture drainage.

ERP No. FS–USA–K11016–CA, Fort Ord Disposal and Reuse Installation, Implementation, Additional Information, Establishment of Presido of Monterey (POM) Annex, Cities of Marina and Seaside, Monterey County, CA.

Summary: EPA had no objection with the proposed project.

ERP No. FS–VAD–G99005–OK, Oklahoma City Area National Cemetery Construction and Operation, Updated Information on a New Potential Site, Fort Sill, Comanche County, OK.

Summary: EPA had no objection to the selection of the Preferred Alternative.

Dated: January 6, 1997.

William D. Dickerson,

Director, NEPA Compliance Division, Office of Federal Activities.

[FR Doc. 97–650 Filed 1–9–97; 8:45 am]

BILLING CODE 6560–50–U

[ER–FRL–5476–4]

Environmental Impact Statements; Notice of Availability

Responsible Agency: Office of Federal Activities, General Information (202) 564–7167 OR (202) 564–7153. Weekly receipt of Environmental Impact Statements Filed December 30, 1996 Through January 03, 1997 Pursuant to 40 CFR 1506.9.

EIS No. 960603, Final EIS, FRC, OR, Leaburg-Walterville Hydroelectric (FERC. No. 2496) Project, Issuance of New License (Relicense), Funding and Land Trust Acquisition, McKenzie River, Lane County, OR, Due: February 10, 1997, Contact: Edward R. Meyer (202) 208–7998.

EIS No. 960604, Draft Supplement, NOA, Snapper Grouper Fishery, Amendment 8 to the Fishery Mange Plan, Regulatory Impact Review, South Atlantic Region, Due: February 24, 1997, Contact: Paula Evans (301) 713–2341.

EIS No. 970000, Final EIS, FRC, ME, Eel Weir Hydroelectric Project (FERC. No. 2984) Implementation, Water Level Management Plan, Sebago Lake, Cumberland County, ME, Due: February 10, 1997, Contact: Thomas J. LoVullo (202) 219–1168.

EIS No. 970001, Final EIS, AFS, MT, Elk Creek Land Exchange and Granting an Easement to Plum Creek, Implementation, Flathead National Forest, Swan Lake Ranger District, MT, Due: February 10, 1997, Contact: Ken Meckel (406) 892–4372.

EIS No. 970002, Final EIS, NPS, AK, Denali National Park and Reserve, ''Frontcountry'' Entrance Area and Road Corridor, Development Concept Plan, AK, Due: February 10, 1997, Contact: Mike Tranel (907) 683–9552.

EIS No. 970003, Draft EIS, TVA, TN, Columbia Dam Component of the Duck River Project, Implementation, Use of Lands Acquired, Possible COE Section 404 Permit, Maury County, TN, Due: March 07, 1997, Contact: Daniel H. Ferry (423) 632–8876.

Amended Notices

EIS No. 960560, Final EIS, GSA, NY, US Brooklyn Court Project, Demolition of the Emanuel Celler Federal Building, Construction of a New Courthouse and Renovation/Adaptive Reuse of the General Post Office at Cadman Plaza East, Kings County, NY, Due: January 27, 1997, Contact: Peter A. Sneed (212) 264–3581. Published FR 12–13–96—Review Period extended.

Dated: January 7, 1997.

William D. Dickerson,

Director, NEPA Compliance Division Office of Federal Activities.

[FR Doc. 97–651 Filed 1–9–97; 8:45 am]

BILLING CODE 6560–50–U

[FRL–5674–9]

Science Advisory Board; Notification of Public Advisory Committee Meetings

Pursuant to the Federal Advisory Committee Act, Public Law 92–463, notice is hereby given that several committees of the Science Advisory Board (SAB) will meet on the dates and times described below. All times noted are Eastern Daylight Time. All meetings are open to the public. Due to limited space, seating at meetings will be on a first-come basis. For further information concerning specific meetings, please contact the individuals listed below. Documents that are the subject of SAB reviews are normally available from the originating EPA office and are *not* available from the SAB Office.

1. Ecological Risk Subcommittee of the Integrated Risk Project (IRP)

The Ecological Risk Subcommittee of the Integrated Risk Project (IRP) of the Science Advisory Board (SAB) will hold a teleconference meeting on January 27 from 2:00 pm—4:30 pm to discuss the Subcommittee's draft methodology for assessing relative ecological risks from a variety of biological, chemical and physical stressors.

Background—In a letter dated October 25, 1995, Deputy Administrator Fred Hansen requested the SAB to update the assessment of environmental risks, priorities, and risk reduction opportunities contained in the 1990 SAB report, Reducing Risk: Setting Priorities and Strategies for Environmental Protection (EPA–SAB–EC–90–021). In response to that the charge, the ERS has held a series of meetings over the past nine months and is now finalizing its recommendations and relative risk ranking methodology.

For Further Information—Single copies of Reducing Risk, the report of the previous relative risk ranking effort of the SAB, can be obtained by contacting the SAB's Committee Evaluation and Support Staff (1400), 401 M Street, SW, Washington, DC 20460, telephone (202) 260–8414, or fax (202) 260–1889. Anyone wishing to make an oral presentation on the teleconference must contact Ms. Stephanie Sanzone, Designated Federal Official for the Subcommittee, no later than 4:00 pm (Eastern Daylight Time) January 22, 1997, at telephone (202) 260–6557, fax (202) 260–7118, or via the Internet at: Sanzone.Stephanie@ EPAMAIL.EPA.GOV. The request should identify the name of the individual who will make the presentation and an outline of the issues to be addressed.

2. Environmental Economics Advisory Committee (EEAC) and the Economic Analysis Subcommittee (EAS) of the Integrated Risk Project (IRP)

The Environmental Economic Advisory Committee, sitting as the Economic Analysis Subcommittee of the Integrated Risk Project Committee (IRP) of the Science Advisory Board (SAB), will meet on February 7, 1997, from 9:00 a.m. to no later than 5:00 p.m. (Eastern Daylight Time) in Room 2103 of Waterside Mall, US EPA, 401 M Street SW, Washington, DC 20460. This meeting is open to the public, however, due to limited space, seating will be on a first-come basis. The purpose of the meeting is to continue Committee efforts in support of the larger IRP effort of the SAB.

Background—In a letter dated October 25, 1995, Deputy Administrator Fred Hansen requested the SAB to update the assessment of environmental risks, priorities, and risk reduction opportunities contained in the 1990 SAB report, Reducing Risk: Setting Priorities and Strategies for Environmental Protection (EPA–SAB–EC–90–021). In subsequent discussions with the Deputy Administrator, the SAB has also agreed to provide insights on economic analysis of risk reduction options. The current charge to the Economic Analysis Subcommittee is to explore and report on ways to assess the economic values associated with regulatory options that the agency often proposes in response to its statutory mandates for environmental protection. This will be the second meeting of the Subcommittee on this issue.

For Further Information—Single copies of the information provided to the Subcommittee can be obtained by contacting Ms. Diana Pozun, Staff Secretary, Committee Operations Staff, Science Advisory Board (1400), US EPA, 401 M Street SW., Washington DC 20460, telephone (202) 260–6552, fax (202) 260–7118, or Internet at: Pozun.Diana@ EPAMAIL.EPA.GOV. Single copies of Reducing Risk, the report of the previous relative risk ranking effort of the SAB, can be obtained by contacting the SAB's Committee Evaluation and Support Staff (1400), 401 M Street, SW, Washington, DC 20460, telephone (202) 260–8414, or fax (202) 260–1889. Anyone wishing to make an oral presentation at the meeting must contact Mr. Thomas Miller, Designated Federal Official for the Economic Analysis Subcommittee-IRP, *in writing* no later than 4:00 pm (Eastern Daylight Time) February 3, 1997, at the above address, via fax (202) 260–7118, or via the Internet at: Miller.Tom@EPAMAIL.EPA.GOV. The request should identify the name of the individual who will make the presentation and an outline of the issues to be addressed. At least 35 copies of any written comments to the Committee are to be given to Mr. Miller no later than the time of the presentation for distribution to the Committee and the interested public. To discuss technical aspects of the meeting, please contact Mr. Miller by telephone at (202) 260–5886.

3. Valuation Subcommittee (VS) of the Integrated Risk Project (IRP)

The Valuation Subcommittee (Committee) of the Integrated Risk Project Committee (IRP) of the Science Advisory Board (SAB) will meet from February 19 through 21, 1997, from 9:00 am on February 19 to no later than 5:00 pm (Eastern Daylight Time) on February 21 at the Holiday Inn-Baltimore Inner Harbor, located at 30–1 W. Lombard Street, Baltimore, MD, 21201. This meeting is open to the public, however, due to limited space, seating will be on a first-come basis. The purpose of the meeting is to continue Committee efforts in support of the larger IRP effort of the SAB.

Background—In a letter dated October 25, 1995, Deputy Administrator Fred Hansen requested the SAB to update the assessment of environmental risks, priorities, and risk reduction opportunities contained in the 1990 SAB report, Reducing Risk: Setting Priorities and Strategies for Environmental Protection (EPA–SAB–EC–90–021). In subsequent discussions with the Deputy Administrator, the SAB has also agreed to provide insights on economic analysis of risk reduction options and ecosystem valuation. In summary, the current charge to the Valuation Subcommittee is to propose a new framework for assessing the value of ecosystems to humans, including ecological services and environmentally mediated health and quality of life values.

For Further Information—Single copies of the information provided to the Committee can be obtained by contacting Ms. Diana Pozun, Staff Secretary, Committee Operations Staff, Science Advisory Board (1400), US EPA, 401 M Street SW., Washington DC 20460, telephone (202) 260–6552, fax

(202) 260–7118, or Internet at: Pozun.Diana@ EPAMAIL.EPA.GOV. Single copies of Reducing Risk, the report of the previous relative risk ranking effort of the SAB, can be obtained by contacting the SAB's Committee Evaluation and Support Staff (1400), 401 M Street, SW, Washington, DC 20460, telephone (202) 260–8414, or fax (202) 260–1889. Anyone wishing to make an oral presentation at the meeting must contact Mr. Thomas Miller, Designated Federal Official for the Valuation Subcommittee IRP, *in writing* no later than 4:00 pm (Eastern Daylight Time) February 12, 1997, at the above address, via fax (202) 260–7118, or via the Internet at: Miller.Tom@EPAMAIL.EPA.GOV. The request should identify the name of the individual who will make the presentation and an outline of the issues to be addressed. At least 35 copies of any written comments to the Committee are to be given to Mr. Miller no later than the time of the presentation for distribution to the Committee and the interested public. To discuss technical aspects of the meeting, please contact Mr. Miller by telephone at (202) 260–5886.

Providing Oral or Written Comments at SAB Meetings

The Science Advisory Board expects that public statements presented at its meetings will not be repetitive of previously submitted oral or written statements. In general, each individual or group making an oral presentation will be limited to a total time of ten minutes. For conference call meetings, opportunities for oral comment will be limited to no more than five minutes per speaker and no more than fifteen minutes total. Written comments (at least 35 copies) received in the SAB Staff Office sufficiently prior to a meeting date, may be mailed to the relevant SAB committee or subcommittee prior to its meeting; comments received too close to the meeting date will normally be provided to the committee at its meeting. Written comments may be provided to the relevant committee or subcommittee up until the time of the meeting.

Dated: January 2, 1997.

Donald G. Barnes,

Staff Director, Science Advisory Board.

[FR Doc. 97–646 Filed 1–9–97; 8:45 am]

BILLING CODE 6560–50–P

[FRL–5674–6]

CWA 303(d): Proposed Withdrawal of Phase I Total Maximum Daily Loads (TMDLs) for Copper in the New Jersey Waters of New York-New Jersey Harbor

AGENCY: Environmental Protection Agency, Region II (EPA).

ACTION: Notice.

SUMMARY: EPA has determined that the New Jersey waters of the New York-New Jersey Harbor are not water quality-limited for copper, and therefore, Phase I copper TMDLs are not required for these water segments. EPA is hereby issuing public notice of its intent to withdraw the Phase I TMDL for copper established by EPA on January 24, 1996.

DATES: Comments on the proposed action must be submitted to EPA on or before February 10, 1997.

ADDRESSES: Copies of the relevant supporting documents may be obtained by writing to Ms. Rosella T. O'Connor, Fate & Effects Team, U.S. Environmental Protection Agency Region II, 290 Broadway, 24th Floor, New York, New York 10006–1866 or calling (212) 637–3823.

The administrative record containing background technical information is on file and may be inspected at the U.S. EPA, Region II office between the hours of 9:00 a.m. and 4:30 p.m., Monday through Friday, except holidays. Arrangements to examine the administrative record may be made by contacting Ms. Rosella T. O'Connor.

FOR FURTHER INFORMATION CONTACT: Ms. Rosella T. O'Connor, telephone (212) 637–3823.

SUPPLEMENTARY INFORMATION:

I. Background
II. Proposed Action

I. Background

A TMDL, or total maximum daily load, is the maximum amount of the pollutant that a waterbody can assimilate and still meet ambient water quality standards. TMDLs are established for water quality-limited segments, which are defined as ''any segment where it is known that water quality does not meet applicable water quality standards, and/or is not expected to meet applicable water quality standards, even after the application of technology-based effluent limitations * * *'' (40 CFR 130.2(i)).

On January 24, 1996, EPA established certain phased TMDLs, including waste load allocations (WLAs) and load allocations (LAs) for copper and mercury. (61 FR 1930). Phased TMDLs were developed for copper and mercury because of the limited ambient data and uncertainty in the model calibration for the New Jersey Harbor waters. The Phase I TMDLs established in January 1996 required additional data collection in the New Jersey Harbor waters before the establishment, as necessary, of revised Phase II TMDLs. Phase II TMDLs were to be established only if the additional data and/or modeling indicated that it was necessary to reduce point and/or nonpoint sources of certain metals below Phase I levels. The New Jersey Harbor waters are Newark Bay, Hackensack River below the Oradell Dam, Passaic River below the Dundee Dam, Raritan River below the Fieldville Dam and Raritan Bay.

The New Jersey Harbor Dischargers Group (NJHDG), in cooperation with the State of New Jersey and EPA, agreed to undertake the required additional monitoring and modeling. The first phase of the monitoring was designed to enhance the existing ambient data base and to confirm whether copper, lead, nickel and mercury exceed or potentially exceed applicable water quality standards in the New Jersey Harbor waters. Based on the results of this data collection effort, it was determined that certain metals and/or New Jersey Harbor waters would require additional monitoring and modeling to develop Phase II TMDLs. These data are contained in a report entitled, ''Summary of the Phase I Metals Sampling and Analysis Program for the New Jersey Component of the New York/New Jersey Harbor Estuary Program'' (March 5 and 26, 1996). The monitoring program included one station in each of the Hackensack, Passaic, and Raritan Rivers, and in Raritan and Newark Bays. Each of these stations was sampled twice per month for six months (from June 1995 through December 1995). The twelve sampling events included three wet-weather and two tidal cycle events. Overall, ninety water samples and five sediment samples were collected in twelve sampling events over a six month study period. These data were used to project water quality exceedances of copper, mercury, nickel and lead in the New Jersey waters of the Harbor.

Based on the ambient water quality data contained in the above-referenced report, EPA has determined the following:

- The New Jersey Harbor waters are not water quality-limited for copper, neither Phase I nor Phase II copper TMDLs are required. EPA is, therefore, proposing to withdraw the Phase I copper TMDLs promulgated on January 24, 1996;

• The New Jersey Harbor waters are not water quality-limited for lead, no Phase II lead TMDLs are required;

• The Passaic and Hackensack Rivers are water quality-limited for nickel, additional monitoring and/or modeling is required to develop Phase II nickel TMDLs for these waterbodies, as necessary; and

• Since all Harbor waters, including all New Jersey Harbor waters, continue to be water quality-limited for mercury, the Phase I mercury TMDLs established on January 24, 1996 remain in effect.

II. Proposed Action

The action proposed, the withdrawal of the Phase I copper TMDLs, is appropriate given the specific circumstances, monitoring data, and management approach agreed upon by the States of New Jersey and New York and EPA, for the waters of the New York-New Jersey Harbor. The Phase I TMDLs which were established included Waste Load Allocations which reflect existing effluent quality. Phased TMDLs were established while the conflict between the limited ambient data then available (which did not indicate an exceedance of the applicable water quality standard for copper) and the uncertainty in model calibration (which indicated a potential to exceed the copper standard) could be addressed through additional monitoring and/or modeling. The ambient water quality data contained in the NJHDG's above-referenced report is now sufficient to support that the New Jersey Harbor waters are not water quality-limited for copper.

EPA is soliciting public comments on the proposed withdrawal of the copper TMDLs for the New Jersey Harbor waters.

Dated: December 23, 1996.

Signed:

William J. Muszynski,

Acting Regional Administrator.

[FR Doc. 97–642 Filed 1–9–97; 8:45 am]

BILLING CODE 6560–50–P

FEDERAL DEPOSIT INSURANCE CORPORATION

Proposed Agency Information Collection Activities; Comment

AGENCY: Federal Deposit Insurance Corporation (FDIC).

ACTION: Notice and request for comment.

BACKGROUND: In accordance with the requirements of the Paperwork Reduction Act of 1995 (44 U.S.C. chapter 35), the FDIC may not conduct or sponsor, and the respondent is not required to respond to, an information collection that has been extended, revised, or implemented on or after October 1, 1995, unless it displays a currently valid Office of Management and Budget (OMB) control number. A proposed revision of the following currently approved collection of information is hereby published for comment. At the end of the comment period, the comments and recommendations received will be analyzed to determine the extent to which the collection should be modified prior to submission to OMB for review and approval. Comments are invited on: (a) Whether the collection of information is necessary for the proper performance of the FDIC's functions, including whether the information has practical utility; (b) the accuracy of the estimate of the burden of the information collection, including the validity of the methodology and assumptions used; (c) ways to enhance the quality, utility, and clarity of the information to be collected; and (d) ways to minimize the burden of information collection on respondents, including through the use of automated collection techniques or other forms of information technology.

DATES: Comments must be submitted on or before March 11, 1997.

ADDRESSES: Interested parties are invited to submit written comments to Steven F. Hanft, FDIC Clearance Officer, (202) 898–3907, Office of the Executive Secretary, Federal Deposit Insurance Corporation, 550 17th Street N.W., Washington, D.C. 20429. All comments should refer to the OMB control number 3064–0122. Comments may be hand-delivered to Room F–400, 1776 F Street, N.W., Washington, D.C. 20429, on business days between 8:30 a.m. and 5:00 p.m. [FAX number (202) 898–3838; Internet address: comments@fdic.gov].

A copy of the comments may also be submitted to the OMB desk officer for the agencies: Alexander Hunt, Project 3064–0122, Office of Information and Regulatory Affairs, Office of Management and Budget, New Executive Office Building, Room 3208, Washington, D.C. 20503.

FOR FURTHER INFORMATION CONTACT: Steven F. Hanft, at the address identified above.

SUPPLEMENTARY INFORMATION:

Proposal To Revise the Following Currently Approved Collection of Information

Title: Forms Relating to FDIC Outside Counsel Services Contracting.

Form Number: FDIC 1600/05, FDIC 5200/01.

OMB Number: 3064–0122.

Frequency of Response: On occasion.

Affected Public: Law firms wishing to do business with the FDIC and those under contract with the FDIC.

Estimated Number of Respondents: FDIC Form 1600/05—2,500; FDIC Form 5200/01—500.

Estimated Time per Response: FDIC Form 1600/05—.5 hours; FDIC Form 5200/01—1.25 hours.

Estimated Annual Burden: The OMB previously approved an information collection for FDIC outside counsel budgeting and invoicing with an annual burden of 3,804 hours under OMB No. 3064–0122 (November 25, 1996). The estimated additional burden imposed by FDIC Form 1600/05 is 1,250 burden hours and by FDIC Form 5200/01 is 625 hours, or a total additional burden of 1,875 hours. The annual burden, including both the already approved budgeting and invoicing collection of information and the additional request would be a total of 5,679 burden hours.

General Description of Collection: Section 19 of the Resolution Trust Corporation Completion Act required the FDIC to prescribe a regulation to ensure that persons providing services to be FDIC meet minimum standards of competence, experience, integrity and fitness, and to govern conflicts of interest. Pursuant to that mandate, the FDIC established a ''Contractor Conflicts of Interest'' regulation, 12 CFR Part 366, that became effective April 10, 1996. The FDIC's Contractor Conflicts of Interest regulation requires FDIC contractors, including law firms covered by this collection of information, to submit representations and certifications about themselves and their employees, agents and subcontractors who will perform services under an FDIC contract. Law firms desiring to provide services for the FDIC will use Form 5200/01 to make the representations and certifications about themselves required by 12 CFR Part 366. Individual employees, agents and subcontractors will use Form 1600/05 to make representations and certifications about themselves, and to authorize the release of information about themselves so that the FDIC can verify the representations and certifications.

Request for Comment

Comments submitted in response to this Notice will be summarized or included in the FDIC's requests to OMB for renewal of this collection. All comments will become a matter of public record. Written comments should address the accuracy of the burden

estimates and ways to minimize burden including the use of automated collection techniques or the use of other forms of information technology as well as other relevant aspects of the information collection request.

Dated at Washington, DC, this 6th day of January 1997.

Federal Deposit Insurance Corporation.

Jerry L. Langley,

Executive Secretary.

[FR Doc. 97–563 Filed 1–9–97; 8:45 am]

BILLING CODE 6714–01–M

Alternative Dispute Resolution

AGENCY: Federal Deposit Insurance Corporation (FDIC).

ACTION: Notice of adoption of policy statement.

SUMMARY: The FDIC has adopted a Statement of Policy to further its commitment to the use of Alternative Dispute Resolution for resolving appropriate disputes in a timely and cost efficient manner and to comply with the spirit of the Administrative Dispute Resolution Act of 1996.

EFFECTIVE DATE: December 11, 1996.

FOR FURTHER INFORMATION CONTACT: Martha W. McClellan, Counsel (202) 736–0512, Legal Division, Federal Deposit Insurance Corporation, 550 17th Street, NW., Washington, DC 20429.

SUPPLEMENTARY INFORMATION: The Board of Directors of the FDIC has modified its Statement of Policy on Alternative Dispute Resolution to reflect technical adjustments necessary in light of the reenactment of the Administrative Dispute Resolution Act (Pub. L. 104–320), and to reflect recent FDIC administrative and organizational changes. The text of the revised Policy Statement follows:

Statement of Policy on Alternative Dispute Resolution

The Federal Deposit Insurance Corporation (FDIC) has been and continues to be committed to the use of Alternative Dispute Resolution (ADR) for resolving appropriate disputes in a more timely, less costly manner than litigation or administrative adjudication. The FDIC hereby adopts this policy to reiterate its commitment to ADR, to express its full support for ADR and to set forth a framework for the continuing and expanding use of ADR. The Corporation views ADR not as an end in itself, but rather, as an additional tool to accomplish its business efficiently, economically and productively. To that end, the FDIC believes that its ADR policy should be dynamic and continually developing.

The FDIC fully supports the cost-effective use of ADR, including negotiation, mediation, early neutral evaluation, neutral expert fact-finding, mini-trials and other hybrid forms of ADR in appropriate instances. The purpose of this policy is to use ADR in appropriate instances to resolve disputes at the earliest stage possible, by the fastest and least expensive method possible and at the lowest possible organizational level consistent with applicable delegation of authority.

The Senior Deputy Director (Division of Resolutions and Receiverships) serves as the Dispute Resolution Specialist for the Corporation. In addition, an ADR Steering Committee, composed of the Dispute Resolution Specialist (or his/her designee) and representatives from each Division and Office, was established by the Board of Directors in 1994 to coordinate and encourage appropriate and cost-effective conflict management practices in all aspects of FDIC operations and programs. The Dispute Resolution Specialist, working with the ADR Steering Committee, shall report to the Board of Directors on an annual basis regarding the Corporation's ADR efforts, implementation of this policy, and any revisions or actions necessary.

It is the responsibility of all FDIC employees to implement this policy and to practice and promote cost-effective dispute resolution in FDIC programs and other areas of Corporation operation. All management and employees of the FDIC are hereby directed to take the necessary steps to implement this policy and to cooperate to the fullest extend with the ADR Steering Committee and the Dispute Resolution Specialist (and his/her designee) to promote effective and appropriate use of ADR at the Corporation in furtherance of this policy.

The FDIC welcomes and encourages input on the use of ADR and comment on current and potential uses of ADR from both within and outside the Corporation.

By order of the Board of Directors.

Dated at Washington, DC, the 11th day of December, 1996.

Federal Deposit Insurance Corporation.

Jerry L. Langley,

Executive Secretary.

[FR Doc. 97–562 Filed 1–9–97; 8:45 am]

BILLING CODE 6714–01–M

FEDERAL EMERGENCY MANAGEMENT AGENCY

[FEMA–3122–EM]

Hawaii; Amendment to Notice of a Presidential Declaration of an Emergency

AGENCY: Federal Emergency Management Agency (FEMA).

ACTION: Notice.

SUMMARY: This notice amends the notice of the Presidential declaration of an emergency for the State of Hawaii (FEMA–3122–EM), dated November 18, 1996, and related determinations.

EFFECTIVE DATE: December 11, 1996.

FOR FURTHER INFORMATION CONTACT: Magda Ruiz, Response and Recovery Directorate, Federal Emergency Management Agency, Washington, DC 20472, (202) 646–3260.

SUPPLEMENTARY INFORMATION: Notice is hereby given that the incident period for this emergency is closed effective December 9, 1996.

(Catalog of Federal Domestic Assistance No. 83.516, Disaster Assistance)

Lacy E. Suiter,

Executive Associate Director, Response and Recovery Directorate.

[FR Doc. 97–613 Filed 1–9–97; 8:45 am]

BILLING CODE 6718–02–P

[FEMA–1147–DR]

Hawaii; Amendment to Notice of a Major Disaster Declaration

AGENCY: Federal Emergency Management Agency (FEMA).

ACTION: Notice.

SUMMARY: This notice amends the notice of a major disaster for the State of Hawaii (FEMA–1147–DR), dated November 26, 1996, and related determinations.

EFFECTIVE DATE: December 11, 1996.

FOR FURTHER INFORMATION CONTACT: Magda Ruiz, Response and Recovery Directorate, Federal Emergency Management Agency, Washington, DC 20472, (202) 646–3260.

SUPPLEMENTARY INFORMATION: Notice is hereby given that the incident period for this disaster is closed effective December 9, 1996.

(Catalog of Federal Domestic Assistance No. 83.516, Disaster Assistance)

Lacy E. Suiter,

Executive Associate Director, Response and Recovery Directorate.

[FR Doc. 97–614 Filed 1–9–97; 8:45 am]

BILLING CODE 6718–02–P

[FEMA–1146–DR]

New York; Amendment to Notice of a Major Disaster Declaration

AGENCY: Federal Emergency Management Agency (FEMA).

ACTION: Notice.

SUMMARY: This notice amends the notice of a major disaster for the State of New York, (FEMA–1146–DR), dated November 19, 1996, and related determinations.

EFFECTIVE DATE: December 17, 1996.

FOR FURTHER INFORMATION CONTACT: Magda Ruiz, Response and Recovery Directorate, Federal Emergency Management Agency, Washington, DC 20472, (202) 646–3260.

SUPPLEMENTARY INFORMATION: The notice of a major disaster for the State of New York, is hereby amended to include Public Assistance in those areas determined to have been adversely affected by the catastrophe declared a major disaster by the President in his declaration of November 19, 1996:

Westchester County for Public Assistance and Hazard Mitigation.

Suffolk County for Public Assistance (already designated for Individual Assistance and Hazard Mitigation)

(Catalog of Federal Domestic Assistance No. 83.516, Disaster Assistance)

Lacy E. Suiter,

Executive Associate Director, Response and Recovery Directorate.

[FR Doc. 97–615 Filed 1–9–97; 8:45 am]

BILLING CODE 6718–02–P

[FEMA–1134–DR]

North Carolina; Amendment to Notice of a Major Disaster Declaration

AGENCY: Federal Emergency Management Agency (FEMA).

ACTION: Notice.

SUMMARY: This notice amends the notice of a major disaster for North Carolina, (FEMA–1134–DR), dated September 6, 1996, and related determinations.

EFFECTIVE DATE: December 6, 1996.

FOR FURTHER INFORMATION CONTACT: Magda Ruiz, Response and Recovery Directorate, Federal Emergency Management Agency, Washington, DC 20472, (202) 646–3260.

SUPPLEMENTARY INFORMATION: Notice is hereby given that, in a letter dated December 6, 1996, the President amended the cost-sharing arrangements concerning Federal funds provided under the authority of the Robert T. Stafford Disaster Relief and Emergency Assistance Act (42 U.S.C. 51521 *et seq.*), in a letter to James L. Witt, Director of the Federal Emergency Management Agency, as follows:

I have determined that the damage in certain areas of the State of North Carolina, resulting from Hurricane Fran on September 5 through October 21, 1996, is of sufficient severity and magnitude that special conditions are warranted regarding the cost-sharing arrangements concerning Federal funds provided under the Robert T. Stafford Disaster Relief and Emergency Assistance Act (''the Stafford Act'') for the Public Assistance program.

Therefore, I amend my previous declaration to authorize Federal funds for Public Assistance at 90 percent of total eligible costs, except for direct Federal assistance costs authorized at 100 percent Federal funding. This 90 percent reimbursement applies to all authorized Public Assistance costs, including debris removal to eliminate immediate threats to public health and safety, emergency work to save lives and protect public health and safety, and repair or reconstruction of uninsured public and private non-profit facilities.

This adjustment to State and local cost sharing applies only to Public Assistance costs eligible for such adjustment under the law. The law specifically prohibits a similar adjustment for funds provided to States for the Individual and Family Grant program. These funds will continue to be reimbursed at 75 percent of total eligible costs.

Please notify the Governor of the State of North Carolina and the Federal Coordinating Officer of this amendment to my major disaster declaration.

(Catalog of Federal Domestic Assistance No. 83.516, Disaster Assistance)

James L. Witt,

Director.

[FR Doc. 97–612 Filed 1–9–97; 8:45 am]

BILLING CODE 6718–02–P

FEDERAL MARITIME COMMISSION

Notice of Agreement(s) Filed

The Commission hereby gives notice of the filing of the following agreement(s) under the Shipping Act of 1984.

Interested parties can review or obtain copies of agreements at the Washington, DC offices of the Commission, 800 North Capitol Street, N.W., Room 962. Interested parties may submit comments on an agreement to the Secretary, Federal Maritime Commission, Washington, DC 20573, within 10 days of the date this notice appears in the Federal Register.

Agreement No.: 232–011481–003.

Title: AMA Agreement.

Parties:

Hanjin Shipping Co., Ltd.
Cho Yang Shipping Co., Ltd.
DSR–Senator Lines
United Arab Shipping Co. (S.A.G.) (''United Arab'')

Synopsis: The proposed amendment adds United Arab as a party to the Agreement. It also provides that the parties may charter or sub-charter space and/or vessels among themselves and further provides that any such space may be sub-chartered to third party VOCCs pursuant to lawfully effective agreements. The amendment would also permit parties to the Agreement to be both an owner and a charterer or a charterer only and makes other non-substantive changes to the Agreement.

Agreement No.: 224–201013.

Title: City of Los Angeles/American President Lines Non-exclusive Preferential Crane Assignment Agreement.

Parties:

City of Los Angeles (''City'')
American President Lines, Ltd. (''APL'')

Synopsis: The Agreement provides that the City will allow APL to use certain shipping cranes on a non-exclusive, preferential basis for an initial term which will expire, unless renewed, on July 31, 1997.

By order of the Federal Maritime Commission.

Dated: January 6, 1997.

Joseph C. Polking,

Secretary.

[FR Doc. 97–566 Filed 1–9–97; 8:45 am]

BILLING CODE 6730–01–M

Notice of Agreement(s) Filed

The Commission hereby gives notice of the filing of the following agreement(s) under the Shipping Act of 1984.

Interested parties can review or obtain copies of agreements at the Washington, DC offices of the Commission, 800 North Capitol Street, NW., Room 962. Interested parties may submit comments on an agreement to the Secretary, Federal Maritime Commission, Washington, DC 20573, within 10 days of the date this notice appears in the Federal Register.

Agreement No.: 232–011497–001.

Title: Unigreen Marine S.A./Flota Mercante Grancolombiana Space Charter and Sailing Agreement.

Parties:

Unigreen Marine S.A.
Flota Mercante Grancolombiana S.A.

Synopsis: The parties are amending their agreement to substitute Transportation Maritima Grancolombiana S.A. for Flota Mercante Grancolombiana S.A. as a party and to

add Costa Rica to the geographic scope of the agreement. The parties have requested shortened review.

Dated: January 7, 1997.

By Order of the Federal Maritime Commission.

Joseph C. Polking,

Secretary.

[FR Doc. 97–570 Filed 1–9–97; 8:45 am]

BILLING CODE 6730–01–M

FEDERAL RESERVE SYSTEM

Formations of, Acquisitions by, and Mergers of Bank Holding Companies

The companies listed in this notice have applied to the Board for approval, pursuant to the Bank Holding Company Act of 1956 (12 U.S.C. 1841 *et seq.*) (BHC Act), Regulation Y (12 CFR Part 225), and all other applicable statutes and regulations to become a bank holding company and/or to acquire the assets or the ownership of, control of, or the power to vote shares of a bank or bank holding company and all of the banks and nonbanking companies owned by the bank holding company, including the companies listed below.

The applications listed below, as well as other related filings required by the Board, are available for immediate inspection at the Federal Reserve Bank indicated. Once the application has been accepted for processing, it will also be available for inspection at the offices of the Board of Governors. Interested persons may express their views in writing on the standards enumerated in the BHC Act (12 U.S.C. 1842(c)). If the proposal also involves the acquisition of a nonbanking company, the review also includes whether the acquisition of the nonbanking company complies with the standards in section 4 of the BHC Act, including whether the acquisition of the nonbanking company can ''reasonably be expected to produce benefits to the public, such as greater convenience, increased competition, or gains in efficiency, that outweigh possible adverse effects, such as undue concentration of resources, decreased or unfair competition, conflicts of interests, or unsound banking practices'' (12 U.S.C. 1843). Any request for a hearing must be accompanied by a statement of the reasons a written presentation would not suffice in lieu of a hearing, identifying specifically any questions of fact that are in dispute, summarizing the evidence that would be presented at a hearing, and indicating how the party commenting would be aggrieved by approval of the proposal. Unless otherwise noted, nonbanking activities will be conducted throughout the United States.

Unless otherwise noted, comments regarding each of these applications must be received at the Reserve Bank indicated or the offices of the Board of Governors not later than February 4, 1997.

A. Federal Reserve Bank of Richmond (Lloyd W. Bostian, Jr., Senior Vice President) 701 East Byrd Street, Richmond, Virginia 23261:

1. Community Capital Corporation, Greenwood, South Carolina; to acquire 100 percent of Bank of Barnwell County, Barnwell, South Carolina (in organization), and 100 percent of the voting shares of The Bank of Belton, Belton, South Carolina (in organization).

Board of Governors of the Federal Reserve System, January 6, 1997.

Jennifer J. Johnson,

Deputy Secretary of the Board.

[FR Doc. 97–569 Filed 1–9–97; 8:45 am]

BILLING CODE 6210–01–F

Notice of Proposals to Engage in Permissible Nonbanking Activities or to Acquire Companies that are Engaged in Permissible Nonbanking Activities

The companies listed in this notice have given notice under section 4 of the Bank Holding Company Act (12 U.S.C. 1843) (BHC Act) and Regulation Y, (12 CFR Part 225) to engage *de novo*, or to acquire or control voting securities or assets of a company that engages either directly or through a subsidiary or other company, in a nonbanking activity that is listed in § 225.25 of Regulation Y (12 CFR 225.25) or that the Board has determined by Order to be closely related to banking and permissible for bank holding companies. Unless otherwise noted, these activities will be conducted throughout the United States.

Each notice is available for inspection at the Federal Reserve Bank indicated. Once the notice has been accepted for processing, it will also be available for inspection at the offices of the Board of Governors. Interested persons may express their views in writing on the question whether the proposal complies with the standards of section 4 of the BHC Act, including whether consummation of the proposal can ''reasonably be expected to produce benefits to the public, such as greater convenience, increased competition, or gains in efficiency, that outweigh possible adverse effects, such as undue concentration of resources, decreased or unfair competition, conflicts of interests, or unsound banking practices'' (12 U.S.C. 1843). Any request for a hearing on this question must be accompanied by a statement of the reasons a written presentation would not suffice in lieu of a hearing, identifying specifically any questions of fact that are in dispute, summarizing the evidence that would be presented at a hearing, and indicating how the party commenting would be aggrieved by approval of the proposal.

Unless otherwise noted, comments regarding the applications must be received at the Reserve Bank indicated or the offices of the Board of Governors not later than January 24, 1997.

A. Federal Reserve Bank of Minneapolis (Karen L. Grandstrand, Vice President) 250 Marquette Avenue, Minneapolis, Minnesota 55480:

1. Norwest Corporation, Minneapolis, Minnesota, and Norwest Financial Services, Inc., Des Moines, Iowa; to acquire The United Group, Inc., Charlotte, North Carolina, and thereby engage in making direct installment loans and purchasing sales finance contracts and merchant revolving charge accounts, pursuant to § 225.25(b)(1) of the Board's Regulation Y; in selling credit life, credit accident and health, property, and credit-related casualty insurance sales activities, pursuant to §§ 225.25(b)(8)(i),(ii), and (vii) of the Board's Regulation Y, and; in underwriting, directly or through reinsurance arrangements, credit life and credit accident and health insurance, pursuant to §§ 225.25(b)(8)(i),(ii), and (vii) of the Board's Regulation Y. These activities will be conducted in the States of North Carolina and South Carolina.

Board of Governors of the Federal Reserve System, January 6, 1997.

Jennifer J. Johnson,

Deputy Secretary of the Board.

[FR Doc. 97–568 Filed 1–9–97; 8:45 am]

BILLING CODE 6210–01–F

Sunshine Act Meeting

Agency Holding the Meeting: Board of Governors of the Federal Reserve System.

Time and Date: 10:00 a.m., Wednesday, January 15, 1997.

Place: Marriner S. Eccles Federal Reserve Board Building, C Street entrance between 20th and 21st Streets, N.W., Washington, D.C. 20551.

Status: Closed.

Matters to be Considered:

1. Personnel actions (appointments, promotions, assignments, reassignments, and salary actions) involving individual Federal Reserve System employees.

2. Any items carried forward from a previously announced meeting.

Contact Person for More Information: Mr. Joseph R. Coyne, Assistant to the Board; (202)

452–3204. You may call (202) 452–3207, beginning at approximately 5 p.m. two business days before this meeting, for a recorded announcement of bank and bank holding company applications scheduled for the meeting.

Dated: January 8, 1997.

Jennifer J. Johnson,

Deputy Secretary of the Board.

[FR Doc. 97–720 Filed 1–8–97; 10:32 am]

BILLING CODE 6210–01–P

FEDERAL TRADE COMMISSION

[File No. 961–0056]

Phillips Petroleum Company; Analysis to Aid Public Comment

AGENCY: Federal Trade Commission.

ACTION: Proposed consent agreement.

SUMMARY: In settlement of alleged violations of federal law prohibiting unfair or deceptive acts or practices and unfair methods of competition, this consent agreement, accepted subject to final Commission approval, would require, among other things, the Bartlesville, Oklahoma based company to divest approximately 160 miles of its natural gas pipeline system in Oklahoma. The agreement settles allegations that Phillips' acquisition of gas-gathering assets from ANR Pipeline Company would substantially reduce competition for natural gas gathering services in areas of five Oklahoma counties, because Phillips and ANR are the only, or two of very few, companies that provide gas gathering services in these areas. The Commission had alleged that the acquisition could have resulted in higher rates and reduced drilling and production.

DATES: Comments must be received on or before March 11, 1997.

ADDRESSES: Comments should be directed to: FTC/Office of the Secretary, Room 159, 6th St. and Pa. Ave., N.W., Washington, D.C. 20580.

FOR FURTHER INFORMATION CONTACT:

William J. Baer, Federal Trade Commission, H–374, 6th St. and Pa. Ave., N.W., Washington, D.C. 20580. (202) 326–2932.

George S. Cary, Federal Trade Commission, H–374, 6th St. and Pa. Ave., N.W., Washington, D.C. 20580. (202) 326–3741.

Phillip L. Broyles, Federal Trade Commission, S–2105, 6th St. and Pa. Ave., N.W., Washington, D.C. 20580. (202) 326–2805.

SUPPLEMENTARY INFORMATION: Pursuant to Section 6(f) of the Federal Trade Commission Act, 38 Stat. 721, 15 U.S.C. 46, and Section 2.34 of the Commission's Rules of Practice (16 CFR 2.34), notice is hereby given that the above-captioned consent agreement containing a consent order to cease and desist, having been filed with and accepted, subject to final approval, by the Commission, has been placed on the public record for a period of sixty (60) days. The following Analysis to Aid Public Comment describes the terms of the consent agreement, and the allegations in the accompanying complaint. An electronic copy of the full text of the consent agreement package can be obtained from the Commission Actions section of the FTC Home Page (for December 30, 1996), on the World Wide Web, at ''http://www.ftc.gov/os/actions/htm.'' A paper copy can be obtained from the FTC Public Reference Room, Room H–130, Sixth Street and Pennsylvania Avenue, N.W., Washington, D.C. 20580, either in person or by calling (202) 326–3627. Public comment is invited. Such comments or views will be considered by the Commission and will be available for inspection and copying at its principal office in accordance with Section 4.9(b)(6)(ii) of the Commission's Rules of Practice (16 CFR 4.9(b)(6)(ii)).

Analysis to Aid Public Comment on the Provisionally Accepted Consent Order

The Federal Trade Commission (''Commission'') has accepted for public comment from Phillips Petroleum Co. (''Phillips'') an agreement containing consent order. This agreement has been placed on the public record for sixty (60) days for reception of comments from interested persons.

Comments received during this period will become part of the public record. After sixty (60) days, the Commission will again review the agreement, the comments received, and will decide whether it should withdraw from the agreement or make final the agreement's order.

The Commission's investigation of this matter concerns Phillips' proposed acquisition, through its wholly-owned subsidiary, GPM Gas Services Corp., of certain pipeline gathering systems owned by ANR Pipeline Co. (''ANR''), a subsidiary of Coastal Corporation. Phillips and ANR are engaged in gas gathering—the transportation of natural gas, for their own or for others' use, from a wellhead or producing area to a gas transmission pipeline or a gas processing plant. The Commission's investigation of this matter found potential anticompetitive problems in certain areas within the following Oklahoma counties: Beaver, Ellis, Harper, Woods, and Woodward (''the Oklahoma counties''). For certain gas and oil producers in the Oklahoma counties, Phillips and ANR are the only, or two of very few, choices available to provide gas gathering services. The Commission was concerned that the proposed merger would eliminate competition between Phillips and ANR in providing gas gathering services. The Commission was also concerned that the proposed merger would lead to anticompetitive increases in gathering rates to these producers, and an overall reduction in gas drilling and production.

The Agreement Containing Consent Order would, if finally issued by the Commission, settle charges alleged in the Commission's Complaint that Phillips' acquisition of ANR's gas gathering systems substantially lessened competition in the gathering of natural gas in the Oklahoma counties. The nature of such competition to be preserved is the actual and potential competition to provide gas gathering services to producers and other customers. The Commission's Complaint further alleges that Phillips' acquisition agreement with ANR violates Section 7 of the Clayton Act and Section 5 of the Federal Trade Commission Act.

The order accepted for public comment contains provisions that would require Phillips to divest seven parts of a pipeline system, consisting of approximately 160 miles of pipe within the Oklahoma counties. The gas gathering assets to be divested are listed, with accompanying maps showing the locations of the pipelines, in Schedule A of the proposed Consent Order. Phillips must divest the assets by April 30, 1997 or 30 days following the consummation of the acquisition, whichever is later. The divestiture must be made to a person approved by the Commission and in a manner approved by the Commission. The purposes of the divestiture are to ensure the continued use of the Schedule A assets in the same type of business in which the assets are used at the time of the acquisition, and to remedy the lessening of competition resulting from the acquisition.

If Phillips does not divest the assets to a buyer acceptable to the Commission by the deadline, the Commission may appoint a trustee to sell the assets. The trustee may include additional assets with those specified in Schedule A to assure the marketability, viability, and competitiveness of the Schedule A assets so as to accomplish expeditiously the remedial purposes of the order.

For ten (10) years from the date that the order becomes final, the order would require prior Commission notification before Phillips could

acquire from any one person during any 18-month period more than five miles of gas gathering pipelines located within certain portions of the Oklahoma counties.

In a separate agreement with Phillips, the Commission expressed concern that it might not have an adequate legal remedy if the proposed acquisition were consummated prior to Commission action. Phillips has agreed to maintain the assets that are being divested in their current condition and provide gathering service at existing terms and conditions to customers under contract with ANR until the Schedule A assets are either sold or the Commission decides not to accept this order.

The purpose of this analysis is to invite public comment concerning the consent order. This analysis is not intended to constitute an official interpretation of the agreement and order or to modify their terms in any way.

Donald S. Clark,

Secretary.

[FR Doc. 97–606 Filed 1–9–97; 8:45 am]

BILLING CODE 6750–01–M

DEPARTMENT OF HEALTH AND HUMAN SERVICES

Agency for Health Care Policy and Research

Notice of Meeting

In accordance with section 10(a) of the Federal Advisory Committee Act (5 U.S.C., Appendix 2) announcement is made of the following special emphasis panel scheduled to meet during the month of February 1997:

Name: Health Care Policy and Research Special Emphasis Panel.

Date and Time: February 7, 1997, 8:00 a.m.

Place: Doubletree Hotel, 1750 Rockville Pike, Halpine Room, Rockville, Maryland 20852.

Open February 7, 1997, 8:00 a.m. to 8:15 a.m. Closed for remainder of meeting.

Purpose: This Panel is charged with conducting the initial review of grant applications requesting dissertation support for health services research undertaken as part of an academic program to qualify for a doctorate.

Agenda: The open session of the meeting on February 7 from 8:00 a.m. to 8:15 a.m., will be devoted to a business meeting covering administration matters. During the closed session, the panel will be reviewing and discussing grant applications dealing with health services research issues. In accordance with the Federal Advisory Committee Act, section 10(d) of 5 U.S.C., Appendix 2 and 5 U.S.C., 552b(c)(6), the Administrator, AHCPR, has made a formal determination that this latter session will be closed because the discussions are likely to reveal personal information concerning individuals associated with the grant applications. This information is exempt from mandatory disclosure.

Anyone wishing to obtain a roster of members or other relevant information should contact Carmen Johnson, Agency for Health Care Policy and Research, Suite 400, 2101 East Jefferson Street, Rockville, Maryland 20852, Telephone (301) 594–1449 x1613.

Agenda items for this meeting are subject to change as priorities dictate.

Dated: January 3, 1997.

Clifton R. Gaus,

Administrator.

[FR Doc. 97–654 Filed 1–9–97; 8:45 am]

BILLING CODE 4160–90–M

Food and Drug Administration

[Docket No. 95N–0200]

Guidance for the Submission of Chemistry, Manufacturing, and Controls Information and Establishment Description for Autologous Somatic Cell Therapy Products; Availability

AGENCY: Food and Drug Administration, HHS.

ACTION: Notice.

SUMMARY: The Food and Drug Administration (FDA) is announcing the availability of a guidance entitled ''Guidance for the Submission of Chemistry, Manufacturing, and Controls Information and Establishment Description for Autologous Somatic Cell Therapy Products.'' This guidance, prepared by the Center for Biologics Evaluation and Research (CBER) in consultation with the Center for Devices and Radiological Health, is intended to assist applicants in the preparation of the chemistry, manufacturing, and controls (CMC) section and the establishment description section of a biologics license application (BLA) or in the preparation of a product license application (PLA) and establishment license application (ELA) for all autologous somatic cell therapy products. This guidance may assist in complying with certain requirements in the Code of Federal Regulations.

DATES: Written comments may be submitted at any time; however, comments submitted by April 10, 1997, will be considered for the next revision.

ADDRESSES: Submit written requests for single copies of the guidance entitled, ''Guidance for the Submission of Chemistry, Manufacturing, and Controls Information and Establishment Description for Autologous Somatic Cell Therapy Products'' to the Office of Communication, Training and Manufacturers Assistance (HFM–40), Center for Biologics Evaluation and Research, Food and Drug Administration, 1401 Rockville Pike, Rockville, MD 20852–1448. Send one self-addressed adhesive label to assist that office in processing your requests. The document may also be obtained by mail or by calling the CBER Voice Information System at 1–800–835–4709, or 301–827–1800, or FAX at 1–800–CBER–FAX, or 301–827–3844.

Persons with access to the Internet may obtain the document in several ways. Users of ''Web Browser'' software, such as Mosaic, Netscape, or Microsoft Internet Explorer may obtain this document via the World Wide Web by using the following Uniform Resource Locators:

http://www.fda.gov/cber/cberftp.html
ftp://ftp.fda.gov/CBER/

The document may also be obtained via File Transfer Protocol (FTP). Requests should connect to the FDA's FTP Server, FTP.FDA.GOV(192.73.61.21). CBER documents are maintained in a subdirectory called ''CBER'' on the server. Logins with the user name of anonymous are permitted, and the user's e-mail address should be sent as the password. The ''READ.ME'' file in that subdirectory describes the available documents which may be available as an ASCII text file (*.TXT), or a Word Perfect 5.1 or 6.x document (*.w51,wp6), or both. Finally, the guidance can be obtained by ''bounce-back e-mail''. A message should be sent to: ''XVCMC@al.cber.fda.gov''.

Submit written comments on the guidance to the Dockets Managements Branch (HFA–305), Food and Drug Administration, 12420 Parklawn Dr., rm. 1–23, Rockville, MD 20857. Two copies of any comments are to be submitted, except that individuals may submit one copy. Requests and comments should be identified with the docket number found in brackets in the heading of this document. A copy of the guidance and received comments are available for public examination in the Dockets Management Branch between 9 a.m. and 4 p.m., Monday through Friday.

FOR FURTHER INFORMATION CONTACT: Sharon A. Carayiannis, Center for Biologics Evaluation and Research (HFM–630), Food and Drug Administration, 1401 Rockville Pike, Rockville, MD 20852–1448, 301–594–3074.

SUPPLEMENTARY INFORMATION:

Over the last several years, FDA has worked to clarify its approach to the

regulation of products that are comprised in whole or in part of living cellular materials. Recognizing that sponsors developing tissue and cell based therapies would soon want to make these products commercially available, FDA issued a notice in the Federal Register of October 14, 1993 (58 FR 53248), entitled ''Application of Current Statutory Authorities to Human Somatic Cell Therapy Products and Gene Cell Therapy Products;'' this notice explained the regulatory framework for somatic cell and gene therapy products, but it did not provide detailed technical guidance. As announced in the Federal Register of July 18, 1995 (60 FR 36808), FDA held a public hearing on November 16 and 17, 1995, to solicit information on the nature and diversity of a subset of autologous somatic cell therapy products for structural repair or reconstruction called manipulated autologous structural cell products (MAS cell products) and to receive comments on the formulation and implementation of any new regulatory requirements. As announced in the Federal Register of March 7, 1996 (61 FR 9185), the agency held a Commissioner's roundtable public meeting on March 15, 1996, to present the elements of a planned regulatory framework intended to help ensure patient safety and confirmation of patient benefit, while accommodating the development of these therapies and the need for a flexible regulatory approach. Many of the concepts presented at the meetings were derived from ongoing FDA Reinventing Government initiatives. In the Federal Register of May 28, 1996 (61 FR 26523), FDA announced the availability of a guidance document entitled ''Guidance on Applications for Products Comprised of Living Autologous Cells Manipulated Ex Vivo and Intended for Structural Repair or Reconstruction.'' FDA now is providing the CMC guidance document that describes product characterization and establishment information for MAS cell products and other autologous somatic cell therapy products. This document is intended to assist manufacturers of all autologous somatic cell therapy products, whether used for structural repair or reconstruction, or for other purposes.

As outlined in the President's November 1995, National Performance Review, ''Reinventing the Regulation of Drugs Made From Biotechnology,'' and as part of FDA's continuing effort to reduce unnecessary burdens for industry without diminishing public health protection, FDA committed to using a standardized, single application format for drug and biological product approvals. An interim form for submission of the BLA, FDA Form 3439, is available from the Office of Communication, Training and Manufacturers Assistance (address above). Use of this form is voluntary. Establishments wishing to engage in clinical studies of autologous somatic cell therapy products, including MAS cell products, should submit an investigational new drug application (IND). Establishments seeking approval of autologous somatic cell therapy products for clinical use should either submit, as appropriate, a BLA or a product license application (PLA) and companion establishment license application (ELA).

The information FDA received at the public hearing of November 16 and 17, 1995, as well as comments received on the FDA Commissioner's roundtable meeting of March 15, 1996, were considered in developing the guidance for preparation of the CMC and establishment description sections of the BLA for autologous somatic cell therapy products.

The guidance document is divided into three parts. The general information section provides background information. Part 1, the CMC section, is divided into the following sections: (1) Introduction; (2) Biological Substance/Product, including discussions of Description and Characterization, Manufacturer(s), and Method(s) of Manufacture, Process Controls, Specifications/Analytical Methods, Container and Closure Systems/Shipping Containers, and Biological Substance Stability; (3) Biological Product, including discussions of Method(s) of Manufacture and Packaging, Specifications and Test Methods for Final Biological Product, Biological Product Stability, Container and Closure System, and Microbiology; (4) Environmental Assessment; and (5) Method Validation. Part 2, the establishment description section, provides a description of establishment information that should be submitted and related good manufacturing practice (GMP) controls for the manufacture of autologous somatic cell therapy products. Part 2 is divided into the following sections: (1) Introduction; (2) General Information; (3) Water Systems, including discussions of General Description of Water System, Validation Summary and Routine Monitoring; (4) Heating, Ventilation and Air Conditioning Systems; and (5) Contamination/Cross Contamination Issues, including discussions of Cleaning Procedures and Validation and Containment Features. This document provides guidance to manufacturers for providing the information describing establishment standards and GMP controls that would be submitted as part of the BLA or PLA and ELA.

As with other procedural guidance documents, FDA does not intend that this guidance would be all-inclusive. Alternative approaches could be warranted in specific situations, and certain aspects might not be applicable in all situations. If an applicant believed a procedure described in this guidance was inapplicable to a specific situation for a particular product, the applicant could provide, for CBER's consideration, information supporting an alternative process. If an applicant chooses to use alternative processes, the applicant may wish to discuss the matter further with the agency to prevent expenditure of money and resources on activities that later might be determined to be inappropriate by FDA. Additionally, FDA intends to further revise this guidance, as needed. FDA also encourages applicants who use the BLA to contact CBER to discuss use of the application further inasmuch as the agency's experience with its use will evolve. Although this guidance document does not create or confer any rights for or on any person, and does not operate to bind FDA or the public, it does represent the agency's current thinking on the CMC and establishment description sections of a BLA or PLA and ELA submitted for an autologous somatic cell therapy product.

Interested persons may, on or before April 10, 1997, submit written comments on the guidance document to the Dockets Management Branch (address above). Two copies of any comments are to be submitted, except that individuals may submit one copy. Comments and information are to be identified with the

docket number found in brackets in the heading of this document. The guidance and received comments may be seen in the office above between 9 a.m. and 4 p.m., Monday through Friday.

Written comments on this document will be considered in determining whether revisions to the guidance are warranted.

Dated: January 6, 1997.

William K. Hubbard,

Associate Commissioner for Policy Coordination.

[FR Doc. 97–579 Filed 1–9–97; 8:45 am]

BILLING CODE 4160–01–F

Statement of Organization, Functions, and Delegations of Authority

Part H, Chapter HF (Food and Drug Administration) of the Statement of Organization, Functions, and Delegations of Authority for the Department of Health and Human Services (35 FR 3685, February 25, 1970, and 56 FR 29484, June 27, 1991, as amended most recently in pertinent part at 60 FR 65350, December 19, 1995) is amended to reflect the realignment of the Office of Health and Industry Programs, Center for Devices and Radiological Health (CDRH), Office of Operations, in the Food and Drug Administration (FDA).

The Immediate Office of the Director, Office of Health and Industry Programs will consist of two new staffs; the Regulations Staff and the Staff College. CDRH believes that the establishment of these two new staffs within the Immediate Office of the Director, Office of Health and Industry Programs, will increase visibility to important program areas of the Center.

Under section HF–B, Organization:

1. Insert the following new subparagraphs under paragraph *Office of Health and Industry Programs (HFWG), Center for Devices and Radiological Health (HFW)*, reading as follows:

Program Operations Staff (HFWG–1). Provides all necessary administrative support to the Office.

Provides services to track the status of on-going Office programs as well as all incoming and outgoing congressional and FDA or Center-tracked correspondence.

Provides personnel computer support to Office staff including the evaluation of hardware and software, installation of hardware and software and assistance in resolving hardware and software problems.

Responds to public and government requests for information about medical device and radiation-emitting products. Serves as the Center Consumer Affairs Representative.

Regulations Staff (HFWG–2). Advises the Center Director and appropriate Agency officials on FDA regulation development responsibilities relating to medical devices and radiological health activities. Serves as the Center focal point for liaison on regulations development activities with the Office of Chief Counsel.

Coordinates the development, review and submission of Federal Register publications for the Center. Prepares position statements for the Center on standards promulgated by other organizations.

Staff College (HFWG–3). Develops necessary training courses for Center employees by providing continuing education credits for selected programs; providing live satellite teleconferences and distance learning telecasts; and coordinating and sponsoring a variety of seminars and lectures.

Performs needs assessments and develops training objectives. Designs courses and course evaluations.

2. Prior Delegations of Authority. Pending further delegations, directives, or orders by the Commissioner of Food and Drugs, all delegations of authority to positions of the affected organizations in effect prior to this date shall continue in effect in them or their successors.

Dated: December 13, 1996.

Michael A. Friedman,

Deputy Commissioner for Operations.

[FR Doc. 97–578 Filed 1–9–97; 8:45 am]

BILLING CODE 4160–01–F

Health Resources and Services Administration

Agency Information Collection Activities: Proposed Collection: Comment Request

In compliance with the requirement of Section 3506(c)(2)(A) of the Paperwork Reduction Act of 1995 for opportunity for public comment on proposed data collection projects, the Health Resources and Services Administration (HRSA) will publish periodic summaries of proposed projects being developed for submission to OMB under the Paperwork Reduction Act of 1995. To request more information on the proposed project or to obtain a copy of the data collection plans, call the HRSA Reports Clearance Officer on (301) 443–1129.

Comments are invited on: (a) whether the proposed collection of information is necessary for the proper performance of the functions of the agency, including whether the information shall have practical utility; (b) the accuracy of the agency's estimate of the burden of the proposed collection of information; (c) ways to enhance the quality, utility, and clarity of the information to be collected; and (d) ways to minimize the burden of the collection of information on respondents, including through the use of automated collection techniques or other forms of information technology.

Proposed Project

Black Lung Clinic Program Regulatory Requirements (42 CFR 55a) (OMB No. 0915–0081) Extension/No Change—The purpose of the Black Lung Clinics Program (BLCP) is to stimulate and encourage local public and private agencies to improve the health status of coalworkers and to increase coordination with other programs to assist the coalworkers population. The goal of the BLCP is to provide services to minimize the effects of respiratory and pulmonary impairments of coal miners. Grantees provide specific diagnostic and treatment procedures required in the management of problems associated with black lung disease which improve the functional status, i.e., ''quality of life'', of the miner and reduce economic costs associated with morbidity and mortality arising from pulmonary diseases.

This request is for approval of the reporting and recordkeeping requirements in program regulations as follows:

1. 42 CFR 55a.201 and 55a.301—Reporting—Grantees must submit applications for continued grant support. The regulations outline the requirements for grant applications for States (55a.201) and for entities other than States (55a.301).

2. 42 CFR 55a.201 (a) (3)—Recordkeeping—The regulations require that grantees conduct outreach to active and inactive miners, which requires maintenance of a register of persons with pulmonary impairments.

3. 42 CFR 55a.201 (a) (4)—Recordkeeping—The regulations require that individual patient care plans be provided for all patients. This includes development and periodic updating of the patient plans.

Estimates of annualized hour burden are as follows:

Regulatory requirement [1]	Number of record-keepers	Annual hours per record-keeper	Total burden
55a.201(a)(3)—patient registry	14	357	5,000
55a.201(a)(4)—development of patient plans	14	1,214	17,000

Regulatory requirement [1]	Number of record-keepers	Annual hours per record-keeper	Total burden
55a.201(a)(4)—patient plan update	14	1,429	20,000
Total	14	3,000	42,000

[1] The grant application form is cleared under another OMB approval (OMB No. 0937–0189). The burden for completing the application is not reflected in the table above because the burden is reported in the clearance of the application form.

Send comments to Patricia Royston, HRSA Reports Clearance Officer, Room 14–36, Parklawn Building, 5600 Fishers Lane, Rockville, MD 20857. Written comments should be received within 60 days of this notice.

Dated: January 7, 1997.

J. Henry Montes,

Director, Office of Policy and Information Coordination.

[FR Doc. 97–580 Filed 1–9–97; 8:45 am]

BILLING CODE 4160–15–P

National Institutes of Health

Proposed Collection; Comment Request; Special Volunteer and Guest Researcher Assignment

SUMMARY: In compliance with the requirement of Section 3506 (c)(2)(A) of the Paperwork Reduction Act of 1995, for opportunity for public comment on proposed data collection projects, the Office of the Director, National Institutes of Health (HIH) will publish periodic summaries of proposed projects to be submitted to the Office of Management and Budget (OMB) for review and approval.

PROPOSED COLLECTION: *Title:* Special Volunteer and Guest Researcher Assignment. *Type of Information Collection Request:* Revision of OMB No. 0925–0177; 4/30/97. *Need and Use of Information Collection:* Form NIH –590 records, names, address, employer, education, and other information on prospective Special Volunteers and Guest Researchers, and is used by the responsible NIH approving official to determine the individual's qualifications and eligibility for such assignments. The form is the only official record of approved assignment. *Frequency of Response:* On occasion. *Affected Public:* Individuals or households. *Type of Respondents:* Guest Researcher and Special Volunteer candidates. *Estimated Number of Respondents:* 1560. *Estimated Number of Responses Per Respondent:* 1. *Average Burden Hours Per Response:* .08. *Estimated Total Annual Burden Hours Requested:* 125.

There are no Capital Costs, Operating Costs, and/or Maintenance Costs to report.

Type of respondents	Estimated number of respondents	Estimated number of responses per respondent	Average burden hours per response	Estimated total annual burden hours requested
Guest Researcher	370	1	.08	29.6
Special Volunteer	1190	1	.08	95.2
Total	1560	1	.08	125

Request for Comments

Written comments and/or suggestions from the public and affected agencies are invited on one or more of the following points: (1) Whether the proposed collection of information is necessary for the proper performance of the agency, including whether the information will have practical utility; (2) The accuracy of the agency's estimate of the proposed collection of information, including the validity of the methodology and assumptions used; (3) Ways to enhance the quality, utility, and the clarity of information to be collected; and (4) Ways to minimize the burden of the collection of information on those who are to respond, including the use of appropriate automated, electronic, mechanical, or other technological collection techniques or other forms of information technology.

FOR FURTHER INFORMATION: To request more information on the proposed project or to obtain a copy of the data collection plans and instruments, contact: Yetta Patterson, Personnel Management Specialist, Office of Human Resource Management, OD, NIH Building 31, Room 1C39, 31 Center Drive MSC 2272, Bethesda, MD 20892–2272.

COMMENTS DUE DATE: Comments regarding this information collection are best assured of having their full effect if received on or before March 11, 1997.

Dated: December 26, 1996.

Marvene S. Horwitz,

Acting Director, Office of Human Resource Management.

[FR Doc. 97–640 Filed 1–9–97; 8:45 am]

BILLING CODE 4140–01–M

Proposed Collection: Comment Request; NIH Intramural Research Training Award, Program Application

SUMMARY: In compliance with the requirement of Section 3506(c)(2)(A) of the paperwork Reduction Act of 1995, for opportunity for public comment on proposed data collection projects, the Office of the Director, National Institutes of Health (NIH) will publish periodic summaries of proposed projects to be submitted to the Office of Management and Budget (OMB) for review and approval.

PROPOSED COLLECTION: *Title:* NIH Intramural Research Training Award, Program Application. *Type of Information Collection Request:* Revision of OMB No. 0925–0299; 4/30/97. *Need and Use of Information Collection:* The proposed information collection activity is for the purpose of collecting data related to the availability of training fellowships under the NIH Intramural Research Training Award Program. This information must be submitted in order to receive due consideration for an award and will be used to determine the eligibility and quality of potential awardess. *Frequency of Response:* On occasion. *Affected Public:* Individuals or households. *Type of Respondents:* Postdoctoral, Predoctoral, Supplemental, Technical,

Summer, and Student Support IRTA applicants. *Estimated Number of Respondents:* 12110. *Estimated Number of Responses Per Respondent:* 1. *Average Burden Hours Per Response:* 54. *Estimated Total Annual Burden House Requested:* 6542.

There are no Capital Costs, Operating Costs, and/or Maintenance Costs to report.

Type of respondents	Estimated number of respondents	Estimated number of responses per respondent	Average burden hours per response	Estimated total annual burden hours requested
Postdoctoral IRTA	600	1	1	600
Predoctoral IRTA	100	1	1	100
Supplemental IRTA	10	1	1	10
Technical IRTA	60	1	1	60
Summer IRTA	3000	1	1	3000
Student Support IRTA	30	1	1	30
References	8310		.33	2742
Total	12110	1	.54	6542

Request for Comments

Written comments and/or suggestions from the public and affected agencies are invited on one or more of the following points: (1) Whether the proposed collection of information is necessary for the proper performance of the agency, including whether the information will have practical utility; (2) The accuracy of the agency's estimate of the proposed collection of information, including the validity of the methodology and assumptions used; (3) Ways to enhance the quality, utility, and the clarity of information to be collected; and (4) Ways to minimize the burden of the collection of information on those who are to respond, including the use of appropriate automated, electronic, mechanical, or other technological collection techniques or other forms of information technology.

FOR FURTHER INFORMATION CONTACT: To request more information on the proposed project or to obtain a copy of the data collection plans and instruments, contact: Yetta Patterson, Personnel Management Specialist, Office of Human Resource Management, OD, NIH, Building 31, Room 1C39, 31 Center Drive MSC 2272, Bethesda, MD 20892–2272.

COMMENTS DUE DATE: Comments regarding this information collection are best assured of having their full effect if received within 60 days of the date of this publication.

Dated: December 26, 1996.

Marvene S. Horwitz,

Acting Director, Office of Human Resource Management.

[FR Doc. 97–641 Filed 1–9–97; 8:45 am]

BILLING CODE 4140–01–M

National Institute of Mental Health; Notice of Closed Meetings

Pursuant to Section 10(d) of the Federal Advisory Committee Act, as amended (5 U.S.C. Appendix 2), notice is hereby given of the following meetings of the National Institute of Mental Health Initial Review Group:

Agenda/Purpose: To review and evaluate grant applications.

Committee Name: Clinical Psychopathology Review Committee.

Date: February 6–February 7, 1997.

Time: 8:30 a.m.

Place: Hyatt Regency Bethesda, One Bethesda Metro Center, Bethesda, MD 20814.

Contact Person: Gavin T. Wilkom, Parklawn, Room 9C–18, 5600 Fishers Lane, Rockville, MD 20857, Telephone: 301, 443–4868.

Committee Name: Neuropharmacology and Neurochemistry Review Committee.

Date: February 6–February 7, 1997.

Time: 8 a.m.

Place: Chevy Chase Holiday Inn, 5520 Wisconsin Avenue, Chevy Chase, MD 20815.

Contact Person: Donna Ricketts, Parklawn, Room 9–101, 5600 Fishers Lane, Rockville, MD 20857, Telephone: 301, 443–3936.

Committee Name: Health Behavior and Prevention Review Committee.

Date: February 10–February 11, 1997.

Time: 8:30 a.m.

Place: Embassy Suites, 4300 Military Road, N.W., Washington, DC 20015.

Contact Person: Monica F. Woodfork, Parklawn, Room 9C–26, 5600 Fishers Lane, Rockville, MD 20857, Telephone: 301, 443–4843.

Committee Name: Services Research Review Committee.

Date: February 11–February 12, 1997.

Time: 8:30 a.m.

Place: Hyatt Regency Bethesda, One Bethesda Metro Center, Bethesda, MD 20814.

Contact Person: Gavin T. Wilkom, Parklawn, Room 9C–18, 5600 Fishers Lane, Rockville, MD 20857, Telephone: 301, 443–4868.

Committee Name: Clinical Neuroscience and Biological Psychopathology Review Committee.

Date: February 12–February 14, 1997.

Time: 9 a.m.

Place: One Washington Circle, One Washington Circle, N.W., Washington, DC 20037.

Contact Person: Maureen L. Eister, Parklawn, Room 9–101, 5600 Fishers Lane, Rockville, MD 20857, Telephone: 301, 443–3936.

Committee Name: Mental Disorders of Aging Review Committee.

Date: February 13–February 14, 1997.

Time: 8:30 a.m.

Place: Hampshire Hotel, 1310 New Hampshire Ave., N.W., Washington, DC 20036.

Contact Person: Richard Johnson, Parklawn, Room 9C–18, 5600 Fishers Lane, Rockville, MD 20857, Telephone: 301, 443–1367.

Committee Name: Clinical Centers and Special Projects Review Committee.

Date: February 13–February 21, 1997.

Time: 8 a.m.

Place: Hyatt Regency Bethesda, One Bethesda Metro Center, Bethesda, MD 20814.

Contact Person: W. Gregory Zimmerman, Parklawn, Room 9C–18, 5600 Fishers Lane, Rockville, MD 20857, Telephone: 301, 443–4868.

Committee Name: Psychobiology, Behavior, and Neuroscience Review Committee.

Date: February 20–February 21, 1997.

Time: 9 a.m.

Place: Renaissance Hotel, Downtown, 999 9th Street, Washington, DC 20001.

Contact Person: Deborah A. DeMasse, , Parklawn, Room 9–101, 5600 Fishers Lane, Rockville, MD 20857, Telephone: 301, 443–3936.

Committee Name: Violence and Traumatic Stress Review Committee.

Date: February 20–February 21, 1997.

Time: 9 a.m.

Place: Double Tree Hotel, 1750 Rockville Pike, Rockville, MD 20852.

Contact Person: Sheri L. Schwartzback, Parklawn, Room 9C–26, 5600 Fishers Lane, Rockville, MD 20857, Telephone: 301, 443–4843.

Committee Name: Social and Group Processes Review Committee.

Date: February 20–February 21, 1997.

Time: 9 a.m.
Place: Hyatt Regency Bethesda, One Bethesda Metro Center, Bethesda, MD 20814.
Contact Person: Rehana A. Chowdhury, Parklawn, Room 9C–26, 5600 Fishers Lane, Rockville, MD 20857, Telephone: 301, 443–6470.

Committee Name: Child/Adolescent Development, Risk, and Prevention Review Committee.
Date: February 20–February 21, 1997.
Time: 9 a.m.
Place: Chevy Chase Holiday Inn, 5520 Wisconsin Avenue, Chevy Chase, MD 20815.
Contact Person: Phyllis D. Artis, Parklawn, Room 9C–26, 5600 Fishers Lane, Rockville, MD 20857, Telephone: 301, 443–6470.

Committee Name: Cognitive Functional Neuroscience Review Committee.
Date: February 20–February 21, 1997.
Time: 8:30 a.m.
Place: Hyatt Regency Bethesda, One Bethesda Metro Center, Bethesda, MD 20814.
Contact Person: Shirley H. Maltz, Parklawn, Room 9–101, 5600 Fishers Lane, Rockville, MD 20857, Telephone 301, 443–3936.

Committee Name: Molecular, Cellular, and Developmental Neurobiology Review Committee.
Date: February 24–February 25, 1997.
Time: 8 a.m.
Place: Hyatt Regency Bethesda, One Bethesda Metro Center, Bethesda, MD 20814.
Contact Person: Donna Ricketts, Parklawn, Room 9–101, 5600 Fishers Lane, Rockville, MD 20857, Telephone 301, 443–3936.

Committee Name: Epidemiology and Genetics Review Committee.
Date: February 24–February 25, 1997.
Time: 8:30 a.m.
Place: Hyatt Regency Bethesda, One Bethesda Metro Center, Bethesda, MD 20814.
Contact Person: Shirley Williams, Parklawn, Room 9C–18, 5600 Fishers Lane, Rockville, MD 20857, Telephone 301, 443–1367.

Committee Name: Child Psychopathology and Treatment Review Committee.
Date: February 27–February 28, 1997.
Time: 8:30 a.m.
Place: Hyatt Regency Bethesda, One Bethesda Metro Center, Bethesda, MD 20814.
Contact Person: Richard Johnson, Parklawn, Room 9C–18, 5600 Fishers Lane, Rockville, MD 20857, Telephone: 301, 443–1367.

Committee Name: Perception and Cognition Review Committee.
Date: February 27–February 28, 1997.
Time: 9 a.m.
Place: Bethesda Holiday Inn, 8120 Wisconsin Avenue, Bethesda, MD 20814.
Contact Person: Regina M. Thomas, Parklawn, Room 9C–26, 5600 Fishers Lane, Rockville, MD 20857, Telephone: 301, 443–6470.

Committee Name: Treatment Assessment Review Committee.
Date: March 3–March 4, 1997.
Time: 8:30 a.m.
Place: Hyatt Regency Bethesda, One Bethesda Metro Center, Bethesda, MD 20814.
Contact Person: Gavin T. Wilkom, Parklawn, Room 9C–18, 5600 Fishers Lane, Rockville, MD 20857, Telephone 301, 443–4868.

Committee Name: Mental Health AIDS and Immunology Review Committee—2.
Date: March 4–March 5, 1997.
Time: 8:30 a.m.
Place: Hyatt Regency Bethesda, One Bethesda Metro Center, Bethesda, MD 20814.
Contact Person: Rehana A. Chowdhury, Parklawn, Room 9C–26, 5600 Fishers Lane, Rockville, MD 20857, Telephone: 301, 443–6470.

Committee Name: Mental Health AIDS and Immunology Review Committee—1.
Date: March 10, 1997.
Time: 8:30 a.m.
Place: Chevy Chase Holiday Inn, 5520 Wisconsin Avenue, Chevy Chase, MD 20815.
Contact Person: Regina M. Thomas, Parklawn, Room 9C–26, 5600 Fishers Lane, Rockville, MD 20857, Telephone: 301, 443–6470.

The meetings will be closed in accordance with the provisions set forth in secs. 552b(c)(4) and 552b(c)(6), Title 5, U.S.C. Applications and/or proposals and the discussions could reveal confidential trade secrets or commercial property such as patentable material and personal information concerning individuals associated with the applications and/or proposals, the disclosure of which would constitute a clearly unwarranted invasion of personal privacy.

(Catalog of Federal Domestic Assistance Program Numbers 93.242, 93.281, 93.282)

Dated: January 6, 1997.

Paula N. Hayes,

Acting Committee Management Officer, NIH.

[FR Doc. 97–639 Filed 1–9–97; 8:45 am]

BILLING CODE 4140–01–M

National Institute on Alcohol Abuse and Alcoholism; Notice of Meeting

Pursuant to Pub. L. 92–463, notice is hereby given of a meeting of the National Advisory Council on Alcohol Abuse and Alcoholism on February 13, 1997.

The meeting will be open to the public, as noted below, to discuss Institute programs and other issues relating to committee activities as indicated in the notice. Attendance by the public will be limited to space available. Individuals who plan to attend and need special assistance, such as sign language interpretation or other reasonable accommodations, should contact Ms. Ida Nestorio at 301–443–4376.

The meeting will be closed to the public as indicated below in accordance with the provisions set forth in secs. 552b(c)(4) and 552b(c)(6) of Title 5, U.S.C. and sec. 10(d) of Public Law 92–463 for the review, discussion and evaluation of individual research grant applications. These applications and the discussions could reveal confidential trade secrets or commercial property such as patentable material, and personal information concerning individuals associated with the applications and programs, the disclosure of which would constitute a clearly unwarranted invasion of personal privacy.

A summary of the meeting and the roster of committee members may be obtained from: Ms. Ida Nestorio, Office of Scientific Affairs, National Institute on Alcohol Abuse and Alcoholism, Willco Building, Suite 409, 6000 Executive Blvd., Rockville, MD 20892–7003, Telephone: 301–443–4376. Other information pertaining to the meeting may be obtained from the contact person indicated.

Name of Committee: National Advisory Council on Alcohol Abuse and Alcoholism.
Executive Secretary: James F. Vaughan, 6000 Executive Blvd., Suite 409, Bethesda, MD 20892–7003, 301–443–4375.
Date of Meeting: February 13, 1997.
Place of Meeting: Conference Room E1 & E2, Building 45 (Natcher), NIH Campus, 9000 Rockville Pike, Bethesda, MD 20892.
Closed: February 13, 1997—8:00 a.m. to 10:00 a.m.
Agenda: To review and evaluate grant applications.
Open: February 13, 1997—10:00 a.m. to 5:00 p.m.
Agenda: Discussion of Institute extramural research programs, and other program and peer review issues relevant to Council activities.

(Catalog of Federal Domestic Assistance Program No. 93.271, Alcohol Research Career Development Awards for Scientists and Clinicians; 93.272, Alcohol National Research Service Awards for Research Training; 93.891, Alcohol Research Center Grants; National Institutes of Health)

Dated: January 6, 1997.

Paula N. Hayes,

Acting Committee Management Officer, NIH.

[FR Doc. 97–636 Filed 1–9–97; 8:45 am]

BILLING CODE 4140–01–M

National Institute on Drug Abuse; Notice of Closed Meeting

Pursuant to Section 10(d) of the Federal Advisory Committee Act, as amended (5 U.S.C. Appendix 2), notice is hereby given of the following National Institute on Drug Abuse (NIDA) Special Emphasis Panel meeting:

Purpose/Agenda: To evaluate and review contract proposals.
Name of Committee: NIDA Special Emphasis Panel.
Date: January 22, 1997.
Time: 9:00 a.m.

Place: Bethesda Marriott, 5151 Pooks Hill Road, Bethesda, MD 20814.

Contact Person: Mr. Eric Zatman, Contract Review Specialist, Office of Extramural Program Review, National Institute on Drug Abuse, 5600 Fishers Lane, Room 10–42, Telephone (301) 443–1644.

This notice is being published less than 15 days prior to the meeting due to the urgent need to meet timing limitations imposed by the review and funding cycle.

The meeting will be closed in accordance with provisions set forth in secs. 552b(c)(4) and 552b(c)(6), Title 5, U.S.C. The proposals and the discussions could reveal confidential trade secrets or commercial property such as patentable material and personal information concerning individuals associated with the applications, the disclosure of which would constitute a clearly unwarranted invasion of personal privacy.

(Catalog of Federal Domestic Assistance Program Numbers: 93.277, Drug Abuse Scientific Development, Research Scientist Development, and Research Scientist Awards; 93.278, Drug Abuse National Research Service Awards for Research Training; 93.279, Drug Abuse Research Program, National Institutes of Health)

Dated: January 6, 1997.

Paula N. Hayes,

Acting Committee Management Officer, NIH.

[FR Doc. 97–637 Filed 1–9–97; 8:45 am]

BILLING CODE 4140–01–M

National Institute of Mental Health; Notice of Closed Meeting

Pursuant to Section 10(d) of the Federal Advisory Committee Act, as amended (5 U.S.C. Appendix 2), notice is hereby given of the following meeting of the National Institute of Mental Health Initial Review Group:

Agenda/Purpose: To review and evaluate grant applications.

Committee Name: Mental Health Small Business Research Review Committee.

Date: February 24–February 25, 1997.

Time: 8:30 a.m.

Place: River Inn, 924 25th Street NW, Washington, DC 20037.

Contact Person: Yolanda M. Davis-White, Parklawn, Room 9C–18, 5600 Fishers Lane, Rockville, MD 20857, Telephone: 301, 443–1367.

The meeting will be closed in accordance with the provisions set forth in secs. 552b(c)(4) and 552b(c)(6), Title 5, U.S.C. Applications and/or proposals and the discussions could reveal confidential trade secrets or commercial property such as patentable material and personal information concerning individuals associated with the applications and/or proposals, the disclosure of which would constitute a clearly unwarranted invasion of personal privacy.

(Catalog of Federal Domestic Assistance Program Numbers 93.242, 93.281, 93.282)

Dated: January 6, 1997.

Paula N. Hayes,

Acting Committee Management Officer, NIH.

[FR Doc. 97–638 Filed 1–9–97; 8:45 am]

BILLING CODE 4140–01–M

DEPARTMENT OF HOUSING AND URBAN DEVELOPMENT

[Docket No. FR–4124–N–20]

Federal Property Suitable as Facilities To Assist the Homeless

AGENCY: Office of the Assistant Secretary for Community Planning and Development, HUD.

ACTION: Notice.

SUMMARY: This Notice identifies unutilized, underutilized, excess, and surplus Federal property reviewed by HUD for suitability for possible use to assist the homeless.

EFFECTIVE DATE: January 10, 1997.

FOR FURTHER INFORMATION CONTACT: Mark Johnston, Department of Housing and Urban Development, Room 7256, 451 Seventh Street SW., Washington, DC 20410; telephone (202) 708–1226; TDD number for the hearing- and speech-impaired (202) 708–2565, (these telephone numbers are not toll-free), or call the toll free Title V information line at 1–800–927–7588.

SUPPLEMENTARY INFORMATION: In accordance with the December 12, 1988 court order in *National Coalition for the Homeless* versus *Veterans Administration*, No. 88–2503–OG (D.D.C.), HUD publishes a Notice, on a weekly basis, identifying unutilized, underutilized, excess and surplus Federal buildings and real property that HUD has reviewed for suitability for use to assist the homeless. Today's Notice is for the purpose of announcing that no additional properties have been determined suitable or unsuitable this week.

Dated: January 3, 1997.

Jacquie M. Lawing,

Deputy Assistant Secretary for Economic Development.

[FR Foc. 97–408 Filed 1–9–97; 8:45 am]

BILLING CODE 4210–29–M

DEPARTMENT OF THE INTERIOR

Office of the Secretary

Tribal Self-Governance Notice of Availability of Self-Governance Negotiation/Planning Grants

AGENCY: Office of self-Governance, Office of the Secretary, Interior.

ACTION: Notice of grants availability.

SUMMARY: In this notice, the Office of Self-Governance (OSG) announces the availability of fiscal year 1997 negotiation grants (up to 10 grants of no more than $40,000 each); advance planning grants (up to 5 grants of no more than $50,000 each); and negotiation/planning grants to negotiate for DOI non-BIA programs (up to 10 grants of no more than $40,000 each). The timeframes for application and selection vary with each type of grant and are specified in this announcement.

DATES: Applications must be submitted in accordance with the table below:

Type of grant	Deadline for submitting application
Negotiation	March 31, 1997.
Advance Planning	May 1, 1997.
Negotiation/Planning	March 31, 1997.

ADDRESSES: Completed applications for grants should be sent to the Director, Office of Self-Governnance, U.S. Department of the Interior, Mail Stop 2548, 1849 C Street NW., Washington, DC 20240.

FOR FURTHER INFORMATION CONTACT: Dr. Kenneth D. Reinfield, U.S. Department of the Interior, Office of Self-Governance, 1849 C Street NW., Mail Stop 2548, Washington DC 20240, 202–219–0204.

SUMMARY INFORMATION: The tribal self-governance program is designed to promote self-determination by allowing tribes to assume more control through negotiated annual funding agreements of programs operated by the Department of the Interior. The Tribal Self-Governance Act of 1994 (Public Law 103–413) allows for negotaitions to be conducted for programs operated by BIA and for programs operated by other bureaus and offices within the Department that are otherwise available to Indians or when there is an historical, cultural, or geographic connection to an Indian tribe.

The purpose of this notice is to announce the availability of planning and negotiation grants in accordance with the self-governnance interim rule published in the Federal Register on April 23, 1996. The interior rules were established at 25 CFR 1001.7 to 1001.10

and will be used to govern the application and selection process for tribes/consortia to receive fiscal year 1997 negotiations and planning grants as specified in this notice. Applicants should be guided by the requirements in 25 CFR §§ 1001.7 to 1001.10 in preparing their applications. Copies of the interim rules published in the Federal Register on April 23, 1996, may be obtained from the information contact person identified in this notice.

Subject to the discretion of the Director, Office of Self-Governance, the following types of grants are avialable to tribes/consortia in 1997 with the deadlines as stated below:

(1) *Negotiation Grants:* Up to 10 grants of no more than $40,000 may be made available. As announced in today's Federal Register, the closing date for submitting completed applications to begin participation in tribal self-governance in fiscal year 1998 or calendar year 1998 is March 1, 1997. Applications requesting to be included in the applicant pool to begin participation in tribal self-governnance may be submitted at any time. Tribes/consortai selected from the applicant pool to begin participation in tribal self-governance in fiscal year 1998 or calendar year 1998, may be eligible to receive a negotiation grant. Each selected tribe/consortium will be notified by March 15, 1997, and must submit a written application for a negotiation grant, no later than March 31, 1997, indicating its intention to negotiate an annual funding agreement with any bureau within DOI for 1998.

(2) *Advance Planning Grants:* Up to five grants of no more than $50,000 may be made available. The closing date for submitting applications to receive a grant to plan for future participation in the tribal self-governance program is May 1, 1997. No later than June 1, 1997, each applicant will be notified by letter from the Director, Office of Self-Governance whether it has been selected to receive an advance planning grant.

(3) *Negotiation/Planning Grants to Negotiate Non-BIA Programs:* Up to 10 grants of no more than $40,000 may be made available. The closing date for submitting applications to receive a negotiation/planning grant for existing self-governance tribes to negotiate for DOI non-BIA programs is March 31, 1997. No later than May 1, 1997, each applicant will be notified by letter from the Director, Office of Self-Governance whether it has been selected to receive a negotiation/planning grant to negotiate non-BIA programs.

In order to provide sufficient time for tribes/consortia to effectively use the planning and negotiation grants, the following target dates have been established for the awarding of grants:

(1) *Negotiation Grants:* Since agreements for the 1997 fiscal year need to be signed and submitted by July 1, 1997, to allow sufficient time to prepare for negotiations, new participating tribes will be selected and awarded negotiation grants by May 1, 1997.

(2) *Advance Planning Grants:* In order to avoid delays in planning activity and future participation in tribal self-governance, advance planning grants will be awarded to tribes/consortia by July 1, 1997.

(3) *Negotiation/Planning Grants to Negotiate Non-BIA Programs:* Since agreements for the 1998 fiscal year need to be signed and submitted by July 1, 1997, to allow sufficient time to prepare for negotiation of DOI non-BIA programs, negotiation/planning grants for existing self-governance tribes to negotiate non-BIA program will be awarded by May 15, 1997.

Submitting Applications

(1) Application must be submitted in accordance with the interim rule published in the Federal Register on April 23, 1996, and by the deadlines identified in this announcement.

(2) Application may be mailed or hand-delivered.

(3) Applications which are mailed must be postmarked no later than the date given in this notice for the particular type of grant being applied for.

Dated: January 6, 1997.

William A. Sinclair,

Director, Office of Self-Governance.

[FR Doc. 97–560 Filed 1–9–97; 8:45 am]

BILLING CODE 4310–02–M

Notice of Deadline for Submitting Completed Applications To Begin Participation in the Tribal Self-Governance Program in Fiscal Year 1998 or Calendar Year 1998

AGENCY: Office of Self-Governance, Office of the Secretary, Interior.

ACTION: Notice of application deadline.

SUMMARY: In this notice, the Office of Self-Governance (OSG) establishes a March 1, 1997, deadline for tribes/consortia to submit completed applications to begin participation in the tribal self-governance program in fiscal year 1998 or calendar year 1998.

DATES: Completed application packages must be received by the Director, Office of Self-Governance by March 1, 1997.

ADDRESSES: Application packages for inclusion in the applicant pool should be sent to the Director, Office of Self-Governance, U.S. Department of the Interior, Mail Stop 2548, 1849 C Street NW, Washington DC 20240.

FOR FURTHER INFORMATION CONTACT: Dr. Kenneth D. Reinfeld, U.S. Department of the Interior, Office of Self-Governance, 1849 C Street NW, Mail Stop 2548, Washington, DC 20240, 202–219–0240.

SUPPLEMENTARY INFORMATION: Under the Tribal Self-Governance Act of 1994 (Public Law 103–413), as amended by the Fiscal Year 1997 Omnibus Appropriations Bill (Public Law 104–208) the Director, Office of Self-Governance may select up to 50 additional participating tribes/consortia per year for the tribal self-governance program, and negotiate and enter into annual written funding agreement with each participating tribe. The Act mandates that the Secretary submit copies of the funding agreements at least 90 days before the proposed effective date to the appropriate committees of the Congress and to each tribe that is served by the Bureau of Indian Affairs (BIA) agency that is serving the tribe that is a party to the funding agreement. Initial negotiations with a tribe/consortium located in an area and/or agency which has not previously been involved with self-governance negotiations, will take approximately two months from start to finish. Agreements for an October 1 to September 30 fiscal year need to be signed and submitted by July 1. Agreements for a January 1 to December 31 fiscal year need to be signed and submitted by October 1.

Background

On February 15, 1995, an interim rule was published in the Federal Register announcing the criteria for tribes to be included in an applicant pool and the establishment of the selection process for tribes/consortia to negotiate agreements pursuant to the Tribal Self-Governancet Act of 1994. This interim rule was added to Title 25 of the Code of Federal Regulations at Part 1001 of Chapter VI. While it may be changed by later rulemaking, the Act stipulates that the lack of promulgated regulations will not limit its effect. It should be noted that a proposed rulemaking has been negotiated between tribal and Federal members of a self-governance negotiated rulemaking committee and is currently in the process of being prepared for publication in the Federal Register for review and comment.

Purpose of Notice

The interim rules established at 25 CFR Parts 1001.1 to 1001.5 will be used

to govern the application and selection process for tribes/consortia to begin their participation in the tribal self-governance program in fiscal year 1998 and calendar year 1998. Applicants should be guided by the requirements in 25 CFR Parts 1001.1 to 1001.5 in preparing their applications. Copies of the interim rules published in the Federal Register on February 15, 1995, may be obtained from the information contact person identified in this notice.

Tribes/consortia wishing to be considered for participation in the tribal self-governance program in fiscal year 1998 or calendar year 1998 must respond to this notice, except for those which are (1) currently involved with negotiations with the Department; (2) one of the 62 tribal entities with signed agreements; or (3) one of the tribal entities already included in the applicant pool as of the date of this notice.

The Director's decision on the actual number of tribes that will enter negotiations will be made at a later date. Tribes already in the applicant pool will retain their existing ranking with tribes entering the applicant pool under these rules receiving a lower ranking. Being in the applicant pool will not guarantee that a tribe will actually be provided the opportunity to negotiate in any given year. However, it does mean that a tribe will not be passed over by a tribe with a lower ranking in the applicant pool or by a tribe not in the applicant pool, with the exception of a tribe already in the negotiation process.

For example, if the Department determines that five tribes will be afforded the opportunity to negotiate self-governance agreements for fiscal year 1998 and calendar year 1998, the five tribes with the highest rankings would be notified and negotiations would be scheduled. The tribe ranked sixth on the list would then have the highest ranking to negotiate a self-governance agreement for 1999 or might enter negotiations for 1998 if one of the first five tribes discontinued negotiations. In such a case, the tribe that discontinued negotiations would remain in the application pool with its original ranking and would be the first to be selected in 1998 for negotiating agreements commencing in 1999.

Dated: January 6, 1997.

William A. Sinclair,

Director, Office of Self-Governance.

[FR Doc. 97–561 Filed 1–9–97; 8:45 am]

BILLING CODE 4310–02–M

Fish and Wildlife Service

Notice of Receipt of Applications for Permit

The following applicants have applied for a permit to conduct certain activities with endangered species. This notice is provided pursuant to Section 10(c) of the Endangered Species Act of 1973, *as amended* (16 U.S.C. 1531, *et seq.*):

Applicant: Harold L. Ahlberg, Irving, TX, PRT–823758.

The applicant requests a permit to import a sport-hunted cheetah (*Acinonyx jubatus*) from Namibia for the purpose of enhancement of the survival of the species.

Applicant: Patricia L. Zerbini, Williston, FL, PRT–823609.

The applicant requests a permit to reexport one Asian elephant (*Elephas maximus*) born in captivity to accompany applicant to Circus Krone, Munchen, Germany for the purpose of enhancement of the survival of the species. The elephant is not being exported for exhibition purposes.

Applicant: McCarthy's Wildlife Center, Inc., West Palm Beach, FL, PRT–822008.

The applicant has requested a permit to import two male and two female captive-born cheetah (*Acinonyx jubatus*), from the De Wildt Cheetah Centre, South Africa, for the purpose of enhancement of the species through captive propagation and education.

Written data or comments should be submitted to the Director, U.S. Fish and Wildlife Service, Office of Management Authority, 4401 North Fairfax Drive, Room 430, Arlington, Virginia 22203 and must be received by the Director within 30 days of the date of this publication.

The public is invited to comment on the following application(s) for permits to conduct certain activities with marine mammals. The application(s) was/were submitted to satisfy requirements of the Marine Mammal Protection Act of 1972, *as amended* (16 U.S.C. 1361 *et seq.*) and the regulations governing marine mammals (50 CFR 18).

Applicant: Sea World, Inc., Orlando, FL, PRT–823561.

Type of Permit: Import for public display.

Name and Number of Animals: Polar Bear (*Ursus maritimus*), 1.

Summary of Activity to be Authorized: The applicant has requested a permit to import to Sea World of California for the purpose of public display one male captive-born polar bear for the purposes of public display.

Source of Marine Mammals for Public Display: Hagenbeck Zoo, Germany.

Period of Activity: Up to five years from issuance of a permit, if issued.

Applicant: Sea World, Inc., Orlando, FL, PRT–823560.

Type of Permit: Import for public display.

Name and Number of Animals: Polar Bear (*Ursus maritimus*), 1.

Summary of Activity to be Authorized: The applicant has requested a permit to import to Sea World of California one female captive-born polar bear for the purposes of public display.

Source of Marine Mammals for Public Display: Wuppertal Zoo, Germany.

Period of Activity: Up to five years from issuance of permit, if issued.

Concurrent with the publication of this notice in the Federal Register, the Office of Management Authority is forwarding copies of this application to the Marine Mammal Commission and the Committee of Scientific Advisors for their review.

Written data or comments, requests for copies of the complete application, or requests for a public hearing on this application should be sent to the U.S. Fish and Wildlife Service, Office of Management Authority, 4401 N. Fairfax Drive, Room 430, Arlington, Virginia 22203, telephone 703/358–2104 or fax 703/358–2281 and must be received within 30 days of the date of publication of this notice. Anyone requesting a hearing should give specific reasons why a hearing would be appropriate. The holding of such hearing is at the discretion of the Director.

Documents and other information submitted with these applications are available for review, *subject to the requirements of the Privacy Act and Freedom of Information Act,!* by any party who submits a written request for a copy of such documents within 30 days of the date of publication of this notice at the above address.

Dated: January 7, 1997.

Mary Ellen Amtower,

Acting Chief, Branch of Permits, Office of Management Authority.

[FR Doc. 97–652 Filed 1–9–97; 8:45 am]

BILLING CODE 4310–55–P

Bureau of Indian Affairs

Distribution of Fiscal Year 1997 Contract Support Funds

AGENCY: Bureau of Indian Affairs, Interior.

ACTION: Notice of method for distribution and use of Fiscal Year (FY) 1997 contract support funds (CSF).

SUMMARY: The purpose of this Announcement is to issue the Bureau of

Indian Affairs (BIA) administrative instructions for the implementation of Public Law (Pub. L.) 93–638 as amended by Pub. L. 103–413, the Indian Self-Determination Act Amendments of 1994 (the Act). These administrative instructions are designed to provide BIA personnel with assistance in carrying out their responsibilities when distributing CSF. These instructions are not regulations establishing program requirements.

DATES: The CSF Needs Report for ongoing/existing contracts and annual funding agreements are due on July 15, 1997. The CSF Needs Reports for new and expanded contracts and annual funding agreements are due periodically throughout the year as the need arises. All new and expanded contracts and annual funding agreements starting between October 1, 1996, and January 1, 1997, will be considered to have a January 1, 1997, start date.

ADDRESSES: Bureau of Indian Affairs, Division of Self-Determination Services, 1849 C Street, N.W., MS–4603–MIB, Washington, D.C. 20240.

FOR FURTHER INFORMATION CONTACT: Jim Thomas, Chief, Division of Self-Determination Services, (202) 208–5727.

SUPPLEMENTARY INFORMATION: A total of $95,829,000 is available for contract support requirements (excluding construction requirements) during FY 1997. Congressional language sets a ceiling on the amount of CSF available in FY 1997. Of this amount $90,829,000 is available for contract support requirements associated with FY 1997 costs of ongoing self-determination and self-governance awards for programs under contract prior to FY 1997. The balance of $5,000,000 is provided to continue the Indian Self-Determination (ISD) Fund to provide contract support for new and expanded contracts and annual funding agreements first entered into in FY 1997. Each BIA Area Office and the Office of Self-Governance (hereinafter office) has the responsibility for tribes located within their respective area to work with the tribes in identifying new and expanded contracts and annual funding agreements and reporting this information to the Division of Self-Determination Services as specified in this announcement. CSF shall be added to awards made under Sec. 102 and Title IV of the Indian Self-Determination and Education Assistance Act, as amended. Awards made under the authority of Sec. 103 of this Act shall not receive CSF to meet indirect costs, as contract support provisions do not apply to Sec. 103 grants.

Basis for Payment of CSF

BIA will utilize tribal indirect cost rates to determine the amount of CSF to be paid to eligible contracting tribes and tribal organizations and eligible self-governance tribes and tribal consortia. In determining legitimate indirect cost requirements each area and self-governance director should fund only those contracting or compacting tribal organizations that have an approved indirect cost rate for either FY 1995, 1996 or 1997 or indirect cost proposal currently under consideration by the Office of Inspector General. In those instances where a tribe or tribal organization has more than one approved rate or a current proposal under consideration by the Office of the Inspector General, the director should use the most current rate or pending proposal in determining the amount to award. For those tribes who are unable for good cause to negotiate an indirect cost rate, area contract officers may negotiate reasonable lump sum amounts with these tribes.

Ongoing/Existing Contracts/Annual Funding Agreements—Method of Distribution

Each area office will submit CSF need reports to the Central Office for ongoing contracts and annual funding agreements by July 15, 1997. A final distribution of contract support will be made on or about July 31, 1997. CSF will be provided to each office from the remaining available $90,829,000 based on these reports. If these reports indicate that $90,829,000 will not be sufficient to cover the entire need, this amount will be distributed pro rata, so that all contractors and compactors receive the same percentage of their reported need.

Should the amount provided for these existing contracts and annual funding agreements prove insufficient, a tribe or group of tribes may wish to reprogram funds to make up deficiencies necessary to recover full indirect costs. This tribal reprogramming authority is limited to funds for programs located in the Tribal Priority Allocation (TPA) portion of the tribal budget. Congressional language does not provide authority for the Bureau to reprogram funds from other Bureau programs to meet any CSF shortfalls.

For programs other than TPA, tribes are not constrained from recovering full indirect costs from within the overall program and contract support funds awarded for each program.

Each office will be suballotted 75 percent of the total amount which was provided in FY 1996, as soon as possible. Accordingly, each office should then award 75 percent of required contract support to each contract/compact meeting the criteria established below.

All contractors and self-governance tribes/consortia with either a FY 1995, 1996, or 1997 approved indirect cost rate, current indirect cost proposal, or FY 1997 approved lump sum amount are eligible for 75 percent of the appropriate total amount to be paid with the first allotment of CSF in FY 1997. After the second allotment of CSF is made (approximately July 31, 1997) all contractors and self-governance tribes/consortia should again receive their pro rata share of CSF, based on the amount provided at that time.

An ongoing/existing contract or annual funding agreement is defined as a BIA program operated by the tribal contractor on an ongoing basis which has been entered into prior to the current fiscal year. An increase or decrease in the level of funding from year to year for such contracts or annual funding agreements would not affect the designation of such contracts or annual funding agreements as being ongoing. An assumption of additional BIA program responsibilities would be required to trigger a change in designation.

Method of Distribution for New and Expanded Contracts/Annual Funding Agreements

Each office will submit CSF need reports to the Central Office for new and expanded contracts and annual funding agreements periodically throughout the year as new contracts or annual funding agreements are awarded or existing contracts or annual funding agreements are expanded. Funds will be provided to the offices as these reports are received and will be taken from the $5,000,000 ISD Fund. These funds will be distributed on a first-come-first-serve basis at 100 percent of need using the office reports.

In the event the $5,000,000 is depleted, new or expanded contracts or annual funding agreements awarded after this fund has been exhausted will not be provided any CSF during this fiscal year. Requests received after this fund has been exhausted will be considered first for funding in the following year, from funds appropriated for this purpose. It should be noted that there were a number of FY 1996 new and expanded contracts and annual funding agreements which were not funded during FY 1996, and, in line with the process outlined herein, they will be given priority for funding over

FY 1997 new and expanded contracts and annual funding agreements.

Priority of Funding for New and Expanded Contracts/Annual Funding Agreements

Contract support will be awarded from the ISD fund to all new and expanded contracts/annual funding agreements based on the start date of the award, and the application date, on a first-come-first-serve basis. An Indian Self-Determination Fund ''applicant roster'' shall be maintained, which shall list, in order of priority, the name of the tribe or tribal organization, the name of the program, the start date, the application date, the amount of program funds, the program cost code(s), the amount of contract support funds required, and the date of approved Indirect Cost Rate agreement or lump sum agreement.

''Start date'' means the date or commencement of operation of the new or expanded portion of the contract or annual funding agreement by the tribe/consortium or tribal organization. However, because the Self-Determination Act provides that contracts/annual funding agreements will be on a calendar year basis unless otherwise provided by the tribe, any start date on or prior to January 1 of each year shall be considered a January 1 start date.

''Application date'' shall be the date of the request by the tribe which includes: (1) a tribal resolution requesting a contract or annual funding agreement; (2) a summary of the program or portion thereof to be operated by the Tribe/consortium or Tribal organization; and (3) a summary identifying the source and amount of program or services funds to be contracted or included in an annual funding agreement and contract support requirements. In the event that two tribes or tribal organizations have the same start date and application date, then the next date for determination of priority shall be the date the fully complete application was received by the BIA.

If all of the above are equal, and if funds remaining in the ISD fund are not adequate to fill the entire amount of each award's contract support requirement, then each will be awarded a proportionate share of its requirement and shall remain on the Indian Self-Determination Fund Roster in appropriate order of priority for future distributions.

New contract/annual funding agreement is defined as the initial transfer of a program, previously operated by the BIA to the tribe/consortium or tribal organization.

An expanded contract/annual funding agreement is defined as a contract/annual funding agreement which has become enlarged, during the current fiscal year through the assumption of additional programs previously operated by the BIA.

Criteria for Determining CSF Need for New and Expanded Contracts/Annual Funding Agreements

CSF for new and expanded contracts/annual funding agreements will be determined using the following criteria:

1. All contracts/annual funding agreements initially entered into in FY 1997 that transfer the operation of a program that was operated by the BIA in the previous fiscal year to the tribe. (TPA programs started or expanded in FY 1997 that are a result of a change in priorities from other already contracted programs are not considered new or expanded.)

2. All expansions of existing contracts/annual funding agreements that call for the tribe to assume more or additional programs previously operated by the BIA.

3. New and expanded program assumptions under Self-Governance annual funding agreements.

Criteria for Determining CSF Need for Ongoing/Existing Contracts/Annual Funding Agreements

CSF for ongoing and existing contracts/annual funding agreements will be determined using the following criteria:

1. All TPA contracted programs or those programs included in annual funding agreements in FY 1996 and continued in FY 1997, including contracted or annual funding agreement programs moved to TPA in FY 1997, such as New Tribes, HIP, and Road Maintenance.

2. Direct program funding increases due to inflation adjustments and general budget increases.

3. TPA programs started or expanded in FY 1997 that are a result of a change in priorities from other already contracted/annual funding agreement programs.

4. CSF differentials associated with tribally-operated schools that receive indirect costs through the application of the administrative cost grant formula. These differentials are to be calculated in accordance with the criteria prescribed in the Choctaw decision dated September 18, 1992, issued by the Contracting Officer, Eastern Area Office. Copies of this decision can be obtained by calling the telephone number provided in this announcement. Tribes that received differential funding under this category in FY 1996 are eligible to receive funding from this account in FY 1997. Tribes that did not receive differential funding under this category in FY 1996 are eligible for funding from the ISD fund.

5. CSF will be distributed to the Office of Self-Governance for ongoing annual funding agreements, on the same basis as area offices. All additional CSF requirements will be met from the ISD fund in accordance with the criteria established above.

6. Funds available for Indian Child Welfare Act (ICWA) programs or reprogrammed from ICWA to other programs will be considered ongoing for the purposes of payment of contract support costs.

7. The use of CSF to pay prior year shortfalls is not authorized.

8. Programs funded from sources other than those listed above that were contracted in FY 1996 and are to be contracted in FY 1997 are considered as ongoing.

Dated: December 31, 1996.

Elizabeth L. Homer,

Assistant Secretary—Indian Affairs.

[FR Doc. 97–573 Filed 1–9–97; 8:45 am]

BILLING CODE 4310–02–P

Receipt of Petition for Reassumption of Jurisdiction From the Chevak Traditional Council of Chevak, Alaska

AGENCY: Bureau of Indian Affairs, Interior.

ACTION: Notice.

SUMMARY: This notice is published in exercise of authority delegated by the Secretary of the Interior to the Assistant Secretary—Indian Affairs by 209 DM 8.

The Indian Child Welfare Act of 1978 (Pub. L. 95–608) provide, subject to certain specified conditions, that Indian tribes may petition the Secretary of the Interior for reassumption of jurisdiction over Indian child custody proceedings.

In accordance with 25 CFR Part 13, this is notice that a petition has been received by the Secretary from the Chevak Traditional Council of Chevak, Alaska, for the tribal reassumption of jurisdiction over Indian child custody proceedings in the State of Alaska. The petition is under review and may be inspected or copied at the Bureau of Indian Affairs, Office of Tribal Services, 1849 C St., NW., room 4603 MIB, Washington, DC 20240.

Dated: December 26, 1996.

Elizabeth L. Homer,

Acting Assistant Secretary—Indian Affairs.

[FR Doc. 97–571 Filed 1–9–97; 8:45 am]

BILLING CODE 4310–02–M

Approval of Petition for Reassumption of Exclusive Jurisdiction by the Forest County Potawatomi Community of Crandon, Wisconsin, Over Indian Child Custody Proceedings Involving Indian Children Who Are Enrolled or Eligible for Enrollment With the Forest County Potawatomi Community, Crandon, Wisconsin and Who Reside or Are Domiciled Within the Exterior Boundaries of the Forest County Potawatomi Communities, in the State of Wisconsin, in the Counties of Forest, Oconto, and Marinette

AGENCY: Bureau of Indian Affairs, Interior.

ACTION: Notice.

SUMMARY: The Forest County Potawatomi Community of Crandon, Wisconsin, has filed a petition with the Department of the Interior to reassume exclusive jurisdiction over Indian child custody proceedings involving Indian children who are enrolled or eligible for enrollment with the Forest County Potawatomi Community, Crandon, Wisconsin and who reside or are domiciled within the exterior boundaries of the Forest County Potawatomi Communities, in the State of Wisconsin, in the Counties of Forest, Oconto, and Marinette.

The Assistant Secretary—Indian Affairs has reviewed the petition and determined that tribal exercise of jurisdiction is feasible and that the tribe has a suitable plan for exercising such jurisdiction. This notice constitutes the official approval of the the Forest County Potawatomi Community's petition by the Department of the Interior.

EFFECTIVE DATE: The Forest County Potawatomi Community, Crandon, Wisconsin, reassumes exclusive jurisdiction by March 11, 1997.

FOR FURTHER INFORMATION CONTACT: The principal author of this document is Betty Tippeconnie, Department of the Interior, Bureau of Indian Affairs, Office of Tribal Services, 1849 C St., N.W., Mail Stop 4603 MIB, Washington, D.C., 20240. (202) 208–2721.

SUPPLEMENTARY INFORMATION: The authority for the Assistant Secretary—Indian Affairs to publish this notice is contained in 25 CFR 13.14 and 209 DM 8. Section 108 of the Indian Child Welfare Act of 1978, Pub. L. 95–608, 92 Stat. 3074, 25 U.S.C. 1918, authorizes Indian tribes that occupy a reservation as defined in 25 U.S.C. 1903(10) over which a state asserts jurisdiction over Indian child custody proceedings, pursuant to Federal statute, to reassume jurisdiction over such proceedings.

To reassume such jurisdiction, a tribe must first file a petition in the manner prescribed in 25 CFR Part 13. Notice of receipt of this petition was published in the Federal Register, Vol. 60, No. 211, page 55588, on November 1, 1995. The petition is then reviewed by the Department of the Interior using criteria set out in 25 CFR 13.12. If the Department finds that the tribe has submitted a suitable plan and that tribal exercise of jurisdiction is feasible, the petition is approved by publication in the Federal Register.

The geographic areas subject to the reassumption of exclusive jurisdiction by the Forest County Potawatomi Community, Crandon, Wisconsin, are within the exterior boundaries of the Forest County Potawatomi Communities, in the State of Wisconsin, in the Counties of Forest, Oconto, and Marinette.

Dated: December 23, 1996.

Ada E. Deer,

Assistant Secretary—Indian Affairs.

[FR Doc. 97–572 Filed 1–9–97; 8:45 am]

BILLING CODE 4310–02–M

Minerals Management Service

Outer Continental Shelf, Alaska Region, Cook Inlet Oil and Gas Lease Sale 149

AGENCY: Minerals Management Service.

ACTION: Availability of Environmental Assessment (EA) and finding of no significant impact (FONSI) for a revision to the oil and gas lease sale proposal for Cook Inlet, sale 149.

SUMMARY: The Minerals Management Service (MMS) has prepared an EA for a revision to the Cook Inlet, Sale 149 proposal. The revised proposal reduces the area being considered for leasing. Based on the conclusions of the EA, the MMS has prepared a FONSI. A 45-day comment period on the revised proposal and EA will commence upon publication of this Notice in the Federal Register.

ADDRESSES: A copy of the EA and FONSI is available to the public upon request from the Regional Director, Minerals Management Service, Alaska Region, 949 East 36th Avenue, Anchorage, Alaska 99508–4302, Attention: Public Information. Copies can be requested by telephone, (907) 271–6070, or 1–800–764–2627. A copy can also be requested by fax at (907) 271–6805. Ask for the ''Cook Inlet EA.'' Address comments to the Regional Supervisor, Leasing and Environment at the address or fax number stated above.

SUPPLEMENTARY INFORMATION: A final Environmental Impact Statement (EIS) made available on January 30, 1996 (61 FR 3052) analyzed the Cook Inlet Sale 149 proposal as offering approximately 2 million acres. The revised proposal for Sale 149 would offer for lease approximately 430,000 acres north of Anchor Point in Cook Inlet. Based on the conclusions presented in the EA, a FONSI was prepared and a determination was made that a supplemental EIS is not needed.

Dated: January 7, 1997.

Carolita U. Kallaur,

Deputy Director, Minerals Management Service.

[FR Doc. 97–603 Filed 1–9–97; 8:45 am]

BILLING CODE 4310–MR–M

DEPARTMENT OF JUSTICE

Office of Justice Programs

Office of Juvenile Justice and Delinquency Prevention; Agency Information Collection Activities: Proposed Collection; Comment Request

AGENCY: Notice of Information Collection Under Review; Evaluation of the Comprehensive Community-Wide Approach to Gang Prevention, Intervention, and Suppression Program—''Aggregate Data forms: Police and School.''

The proposed information collection is published to obtain comments from the public and affected agencies. Comments are encouraged and will be accepted until March 11, 1997.

We request written comments and suggestions from the public and affected agencies concerning the proposed collection of information. Your comments should address one or more of the following four points:

(1) Evacuate whether the proposed collection of information is necessary for the proper performance of the functions of the agency, including whether the information will have practical utility;

(2) Evaluate the accuracy of the agencies estimates of the burden of the proposed collection of information, including the validity of the methodology and assumptions used;

(3) Enhance the quality, utility, and clarity of the information to be collected; and

(4) Minimize the burden of the collection of information on those who are to respond, including through the use of appropriate automated, electronic, mechanical, or other technological collection techniques or other forms of information technology, e.g., permitting electronic submission of responses.

Comments and/or suggestions regarding the item(s) contained in this notice, especially regarding the estimated public burden and associated response time should be directed to Marilyn Landon, Program Manager, Office of Juvenile Justice and Delinquency Prevention at (202) 307–0586. To receive a copy of the proposed information collection instrument with instructions, or additional information, please contact Marilyn Landon, 202–307–0586, Office of Juvenile Justice and Delinquency Prevention, Office of Justice Programs, U.S. Department of Justice, Room 782, 633 Indiana Avenue, NW, Washington, DC 20531. Additionally, comments may be submitted to the Department of Justice, (DOJ), Justice Management Division, Information Management and Security Staff, Attention: Department Clearance Officer, Suite 850, 1001 G Street, NW., Washington, DC 20530, or via facsimile to (202) 514–1534.

Overview of this information collection:

(1) *Type of Information Collection: New Collection.*

(2) *Title of the Form/Collection:* Evaluation of the Comprehensive Community-Wide Approach to Gang Prevention, Intervention, and Suppression Program ''Aggregate Data Forms: Police and School.''

(3) *Agency form number, if any, and the applicable component of the Department of Justice sponsoring the collection:* Form: None. Sponsored by the Office of Juvenile Justice and Delinquency Prevention, Office of Justice Program, United States Department of Justice.

(4) *Affected public who will be asked or required to respond, as well as a brief abstract:* Primary: Not-for-Profit Institutions. Other: State, Local, or Tribal Government. The study will obtain interview and test information on youth background, social adjustment, deviancy/crime activity, self-esteem, and depression/personality adjustment. It will determine the effectiveness of the program, comparing program subjects to non-program gang youth of the same ages, approximately 13 to 20 years old, and their backgrounds.

(5) *An estimate of the total number of respondents and the amount of time estimated for an average respondent to respond:* 31 (11 police + 20 school at 5 sites @ 11.88 hrs per respondent).

(6) *An estimate of the total public burden (in hours) associated with the collection:* 368.28 annual burden hours.

If additional information is required contact: Mr. Robert B. Briggs, Clearance Officer, United States Department of Justice, Information Management and Security Staff, Justice Management Division, Suite 850, Washington Center, 1001 G Street, NW., Washington, DC 20530.

Dated: January 6, 1997.

Robert B. Briggs,

Department Clearance Officer, United States Department of Justice.

[FR Doc. 97–567 Filed 1–9–97; 8:45 am]

BILLING CODE 4410–18–M

DEPARTMENT OF LABOR

Employment Standards Administration

Wage and Hour Division

Minimum Wages for Federal and Federally Assisted Construction; General Wage Determination Decisions

General wage determination decisions of the Secretary of Labor are issued in accordance with applicable law and are based on the information obtained by the Department of Labor from its study of local wage conditions and data made available from other sources. They specify the basic hourly wage rates and fringe benefits which are determined to be prevailing for the described classes of laborers and mechanics employed on construction projects of a similar character and in the localities specified therein.

The determinations in these decisions of prevailing rates and fringe benefits have been made in accordance with 29 CFR Part 1, by authority of the Secretary of Labor pursuant to the provisions of the Davis-Bacon Act of March 3, 1931, as amended (46 Stat. 1494, as amended, 40 U.S.C. 276a) and of other Federal statutes referred to in 29 CFR Part 1, Appendix, as well as such additional statutes as may from time to time be enacted containing provisions for the payment of wages determined to be prevailing by the Secretary of Labor in accordance with the Davis-Bacon Act. The prevailing rates and fringe benefits determined in these decisions shall, in accordance with the provisions of the foregoing statutes, constitute the minimum wages payable on Federal and federally assisted construction projects to laborers and mechanics of the specified classes engaged on contract work of the character and in the localities described therein.

Good cause is hereby found for not utilizing notice and public comment procedure thereon prior to the issuance of these determinations as prescribed in 5 U.S.C. 553 and not providing for delay in the effective date as prescribed in that section, because the necessity to issue current construction industry wage determinations frequently and in large volume causes procedures to be impractical and contrary to the public interest.

General wage determination decisions, and modifications supersedes decisions thereto, contain no expiration dates and are effective from their date of notice in the Federal Register, or on the date written notice is received by the agency, whichever is earlier. These decisions are to be used in accordance with the provisions of 29 CFR Parts 1 and 5. Accordingly, the applicable decision, together with any modifications issued, must be made a part of every contract for performance of the described work within the geographic area indicated as required by an applicable Federal prevailing wage law and 29 CFR Part 5. The wage rates and fringe benefits, notice of which is published herein, and which are contained in the Government Printing Office (GPO) document entitled ''General Wage Determinations Issued Under The Davis-Bacon And Related Acts,'' shall be the minimum paid by contractors and subcontractors to laborers and mechanics.

Any person, organization, or governmental agency having an interest in the rates determined as prevailing is encouraged to submit wage rate and fringe benefit information for consideration by the Department. Further information and self-explanatory forms for the purpose of submitting this data may be obtained by writing to the U.S. Department of Labor, Employment Standards Administration, Wage and Hour Division, Division of Wage Determinations, 200 Constitution Avenue, NW., Room S–3014, Washington, D.C. 20210.

Modifications to General Wage Determination Decisions

The number of decisions listed in the Government Printing Office document entitled ''General Wage Determinations Issued Under the Davis—Bacon and Related Acts'' being modified are listed by Volume and State. Dates of publication in the Federal Register are in parentheses following the decisions being modified.

Volume I

Connecticut
CT960001 (Mar. 15, 1996)
CT960003 (Mar. 15, 1996)
CT960004 (Mar. 15, 1996)

Volume II

Virginia
VA96005 (Mar. 15, 1996)
VA96014 (Mar. 15, 1996)
VA96018 (Mar. 15, 1996)
VA96022 (Mar. 15, 1996)
VA96023 (Mar. 15, 1996)
VA96031 (Mar. 15, 1996)
VA96033 (Mar. 15, 1996)
VA96036 (Mar. 15, 1996)
VA96054 (Mar. 15, 1996)
VA96065 (Mar. 15, 1996)
VA96067 (Mar. 15, 1996)
VA96085 (Mar. 15, 1996)
VA96087 (Mar. 15, 1996)
VA96088 (Mar. 15, 1996)
VA96108 (Mar. 15, 1996)

Volume III

Kentucky
KY960001 (Mar. 15, 1996)
KY960002 (Mar. 15, 1996)
KY960003 (Mar. 15, 1996)
KY960004 (Mar. 15, 1996)
KY960006 (Mar. 15, 1996)
KY960007 (Mar. 15, 1996)
KY960025 (Mar. 15, 1996)
KY960027 (Mar. 15, 1996)
KY960028 (Mar. 15, 1996)
KY960029 (Mar. 15, 1996)
KY960035 (Mar. 15, 1996)
South Carolina
SC960033 (Mar. 15, 1996)

Volume IV

Indiana
IN960001 (May 17, 1996)
IN960002 (Mar. 17, 1996)
IN960004 (Mar. 17, 1996)
IN960006 (Mar. 17, 1996)
IN960017 (Mar. 17, 1996)
IN960018 (Mar. 17, 1996)
Minnesota
MN960005 (Mar. 15, 1996)
MN960007 (Mar. 15, 1996)
MN960008 (Mar. 15, 1996)
MN960015 (Mar. 15, 1996)
MN960027 (Mar. 15, 1996)
MN960031 (Mar. 15, 1996)
MN960039 (Mar. 15, 1996)
MN960058 (Mar. 15, 1996)
MN960059 (Mar. 15, 1996)
MN960061 (Mar. 15, 1996)
Ohio
OH960001 (Mar. 15, 1996)
OH960002 (Mar. 15, 1996)
OH960003 (Mar. 15, 1996)
OH960028 (Mar. 15, 1996)
OH960029 (Mar. 15, 1996)
OH960034 (Mar. 15, 1996)
OH960035 (Mar. 15, 1996)
OH960036 (Mar. 15, 1996)
OH960038 (Mar. 15, 1996)

Volume V

Louisiana
LA960004 (Mar. 15, 1996)
LA960005 (Mar. 15, 1996)
LA960009 (Mar. 15, 1996)
LA960010 (Mar. 15, 1996)
LA960018 (Mar. 15, 1996)
Missouri
MO960001 (Mar. 15, 1996)
MO960002 (Mar. 15, 1996)
MO960003 (Mar. 15, 1996)
MO960007 (Mar. 15, 1996)
MO960009 (Mar. 15, 1996)
MO960010 (Mar. 15, 1996)
MO960011 (Mar. 15, 1996)
MO960016 (Mar. 15, 1996)
MO960017 (Mar. 15, 1996)
MO960019 (Mar. 15, 1996)
MO960043 (Mar. 15, 1996)
MO960048 (Mar. 15, 1996)
MO960049 (Mar. 15, 1996)
MO960050 (Mar. 15, 1996)
MO960051 (Mar. 15, 1996)
MO960054 (Mar. 15, 1996)
MO960055 (Mar. 15, 1996)
MO960057 (Mar. 15, 1996)
MO960059 (Mar. 15, 1996)
MO960062 (Mar. 15, 1996)
MO960063 (Mar. 15, 1996)
MO960064 (Mar. 15, 1996)
MO960065 (Mar. 15, 1996)
MO960070 (Mar. 15, 1996)
Nebraska
NE960001 (Mar. 15, 1996)
NE960003 (Mar. 15, 1996)
NE960059 (Mar. 15, 1996)
New Mexico
NM960001 (Mar. 15, 1996)

Volume VI

Arizona
AZ960002 (Mar. 15, 1996)
California
CA960043 (Mar. 15, 1996)
CA960048 (Mar. 15, 1996)
Colorado
CO960002 (Mar. 15, 1996)
CO960004 (Mar. 15, 1996)
CO960006 (Mar. 15, 1996)
CO960007 (Mar. 15, 1996)
CO960008 (Mar. 15, 1996)
CO960009 (Mar. 15, 1996)
CO960010 (Mar. 15, 1996)
CO960022 (Mar. 15, 1996)
CO960025 (Mar. 15, 1996)
South Dakota
SD960005 (Mar. 15, 1996)
SD960006 (Mar. 15, 1996)

General Wage Determination Publication

General wage determinations issued under the Davis-Bacon and related Acts, including those noted above, may be found in the Government Printing Office (GPO) document entitled ''General Wage Determinations Issued Under The Davis-Bacon and Related Acts''. This publication is available at each of the 50 Regional Government Depository Libraries and many of the 1,400 Government Depository Libraries across the country.

The general wage determinations issued under the Davis-Bacon and related Acts are available electronically by subscription to the FedWorld Bulletin Board System of the National Technical Information Service (NTIS) of the U.S. Department of Commerce at (703) 487–4630.

Hard-copy subscriptions may be purchased from: Superintendent of Documents, U.S. Government Printing Office, Washington, D.C. 20402, (202) 512–1800.

When ordering hard-copy subscription(s), be sure to specify the State(s) of interest, since subscriptions may be ordered for any or all of the six separate volumes, arranged by State. Subscriptions include an annual edition (issued in January or February) which includes all current general wage determinations for the States covered by each volume. Throughout the remainder of the year, regular weekly updates are distributed to subscribers.

Signed at Washington, D.C., this 3rd day of January 3, 1997.

Phillip J. Gloss,

Chief, Branch of Construction Wage Determinations.

[FR Doc. 97–366 Filed 1–9–97; 8:45 am]

BILLING CODE 4510–27–M

Bureau of Labor Statistics

Proposed Collection; Comment Request Consumer Price Index Revision Housing Survey; Correction

AGENCY: Bureau of Labor Statistics, Labor.

ACTION: Correction.

SUMMARY: In notice document 96–33025 beginning on page 68299 in the issue of Friday, December 27, 1996, make the following corrections:

On page 68299 in the second column, the notice stated that the Bureau of Labor Statistics is soliciting comments concerning the ''proposed revision of the 'Consumer Price Index Revision Housing Survey'.'' This should be corrected to read comments concerning the ''proposed new 'Consumer Price Index Revision Housing Survey'.'' On page 68300 in the first column, the title is listed as the ''Consumer Price Index Housing Survey''. This should be corrected to read the ''Consumer Price Index Revision Housing Survey''. Also on page 68300 in the first column, ''Total Respondents: 149,482'' should be corrected to read ''Total Responses: 149,482.''

Signed at Washington, D.C., this 6th day of January, 1997.

W. Stuart Rust, Jr.,

Acting Chief, Division of Management Systems, Bureau of Labor Statistics.

[FR Doc. 97–623 Filed 1–9–97; 8:45 am]

BILLING CODE 4510–24–M

NATIONAL AERONAUTICS AND SPACE ADMINISTRATION

[Notice: 96–145]

AGENCY: National Aeronautics and Space Administration (NASA)

ACTION: Notice of agency report forms under OMB review.

SUMMARY: The National Aeronautics and Space Administration, as part of its continuing effort to reduce paperwork and respondent burden, invites the general public and other Federal agencies to take this opportunity to comment on proposed and/or continuing information collections, as required by the Paperwork Reduction Act of 1995 (Public Law 104–13, 44 U.S.C. 3506(c)(2)(A)). The reports will be utilized by the Office of Small and Disadvantaged Business Utilization as a method for determining if developmental assistance provided to small disadvantaged businesses by prime contractor's performance meets the standards established in NASA policy. The Agency's ability to manage the program effectively would be greatly diminished without receiving the described reports, which are part of the ongoing performace fee evaluation process.

DATES: All comments should be submitted by March 20, 1997.

ADDRESSES: Written comments should be addressed to Richard Kall, Code HK, National Aeronautics and Space Administration, Washington, DC 20546–0001. All comments will become a matter of public record and will be summarized in NASA's request for Office of Management and Budget (OMB) approval.

FOR FURTHER INFORMATION CONTACT: Bessie B. Berry, NASA Reports Officer, (202) 358–1368.

Reports

Title: Small Business and Small Disadvantaged Business Concerns.

Type of review: Extension.

Need and Uses: For contracts over $500,000, uncompensated overtime information is used to evaluate offerors' proposals to determine (i) whether a contractor will be able to hire and retain qualified individuals, (ii) whether uncompensated overtime hours will be properly accounted, and (iii) the validity of the proposed uncompensated hours.

Affected Public: Business or other for-profit, Not-for-profit institutions, State, Local, or Tribal Government.

Number of Respondents: 657.

Responses Per Respondent: 1.

Annual Responses: 657.

Hours Per Request: 4.

Annual Burden Hours: 2,628.

Frequency of Report: As required.

Dated: December 19, 1996.

Russell S. Rice,

Director, IRM Division.

[FR Doc. 97–133 Filed 1–9–97; 8:45 am]

BILLING CODE 7510–01–M

[Notice 97–003]

NASA Advisory Council (NAC), Space Science Advisory Committee (SScAC), Sun-Earth Connection Advisory Subcommittee; Meeting

AGENCY: National Aeronautics and Space Administration.

ACTION: Notice of meeting.

SUMMARY: In accordance with the Federal Advisory Committee Act, Pub. L. 92–463, as amended, the National Aeronautics and Space Administration announces a meeting of the NASA Advisory Council, Space Science Advisory Committee, Sun-Earth Connection Advisory Subcommittee.

DATES: Monday, February 3, 1997, 8:30 a.m. to 5:00 p.m.; Tuesday, February 4, 1997, 8:30 a.m. to 5:00 p.m.; and Wednesday, February 5, 1997, 8:30 a.m. to 5:00 p.m.

ADDRESSES: National Aeronautics and Space Administration, MIC Room 7H46 300 E Street, SW., Washington, DC 20546.

FOR FURTHER INFORMATION CONTACT: George L. Withbroe, Code SA, National Aeronautics and Space Administration, Washington, DC 20546, (202) 358–2150.

SUPPLEMENTARY INFORMATION: The meeting will be open to the public up to the capacity of the room. The agenda for the meeting is as follows:

—Sun-Earth Connection Program Overview: Budget, Ongoing Program, Future Activities

—Program Reports for Magnetospheric Physics; Heliospheric Physics; Solar Physics; and Ionospheric-Thermospheric-Mesopheric Physics

—Strategic Planning Activities and Development of Sun-Earth-Heliosphere Roadmap

—Discussion and writing Groups

It is imperative that the meeting be held on these dates to accommodate the scheduling priorities of the key participants. Visitors will be requested to sign a visitor's register.

Dated: January 3, 1997.

Leslie M. Nolan,

Advisory Committee Management Officer, National Aeronautics and Space Administration.

[FR Doc. 97–532 Filed 1–9–97; 8:45 am]

BILLING CODE 7510–01–M

[Notice 97–002]

Aerospace Safety Advisory Panel; Meeting

AGENCY: National Aeronautics and Space Administration.

ACTION: Notice of meeting.

SUMMARY: In accordance with the Federal Advisory Committee Act, Pub. L. 92–463, as amended, the National Aeronautics and Space Administration announces a forthcoming meeting of the Aerospace Safety Advisory Panel.

DATES: February 6, 1997, 2 p.m. to 3:30 p.m.

ADDRESSES: National Aeronautics and Space Administration, 300 E Street, SW., Room 7H46 (MIC–7), Washington, DC 20546.

FOR FURTHER INFORMATION CONTACT: Mr. Norman B. Starkey, Code Q–1, National Aeronautics and Space Administration, Washington, DC 20546 (202/358–0914).

SUPPLEMENTARY INFORMATION: The Aerospace Safety Advisory Panel will present its annual report to the NASA Administrator. This is pursuant to carrying out its statutory duties for which the Panel reviews, identifies, evaluates, and advises on those program activities, systems, procedures, and management activities that can contribute to program risk. Priority is given to those programs that involve the safety of human flight. The major subjects covered will be the Space Shuttle, International Space Station, Computer Hardware/Software and Aeronautical Programs. The Aerospace Safety Advisory Panel is chaired by Paul M. Johnstone and is composed of 8 members and 6 consultants. The meeting will be open to the public up to the capacity of the room (approximately 60 persons including members and consultants of the Panel).

Type of Meeting: Open.

Agenda

Thursday, February 6

2:00 p.m.—Presentation of the findings and recommendations of the Aerospace Safety Advisory Panel

3:30 p.m.—Adjourn

All attendees will be requested to sign an attendance register.

Dated: January 3, 1997.

Leslie M. Nolan,

Advisory Committee Management Officer, National Aeronautics and Space Administration.

[FR Doc. 97–531 Filed 1–9–97; 8:45 am]

BILLING CODE 7510–01–M

NATIONAL ARCHIVES AND RECORDS ADMINISTRATION

Records Schedules; Availability and Request for Comments

AGENCY: National Archives and Records Administration, Office of Records Administration.

ACTION: Notice of availability of proposed records schedules; request for comments.

SUMMARY: The National Archives and Records Administration (NARA) publishes notice at least once monthly of certain Federal agency requests for records disposition authority (records schedules). Records schedules identify records of sufficient value to warrant preservation in the National Archives of the United States. Schedules also authorize agencies after a specified period to dispose of records lacking administrative, legal, research, or other value. Notice is published for records schedules that (1) Propose the destruction of records not previously authorized for disposal, or (2) reduce the retention period for records already authorized for disposal. NARA invites public comments on such schedules, as required by 44 U.S.C. 3303a(a).

DATES: Requests for copies must be received in writing on or before February 24, 1997. Once the appraisal of the records is completed, NARA will send a copy of the schedule. The requester will be given 30 days to submit comments.

ADDRESSES: Address requests for single copies of schedules identified in this notice to the Records Appraisal and Disposition Division (NIR), National Archives and Records Administration, College Park, MD 20740. Requesters must cite the control number assigned to each schedule when requesting a copy. The control number appears in the parentheses immediately after the name of the requesting agency.

SUPPLEMENTARY INFORMATION: Each year U.S. Government agencies create billions of records on paper, film, magnetic tape, and other media. In order to control this accumulation, agency records managers prepare records schedules specifying when the agency no longer needs the records and what happens to the records after this period. Some schedules are comprehensive and cover all the records of an agency or one of its major subdivisions. These comprehensive schedules provide for the eventual transfer to the National Archives of historically valuable records and authorize the disposal of all other records. Most schedules, however, cover records of only one office or program or a few series of records, and many are updates of previously approved schedules. Such schedules also may include records that are designated for permanent retention.

Destruction of records requires the approval of the Archivist of the United States. This approval is granted after a thorough study of the records that takes into account their administrative use by the agency of origin, the rights of the Government and of private persons directly affected by the Government's activities, and historical or other value.

This public notice identifies the Federal agencies and their subdivisions requesting disposition authority, includes the control number assigned to each schedule, and briefly describes the records proposed for disposal. The records schedule contains additional information about the records and their disposition. Further information about the disposition process will be furnished to each requester.

Schedules Pending

1. Department of the Air Force (N1–AFU–97–5). Immediate disposal of temporary fire protection records no longer being created because they are superseded by a DOD electronic recordkeeping system.

2. Department of Commerce, Patent and Trademark Office (N1–241–96–3). Revisions to the comprehensive schedule for the Office of the Assistant Commissioner for Patents.

3. Department of Labor, Employment Standards Administration (N1–155–96–1). Reduction in retention period for general correspondence files of the Wage and Hour Division.

4. Department of Treasury, Bureau of Public Debt (N1–53–97–2). One time reduction in retention period for U.S. Savings Bond records.

5. Small Business Administration, Disaster Assistance Loan Program Office (N1–309–96–1). Declined disaster declaration files.

Dated: January 3, 1997.

James W. Moore,

Assistant Archivist for Records Administration.

[FR Doc. 97–575 Filed 1–9–97; 8:45 am]

BILLING CODE 7515–01–M

NATIONAL INSTITUTE FOR LITERACY

Proposed Agency Information Collection Activities; Comment Request

AGENCY: National Institute for Literacy (NIFL).

ACTION: Notice.

SUMMARY: In compliance with the Paperwork Reduction Act (44 U.S.C. 3501 et seq.), this notice announces an Information Collection Request (ICR) by the NIFL. The ICR describes the nature of the information collection and its expected cost and burden.

DATES: Comments must be submitted by March 11, 1997.

FOR FURTHER INFORMATION CONTACT: Jaleh Behroozi Soroui at (202) 632–1506 or e-mail: JSoroui@nifl.gov

SUPPLEMENTARY INFORMATION:

Title

Application for technology award to provide funding to expand Literacy Information and Communication System (LINCS) activities, resources and services for the adult literacy community.

Abstract

The National Literacy Act of 1991 established the National Institute for Literacy and required that the NIFL conduct basic and applied research and demonstrations on literacy; collect and disseminate information to Federal, State and local entities with respect to literacy; and improve and expand the system for delivery of literacy services. This form will be used by organizations to apply for funding to expand LINCS regional hubs activities, resources, and services that will enhance technological capacity for electronic exchange across the literacy community. Evaluations to determine successful applicants will be made by a panel of literacy experts using the published criteria. The Institute will use this information to make a minimum of one cooperative agreement award for a period of up to 3 years.

Burden Statement: The burden for this collection of information is estimated at 55 hours per response. This estimate includes the time needed to review instructions, complete the form, and review the collection of information.

Respondents: Statewide Adult Basic Education and Literacy Organizations, Regions II, III and IV.

Estimated Number of Respondents: 15.

Estimated Number of Responses Per Respondent: 1.

Estimated Total Annual Burden on Respondents: 210 hours.

Frequency of Collection: One time. Send comments regarding the burden estimate or any other aspect of the information collection, including suggestions for reducing the burden to: Jaleh Behroozi Soroui, National Institute for Literacy, 800 Connecticut Ave., NW, Suite 200, Washington, DC 20006.

Request for Comments

NIFL solicits comments to:

(i) Evaluate whether the proposed collection of information is necessary for the proper performance of the functions of the agency, including whether the information will have practical utility.

(ii) Evaluate the accuracy of the agency's estimates of the burden of the proposed collection of information.

(iii) Enhance the quality, utility, and clarity of the information to be collected.

(iv) Minimize the burden of the collection of information on those who are to respond, including through the use of appropriate automated or electronic collection technologies of other forms of information technology, e.g., permitting electronic submission of responses.

Andrew J. Hartman,

Director, NIFL.

[FR Doc. 97–622 Filed 1–9–97; 8:45 am]

BILLING CODE 6055–01–M

NUCLEAR REGULATORY COMMISSION

[Docket Nos. 50–250 and 50–251]

Florida Power and Light Company; Notice of Consideration of Issuance of Amendment to Facility Operating License, Proposed No Significant Hazards Consideration Determination, and Opportunity for a Hearing

The U.S. Nuclear Regulatory Commission (the Commission) is considering issuance of an amendment to Facility Operating License Nos. DPR–31 and DPR–41 issued to Florida Power and Light Company (FPL or the licensee) for operation of the Turkey Point Nuclear Generating Station, Units 3 and 4, located in Dade County, Florida.

The proposed amendment would modify the Turkey Point Units 3 and 4 Technical Specifications (TS) to change the Reactor Coolant Pump (RCP) flywheel surveillance requirement. The proposed change will require RCP flywheel inspections once every ten years.

Before issuance of the proposed license amendment, the Commission will have made findings required by the Atomic Energy Act of 1954, as amended (the Act) and the Commission's regulations.

The Commission has made a proposed determination that the amendment request involves no significant hazards consideration. Under the Commission's regulations in 10 CFR 50.92, this means that operation of the facility in accordance with the proposed amendment would not (1) involve a significant increase in the probability or consequences of an accident previously evaluated; or (2) create the possibility of a new or different kind of accident from any accident previously evaluated; or (3) involve a significant reduction in a margin of safety. As required by 10 CFR 50.91(a), the licensee has provided its analysis of the issue of no significant hazards consideration, which is presented below:

(1) Operation of the facility in accordance with the proposed amendments would not involve a significant increase in the probability or consequences of an accident previously evaluated.

The proposed amendments do not involve a significant increase in the probability or consequences of an accident previously evaluated because:

The safety function of the RCP flywheels is to provide a coastdown period during which the RCPs would continue to provide reactor coolant flow to the reactor after loss of power to the RCPs. The maximum loading on the RCP motor flywheel results from overspeed following a large LOCA [loss-of-coolant accident]. The estimated maximum obtainable speed in the event of a LOCA was established conservatively. The proposed change does not affect that analysis. Reduced coastdown times due to a single failed flywheel is bounded by the locked rotor (instantaneous seizure) analysis, therefore, it would not place the plant in an unanalyzed condition. Therefore, these changes do not involve a significant increase in the probability or consequences of an accident previously evaluated.

(2) Operation of the facility in accordance with the proposed amendments would not create the possibility of a new or different kind of accident from any accident previously evaluated.

The use of the modified specifications can not create the possibility of a new or different kind of accident from any previously evaluated since the proposed amendments will not change the physical plant or the modes of plant operation defined in the facility operating license. No new failure mode is introduced due to the change in flywheel inspection frequency since the proposed changes do not involve the addition or modification of equipment, nor do they alter the design or operation of affected plant systems, structures, or components.

(3) Operation of the facility in accordance with the proposed amendments would not involve a significant reduction in a margin of safety.

The operating limits and functional capabilities of the affected systems, structures, and components are basically unchanged by the proposed amendments. The [Westinghouse Owners Group] WOG effort includes FPL Turkey Point Units 3 and 4 flywheels. FPL has performed 37 flywheel inspections with no indications affecting flywheel integrity. The margins of safety defined in RG [Regulatory Guide] 1.14, Revision 1 used in the analysis are not significantly changed. Detailed stress and fracture analyses as well as risk analysis have been completed with the results indicating that there would be no change in the probability of failure for RCP motor flywheels if all inspections were eliminated. Therefore these changes do not involve a significant reduction in the margin of safety.

The NRC staff has reviewed the licensee's analysis and, based on this review, it appears that the three standards of 10 CFR 50.92(c) are satisfied. Therefore, the NRC staff proposes to determine that the amendment request involves no significant hazards consideration.

The Commission is seeking public comments on this proposed determination. Any comments received within 30 days after the date of publication of this notice will be considered in making any final determination.

Normally, the Commission will not issue the amendment until the expiration of the 30-day notice period. However, should circumstances change during the notice period such that failure to act in a timely way would result, for example, in derating or shutdown of the facility, the Commission may issue the license amendment before the expiration of the 30-day notice period, provided that its final determination is that the amendment involves no significant hazards consideration. The final determination will consider all public and State comments received. Should the Commission take this action, it will publish in the Federal Register a notice of issuance and provide for opportunity for a hearing after issuance. The Commission expects that the need to take this action will occur very infrequently.

Written comments may be submitted by mail to the Chief, Rules Review and Directives Branch, Division of Freedom of Information and Publications Services, Office of Administration, U.S. Nuclear Regulatory Commission, Washington, DC 20555–0001, and should cite the publication date and page number of this Federal Register notice. Written comments may also be

delivered to Room 6D22, Two White Flint North, 11545 Rockville Pike, Rockville, Maryland, from 7:30 a.m. to 4:15 p.m. Federal workdays. Copies of written comments received may be examined at the NRC Public Document Room, the Gelman Building, 2120 L Street, NW., Washington, DC.

The filing of requests for hearing and petitions for leave to intervene is discussed below.

By February 10, 1997, the licensee may file a request for a hearing with respect to issuance of the amendment to the subject facility operating license and any person whose interest may be affected by this proceeding and who wishes to participate as a party in the proceeding must file a written request for a hearing and a petition for leave to intervene. Requests for a hearing and a petition for leave to intervene shall be filed in accordance with the Commission's ''Rules of Practice for Domestic Licensing Proceedings'' in 10 CFR Part 2. Interested persons should consult a current copy of 10 CFR 2.714 which is available at the Commission's Public Document Room, the Gelman Building, 2120 L Street, NW., Washington, DC, and at the local public document room located at the Florida International University, University Park, Miami, Florida 33199. If a request for a hearing or petition for leave to intervene is filed by the above date, the Commission or an Atomic Safety and Licensing Board, designated by the Commission or by the Chairman of the Atomic Safety and Licensing Board Panel, will rule on the request and/or petition; and the Secretary or the designated Atomic Safety and Licensing Board will issue a notice of hearing or an appropriate order.

As required by 10 CFR 2.714, a petition for leave to intervene shall set forth with particularity the interest of the petitioner in the proceeding, and how that interest may be affected by the results of the proceeding. The petition should specifically explain the reasons why intervention should be permitted with particular reference to the following factors: (1) The nature of the petitioner's right under the Act to be made party to the proceeding; (2) the nature and extent of the petitioner's property, financial, or other interest in the proceeding; and (3) the possible effect of any order which may be entered in the proceeding on the petitioner's interest. The petition should also identify the specific aspect(s) of the subject matter of the proceeding as to which petitioner wishes to intervene. Any person who has filed a petition for leave to intervene or who has been admitted as a party may amend the petition without requesting leave of the Board up to 15 days prior to the first prehearing conference scheduled in the proceeding, but such an amended petition must satisfy the specificity requirements described above.

Not later than 15 days prior to the first prehearing conference scheduled in the proceeding, a petitioner shall file a supplement to the petition to intervene which must include a list of the contentions which are sought to be litigated in the matter. Each contention must consist of a specific statement of the issue of law or fact to be raised or controverted. In addition, the petitioner shall provide a brief explanation of the bases of the contention and a concise statement of the alleged facts or expert opinion which support the contention and on which the petitioner intends to rely in proving the contention at the hearing. The petitioner must also provide references to those specific sources and documents of which the petitioner is aware and on which the petitioner intends to rely to establish those facts or expert opinion. Petitioner must provide sufficient information to show that a genuine dispute exists with the applicant on a material issue of law or fact. Contentions shall be limited to matters within the scope of the amendment under consideration. The contention must be one which, if proven, would entitle the petitioner to relief. A petitioner who fails to file such a supplement which satisfies these requirements with respect to at least one contention will not be permitted to participate as a party.

Those permitted to intervene become parties to the proceeding, subject to any limitations in the order granting leave to intervene, and have the opportunity to participate fully in the conduct of the hearing, including the opportunity to present evidence and cross-examine witnesses.

If a hearing is requested, the Commission will make a final determination on the issue of no significant hazards consideration. The final determination will serve to decide when the hearing is held.

If the final determination is that the amendment request involves no significant hazards consideration, the Commission may issue the amendment and make it immediately effective, notwithstanding the request for a hearing. Any hearing held would take place after issuance of the amendment.

If the final determination is that the amendment request involves a significant hazards consideration, any hearing held would take place before the issuance of any amendment.

A request for a hearing or a petition for leave to intervene must be filed with the Secretary of the Commission, U.S. Nuclear Regulatory Commission, Washington, DC 20555–0001, Attention: Docketing and Services Branch, or may be delivered to the Commission's Public Document Room, the Gelman Building, 2120 L Street, NW., Washington, DC, by the above date. Where petitions are filed during the last 10 days of the notice period, it is requested that the petitioner promptly so inform the Commission by a toll-free telephone call to Western Union at 1–(800) 248–5100 (in Missouri 1–(800) 342–6700). The Western Union operator should be given Datagram Identification Number N1023 and the following message addressed to Frederick J. Hebdon: petitioner's name and telephone number, date petition was mailed, plant name, and publication date and page number of this Federal Register notice. A copy of the petition should also be sent to the Office of the General Counsel, U.S. Nuclear Regulatory Commission, Washington, DC 20555–0001, and to J.R. Newman, Esquire, Morgan, Lewis & Bockius, 1800 M Street, NW., Washington, DC 20036, attorney for the licensee.

Nontimely filings of petitions for leave to intervene, amended petitions, supplemental petitions and/or requests for hearing will not be entertained absent a determination by the Commission, the presiding officer or the presiding Atomic Safety and Licensing Board that the petition and/or request should be granted based upon a balancing of the factors specified in 10 CFR 2.714(a)(1)(i)–(v) and 2.714(d).

For further details with respect to this action, see the application for amendment dated December 17, 1996, which is available for public inspection at the Commission's Public Document Room, the Gelman Building, 2120 L Street, NW., Washington, DC, and at the local public document room located at the Florida International University, University Park, Miami, Florida 33199.

Dated at Rockville, Maryland, this 6th day of January 1997.

For the Nuclear Regulatory Commission.

Richard P. Croteau,

Project Manager, Project Directorate II–3, Division of Reactor Projects-I/II.

[FR Doc. 97–591 Filed 1–9–97; 8:45 am]

BILLING CODE 7590–01–P

[Docket No. 50–482]

Wolf Creek Nuclear Operating Corporation; Notice of Withdrawal of Application for Amendment to Facility Operating License

The United States Nuclear Regulatory Commission (the Commission) has granted the request of Wolf Creek Nuclear Operating Corporation (the licensee) to withdraw its December 13, 1995, application for proposed amendment to Facility Operating License No. NPF–42 for the Wolf Creek Generating Station, located in Coffey County Kansas.

The proposed amendment would have revised Surveillance Requirement 4.1.3.1.3 to delete the requirement for performing the control rod drop surveillance test with T_{ave} greater than or equal to 551°F. This would have allowed performing the test with T_{ave} below 551°F. This change would have also added justification to the Bases for the performance of the rod drop test with T_{ave} below 551°F.

The Commission had previously issued a Notice of Consideration of Issuance of Amendment published in the Federal Register on January 22, 1996 (61 FR 1640). However, by letter dated December 12, 1996, the licensee withdrew the proposed change.

For further details with respect to this action, see the application for amendment dated December 13, 1995, and the licensee's letter dated December 12, 1996, which withdrew the application for license amendment. The above documents are available for public inspection at the Commission's Public Document Room, 2120 L Street, N.W., Washington, D.C., and the local public documents rooms located at Emporia State University, William Allen White Library, 1200 Commercial Street, Emporia, Kansas 66801 and Washburn University School of Law Library, Topeka, Kansas 66621.

Dated at Rockville, Maryland, this 6th day of January 1997.

For the Nuclear Regulatory Commission.

James C. Stone,

Senior Project Manager, Project Directorate IV–2, Division of Reactor Projects III/IV, Office of Nuclear Reactor Regulation.

[FR Doc. 97–592 Filed 1–9–97; 8:45 am]

BILLING CODE 7590–01–P

POSTAL RATE COMMISSION

Sunshine Act Meeting

NAME OF AGENCY: Postal Rate Commission.

TIME AND DATE: 10:00 a.m., February 3, 1997.

PLACE: Conference Room, 1333 H Street, NW., Suite 300, Washington, DC 20268.

STATUS: Closed.

MATTERS TO BE CONSIDERED: Issues in Docket No. MC96–3.

CONTACT PERSON FOR MORE INFORMATION: Margaret P. Crenshaw, Secretary, Postal Rate Commission, Suite 300, 1333 H Street, NW., Washington, DC 20268–0001, Telephone (202) 789–6840.

Cyril J. Pittack,

Acting Secretary.

[FR Doc. 97–769 Filed 1–8–97; 2:56 pm]

BILLING CODE 7710–FW–P–M

SECURITIES AND EXCHANGE COMMISSION

Request for Public Comment

Extension:

Rule 17a–8, SEC File No. 270–53, OMB Control No. 3235–0092

Upon Written Request, Copies Available From: Securities and Exchange Commission, Office of Filings and Information Services, Washington, DC 20549.

Notice is hereby given that pursuant to the Paperwork Reduction Act of 1995 (44 U.S.C. 3501 *et seq.*), the Securities and Exchange Commission (''Commission'') is publishing the following summary of collection for public comment.

Rule 17a–8 under the Securities Exchange Act of 1934 (the ''Act'') requires brokers and dealers to make and keep certain reports and records concerning their currency and monetary instrument transactions. The requirements allow the Commission to ensure that brokers and dealers are in compliance with the Currency and Foreign Transactions Reporting Act of 1970 (''Bank Secrecy Act'') and with the Department of Treasury regulations under that Act.

The reports and records required under this rule initially are required under Department of the Treasury regulations, and additional burden hours and costs are not imposed by this rule.

Written comments are invited on: (a) Whether the proposed collection of information is necessary for the property performance of the functions of the agency, including whether the information shall have practical utility; (b) the accuracy of the agency's estimate of the burden of the proposed collection of information; (c) ways to enhance the quality, utility, and clarity of the information to be collected; and (d) ways to minimize the burden of the collection of information on respondents, including through the use of automated collection techniques or other forms of information technology. Consideration will be given to comments and suggestions submitted in writing within 60 days of this publication.

Direct your written comments to Michael E. Bartell, Associate Executive Director, Office of Information Technology, Securities and Exchange Commission, 450 5th Street, N.W., Washington, DC 20549.

Dated: December 31, 1996.

Margaret H. McFarland,

Deputy Secretary.

[FR Doc. 97–616 Filed 1–9–97; 8:45 am]

BILLING CODE 8010–01–M

Submission for OMB Review; Comment Request

Extension:

Form 13F, SEC File No. 270–22, OMB Control No. 3235–0006

Rule 204–3, SEC File No. 270–42, OMB Control No. 3235–0047

Reinstatement:

Rule 6a–3, SEC File No. 270–15, OMB Control No. 3235–0021

Upon Written Request, Copies Available From: Securities and Exchange Commission, Office of Filings and Information Services, Washington, DC 20549.

Notice is hereby given that pursuant to the Paperwork Reduction Act of 1995 (44 U.S.C. 3501 et seq.), the Securities and Exchange Commission (''Commission'') has submitted to the Office of Management and Budget requests for approval of extension and reinstatement on previously approved collections of information.

Form 13F is used by certain large investment managers to report quarterly with respect to certain securities over which they exercise investment discretion. Each report takes about 24.6 hours to fill out.

It is estimated that approximately 1,804 institutional investment managers are subject to the rule. Each reporting manager files Form 13F quarterly. It is estimated that compliance with the Form 13F imposes a total annual burden per manager of approximately 98.4 hours. The total annual burden for all managers is estimated at 177,513.6 hours.

Rule 203–4 requires an investment adviser to deliver or offer to deliver to clients a written disclosure containing specified information concerning the background and business practices of

the adviser. Investors need this information to determine whether to retain or continue to employ the investment adviser.

There are 22,500 investment advisers subject to this rule. It is estimated that the burden resulting from the rule is 551,250 total annual hours.

Rule 6a–3 requires a registered or exempted exchange to file with the Commission (i) notification of any action that renders its application or annual amendment inaccurate, (ii) material it issues or makes available to members, and (iii) a monthly report concerning the activities on the exchange.

There are 8 registered exchanges and 1 exempted exchange that must comply with Rule 6a–3. Each of these 9 respondents file supplemental information under Rule 6a–3 approximately 25 times each year, for a total of 225 annual responses. Each response requires no more than one-half hour. Thus, the total compliance burden for registered and exempted exchanges per year is 112.5 hours.

General comments regarding the estimated burden hours should be directed to the Desk Officer for the Securities and Exchange Commission at the address below. Any comments concerning the accuracy of the estimated average burden hours for compliance with Commission rules and forms should be directed to Michael E. Bartell, Associate Executive Director, Office of Information Technology, Securities and Exchange Commission, 450 Fifth Street, N.W., Washington, D.C. 20549 and Desk Officer for the Securities and Exchange Commission, Office of Information and Regulatory Affairs, Office of Management and Budget, Room 3208, New Executive Office Building, Washington, D.C. 20503.

Dated: December 30, 1996.

Margaret H. McFarland,

Deputy Secretary.

[FR Doc. 97–617 Filed 1–9–97; 8:45 am]

BILLING CODE 8010–01–M

[Investment Company Act Release No. 22440; 811–4638]

The Arch Tax-Exempt Trust

January 3, 1997.

AGENCY: Securities and Exchange Commission (''SEC'').

ACTION: Notice of application for deregistration under the Investment Company Act of 1940 (the ''Act'').

APPLICANT: The Arch Tax-Exempt Trust.

RELEVANT ACT SECTION: Order requested under section 8(f) of the Act.

SUMMARY OF APPLICATION: Applicant requests an order declaring that if has ceased to be an investment company.

FILLING DATE: The application was filed on September 18, 1996 and amended on December 27, 1996.

HEARING OR NOTIFICATION OF HEARING: An order granting the application will be issued unless the SEC orders a hearing. Interested persons may request a hearing by writing to the SEC's Secretary and serving applicant with a copy of the request, personally or by mail. Hearing requests should be received by the SEC by 5:30 p.m. on January 28, 1997, and should be accompanied by proof of service on the applicant, in the form of an affidavit or, for lawyers, a certificate of service. Hearing requests should state that nature of the writer's interest, the reason for the request, and the issues contested. Persons may request notification of a hearing by writing to the SEC's Secretary.

ADDRESSES: Secretary, SEC, 450 Fifth Street, N.W., Washington, D.C. 20549. Applicant, 3435 Stelzer Road, Columbus, Ohio 43219–3035.

FOR FURTHER INFORMATION CONTACT: Kathleen L. Knisely, Staff Attorney, at (202) 942–0517, or Alison E. Baur, Branch Chief, at (202) 942–0564 (Division of Investment Management, Office of Investment Company Regulation).

SUPPLEMENTARY INFORMATION: The following is a summary of the application. The complete application may be obtained for a fee from the SEC's Public Reference Branch.

Applicant's Representations

1. Applicant is an open-end non-diversified management investment company organized as a Massachusetts business trust and consisting of four portfolios: Arch Tax-Exempt Money Market Portfolio, Arch Tax-Exempt Money Market Portfolio Class B,[1] Arch Missouri Tax-Exempt Bond Portfolio, and Arch Kansas Tax-Exempt Bond Portfolio.[2]

2. On April 16, 1986, applicant filed a Notification of Registration on Form N–8A pursuant to section 8(a) under the Act and a registration statement on Form N–1A under the Securities Act of 1933. The registration statement became effective on June 30, 1986 and the initial public offerings commenced thereafter.

3. On June 27, 1995, applicant's board of directors approved an Agreement and Plan of Reorganization (the ''Plan'') whereby applicant would exchange its net assets shares of The Arch Fund, Inc., a Maryland corporation registered under the Act as an open-end management investment company, in exchange for common shares of The Arch Fund, Inc. Pursuant to rule 17a–8 under the Act,[3] applicant's board of directors determined that the proposed reorganization was in the best interest of applicant and that the interests of the existing shareholders would not be diluted as a result of the proposed reorganization.

4. In approving the Plan, the directors considered the impact of the proposed reorganization on applicant's shareholders, including the elimination of duplicative professional and other costs, the potential for increased operational and administrative efficiencies, and the reduction of certain fixed costs on a per share basis.

5. On August 21, 1995, applicant filed definitive proxy materials with the SEC that were mailed to its shareholders on August 22, 1995. Applicant's shareholders approved the Plan at a special meeting held on September 26, 1995.

6. Pursuant to the Plan, on October 2, 1995, applicant transferred all of the assets and liabilities of The Tax-Exempt Money Market and The Missouri Tax-Exempt Bond Portfolio (the ''Transferor Portfolios'') to ''shell'' portfolios of The Arch Fund, Inc. (''New Portfolios'') in exchange for shares of the New Portfolios. Each shareholder of the Transferor Portfolios received a like number and type of full and fractional shares of the corresponding New Portfolio having an aggregate net asset value equal to the aggregate net asset value of such shareholder's interest in the respective Transferor Portfolio immediately prior to the reorganization. No brokerage commissions were paid in connection with the transfer.

7. Expenses incurred in connection with the reorganization totaled $38,569.88 and included legal expenses, filing fees, and proxy solicitation and shareholder meeting expenses. These expenses were assumed by the corresponding portfolios of The Arch

[1] The Arch Tax-Exempt Money Market Portfolio Class B was liquidated through redemeption of all publicly held Class B shares of beneficial interest during the period June 30 through July 13, 1989.

[2] The Arch Kansas Tax-Exempt Bond Portfolio never commenced operations and there was no public offering of its shares.

[3] Rule 17a–8 provides an exemption from section 17(a) of the Act for certain reorganizations among registered investment companies that may be affiliated persons, or affiliated persons of an affiliated person, solely by reason of having a common investment adviser, common directors, and/or common officers.

Fund, Inc. upon consummation of the reorganization.

8. As of the date of the application, applicant had no shareholders, securities, debts or other liabilities. Applicant is not a party to any litigation or administrative proceeding. Applicant is neither engaged, nor proposes to engage, in any business activities other than those necessary for the winding up of its affairs.

9. Applicant intends to file the necessary documentation with the Commonwealth of Massachusetts to effect its termination as a Massachusetts business trust.

For the Commission, by the Division of Investment Management, pursuant to delegated authority.

Margaret H. McFarland,

Deputy Secretary.

[FR Doc. 97–618 Filed 1–9–97; 8:45 am]

BILLING CODE 8010–01–M

[Release No. 34–38117; File No. SR–CSE–96–08]

Self-Regulatory Organizations; Cincinnati Stock Exchange; Order Granting Approval to Proposed Rule Change Relating to Continuous or Regular Quotation Obligations

January 3, 1997.

I. Introduction

On October 3, 1996, the Cincinnati Stock Exchange (''CSE'' or ''Exchange'') submitted to the Securities and Exchange Commission (''SEC'' or ''Commission''), pursuant to Section 19(b)(1) of the Securities Exchange Act of 1934 (''Act'') [1] and Rule 19b–4 thereunder,[2] a proposed rule change to issue a reiteration and clarification of its rules concerning dealer obligations to provide continuous or regular two-sided quotations.

The proposed rule change was published for comment in Securities Exchange Act Release No. 37811 (October 11, 1996), 61 FR 54472 (October 18, 1996). No comments were received on the proposal.

II. Description

The purpose of the proposed rule change is to clarify the obligations of CSE Designated Dealers, Qualified Dealers, and Contributing Dealers (collectively, ''CSE Dealers'') to provide continuous or regular two-sided quotations, as the case may be, during the trading day.[3] Currently, CSE Rules 11.8 and 11.9 set forth the requirements for CSE Dealers' quotations obligations. To clarify these requirements, the CSE is proposing to adopt a Regulatory Circular (''Circular''), which sets forth the obligations of a CSE Dealer to comply with CSE Rule 11.8 and 11.9 in providing quotes. Upon Commission approval of the Circular, the CSE will be disseminating the Circular to CSE Dealers and the requirements in the Circular will be fully enforceable as a rule of the Exchange. The Circular will provide guidance concerning quotation obligations at the opening and intra-day, during computer systems problems, and in unusual market conditions. In addition, the Circular will delineate enforcement standards for non-compliance with CSE rules pertaining to quotation obligations.

Specifically, the Circular will reiterate the obligations of a Designated Dealer or Qualified Dealer to display a two-sided quotation for a security immediately following the opening of the security on the primary market, and immediately to reestablish a quotation if that quotation is taken out during the day as a result of a transaction. The Exchange will thus reemphasize the need for Designated Dealers and Qualified Dealers to maintain continuous, two-sided quotations throughout the trading day.

Moreover, the Circular will specify the notification procedures to be followed in the event of a computer system problem that prevents a CSE Dealer from providing continuous or regular two-sided quotations. Frequent systems problems may result in the CSE Dealer's deregistration in certain issues by the Exchange's Market Performance Committee (''MPC''), or may be considered by the MPC as a factor in a request to become a dealer in additional securities. In addition, the Circular states that the existence of unusual market conditions will not exempt a CSE Dealer from its continuous or regular quotation obligations.

Finally, the Circular will place CSE members on notice that they will be informed of their compliance status at least quarterly, and will set forth possible sanctions resulting from non-compliance. In this regard, the Circular states that initial non-compliance may lead to a warning letter or a fine, while further non-compliance may lead to the imposition of sanctions, which may include a fine and deregistration in one or more issues. The Circular also states, however, that the MPC may impose sterner or swifter action, including sanctions, as it may find appropriate.

III. Discussion

The Commission finds that the proposed rule change is consistent with the requirements of the Act and the rules and regulations thereunder applicable to a national securities exchange, and, in particular, with the requirements of Section 6(b).[4] In particular, the Commission believes the proposal is consistent with the Section 6(b)(5) requirements that the rules of an exchange be designed to promote just and equitable principles of trade, to prevent fraudulent and manipulative acts, and, in general, to protect investors and the public.

The Commission finds that the Circular sets forth an adequate reiteration of CSE Dealers' existing obligations under Exchange rules to provide continuous or regular two-sided quotations, as the case may be,[5] during Exchange trading hours. As was noted above, the Circular states that a Designated Dealer or Qualified Dealer shall immediately display a two-sided quotation as soon as the security opens on the primary market and that the dealer must immediately reestablish a bid or offer if its quote has been taken out as the result of a transaction.

In addition, the Commission believes that the Circular will provide CSE Dealers with appropriate clarification as to their continuous or regular quotation obligations under Exchange rules during the occurrence of unusual market conditions and in the event of systems problems at the Exchange or a member firm. The Circular clearly states that a CSE Dealer is not exempted from its obligation to provide continuous or regular two-sided quotations during the occurrence of unusual market conditions. Moreover, the Circular references the procedures, adopted in a

---

[1] 15 U.S.C. 78s(b)(1).

[2] 17 CFR 240.19b–4.

[3] The term ''Designated Dealer'' is defined by the Exchange as a member who maintains a minimum net capital amount and who has been approved by the CSE's Securities Committee to perform market making functions by entering bids and offers into the Exchange's trading systems. *See* CSE Rule 11.9(a)(3). During Exchange trading hours, a Designated Dealer is required to provide continuous bids and offers for round lots of issues for which the member is registered as a Designated Dealer. *See* CSE Rule 11.9(c)(iii).

A ''Contributing Dealer'' is defined as a member who maintains a minimum net capital amount and during Exchange trading hours provides regular bids and offers for round lots of issues for which the member is registered. *See* CSE Rule 11.9(a)(4). Currently, no CSE member is registered with the Exchange as a Contributing Dealer. Telephone Conversation between Adam Gurwitz, Director of Legal Affairs, CSE, and Jon Kroeper, Attorney, SEC, dated January 2, 1997.

A ''Qualified Dealer'' is defined as a member who has been approved by the CSE's Securities Committee to provide to all members during Exchange trading hours a continuous two-sided market in odd-lots of issues for which the member is designated a Qualified Dealer. *See* CSE Rule 11.8.

[4] 15 U.S.C. 78f(b).

[5] *See supra* note 3.

previous Regulatory Circular,[6] that are to be followed in the event that systems problems at a member firm or the Exchange temporarily prevent a CSE Dealer from providing continuous or regular quotations.

Furthermore, the Commission believes that the Circular is consistent with Section 6(b)(1) of the Act[7] in that it provides a means of notifying CSE Dealers of their compliance with the Exchange's rules regarding quotation obligations and delineates enforcement standards that will be applied by the Exchange as a result of member non-compliance with such obligations. The Circular states that members will be notified of their compliance status at least quarterly. In the event of non-compliance, the Circular provides that initial non-compliance may lead to a warning letter or a fine, while further non-compliance may lead to the imposition of sanctions, which may include a fine and deregistration in one or more issues. The Circular also states, however, that the MPC may impose sterner or swifter action, including sanctions, as it may find appropriate. The Commission would particularly expect the CSE to impose sterner sanctions for egregious or continued violations. Accordingly, given the flexibility inherent in the Circular's enforcement standards, the Commission believes that such standards should provide the Exchange with an appropriate framework to address instances of CSE Dealer non-compliance with the Exchange's rules regarding quotation obligations.

IV. Conclusion

It is therefore ordered, pursuant to Section 19(b)(2) of the Act,[8] that the proposed rule change (SR–CSE–96–08) is approved.

For the Commission, by the Division of Market Regulation, pursuant to delegated authority.[9]

Margaret H. McFarland,

Deputy Secretary.

[FR Doc. 97–619 Filed 1–9–97; 8:45 am]

BILLING CODE 8010–01–M

[6] *See* CSE Regulatory Circular 96–07.

[7] 15 U.S.C. 78f(b)(1).

[8] 15 U.S.C. 78s(b)(2).

[9] 17 CFR 200.30–3(a)(12).

SOCIAL SECURITY ADMINISTRATION

Statement of Organization, Functions and Delegations of Authority

This statement amends part S of the Statement of the Organization, Functions and Delegations of Authority which covers the Social Security Administration (SSA). Chapter S4 covers the Deputy Commissioner for Systems. Notice is given that Subchapter S4L, the Office of Telecommunications (OTC), is being deleted. Subchapter S4E, the Office of Systems Operations (OSO), is being retitled to the Office of Telecommunications and Systems Operations (OTSO), and amended to reflect the transfer of functions from OTC to OSO. The changes are as follows:

Section S4.10 *The Office of the Deputy Commissioner, Systems*—(Organization):

Delete:

I. The Office of Telecommunications (S4L).

Retitle:

D. ''The Office of Systems Operations'' (S4E) to ''The Office of Telecommunications and Systems Operations'' (S4E).

Section S4.20 *The Office of the Deputy Commissioner, Systems*—(Functions):

Delete in its entirety:

I. The Office of Telecommunications (S4L).

Retitle:

D. ''The Office of Systems Operations'' (S4E) to ''The Office of Telecommunications and Systems Operations'' (S4E).

Amend to read as follows:

D. The Office of Telecommunications and Systems Operations (OTSO) (S4E) directs, manages and coordinates the planning, acquisition, implementation, security, operation and maintenance of SSA's computer systems operations, and plans, implements and evaluates SSA's communications technology and systems. It directs and coordinates the transition, implementation and operation of current/ongoing operating systems support software, including diagnostic software. It is responsible for evaluating current and emerging communications technologies and for designing, acquiring, implementing, operating and maintaining new integrated telecommunications systems combining voice, data, video, facsimile and other SSA communications requirements. OTSO directs, manages and coordinates the planning, analysis, design, acquisition, implementation, operation and maintenance of SSA's existing telecommunications systems. It manages the telecommunications operations complexes located at the Central Office, Regional Offices and field sites. It is responsible for SSA's comprehensive voice communication management program. OTSO interfaces with other systems components in the transition and implementation of redesigned programmatic and administrative systems to progressively replace existing application systems. It manages the computer operations complex which processes SSA's programmatic support, administrative, management information and statistical application systems. OTSO conducts continuing assessments and engineering analyses of the computer operations, as well as equipment performance analyses and coordinates the implementation of necessary improvements to existing resources. It directs and coordinates the activities associated with the planning, management, acquisition, procurement and renewal of ADP equipment, software and technical services for SSA to maintain operational systems and to prevent progressive deterioration. OTSO develops, controls and implements operational plans which include the preparing of technical specifications, evaluation criteria, acceptance test criteria, facilities engineering plans and budget estimates to maintain operational systems. It advises the Deputy Commissioner, SSA Executive Staff and external monitoring authorities such as the General Services Administration, the General Accounting Office, the Office of Management and Budget and Congress on SSA's computer systems operations.

Delete: Existing Subchapter S4L, the Office of Telecommunications.

Retitle: Existing Subchapter S4E, ''The Office of Systems Operations'' (S4E) to ''The Office of Telecommunications and Systems Operations'' (S4E).

Change all references to the ''Office of Systems Operations'' to the ''Office of Telecommunications and Systems Operations'' and all references to ''OSO'' to ''OTSO'' throughout all Subchapters of Chapter 4.

Section S4E.00 *The Office of Telecommunications and Systems Operations*—(Mission):

Amend to read as follows:

The Office of Telecommunications and Systems Operations (OTSO) (S4E) directs, manages and coordinates the planning, acquisition, implementation, security, operation and maintenance of SSA's computer systems operations and the telecommunications systems. It directs and coordinates the transition, implementation and operation of current/ongoing operating systems support software, including diagnostic software. It is responsible for evaluating current and emerging communications technologies and for designing, acquiring, implementing, operating and maintaining new integrated telecommunications systems combining

voice, data, video, facsimile, and other SSA communications requirements. OTSO designs and implements the critical interface between telecommunications facilities and teleprocessing complexes. OTSO manages the telecommunications operations complexes located at the Central Office, Regional Offices and field sites. It is responsible for SSA's comprehensive voice communication management program. OTSO manages the implementation of production application software at all network platforms and interfaces other systems components in the transition and implementation of redesigned programmatic, and administrative systems to progressively replace existing application systems. OTSO administers all activities pertaining to configuration management, change management and problem management with respect to ongoing and telecommunications operations. It manages the computer operations complex which processes SSA's programmatic support, administrative, management information and statistical application systems. OTSO conducts continuing assessments and engineering analyses of the computer operations, as well as equipment performance analyses and coordinates the implementation of necessary improvements to existing resources. It directs and coordinates the activities associated with the planning, management, acquisition, procurement and renewal of all ADP equipment, software and technical services for SSA to maintain operational and telecommunications systems and to prevent progressive deterioration. OTSO develops, controls and implements operational plans which include the preparing of technical specifications, evaluation criteria, acceptance test criteria, facilities engineering plans and budget estimates to maintain operational and telecommunications systems. It advises the Deputy Commissioner, SSA Executive Staff and external monitoring authorities such as the General Services Administration, the General Accounting Office, the Office of Management and Budget and Congress on SSA's computer systems operations.

Section S4E.10 *The Office of Telecommunications and Systems Operations*—(Organization):

C. The Immediate Office of the Associate Commissioner for Telecommunications and Systems Operations (S4E), which includes:

Establish:

1. The Distributed Data Processing Management Staff (S4E–1).

Retitle:

H. ''The Division of Standards and Control'' (S4EK) to ''The Division of Telecommunications Security and Standards'' (S4EK).

I. ''The Division of Operational Resource Management'' (S4EL) to ''The Division of Resource Management and Acquisition'' (S4EL).

K. ''The Division of Teleprocessing Systems Operations'' (S4EN) to ''The Division of Telecommunications Systems'' (S4EN).

Establish:

L. The Division of Integrated Telecommunications Management (S4EP).

M. The Division of National Network Services and Operations (S4EQ).

N. The Division of Network Engineering (S4ER).

Section S4E.20 *The Office of Telecommunications and Systems Operations*—(Functions):

C. The Immediate Office of the Associate Commissioner for Telecommunications and Systems Operations (S4E) provides the Associate Commissioner and Deputy Associate Commissioner with staff assistance on the full range of their responsibilities.

Establish:

1. Distributed Data Processing Management Staff (S4E–1).

a. Directs the plans and activities to implement distributed data processing systems across SSA.

b. Initiates major program, subprogram, project and task activities in support of the implementation of Distributed Data Processing Management Staff (DDPMS) plans outlined in the Integrated Systems Plan and the Agency Strategic Plan.

c. Oversees/coordinates all DDPMS implementation activity among all systems components including the incorporation of office automation, programmatic systems, existing distributed-type systems, stand-alone personal computer-based systems, pilot systems and user-developed systems into a unified distributed processing environment.

d. Develops and manages the DDPMS procurement plan, outlining all acquisitions related to the project. Manages the development of distributed data processing acquisitions in the Intelligent Workstation/Local Area Network (IWS/LAN) areas.

e. Develops and manages the delivery, implementation and acceptance plans for DDPMS acquisitions.

f. Manages the evaluation process for all technology substitutions, technology refreshments, upgrades and unsolicited proposals for DDPMS. Manages the administration of DDPMS contracts to include amendments, cancellations and renewals.

g. Establishes and maintains the coordination and liaison interfaces to all other systems components, all SSA central office and field components and external committees, conferences and organizations involved in and affected by DDPMS.

h. Approves technical specifications, technical evaluation criteria, technology substitution specifications for DDPMS-related workstation, network and application acquisitions.

i. Directs project activities to ensure that SSA-level DDPMS initiatives maintain compatibility with Governmentwide Information Technology Systems (ITS) standards.

G. The Division of Operational Capacity Performance Management (S4EJ).

Add:

6. Responsible for analysis of configuration, topology, connectivity, automation and availability of SSA's national network in support of performance management, resource utilization and capacity planning.

7. Performs network modeling and analysis of new applications and designs to determine network performance impacts. Projects future capacity requirements for network components and continually monitors performance to validate projections.

Retitle:

H. The ''Division of Standards and Control'' (S4EK) to ''Division of Telecommunications Security and Standards'' (S4EK).

Amend to read as follows:

7. Manages a centralized inventory of all SSA ITS and telecommunications equipment, and manages the ITS excess equipment process.

Delete ''8'' in its entirety.

Retitle:

I. The ''Division of Operational Resource Management'' (S4EL) to ''Division of Resource Management and Acquisition'' (S4EL)

Amend to read as follows:

1. Directs OTSO's participation in the Information Technology Systems (ITS) procurement process. Manages, plans and coordinates the activities relating to business and financial planning of SSA's telecommunications needs.

2. Performs technical and cost reviews of all OTSO/ITS procurements. Performs technical review of procurement proposals for ITS resources, network hardware, software and related services.

11. Develops short-term and long-range tactical planning and maintains the OTSO macroprocurement plan which relates to planned acquisitions of ITS and telecommunications equipment, software, system design and

system support services and implementation of telecommunication expansion.

Delete ''8'' in its entirety.

Renumber:

''9'' through ''13'' to read ''8'' through ''12''.

J. The Division of Integration and Environmental Testing (S4EM).

Add:

12. Supports operating system and connectivity software on the LANs and IWS. It researches and tests current off-the-shelf products for their network configuration to LAN and workstation needs.

13. Performs systems analysis, configuration design, software selection, implementation and procurement support for micro-computers, minicomputers and computer graphics systems and equipment for various components of OTSO. Provides state-of-the-art technical expertise including the evaluation of new and existing systems activities and provides support for enhancements, modifications, design and/or redesign. It researches and tests current off-the-shelf products for their network configuration to LAN and workstation needs. Researches and analyzes emerging office systems developments to ensure technology awareness and provide supporting systems development, design and planning implementation.

14. Manages the OTSO technical training program. Assesses needs, and formulates and executes strategies to upgrade individual knowledge and skills levels.

Retitle:

K. The ''Division of Teleprocessing Systems Operations'' (S4EN) to ''Division of Telecommunications Systems'' (S4EN).

Delete ''4'', and ''7'' in their entirety.

Renumber ''5'' to ''4'', and ''6'' to ''5''.

Establish:

L. The Division of Integrated Telecommunications Management (S4EP).

1. Plans and manages the strategic and tactical direction of the SSA voice communications and voice-data integration programs.

2. Provides technical and analytical support for the National 800 Number and other communications initiatives and programs.

3. Provides and manages voice communications systems hardware, software, services and ancillary equipment for SSA nationwide.

4. Directs the acquisition, operations, maintenance, retention and disposal of voice communications systems and services SSA-wide. Develops and administers voice communications ITS contracts.

5. Administers Federal Telecommunication System (FTS) 2000 services SSA-wide and supports OTSO in representing SSA in all related negotiations within SSA and with GSA and FTS vendors and carriers.

6. Directs the evaluation, acquisition, installation, operation and disposal of voice communications systems and services for SSA nationwide.

7. Serves as the SSA focal point for voice communications capacity planning.

8. Manages SSA-wide programs for imaging, video, facsimile, satellite, radio and emergency communications.

9. Manages SSA headquarters voice communications systems.

10. Serves as SSA-level liaison with Federal, State and other government and private-sector entities on voice communications and voice-data integration.

11. Manages within SSA the development and application of emerging voice communications technology.

12. Manages technical solutions for ''800'' and other toll-free services SSA-wide.

13. Manages the acquisition of data circuits.

Establish:

M. The Division of National Network Services and Operations (S4EQ).

1. Manages the installation, relocation and operation of SSA's telecommunications network facilities for the transmission of program and management data over SSA established networks.

2. Monitors telecommunications operations, analyzes equipment problems and effects proper maintenance and repair.

3. Develops and directs the implementation of new procedures and updates existing procedures for network node operations.

4. Reports outages to vendor management for prompt resolution and is responsible for the repair of advanced communications electronics equipment.

5. Provides emergency support services for equipment reconfiguration as well as repair, assembly/disassembly and installation of advanced telecommunications electronics.

6. Serves as the initial point of contact for user and technical problem determination for telecommunications. Diagnoses data-center hardware and network problems and coordinates network operations issues with applications and systems support staff.

7. Monitors and controls functions for the nationwide telecommunications system. Develops operational procedures to modernize and streamline network operation and develops plans for automation.

8. Manages traffic flow between telecommunications complexes and other SSA complexes.

9. Communicates status of the network to other network nodes and advises users of abnormal or extraordinary situations affecting network operations.

10. Monitors voice communications operations, analyzes equipment problems and effects proper maintenance and repair.

11. Directs all teleprocessing system software problem determination and resolution.

12. Coordinates with other OSO components in addressing teleprocessing software concerns regarding system capacity issues and system configuration proposals.

13. Operates and maintains an integrated systems and technical coordination control center and help desk to coordinate problem identification and resolution activities.

Establish:

N. The Division of Network Engineering (S4ER).

1. Directs the design, development, implementation, maintenance and support of specialized data communications software (i.e., Email and Internet) to support SSA's international network (SSANet).

2. Researches network prototypes and performs testing of new network technologies and implements and monitors network standards.

3. Supports SSA components as well as other Government agencies to provide optimum network interface design, management capabilities, connectivity, availability and response time.

4. Integrates and validates new network hardware such as assistive devices, software products, versions and maintenance levels into SSANet and SSANet connectivity management.

5. Manages and coordinates all change management system control relating to network hardware and software changes to SSANet under the auspices of the change management facility.

6. Performs Level 3 network monitoring and problem determination for the SSANet.

7. Develops and implements a network backup recovery.

8. Performs network software planning, installation and management at all remote sites.

9. Serves as the SSA-level liaison with Federal, State, and local Government agencies and with the private sector to integrate them into the SSA network.

10. Responsible for SSANet software distribution and version management.

11. Interfaces with SSANet users to determine the impact of new applications and workloads and supports user liaison and systems development activities of other SSA components in the resolution of network technical and operational problems.

12. Manages communications software changes to ensure compatibility with hardware modifications at Central Office and all remote network platform locations.

13. Directs the planning, analysis and design of specialized network software systems for providing information relevant to the development of existing and proposed data communications systems.

14. Responsible for all aspects of engineering, design, configuration, implementation and support of LAN Operating System (OS) software, telecommunications and connectivity service functions at SSA.

15. Responsible for telecommunications and connectivity projects, including acquisition, implementation, integration and control.

16. Develops, disseminates and enforces standards and policies relating to workstations, workstation configurations, peripherals, LANs, LAN OS, local bridges and routers and related customer support and service.

17. Works with SSA users to provide solutions to LAN telecommunications needs that are consistent with SSA-network architecture policies; determines network and interfacing hardware needs, implementing solutions, planning and expansion; and determines staff hardware training needs. It assists SSA telecommunications users in determining and refining services and support requirements, configuration and engineering solutions, planning for future needs, coordinating implementation and evaluating effectiveness.

18. Provides a full range of initial and followup telecommunications and connectivity services and support for SSA users in network requirements analysis, system design, LAN needs determination, engineering, implementation, network control, OS software support and training.

19. Develops and distributes research papers on applied technology and its relationship to existing and future telecommunications and connectivity requirements. It also develops alternate systems configurations to meet specific alternative requirements (non-traditional technology approaches).

20. Solves network problems by applying information on state-of-the-art OS, telecommunications and connectivity software and hardware currently available in the marketplace. It develops turn-key telecommunications systems and special menus to meet unusual customer requirements.

21. Responsible for all aspects of network design, network engineering, network connectivity, development and customization of network management processes/tools, network automation processes and network performance.

Dated: November 15, 1996.

Shirley S. Chater,

Commissioner of Social Security.

[FR Doc. 97–583 Filed 1–9–97; 8:45 am]

BILLING CODE 4190–29–P

DEPARTMENT OF TRANSPORTATION

Office of the Secretary

Reports, Forms and Recordkeeping Requirements; Agency Information Collection Activity Under OMB Review

AGENCY: Department of Transportation (DOT), Office of the Secretary (OST).

ACTION: Notice.

SUMMARY: In compliance with the Paperwork Reduction Act (44 U.S.C. 3501 *et seq.*), this notice announces that the Information Collection Request (ICR) abstracted below has been forwarded to the Office of Management and Budget (OMB) for review and comment. The ICR describes the nature of the information collection and its expected cost and burden. The Federal Register Notice with a 60-day comment period soliciting comments on the following collection of information was published on August 27, 1996 [FR 61, page 44118].

DATES: Comments must be submitted on or before February 10, 1997.

FOR FURTHER INFORMATION CONTACT: Richard Weaver, 400 Seventh Street, SW., Washington, DC 20590. Telephone 202–366–2811.

SUPPLEMENTARY INFORMATION:

Maritime Administration

Title: Application for Construction Reserve Fund and Annual Statements.

Type of Request: Extension of currently approved information collection.

OMB Control Number: 2133–0032.

Affected Public: U.S. citizens who own or operate one or more vessels in the foreign or domestic commerce of the United States and wish to receive benefits under the CRF program.

Abstract: The collection consists of an application required from all citizens who own or operate vessels in the U.S. foreign or domestic commerce and desire ''tax'' benefits under the Construction Reserve Fund (CRF) program. The annual statements set forth a detailed analysis of the status of the CRF when each income tax return is filed. Checks for withdrawals from the CRF must be sent to MARAD for countersignature and return for effecting the withdrawal.

Need and Use of the Information: The application is required in order for MARAD to determine whether the applicant qualifies for the benefits and for the applicant to obtain benefits under the CRF program. The annual statements are required from each respondent in order for MARAD to assure that the requirements of the program are being satisfied.

Annual Burden: 54 hours.

ADDRESSES: Send comments to the Office of Information and Regulatory Affairs, Office of Management and Budget, 725–17th Street, NW., Washington, DC 20503, Attention DOT Desk Officer.

Comments are Invited on: whether the proposed collection of information is necessary for the proper performance of the functions of the Department, including whether the information will have practical utility; the accuracy of the Department's estimate of the burden of the proposed information collection; ways to enhance the quality, utility and clarity of the information to be collected; and ways to minimize the burden of the collection of information on respondents, including the use of automated collection techniques or other forms of information technology.

Issued in Washington, DC, on January 6, 1997.

Phillip A. Leach,

Clearance Officer, United States Department of Transportation.

[FR Doc. 97–607 Filed 1–9–97; 8:45 am]

BILLING CODE 4910–62–P

Notice of Applications for Certificates of Public Convenience and Necessity and Foreign Air Carrier Permits Filed Under Subpart Q During the Week Ending January 3, 1997

The following Applications for Certificates of Public Convenience and Necessity and Foreign Air Carrier Permits were filed under Subpart Q of the Department of Transportation's Procedural Regulations (See 14 CFR 302.1701 *et. seq.*). The due date for Answers, Conforming Applications, or Motions to modify Scope are set forth below for each application. Following the Answer period DOT may process the

application by expedited procedures. Such procedures may consist of the adoption of a show-cause order, a tentative order, or in appropriate cases a final order without further proceedings.

Docket Number: OST–96–2040.

Date filed: December 31, 1996.

Due Date for Answers, Conforming Applications, or Motion to Modify Scope: January 28, 1997.

Description: Application of Delta Air Lines, Inc., pursuant to 49 U.S.C. Sections 41102 and 41108, and Subpart Q of the Regulations, applies for renewal of its certificate of public convenience and necessity for Route 526, issued by Order 87–5–5, served May 8, 1987, and renewed by Order 92–6–21 (served June 12, 1992), authorizing Delta to engage in foreign air transportation of persons, property and mail between the terminal points Cincinnati, Ohio and London (Gatwick), England.

Paulette V. Twine,

Chief, Documentary Services.

[FR Doc. 97–608 Filed 1–9–97; 8:45 am]

BILLING CODE 4910–62–P

Coast Guard

[CGD 96–071]

Chemical Transportation Advisory Committee; Vacancies

AGENCY: Coast Guard, DOT.

ACTION: Request for applications.

SUMMARY: The Coast Guard is seeking applications for appointment to membership on the Chemical Transportation Advisory Committee (CTAC). CTAC provides advice and makes recommendations to the Coast Guard on matters relating to the safe transportation and handling of hazardous materials in bulk on U.S. flag vessels and barges in U.S. ports and waterways.

DATES: Applications and any supporting information must be received on or before April 14, 1997.

ADDRESSES: Application forms may be obtained by writing Commandant (G–MSO–3), U.S. Coast Guard, 2100 Second Street SW., Washington, DC 20593–0001; by calling (202) 267–0087; or by faxing (202) 267–4570. Completed application forms must be submitted to the same address.

FOR FURTHER INFORMATION CONTACT: Commander Kevin S. Cook, Executive Director of CTAC, or Lieutenant J.J. Plunkett, Assistant to the Executive Director, telephone (202) 267–0087, fax (202) 267–4570.

SUPPLEMENTARY INFORMATION: The Chemical Transportation Advisory Committee (CTAC) is a Federal advisory committee constituted under 5 U.S.C. App. 2. It provides advice and makes recommendations to the Assistant Commandant for Marine Safety and Environmental Protection on matters relating to the safe transportation and handling of hazardous materials in bulk on U.S. flag vessels and barges in U.S. ports and waterways. The advice and recommendations of CTAC also assist the U.S. Coast Guard in formulating U.S. positions prior to meetings of the International Maritime Organization.

CTAC meets at least once a year at Coast Guard Headquarters, Washington, DC. It may also meet for extraordinary purposes. Its subcommittees and working groups may meet to consider specific problems as required.

The Coast Guard will consider applications for ten positions that expire or become vacant in September 1997. To be eligible, applicants should have experience in chemical manufacturing, marine transportation of chemicals, occupational safety and health, or environmental protection issues associated with chemical transportation. Each member serves for a term of 3 years. A few members may serve consecutive terms. All members serve at their own expense, and receive no salary, reimbursement of travel expenses, or other compensation from the Federal Government.

In support of the Department of Transportation's policy on ethnic and gender diversity, the Coast Guard is especially seeking applications from qualified women and minority group members.

Applicants may be required to complete an Executive Branch Confidential Financial Disclosure Report (SF 450).

Dated: January 3, 1997.

Joseph J. Angelo,

Director of Standards, Marine Safety and Environmental Protection.

[FR Doc. 97–604 Filed 1–9–97; 8:45 am]

BILLING CODE 4910–14–M

National Highway Traffic Safety Administration

[Docket No. 96–106; Notice 2]

Decision That Nonconforming 1997 Mercedes-Benz Gelaendewagen Type 463 Multi-Purpose Passenger Vehicles Are Eligible for Importation

AGENCY: National Highway Traffic Safety Administration (NHTSA), DOT.

ACTION: Notice of decision by NHTSA that nonconforming 1997 Mercedes-Benz Gelaendewagen Type 463 multi-purpose passenger vehicles (MPVs) are eligible for importation.

SUMMARY: This notice announces the decision by NHTSA that 1997 Mercedes-Benz Gelaendewagen Type 463 MPVs not originally manufactured to comply with all applicable Federal motor vehicle safety standards are eligible for importation into the United States because they have safety features that comply with, or are capable of being altered to comply with, all such standards.

DATES: The decision is effective January 10, 1997.

FOR FURTHER INFORMATION CONTACT: George Entwistle, Office of Vehicle Safety Compliance, NHTSA (202–366–5306).

SUPPLEMENTARY INFORMATION:

Background

Under 49 U.S.C. 30141(a)(1)(A), a motor vehicle that was not originally manufactured to conform to all applicable Federal motor vehicle safety standards shall be refused admission into the United States unless NHTSA has decided that the motor vehicle is substantially similar to a motor vehicle originally manufactured for importation into and sale in the United States, certified under 49 U.S.C. 30115, and of the same model year as the model of the motor vehicle to be compared, and is capable of being readily altered to conform to all applicable Federal motor vehicle safety standards. Where there is no substantially similar U.S.-certified motor vehicle, 49 U.S.C. 30141(a)(1)(B) permits a nonconforming motor vehicle to be admitted into the United States if its safety features comply with, or are capable of being altered to comply with, all applicable Federal motor vehicle safety standards based on destructive test data or such other evidence as NHTSA decides to be adequate.

Petitions for eligibility decisions may be submitted by either manufacturers or importers who have registered with NHTSA pursuant to 49 CFR Part 592. As specified in 49 CFR 593.7, NHTSA publishes notice in the Federal Register of each petition that it receives, and affords interested persons an opportunity to comment on the petition. At the close of the comment period, NHTSA decides, on the basis of the petition and any comments that it has received, whether the vehicle is eligible for importation. The agency then publishes this determination in the Federal Register.

Europa International, Inc. of Santa Fe, New Mexico (''Europa'') (Registered Importer No. R–91–002) petitioned NHTSA to decide whether 1997 Mercedes-Benz Gelaendewagen Type 463 MPVs are eligible for importation into the United States. NHTSA published notice of the petition on October 9, 1996 (61 FR 52990) to afford an opportunity for public comment. As described in the notice of the petition, Europa claimed that the 1997 Mercedes-Benz Gelaendewagen Type 463 MPV has safety features that comply with Standard Nos. 102 *Transmission Shift Lever Sequence* * * * (based on visual inspection and operation), 103 *Defrosting and Defogging Systems* (based on visual inspection), 104 *Windshield Wiping and Washing Systems* (based on operation), 113 *Hood Latch Systems* (based on information in owner's manual describing operation of secondary latch mechanism), 116 *Brake Fluids* (based on visual inspection of certification markings and information in owner's manual describing fluids installed at factory), 119 *New Pneumatic Tires for Vehicles Other Than Passenger Cars* (based on visual inspection of certification markings), 124 *Accelerator Control Systems* (based on operation and comparison to U.S.-certified vehicles), 201 *Occupant Protection in Interior Impact* (based on test data and certification of vehicle to European standard), 202 *Head Restraints* (based on Standard No. 208 test data for prior model year vehicle with same head restraint and certification of vehicle to European standard), 204 *Steering Control Rearward Displacement* (based on test film for prior model year vehicle), 205 *Glazing Materials* (based on visual inspection of certification markings), 207 *Seating Systems* (based on test results and certification of vehicle to European standard), 209 *Seat Belt Assemblies* (based on wiring diagram of seat belt warning system and visual inspection of certification markings), 211 *Wheel Nuts, Wheel Discs and Hubcaps* (based on visual inspection), 214 *Side Impact Protection* (based on test results for prior model year vehicle), and 219 *Windshield Zone Intrusion* (based on test results and certification information for prior model year vehicle).

The petitioner also contended that the 1997 Mercedes-Benz Gelaendewagen Type 463 MPV is capable of being altered to comply with the following standards, in the manner indicated:

Standard No. 101 *Controls and Displays:* (a) substitution of a lens marked ''Brake'' for a lens with an ECE symbol on the brake failure indicator lamp; (b) installation of a speedometer/odometer calibrated in miles per hour.

Standard No. 108 *Lamps, Reflective Devices and Associated Equipment:* (a) installation of U.S.-model sealed beam headlamps; (b) installation of U.S.-model side marker lamps and reflectors; (c) installation of a high mounted stop lamp. The petitioner asserted that testing performed on the taillamp reveals that it complies with the standard, even though it lacks a DOT certification marking, and that all other lights are DOT certified.

Standard No. 111 *Rearview Mirrors:* inscription of the required warning statement on the convex surface of the passenger side rearview mirror.

Standard No. 114 *Theft Protection:* installation of a warning buzzer in the steering lock electrical circuit.

Standard No. 118 *Power-Operated Window Systems:* rewiring of the power window system so that the window transport is inoperative when the front doors are open.

Standard No. 120 *Tire Selection and Rims for Vehicles other than Passenger Cars:* installation of a tire information placard. The petitioner asserted that even though the tire rims lack a DOT certification marking, they comply with the standard, based on their manufacturer's certification that they comply with the German TUV regulations, as well as their certification by the British Standards Association and the Rim Association of Australia.

Standard No. 206 *Door Locks and Door Retention Components:* installation of interior locking buttons on all door locks and modification of rear door locks to disable latch release controls when locking mechanism is engaged.

Standard No. 208 *Occupant Crash Protection:* (a) installation of complying driver's and passenger's side air bag systems; (b) installation of a seat belt warning system; (c) placement of an air bag warning label on the visors of vehicles manufactured after November 1996. The petitioner stated that the vehicle will meet frontal impact test requirements with structural modifications described in a submission that has been granted confidentiality by NHTSA's Office of Chief Counsel under 49 CFR Part 512.

Standard No. 210 *Seat Belt Assembly Anchorages:* insertion of instructions on the installation and use of child restraints in the owner's manual for the vehicle. The petitioner certified that the vehicle complies with this standard on the basis of tests performed to the standard's requirements by an independent testing and engineering laboratory.

Standard No. 212 *Windshield Retention:* application of cement to the windshield's edges.

Standard No. 301 *Fuel System Integrity:* installation of a rollover valve.

Standard No. 302 *Flammability of Interior Materials:* treatment of fabric seating surfaces with a flame-proof spray.

The petitioner additionally stated that a vehicle identification number (VIN) plate must be attached to the vehicle's dash so that it is visible to an observer at the driver's side ''A'' pillar, as required by 49 CFR Part 565. The petitioner also stated that a vehicle rollover warning statement must be inserted in the owner's manual and on a sticker affixed to the driver's side visor of short wheelbase Gelaendewagens, as required by 49 CFR 575.105.

No comments were received in response to the notice of the petition. Based on its review of the information submitted by the petitioner, NHTSA has decided to grant the petition.

Vehicle Eligibility Number for Subject Vehicles

The importer of a vehicle admissible under any final determination must indicate on the form HS–7 accompanying entry the appropriate vehicle eligibility number indicating that the vehicle is eligible for entry. VCP–15 is the vehicle eligibility number assigned to vehicles admissible under this determination.

Final Determination

Accordingly, on the basis of the foregoing, NHTSA hereby decides that 1997 Mercedes-Benz Gelaendewagen Type 463 MPVs are eligible for importation into the United States because they have safety features that comply with, or are capable of being altered to comply with, all applicable Federal motor vehicle safety standards.

Authority: 49 U.S.C. § 30141 (a)(1)(B) and (b)(1); 49 CFR 593.8; delegations of authority at 49 CFR 1.50 and 501.8.

Issued on January 6, 1997.

Marilynne Jacobs,

Director, Office of Vehicle Safety Compliance.

[FR Doc. 97–602 Filed 1–9–97; 8:45 am]

BILLING CODE 4910–59–P

Surface Transportation Board

[STB Finance Docket No. 33318]

Port of Columbia—Acquisition Exemption—Union Pacific Railroad Company

Port of Columbia (Port) has filed a verified notice of exemption under 49 CFR 1150.31 to acquire approximately 37.4 miles of rail line owned by Union Pacific Railroad Company (UP) between milepost 48.0 near Walla Walla, WA, and milepost 71.3 at Bolles, WA, and between milepost 0.0 at Bolles, WA, and milepost 14.06 at Dayton, WA.[1] Consummation was expected to occur on or shortly after December 19, 1996.

If the notice contains false or misleading information, the exemption is void *ab initio.* Petitions to revoke the exemption under 49 U.S.C. 10502(d) may be filed at any time. The filing of a petition to revoke will not automatically stay the transaction.

An original and 10 copies of all pleadings, referring to STB Finance Docket No. 33318, must be filed with the Surface Transportation Board, Office of the Secretary, Case Control Branch, 1201 Constitution Avenue, N.W., Washington, DC 20423 and served on: Karl Morell, Ball Janik LLP, 1455 F Street, N.W., Suite 225, Washington, DC 20005.

Decided: January 6, 1997.

By the board, David M. Konschnik, Director, Office of Proceedings.

Vernon A. Williams,

Secretary.

[FR Doc. 97–629 Filed 1–9–97; 8:45 am]

BILLING CODE 4915–00–P

[1] Blue Mountain Railroad, Inc. (BMR) currently operates over the line pursuant to a lease agreement that was the subject of a notice of exemption in Finance Docket No. 32193. The agreement between UP and the Port is subject to that lease agreement and BMR will continue to operate the line after this transaction is consummated under an assignment of the lease from UP to the Port.

[STB Finance Docket No. 33322]

Georgetown Railroad Company, Acquisition and Operation Exemption, Missouri Pacific Railroad Company

Georgetown Railroad Company (GRR), a Class III rail carrier, has filed a verified notice of exemption under 49 CFR 1150.41 to acquire and operate over approximately 8,338 feet of Missouri Pacific Railroad Company's (MP) line of railroad known as MP's ICC Track No. 11 in Georgetown, which extends from the terminus of GRR's line at milepost 0.0 (MP's former milepost 923.70) in Georgetown, to the east side of Church Street in Georgetown, at milepost 0.54; and MP's undivided one-half interest in ICC Track No. 48, extending from milepost 0.54 south and west 5,470 feet to a point connecting with GRR's line from Kerr, in Williamson County, TX.[1] GRR is also acquiring MP's undivided one-half interest in the 5,478-foot ICC Track No. 47, and a 120-foot section of Track No. 11, in Georgetown, but as these will be used as side tracks, no exemption from 49 U.S.C. 10902 is necessary, due to the statutory exemption for acquisition and operation of side tracks in 49 U.S.C. 10906.

The exemption was effective on December 20, 1996. The parties indicate that consummation of the transaction will occur within 90 days after the effective date of the exemption.

If the verified notice contains false or misleading information, the exemption is void *ab initio.* Petitions to revoke the exemption under 49 U.S.C. 10502(d) may be filed at any time. The filing of a petition to revoke will not automatically stay the transaction.

An original and 10 copies of all pleadings, referring to STB Finance Docket No. 33322, must be filed with the Surface Transportation Board, Office of the Secretary, Case Control Branch, 1201 Constitution Avenue, N.W., Washington, DC 20423. In addition, a copy of each pleading must be served on: Betty Jo Christian, Steptoe & Johnson LLP, 1330 Connecticut Ave., N.W., Washington, DC 20036.

Decided: January 3, 1997.

By the Board, David M. Konschnik, Director, Office of Proceedings.

Vernon A. Williams,

Secretary.

[FR Doc. 97–628 Filed 1–9–97; 8:45 am]

BILLING CODE 4915–00–P

[1] This transaction involves GRR's acquisition and operation of a 1.58-mile segment of track connecting GRR's line from Kerr to Georgetown, TX, with a 16.32-mile line from Georgetown to Granger, TX, that GRR purchased from MP. Abandonment of the line was authorized in *Missouri Pacific Railroad Company—Abandonment—in Williamson County, TX* (Georgetown Branch), Docket No. AB–3 (Sub-No. 94) (ICC served Oct. 21, 1991).

[STB Finance Docket No. 33301]

Peter A. Gilbertson, H. Terry Hearst, Bruce A. Lieberman, R. Lawrence McCaffrey, Jr., and Harold F. Parmly—Continuance in Control Exemption—New York & Atlantic Railway Company

Peter A. Gilbertson, H. Terry Hearst, Bruce A. Lieberman, R. Lawrence McCaffrey, Jr., and Harold F. Parmly (Applicants), noncarrier individuals, have filed a verified notice of exemption to continue in control of New York & Atlantic Railway Company (NYAR), upon NYAR's becoming a Class III rail carrier.

The exemption was to become effective on December 12, 1996, and the transaction is expected to be consummated in the first quarter of 1997.

This transaction is related to STB Finance Docket No. 33300, *New York & Atlantic Railway Company—Operation Exemption—The Long Island Rail Road Company,* wherein NYAR seeks to acquire the freight operations of The Long Island Rail Road Company, including the right to operate the freight business on an exclusive basis.[1]

In addition to the filings mentioned in footnote 1, the Board received a number of letters from local governments, officials, and community leaders concerned with the movement of municipal solid waste (MSW) through their communities. LIRR submitted to the Board's Section of Environmental Analysis (SEA) an Environmental Assessment (EA), which was prepared under the New York State Environmental Quality Review Act by ICF Kaiser Consulting Group, and summary information drawn from its EA. The information provided by LIRR states that MSW carloads are projected to increase regardless of whether LIRR continues to conduct freight operations or the operations are transferred to NYAR.

SEA has carefully reviewed the EA and summary information submitted by LIRR. SEA has determined that the information satisfies the Board's obligations under the National Environmental Policy Act and provides the sufficient analysis which would normally be prepared by SEA in railroad operations that exceed the Board's thresholds at 49 CFR 1105.7(e)(4)(5). Therefore, the EA and summary information will be adopted as the Board's own with a finding that there will be no significant environmental impacts associated with the proposed transaction.

Applicants own and control two existing Class III common carriers by

[1] On December 31, 1996, International Brotherhood of Locomotive Engineers (IBLE) filed a petition to reject the notices of exemption filed in STB Finance Docket Nos. 33300 and 33301 or to revoke the exemptions. The petition also supports a statement by Claire Shulman, President of the Borough of Queens (Shulman), filed December 11, 1996, which IBLE characterizes as a petition for rejection or revocation. By decision served on December 20, 1996, NYAR was granted an extension until January 10, 1997, for its reply to Shulman. The Shulman and IBLE filings, as well as any replies, will be considered by the entire Board in a separate decision.

rail operating in three states: Chicago SouthShore & South Bend Railroad Co., operating in Northern Illinois and Northern Indiana; and Louisville & Indiana Railroad Company, operating in Southern Indiana and Northern Kentucky.

Applicants state that: (i) the railroads will not connect with each other or any railroad in their corporate family; (ii) the continuance in control is not part of a series of anticipated transactions that would connect the railroads with each other or any railroad in their corporate family; and (iii) the transaction does not involve a Class I carrier. Therefore, the transaction is exempt from the prior approval requirements of 49 U.S.C. 11323. *See* 49 CFR 1180.2(d)(2).

Under 49 U.S.C. 10502(g), the Board may not use its exemption authority to relieve a rail carrier of its statutory obligation to protect the interests of its employees. Section 11326(c), however, does not provide for labor protection for transactions under sections 11324 and 11325 that involve only Class III rail carriers. Because this transaction involves Class III rail carriers only, the Board, under the statute, may not impose labor protective conditions for this transaction.

If the notice contains false or misleading information, the exemption is void *ab initio.* Petitions to revoke the exemption under 49 U.S.C. 10502(d) may be filed at any time. The filing of a petition to revoke will not automatically stay the transaction.

An original and 10 copies of all pleadings, referring to STB Finance Docket No. 33301, must be filed with the Surface Transportation Board, Office of the Secretary, Case Control Branch, 1201 Constitution Avenue, N.W., Washington, DC 20423. In addition, a copy of each pleading must be served on Paul C. Oakley, Esq., Weiner, Brodsky, Sidman & Kider, P.C., Suite 800, 1350 New York Avenue, N.W., Washington, DC 20005–4797.

Decided: January 7, 1997.

By the Board, David M. Konschnik, Director, Office of Proceedings.

Vernon A. Williams,

Secretary.

[FR Doc. 97–626 Filed 1–9–97; 8:45 am]

BILLING CODE 4915–00–P

[STB Finance Docket No. 33300]

New York & Atlantic Railway Company; Operation Exemption; The Long Island Rail Road Company

New York & Atlantic Railway Company (NYAR), a noncarrier, has filed a verified notice of exemption under 49 CFR 1150.31 to acquire the freight operations of The Long Island Rail Road Company (LIRR), a New York State public benefit corporation, including the right to operate the freight business on an exclusive basis, and conduct other freight operations on approximately 268.6 route miles in the State of New York, as follows: (1) The Bay Ridge Branch (MP 4.0 to MP 16.0), the Central Extension (MP 19.1 to MP 21.2), and the Bushwick Branch (MP 4.0 to MP 6.0) (collectively, the Freight Line); and (2) the Main Line (MP 9.3 to MP 94.3), the Montauk Branch (MP 0.0 to MP 115.8), the Port Jefferson Branch (MP 24.9 to MP 58.0), the Central Branch (MP 28.7 to MP 35.9), the Central Extension (MP 18.7 to MP 19.1), the Hempstead Branch (MP 13.3 to MP 18.7), the West Hempstead Branch (MP 15.5 to MP 20.1), and the Montauk Cut-off (MP 0.3 to MP 1.3) (collectively the Joint Use Line, and, together with the Freight Line, the Subject Line). LIRR will continue to provide passenger operations on the Joint Use Line. NYAR will conduct exclusive freight operations on the Subject Line for an initial term of 20 years, with an extension option, under certain circumstances, for an additional 10 years.

The exemption was to become effective on December 12, 1996, and the parties expect to consummate the transaction in the first quarter of 1997.

This transaction is related to a concurrently filed verified notice to continue in control of NYAR, upon its becoming a Class III rail carrier in STB Finance Docket No. 33301, *Peter A. Gilbertson, H. Terry Hearst, Bruce A. Lieberman, R. Lawrence McCaffrey, Jr., and Harold F. Parmly —Continuance in Control Exemption—New York & Atlantic Railway Company.*[1]

In addition to the filings mentioned in footnote 1, the Board received a number of letters from local governments, officials, and community leaders concerned with the movement of municipal solid waste (MSW) through their communities. LIRR submitted to the Board's Section of Environmental Analysis (SEA) an Environmental Assessment (EA), which was prepared under the New York State Environmental Quality Review Act by ICF Kaiser Consulting Group, and summary information drawn from its EA. The information provided by LIRR states that MSW carloads are projected to increase regardless of whether LIRR continues to conduct freight operations or the operations are transferred to NYAR.

SEA has carefully reviewed the EA and summary information submitted by LIRR. SEA has determined that the information satisfies the Board's obligations under the National Environmental Policy Act and provides the sufficient analysis which would normally be prepared by SEA in railroad operations that exceed the Board's thresholds at 49 CFR 1105.7(e)(4)(5). Therefore, the EA and summary information will be adopted as the Board's own with a finding that there will be no significant environmental impacts associated with the proposed transaction.

If the verified notice contains false or misleading information, the exemption is void *ab initio.* Petitions to reopen the proceeding to revoke the exemption under 49 U.S.C. 10502(d) may be filed at any time. The filing of a petition to revoke will not automatically stay the transaction.

An original and 10 copies of all pleadings, referring to STB Finance Docket No. 33300, must be filed with the Surface Transportation Board, Office of the Secretary, Case Control Branch, 1201 Constitution Avenue, N.W., Washington, DC 20423. In addition, a copy of each pleading must be served on Paul C. Oakley, Esq., Weiner, Brodsky, Sidman & Kider, P.C., Suite 800, 1350 New York Avenue, N.W., Washington, DC 20005–4797.

Decided: January 7, 1997.

By the Board, David M. Konschnik, Director, Office of Proceedings.

Vernon A. Williams,

Secretary.

[FR Doc. 97–627 Filed 1–9–97; 8:45 am]

BILLING CODE 4915–00–P

[1] On December 31, 1996, International Brotherhood of Locomotive Engineers (IBLE) filed a petition to reject the notices of exemption filed in STB Finance Docket Nos. 33300 and 33301 or to revoke the exemptions. The petition also supports a statement by Claire Shulman, President of the Borough of Queens (Shulman), filed December 11, 1996, which IBLE characterizes as a petition for rejection or revocation. By decision served on December 20, 1996, NYAR was granted an extension until January 10, 1997, for its reply to Shulman. The Shulman and IBLE filings, as well as any replies, will be considered by the entire Board in a separate decision.

[STB Finance Docket No. 33331]

Respondek Railroad Corporation; Acquisition and Operation Exemption; Evansville Terminal Company

Respondek Railroad Corporation (Respondek), a noncarrier, has filed a verified notice of exemption under 49 CFR 1150.31 to acquire and operate approximately 17.7 miles of line owned by the Evansville Terminal Company (Evansville): (1) Between milepost 227.5

at Poseyville, IN, and milepost 244.7 at Evansville, IN; and (2) between milepost B–204.3 and milepost B–205 at Browns, IL.

The transaction was expected to be consummated on or after the December 30, 1996 effective date of the exemption.

If the verified notice contains false or misleading information, the exemption is void *ab initio.* Petitions to reopen the proceeding to revoke the exemption under 49 U.S.C. 10502(d) may be filed at any time. The filing of a petition to reopen will not automatically stay the transaction.

An original and 10 copies of all pleadings, referring to STB Finance Docket No. 33331, must be filed with the Office of the Secretary, Surface Transportation Board, Case Control Branch, 1201 Constitution Avenue, NW., Washington, DC 20423. In addition, a copy of each pleading must be served on Andrew P. Goldstein, Esq., McCarthy, Sweeney & Harkaway, P.C., Suite 1105, 1750 Pennsylvania Avenue, NW., Washington, DC 20006.

Decided: January 3, 1997.

By the board, David M. Konschnik, Director, Office of Proceedings.

Vernon A. Williams,

Secretary.

[FR Doc. 97–625 Filed 1–9–97; 8:45 am]

BILLING CODE 4915–00–P

[STB Docket No. AB–55 (Sub-No. 538X)]

CSX Transportation, Inc.; Abandonment Exemption; in Fayette and Nicholas Counties, WV

CSX Transportation, Inc. (CSXT) has filed a notice of exemption under 49 CFR 1152 Subpart F—*Exempt Abandonments* to abandon approximately 15.27 miles of its line of railroad between milepost CAF–43.7, Valuation Station 1240+00, at Russ Junction and milepost CAF–58.97, Valuation Station 436+00, at Peters Junction, in Fayette and Nicholas Counties, WV.

CSXT has certified that: (1) No local traffic has moved over the line for at least 2 years; (2) there is no overhead traffic on the line; (3) no formal complaint filed by a user of rail service on the line (or by a state or local government entity acting on behalf of such user) regarding cessation of service over the line either is pending with the Surface Transportation Board (Board) or with any U.S. District Court or has been decided in favor of complainant within the 2-year period; and (4) the requirements at 49 CFR 1105.7 (environmental reports), 49 CFR 1105.8 (historic reports), 49 CFR 1105.11 (transmittal letter), 49 CFR 1105.12 (newspaper publication), and 49 CFR 1152.50(d)(1) (notice to governmental agencies) have been met.

As a condition to this exemption, any employee adversely affected by the abandonment shall be protected under *Oregon Short Line R. Co.—Abandonment—Goshen,* 360 I.C.C. 91 (1979). To address whether this condition adequately protects affected employees, a petition for partial revocation under 49 U.S.C. 10502(d) must be filed.

Provided no formal expression of intent to file an offer of financial assistance (OFA) has been received, this exemption will be effective on February 9, 1997, unless stayed pending reconsideration. Petitions to stay that do not involve environmental issues,[1] formal expressions of intent to file an OFA under 49 CFR 1152.27(c)(2),[2] and trail use/rail banking requests under 49 CFR 1152.29[3] must be filed by January 21, 1997. Petitions to reopen or requests for public use conditions under 49 CFR 1152.28 must be filed by January 30, 1997, with: Office of the Secretary, Case Control Branch, Surface Transportation Board, 1201 Constitution Avenue, N.W., Washington, DC 20423.

A copy of any petition filed with the Board should be sent to applicant's representative: Charles M. Rosenberger, Senior Counsel, 500 Water Street, J150, Jacksonville, FL 32202.

If the verified notice contains false or misleading information, the exemption is void *ab initio.*

CSXT has filed an environmental report which addresses the abandonment's effects, if any, on the environment and historic resources. The Section of Environmental Analysis (SEA) will issue an environmental assessment (EA) by January 15, 1997. Interested persons may obtain a copy of the EA by writing to SEA (Room 3219, Surface Transportation Board, Washington, DC 20423) or by calling Elaine Kaiser, Chief of SEA, at (202) 927–6248. Comments on environmental and historic preservation matters must be filed within 15 days after the EA becomes available to the public.

Environmental, historic preservation, public use, or trail use/rail banking conditions will be imposed, where appropriate, in a subsequent decision.

Decided: January 6, 1997.

By the board, David M. Konschnik, Director, Office of Proceedings.

Vernon A. Williams,

Secretary.

[FR Doc. 97–630 Filed 1–9–97; 8:45 am]

BILLING CODE 4915–00–P

---

[1] The Board will grant a stay if an informed decision on environmental issues (whether raised by a party or by the Board's Section of Environmental Analysis in its independent investigation) cannot be made before the exemption's effective date. *See Exemption of Out-of-Service Rail Lines,* 5 I.C.C. 2d 377 (1989). Any request for a stay should be filed as soon as possible so that the Board may take appropriate action before the exemption's effective date.

[2] *See Exempt. of Rail Abandonment—Offers of Finan. Assist.,* 4 I.C.C. 2d 164 (1987).

[3] The Board will accept late-filed trail use requests as long as the abandonment has not been consummated and the abandoning railroad is willing to negotiate an agreement.

DEPARTMENT OF THE TREASURY

Financial Crimes Enforcement Network

Privacy Act of 1974, as Amended, System of Records

AGENCY: Departmental Offices, Treasury.

ACTION: Notice of altered Privacy Act system of records.

SUMMARY: In accordance with the requirements of the Privacy Act of 1974, as amended, 5 U.S.C. 552a, the Financial Crimes Enforcement Network (FinCEN), Department of the Treasury (Treasury), gives notice of a proposed alteration to an existing system of records entitled the ''Bank Secrecy Act Reports File—Treasury/Customs .067'' and its renaming and renumbering as a Treasury-wide system of records ''Bank Secrecy Act Reports System—Treasury/DO .213.'' The system notice was last published in its entirety in the Federal Register, Volume 60, page 56776, November 9, 1995.

DATES: Comments must be received no later than February 10, 1997. The system of records will be effective as of February 19, 1997, unless comments are received that result in a contrary determination and notice is published to that effect.

ADDRESSES: Written comments should be sent to Office of Legal Counsel, FinCEN, 2070 Chain Bridge Road, Suite 200, Vienna, VA 22182–2536, Attention: BSA System of Records. Comments will be made available for inspection and copying by appointment. To make an appointment, please contact Eileen Dolan, Office of Legal Counsel, FinCEN, at 703–905–3590.

FOR FURTHER INFORMATION CONTACT: Cynthia A. Langwiser, Attorney Advisor, Office of Legal Counsel, FinCEN, 2070 Chain Bridge Road, Suite 200, Vienna, VA 22182–2536, (703) 905–3582.

SUPPLEMENTARY INFORMATION: The Department of the Treasury is amending

the existing Privacy Act notice for this system of records, ''Bank Secrecy Act Reports File—Treasury/Customs .067''[1] and renaming and renumbering it as ''Bank Secrecy Act Reports System—Treasury/DO .213.'' This alteration will conform the notice to changes in the designation of the system manager and the location of the system of records as a result of changes in organizational responsibilities in the Department and will more accurately describe the categories of individuals covered by the system, the categories of records included in the system, and the policies and procedures for storage, retrieval, access, retention, and disposal of the records. In addition, three new routine uses for the records will be added. Finally, for purposes of clarity, the proposed alteration makes certain minor editorial changes to the notice and adds text to certain elements.

The system of records contains information collected under the Bank Secrecy Act (BSA), codified at 12 U.S.C. 1829b, 1951–1959 and 31 U.S.C. 5311–5314, 5316–5330, which authorizes the Secretary of the Treasury to issue regulations requiring records and reports of financial transactions that are determined to have a high degree of usefulness in criminal, tax, and regulatory matters. These regulations appear at 31 CFR Part 103. Currently, the system of records containing the reports required by these regulations is a United States Customs Service Privacy Act system of records; however, the authority of the Secretary to administer these regulations, including the authority to disseminate BSA information, was delegated by memorandum dated May 13, 1994 to the Director of FinCEN, an officer reporting to the Office of the Under Secretary (Enforcement). Therefore, it is necessary to move this system of records from the Privacy Act system of records inventory maintained by the Customs Service to the Privacy Act system of records inventory maintained by Treasury's Departmental Offices and to make conforming changes in the notice to reflect the authority of FinCEN's Director over this system of records.

In addition, three new routine uses for the records contained in this system are proposed. The first proposed new routine use, which will be added as routine use (3), will permit disclosure, by electronic means, to Federal and State criminal law enforcement agencies, of information to identify or permit the identification of patterns of suspected illegal activity occurring within their areas of jurisdiction. The second proposed new routine use, which will be added as routine use number (4), will permit disclosure of relevant information to any Federal or State regulatory agency or self regulatory organization that examines for BSA compliance when necessary to their supervisory or compliance responsibilities. The third proposed new in computer matching with requesting Federal and State agencies under agreements approved in accordance with the Privacy Act. The matches will be performed to help eliminate waste, fraud, and abuse in government programs by identifying individuals who may not be eligible for benefit programs and/or potentially in violation of law and regulation. The information disclosed will be limited to those data elements relevant to the purpose of the match. The new routine uses, which are compatible with the criminal and regulatory purposes for which the information is collected, reflect the role technology plays in combating criminal, civil, and regulatory violations and waste, fraud and abuse in government programs, as well as the increasing importance of Federal and State cooperation in law enforcement. Current routine use numbers (3) through (5) will be renumbered as routine uses (6) through (8).

Because information in this system of records may be retrieved by personal identifier, the Privacy Act of 1974 requires the Treasury Department to give general notice and seek public comments.

The altered system of records report, as required by 5 U.S.C. 552a(r), has been submitted to the Committee on Governmental Affairs of the United States Senate, Committee on Government Reform and Oversight of the United States House of Representatives, and the Office of Management and Budget (''OMB''). See Appendix I to OMB Circular A–130, ''Federal Agency Responsibilities for Maintaining Records About Individuals,'' 61 FR 6428, 6436 (February 20, 1996).

The proposed altered system of records, renamed and renumbered as ''Bank Secrecy Act Reports System—Treasury/DO .213,'' is republished in its entirety below.

Dated: December 27, 1996.

Alex Rodriguez,

Deputy Assistant Secretary (Administration).

Treasury/DO .213

SYSTEM NAME:

Bank Secrecy Act Reports System—Treasury/DO .213.

SYSTEM LOCATION:

Electronic Records: Currency and Banking Retrieval System, Internal Revenue Service Detroit Computing Center, 985 Michigan Avenue, Detroit, Michigan, 48226–1129 and Treasury Enforcement Communications System, United States Customs Service Newington, 7681 Boston Boulevard, Springfield, Virginia, 22153–3140.

Paper Records: Form 4790—U.S. Customs Service, Newington, VA. All other forms, including, but not limited to, Form 4789, TDF 90.22–1 and Form 8362—Internal Revenue Service, Detroit, MI.

CATEGORIES OF INDIVIDUALS COVERED BY THE SYSTEM:

Persons identified in reports required to be filed under the Bank Secrecy Act and its implementing regulations (31 CFR part 103) including, but not limited to, reports made on IRS Form 4789 (Currency Transaction Report), IRS Form 8362 (Currency Transaction Report by Casinos), Customs Form 4790 (Report of International Transportation of Currency or Monetary Instruments), Treasury Form TDF 90–22.1 (Report of Foreign Bank and Financial Accounts), and forms filed by casinos located in the State of Nevada in lieu of Form 8362. (This system of records does not cover persons identified in Suspicious Activity Reports, TDF 90–22.47. Those reports are included in another system of records, ''Suspicious Activity Reporting System—Treasury/DO .212'').

CATEGORIES OF RECORDS IN THE SYSTEM:

Reports required to be filed under the Bank Secrecy Act and its implementing regulations (31 CFR part 103) including, but not limited to, reports made on IRS Form 4789 (Currency Transaction Report), IRS Form 8362 (Currency Transaction Report by Casinos), Customs Form 4790 (Report of International Transportation of Currency or Monetary Instruments), Treasury Form TDF 90–22.1 (Report of Foreign Bank and Financial Accounts), and forms filed by casinos located in the State of Nevada in lieu of Form 8362. (This system does not include Suspicious Activity Reports, TDF 90–22.47, required under 31 CFR part 103. Those reports are included in another

[1]The notice for this system of records was published December 2, 1975 at 40 FR 56194 under the title ''Currency and Monetary Instrument Reporting System (CMIR).'' The title ''Currency and Monetary Instrument Reporting System (CMIR)'' was changed to ''Bank Secrecy Act Report File'' by notice published 48 FR 36052 (August 8, 1983), effective October 7, 1983.

system of records, ''Suspicious Activity Reporting System—Treasury/DO .212''). These reports include names of individuals and other entities filing the reports, names of the owners of monetary instruments, the amounts and kinds of currency or other monetary instruments transported, reported, or in foreign banking accounts, account numbers, addresses, dates of birth, and other personal identifiers.

AUTHORITY FOR MAINTENANCE OF THE SYSTEM:

12 U.S.C. 1829b and 1951–1959; 31 U.S.C. 5311–5314, 5316–5330; 5 U.S.C. 301; 31 CFR part 103; Treasury Department Order No. 105–08.

PURPOSE(S):

The Bank Secrecy Act, codified at 12 U.S.C. 1829b and 1951–1959 and 31 U.S.C. 5311–5314, 5316–5330, authorizes the Secretary of the Treasury to issue regulations requiring records and reports that are determined to have a high degree of usefulness in criminal, tax, and regulatory matters. The Secretary's authority has been implemented through regulations promulgated at 31 CFR part 103. The purpose of this system of records is to maintain the information contained on the reports required under these regulations. This information is disseminated, both electronically and manually, in accordance with strict safeguards, to appropriate Federal, State, local and foreign criminal law enforcement and regulatory personnel in the official performance of their duties. The information is used in a wide range of criminal investigations, including, but not limited to, investigation of international and domestic money laundering, tax evasion, fraud, and other financial crimes.

ROUTINE USES OF RECORDS MAINTAINED IN THE SYSTEM, INCLUDING CATEGORIES OF USERS AND THE PURPOSE OF SUCH USES:

These records and information in these records may be used to:(1) Disclose pertinent information to appropriate Federal, State, local, or foreign agencies responsible for investigating or prosecuting the violations of, or for enforcing or implementing, a statute, rule, regulation, order, or license, where the disclosing agency becomes aware of an indication of a violation or potential violation of civil or criminal law or regulation; (2) Disclose information to Federal, State, or local agencies, maintaining civil, criminal or other relevant information, which has requested information relevant to or necessary to the requesting agency's hiring or retention of an individual, or issuance of a security clearance, license, contract, grant, or other benefit; (3) Disclose to appropriate Federal, State, or local agencies engaged in the identification, investigation, and prosecution of violations or potential violations of criminal statutes, information, in a computerized format, to identify or to permit the identification of patterns of suspected criminal activity that fall within the jurisdiction of the agency requesting the information; (4) Disclose information to Federal or State regulatory agencies or self regulatory agencies responsible for supervising compliance with the Bank Secrecy Act, limited to information relevant to meeting supervisory or compliance responsibilities; (5) Disclose relevant information on individuals to authorized Federal and State agencies through computer matching in order to help eliminate waste, fraud, and abuse in Government programs and identify individuals who are potentially in violation of civil law, criminal law, or regulation; (6) Disclose information to a court, magistrate, or administrative tribunal in the course of presenting evidence, including disclosures to opposing counsel or witnesses in the course of civil discovery, litigation, or settlement negotiations, in response to a subpoena, or in connection with criminal law proceedings; (7) Provide information to the news media, in accordance with guidelines contained in 28 CFR 50.2, that relates to an agency's functions relating to civil and criminal proceedings; and (8) Provide information to third parties during the course of an investigation to the extent necessary to obtain information pertinent to the investigation.

POLICIES AND PRACTICES FOR STORING, RETRIEVING, ACCESSING, RETAINING, AND DISPOSING OF RECORDS IN THE SYSTEM:

STORAGE:

Records are maintained in magnetic media and on hard paper copy.

RETRIEVABILITY:

By name and other unique identifier.

SAFEGUARDS:

All persons with electronic access to records in the system will have successfully completed a background investigation. All State and local agency personnel, and all Federal personnel outside the U.S. Department of the Treasury with electronic access will have successfully completed appropriate training. Passwords and access controls will be utilized. Signed agreements outlining usage and dissemination rules are required of all non-Treasury agencies before electronic access is authorized. Procedural and physical safeguards include: The logging of all queries and periodic review of such query logs; compartmentalization of information to restrict access to authorized personnel; physical protection of sensitive hard copy documents and magnetic tapes; encryption of electronic communications; intruder alarms and other security devices; and 24–hour building guards. The system complies with all applicable security requirements of the Department of the Treasury.

RETENTION AND DISPOSAL:

Indefinite.

SYSTEMS MANAGER(S) AND ADDRESS:

General Policy: Director, Financial Crimes Enforcement Network, 2070 Chain Bridge Road, Vienna, Virginia 22182–2536

Computer Systems Maintenance and Administration: Director, IRS Computing Center, 985 Michigan Avenue, Detroit, Michigan, 48226–1129 and Director, Office of Information Technology, U.S. Customs Service Newington, 7681 Boston Boulevard, Springfield, Virginia, 22153–3140.

NOTIFICATION PROCEDURE:

This system is exempt from notification requirements, record access requirements, and requirements that an individual be permitted to contest its contents, pursuant to the provisions of 5 U.S.C. 552a(j)(2) and (k)(2).

RECORD ACCESS PROCEDURES:

See ''Notification Procedure'' above.

CONTESTING RECORD PROCEDURES:

See ''Notification Procedure'' above.

RECORD SOURCE CATEGORIES:

Pursuant to the provisions of 5 U.S.C. 552a(j)(2) and (k)(2), this system is exempt from the requirement that the record source categories be disclosed.

EXEMPTIONS CLAIMED FOR THE SYSTEM:

This system is exempt from 5 U.S.C. 552a(c)(3), (c)(4), (d)(1), (d)(2), (d)(3), (d)(4), (e)(1), (e)(2), (e)(3), (e)(4)(G), (e)(4)(H), (e)(4)(I), (e)(5), (e)(8), (f) and (g) of the Privacy Act pursuant to 5 U.S.C. 552a(j)(2) and (k)(2). See 31 CFR 1.36.

[FR Doc. 97–605 Filed 1–9–97; 8:45 am]

Billing Code: 4810–25–F

Internal Revenue Service

Proposed Collection; Comment Request For Form 8508

AGENCY: Internal Revenue Service (IRS), Treasury.

ACTION: Notice and request for comments.

SUMMARY: The Department of the Treasury, as part of its continuing effort to reduce paperwork and respondent burden, invites the general public and other Federal agencies to take this opportunity to comment on proposed and/or continuing information collections, as required by the Paperwork Reduction Act of 1995, Public Law 104–13 (44 U.S.C. 3506(c)(2)(A)). Currently, the IRS is soliciting comments concerning Form 8508, Request for Waiver From Filing Information Returns on Magnetic Media.

DATES: Written comments should be received on or before March 11, 1997 to be assured of consideration.

ADDRESSES: Direct all written comments to Garrick R. Shear, Internal Revenue Service, room 5571, 1111 Constitution Avenue NW., Washington, DC 20224.

FOR FURTHER INFORMATION CONTACT: Requests for additional information or copies of the information collection should be directed to Carol Savage, (202) 622–3945, Internal Revenue Service, room 5569, 1111 Constitution Avenue NW., Washington, DC 20224.

SUPPLEMENTARY INFORMATION:

Title: Request for Waiver From Filing Information Returns on Magnetic Media.

OMB Number: 1545–0957.

Form Number: Form 8508.

Abstract: Certain filers of information returns are required by law to file on magnetic media. In some instances, waivers from this requirement are necessary and justified. Form 8508 is submitted by the filer and provides information on which Internal Revenue Service will base its waiver determination.

Current Actions: On Form 8508 box 10 was eliminated because box 11 provided sufficient information and more closely follows the regulation regarding undue hardship. Also, box 7 will include territorial W–2s which now have the same magnetic/electronic filing requirements as other information returns.

Type of Review: Revision of a currently approved collection.

Affected Public: Businesses or other for-profit organizations, non-profit institutions, farms, Federal Government, and state, local or tribal government.

Estimated Number of Respondents: 1,000.

Estimated Time Per Respondent: 45 minutes.

Estimated Total Annual Burden Hours: 750.

The following paragraph applies to all of the collections of information covered by this notice:

An agency may not conduct or sponsor, and a person is not required to respond to, a collection of information unless the collection of information displays a valid OMB control number. Books or records relating to a collection of information must be retained as long as their contents may become material in the administration of any internal revenue law. Generally, tax returns and tax return information are confidential, as required by 26 U.S.C. 6103.

Request for Comments

Comments submitted in response to this notice will be summarized and/or included in the request for OMB approval. All comments will become a matter of public record. Comments are invited on: (a) Whether the collection of information is necessary for the proper performance of the functions of the agency, including whether the information shall have practical utility; (b) the accuracy of the agency's estimate of the burden of the collection of information; (c) ways to enhance the quality, utility, and clarity of the information to be collected; (d) ways to minimize the burden of the collection of information on respondents, including through the use of automated collection techniques or other forms of information technology; and (e) estimates of capital or start-up costs and costs of operation, maintenance, and purchase of services to provide information.

Approved: January 6, 1997.

Garrick R. Shear,

IRS Reports Clearance Officer.

[FR Doc. 97–528 Filed 1–9–97; 8:45 am]

BILLING CODE 4830–01–U

federal register

Friday
January 10, 1997

Part II

Department of Labor

Occupational Safety and Health Administration

29 CFR Parts 1910, 1915 and 1926

Occupational Exposure to Methylene Chloride; Final Rule

DEPARTMENT OF LABOR

Occupational Safety and Health Administration

29 CFR Parts 1910, 1915 and 1926

RIN 1218–AA98

Occupational Exposure to Methylene Chloride

AGENCY: Occupational Safety and Health Administration (OSHA), Department of Labor.

ACTION: Final rule.

SUMMARY: The Occupational Safety and Health Administration (OSHA) hereby amends its existing regulations for employee exposure to methylene chloride (MC), (also known as methylene dichloride, dichloromethane or DCM). OSHA has determined, based on animal and human data, that the current permissible exposure limits (PELs) allow employee exposure to a significant risk of material impairment of health. OSHA is reducing the existing 8-hour time-weighted average (TWA) exposure from 500 parts MC per million parts (ppm) of air to 25 ppm. Also, OSHA is deleting the existing ceiling limit concentration of 1,000 ppm and is reducing the existing short-term exposure limit from 2,000 ppm (measured over five minutes in any 2 hour period) to 125 ppm, measured as a 15-minute TWA. In addition, the Agency is setting an ''action level'' of 12.5 ppm, measured as an 8-hour TWA. The final rule also contains provisions for exposure control, personal protective equipment, employee exposure monitoring, training, medical surveillance, hazard communication, regulated areas, and recordkeeping. Together, these provisions will substantially reduce significant risk to the extent feasible. This standard applies to all employment in general industry, shipyards and construction. Small employers, for purposes of the Regulatory Flexibility Act, 5 U.S.C. 601, are defined as firms with fewer than twenty employees. The final standard will prevent an estimated 31 cancer deaths per year and an estimated three deaths per year from acute central nervous system and carboxyhemoglobinemic effects, and will also reduce cardiovascular disease and material impairment of the central nervous system. The estimated cost, on an annualized basis, is $101 million per year.

DATES: This final rule becomes effective April 10, 1997.

Compliance: Start-up dates for specific provisions are set in § 1910.1052(n) of the regulatory text. However, affected parties do not have to comply with the information collection requirements in § 1910.1052(d) exposure monitoring, § 1910.1052(e) regulated areas, § 1910.1052(j) medical surveillance, § 1910.1052(l) employee information and training; and § 1910.1052(m) recordkeeping, until the Department of Labor publishes in the Federal Register the control numbers assigned by the Office of Management and Budget (OMB). Publication of the control numbers notifies the public that OMB has approved these information collection requirements under the Paperwork Reduction Act of 1995.

Comments: Interested parties may submit comments on the information collection requirements for this standard until March 11, 1997.

ADDRESSES: In compliance with 28 U.S.C. 2112(a), the Agency designates the Associate Solicitor for Occupational Safety and Health, Office of the Solicitor, Room S–4004, U.S. Department of Labor, 200 Constitution Avenue, NW., Washington, D.C. 20210, as the recipient of petitions for review of the standard.

Comments on the paperwork requirements of this final rule are to be submitted to the Docket Office, Docket No. ICR96–15, U.S. Department of Labor, Room N–2625, 200 Constitution Ave., NW., Washington D.C. 20210, telephone (202) 219–7894. Written comments limited to 10 pages or less in length may also be transmitted by facsimile to (202) 219–5046.

Copies of the referenced information collection request are available for inspection and copying in the Docket Office and will be mailed immediately to persons who request copies by telephoning Vivian Allen at (202) 219–8076. For electronic copies of the Methylene Chloride Final Standard and the Information Collection Request, contact OSHA's WebPage on Internet at http://www.osha.gov/.

FOR FURTHER INFORMATION CONTACT: Bonnie Friedman, Director, OSHA Office of Public Affairs, Room N–3647, U.S. Department of Labor, 200 Constitution Avenue, NW, Washington, D.C. 20210; Telephone (202) 219–8148.

SUPPLEMENTARY INFORMATION:

Collections of Information: Comment Request

The Department of Labor, as part of its continuing effort to reduce paperwork and respondent burden, conducts a preclearance consultation program to provide the general public and Federal agencies with an opportunity to comment on proposed and/or continuing collections of information in accordance with the Paperwork Reduction Act of 1995 (PRA95) (44 U.S.C. 3506(c)(2)(A)). This program helps to ensure that requested data can be provided in the desired format, reporting burden (time and financial resources) is minimized, collection instruments are clearly understood, and the impact of collection requirements on respondents can be properly assessed. Currently, OSHA is soliciting comments concerning the proposed approval for the paperwork requirements of the Methylene Chloride Final Standard. Written comments should:

- Evaluate whether the proposed collection of information is necessary for the proper performance of the functions of the agency, including whether the information will have practical utility;
- Evaluate the accuracy of the agency's estimate of the burden of the proposed collection of information, including the validity of the methodology and assumptions used;
- Enhance the quality, utility, and clarity of the information to be collected; and
- Minimize the burden of the collection of information on those who are to respond, including through the use of appropriate automated, electronic, mechanical, or other technological collection techniques or other forms of information technology, e.g., permitting electronic submissions of responses.

Background: The Methylene Chloride Standard and its information collection requirements are designed to provide protection for employees from adverse health effects associated with occupational exposure to MC. The standard requires employers to monitor employee exposure to MC and inform employees of monitoring results. If monitoring results are above the 8-hour TWA PEL or the STEL, then employers must also inform employees of the corrective action that will be taken to reduce employee exposure to or below the 8-hour PEL or STEL. Employers may also be required to provide medical surveillance to employees who are or may be exposed to MC. Employers are also required to provide information and training to employees on the following: health effects of MC, specifics regarding use of MC in the workplace, the contents of the standard, and means the employee can take to protect themselves from overexposure to MC.

Current Actions: This notice requests public comment on the paperwork requirements in the Methylene Chloride Final Standard. The Agency previously sought clearance on three Methylene

Chloride Notice of Proposed Rulemaking Information Collection Requests: Shipyards, 1218–0177; Construction, 1218–0178; and General Industry, 1218–0179. Since the information requirements are identical for each industry, the Agency has combined these three packages into one entitled Methylene Chloride § 1910.1052, OMB number 1218–0179.

Type of Review: Revision of a currently approved collection.

Agency: Occupational Safety and Health Administration.

Title: Methylene Chloride § 1910.1052.

OMB Number: 1218–0179.

Agency Number: Methylene Chloride Docket Number H–71.

Recordkeeping: Employers must maintain employee medical records for at least the duration of employment plus thirty years. Employee exposure monitoring records must be maintained for at least 30 years. Objective data, data showing that any materials in the workplace containing MC will not release MC at levels which exceed the action level or the STEL under foreseeable condition of exposures, must be maintained as long as the employer is relying on the data in support of the initial monitoring exemption.

Affected Public: Business or other for-profit, Federal government, State and Local governments.

Total Respondents: 92,000.

Frequency: On Occasion.

Total Responses: Initial 719,948; Recurring 299,620.

Average Time per Response: 0.26 hour.

Estimated Total Burden Hours: Initial 188,728; Recurring 74,299.

Estimated Total Burden Cost: Initial $32,496,380; Recurring $12,282,420.

Comments submitted in response to this notice will be summarized and/or included in the request for the Office of Management and Budget approval of the information collection request; they will also become a matter of public record.

Federalism

This standard has been reviewed in accordance with Executive Order 12612, 52 FR 41685 (October 30, 1987), regarding Federalism. This Order requires that agencies, to the extent possible, refrain from limiting State policy options, consult with States prior to taking any actions that would restrict State policy options, and take such actions only when there is a clear constitutional authority and the presence of a problem of national scope. The Order provides for preemption of State law only if there is a clear Congressional intent for the Agency to do so. Any such preemption is to be limited to the extent possible.

Section 18 of the Occupational Safety and Health Act (OSH Act), expresses Congress' clear intent to preempt State laws with respect to which Federal OSHA has promulgated occupational safety or health standards. Under the OSH Act, a State can avoid preemption only if it submits, and obtains Federal approval of, a plan for the development of such standards and their enforcement. Occupational safety and health standards developed by such State Plan-States must, among other things, be at least as effective in providing safe and healthful employment and places of employment as the Federal standards. Where such standards are applicable to products distributed or used in interstate commerce, they may not unduly burden commerce and must be justified by compelling local conditions (See section 18(c)(2)).

The final MC standard is drafted so that employees in every State will be protected by general, performance-oriented standards. States with occupational safety and health plans approved under section 18 of the OSH Act will be able to develop their own State standards to deal with any special problems which might be encountered in a particular state. Moreover, the performance nature of this standard, of and by itself, allows for flexibility by States and employers to provide as much leeway as possible using alternative means of compliance.

This final MC rule addresses a health problem related to occupational exposure to MC which is national in scope.

Those States which have elected to participate under section 18 of the OSH Act would not be preempted by this regulation and will be able to deal with special, local conditions within the framework provided by this performance-oriented standard while ensuring that their standards are at least as effective as the Federal Standard.

State Plans

The 23 States and two territories with their own OSHA-approved occupational safety and health plans must adopt a comparable standard within six months of the publication of this final standard for occupational exposure to methylene chloride or amend their existing standards if it is not ''at least as effective'' as the final Federal standard. The states and territories with occupational safety and health state plans are: Alaska, Arizona, California, Connecticut (for State and local government employees only), Hawaii, Indiana, Iowa, Kentucky, Maryland, Michigan, Nevada, New Mexico, New York (for State and local government employees only), North Carolina, Oregon, Puerto Rico, South Carolina, Tennessee, Utah, Vermont, Virginia, the Virgin Islands, Washington, and Wyoming. Until such time as a State standard is promulgated, Federal OSHA will provide interim enforcement assistance, as appropriate, in these states and territories.

Unfunded Mandates

The MC final rule has been reviewed in accordance with the Unfunded Mandates Reform Act of 1995 (UMRA) (2 U.S.C. 1501 *et seq.*) and Executive Order 12875. As discussed below in the Summary of the Final Economic Analysis (FEA) (Section VIII of this document), OSHA estimates that compliance with the revised MC standard will require the expenditure of slightly more than $100 million each year by employers in the private sector. Therefore, the MC final rule establishes a federal private sector mandate and is a significant regulatory action, within the meaning of Section 202 of UMRA (2 U.S.C. 1532). OSHA has included this statement to address the anticipated effects of the MC final rule pursuant to Section 202.

OSHA standards do not apply to state and local governments, except in states that have voluntarily elected to adopt an OSHA State Plan. Consequently, the MC standard does not meet the definition of a ''Federal intergovernmental mandate'' (Section 421(5) of UMRA (2 U.S.C. 658(5)). In addition, the Agency has concluded, based on review of the rulemaking record, that few, if any, of the affected employers are state, local and tribal governments. Further, OSHA has found that any impact on such entities would be insignificant. In sum, the MC standard does not impose unfunded mandates on state, local and tribal governments.

The anticipated benefits and costs of this final standard are addressed in the Summary of the FEA (Section VIII of this document), below, and in the FEA [Ex. 129]. In addition, pursuant to Section 205 of the UMRA (2 U.S.C. 1535), having considered a reasonable number of alternatives as outlined in this Preamble and in the FEA [Ex. 129], the Agency has concluded that the final rule is the most cost-effective alternative for implementation of OSHA's statutory objective of reducing significant risk to the extent feasible. This is discussed at length in the FEA [Ex. 129] and in the Summary and Explanation (Section X of

this document) for the various provisions of the MC standard.

I. General

The preamble to the final rule on occupational exposure to Methylene Chloride (MC) discusses the events leading to the final rule, the physical and chemical properties of MC, the health effects of exposure, the degree and significance of the risk presented by MC exposure, the Final Economic Analysis and Regulatory Flexibility Analysis, and the rationale behind the specific provisions set forth in the final standard. The discussion follows this outline:

I. General
II. Pertinent Legal Authority
III. Events Leading to the Final Standard
IV. Chemical Identification
V. Health Effects
VI. Quantitative Risk Assessment
VII. Significance of Risk
VIII. Summary of the Final Economic Analysis
IX. Environmental Impact
X. Summary and Explanation of the Final Standard
A. Scope and Application
B. Definitions
C. Permissible Exposure Limits
D. Exposure Monitoring
E. Regulated Areas
F. Methods of Compliance
G. Respiratory Protection
H. Protective Clothing and Equipment
I. Hygiene Facilities
J. Medical Surveillance
K. Hazard Communication
L. Employee Information and Training
M. Recordkeeping
N. Dates
O. Appendices
XI. Authority and Signature
XII. Final Rule and Appendices
Appendix A: Substance Safety Data Sheet and Technical Guidelines for Methylene Chloride
Appendix B: Medical Surveillance for Methylene Chloride
Appendix C: Questions and Answers—Methylene Chloride Control in Furniture Stripping

II. Pertinent Legal Authority

The purpose of the Occupational Safety and Health Act, 29 U.S.C. 651 *et seq.* (''the Act'') is to ''assure so far as possible every working man and woman in the nation safe and healthful working conditions and to preserve our human resources.'' 29 U.S.C. § 651(b). To achieve this goal, Congress authorized the Secretary of Labor to promulgate and enforce occupational safety and health standards. U.S.C. §§ 655(a) (authorizing summary adoption of existing consensus and federal standards within two years of the Act's enactment), 655(b) (authorizing promulgation of standards pursuant to notice and comment), 654(b) (requiring employers to comply with OSHA standards.)

A safety or health standard is a standard ''which requires conditions, or the adoption or use of one or more practices, means, methods, operations, or processes, reasonably necessary or appropriate to provide safe or healthful employment or places of employment.'' 29 U.S.C. § 652(8).

A standard is reasonably necessary or appropriate within the meaning of Section 652(8) if it substantially reduces or eliminates significant risk, and is economically feasible, technologically feasible, cost effective, consistent with prior Agency action or supported by a reasoned justification for departing from prior Agency actions, supported by substantial evidence, and is better able to effectuate the Act's purposes than any national consensus standard it supersedes. See 58 FR 16612–16616 (March 30, 1993).

The Supreme Court has noted that a reasonable person would consider a fatality risk of 1/1000 to be a significant risk, and would consider a risk of one in one billion to be insignificant. *Industrial Union Department* v. *American Petroleum Institute,* 448 U.S. 607, 646 (1980) (the ''Benzene decision''). So a risk of 1/1000 (10^{-3}) represents the uppermost end of a million-fold range suggested by the Supreme Court, somewhere below which the boundary of acceptable versus unacceptable risk must fall. The Court further stated that ''while the Agency must support its findings that a certain level of risk exists with substantial evidence, we recognize that its determination that a particular level of risk is significant will be based largely on policy considerations.'' See, e.g., *International Union, UAW* v. *Pendergrass,* 878 F.2d 389 (D.C. Cir. 1989) (formaldehyde standard); *Building and Constr. Trades Department, AFL–CIO* v. *Brock,* 838 F.2d 1258, 1265 (D.C. Cir. 1988) (asbestos standard).

A standard is technologically feasible if the protective measures it requires already exist, can be brought into existence with available technology, or can be created with technology that can reasonably be expected to be developed. *American Textile Mfrs. Institute* v. *OSHA* 452 U.S. 490, 513 (1981) (''*ATMI*''), *American Iron and Steel Institute* v. *OSHA,* 939 F.2d 975, 980 (D.C. Cir 1991) (''*AISI*'').

A standard is economically feasible if industry can absorb or pass on the cost of compliance without threatening its long term profitability or competitive structure. See *ATMI,* 452 U.S. at 530 n. 55; *AISI,* 939 F. 2d at 980.

A standard is cost effective if the protective measures it requires are the least costly of the available alternatives that achieve the same level of protection. *ATMI,* 453 U.S. at 514 n. 32; *International Union, UAW* v. *OSHA,* 37 F. 3d 665, 668 (D.C. Cir. 1994) (''*LOTO III*'').

All standards must be highly protective. See 58 FR 16614–16615; *LOTO III,* 37 F. 3d at 668. However, health standards must also meet the ''feasibility mandate'' of Section 6(b)(5) of the Act, 29 U.S.C. 655(b)(5). Section 6(b)(5) requires OSHA to select ''the most protective standard consistent with feasibility'' that is needed to reduce significant risk when regulating health hazards. *ATMI,* 452 U.S. at 509.

Section 6(b)(5) also directs OSHA to base health standards on ''the best available evidence,'' including research, demonstrations, and experiments. 29 U.S.C. § 655(b)(5). OSHA shall consider ''in addition to the attainment of the highest degree of health and safety protection * * * the latest scientific data * * * feasibility and experience gained under this and other health and safety laws.'' *Id.*

Section 6(b)(7) of the Act authorizes OSHA to include among a standard's requirements labeling, monitoring, medical testing and other information gathering and transmittal provisions. 29 U.S.C. § 655(b)(7).

III. Events Leading to the Final Standard

The present OSHA standard for MC requires employers to ensure that employee exposure does not exceed 500 ppm as an 8-hour TWA, 1000 ppm as a ceiling concentration, and 2000 ppm as a maximum peak for a period not to exceed five minutes in any two hours (29 CFR 1910.1000, Table Z–2). This standard was adopted by OSHA in 1971 pursuant to section 6(a) of the OSH Act, 29 U.S.C. 655, from an existing Walsh-Healey Federal Standard. The source of this Walsh-Healey Standard [Ex. 7–1] was the American National Standards Institute (ANSI) standard for acceptable concentrations of MC (ANSI–Z37.23–1969), which was intended to protect workers from injury to the neurological system including loss of awareness and functional deficits linked to anesthetic and irritating properties of MC which had been observed from excessive, acute or large chronic exposures to MC in humans and experimental animals.

In 1946, the American Conference of Governmental Industrial Hygienists (ACGIH) recommended a Threshold Limit Value (TLV) of 500 ppm for MC [Ex. 2]. In 1975, the ACGIH lowered the

recommended TLV to 100 ppm [Ex. 7–11].

In March 1976, the National Institute for Occupational Safety and Health (NIOSH) published ''Criteria for a recommended standard for Methylene Chloride'' [Ex. 2], which recommended a reduction of occupational exposures to MC to 75 ppm as an 8-hour TWA, and a lower peak exposure not to exceed 500 ppm. Further exposure reduction based on the ambient level of carbon monoxide was also recommended.

In February 1985, the National Toxicology Program (NTP) reported the final results of animal studies indicating that MC is a potential cancer causing agent [Ex. 7–8]. Subsequently, the U.S. Environmental Protection Agency (EPA), upon receipt of the NTP studies, initiated a risk assessment evaluation to determine whether or not MC presents an unreasonable risk to human health or the environment and to determine if regulatory actions are needed to eliminate or reduce exposures.

On May 14, 1985, EPA announced its determination that MC was a probable human carcinogen. EPA classified MC as Group B2, in accordance with its interim guidelines for cancer risk (49 FR 46294), and hence announced the initiation of a 180-day priority review (50 FR 20126) under section 4(f) of the Toxic Substances Control Act (TSCA). In meeting its mandate under section 4(f) of TSCA to initiate a regulatory action, on October 17, 1985, EPA published an Advance Notice of Proposed Rulemaking (ANPR) (50 FR 42037) for the purpose of collecting the necessary information required for initiating a rulemaking. In this notice, EPA established December 16, 1985, as its deadline for receiving comments.

On April 11, 1985, the U.S. Consumer Product Safety Commission (CPSC) released its risk assessment findings for MC and began to consider a regulatory action to ban MC containing products and to develop a voluntary hazard communication program for consumers.

On December 18, 1985, the U.S. Food and Drug Administration (FDA) published a proposal to ban the use of MC as an ingredient in aerosol cosmetic products (50 FR 51551). This proposal was based on a risk assessment that used the NTP animal data.

On July 19, 1985, Owen Bieber, President of International Union, United Automobile, Aerospace and Agricultural Implement Workers of America (UAW), petitioned OSHA to act expeditiously on reducing workers' exposure to MC. Specifically, Mr. Bieber requested that OSHA: (1) Publish a hazard alert; (2) issue an emergency temporary standard (ETS); and (3) begin work on a new permanent standard for controlling MC exposure. Subsequently, the following unions joined UAW in petitioning OSHA to act on revising the current standard:

A. International Union, Allied Industrial Workers of America;
B. Glass, Pottery, Plastics and Allied Workers International Union;
C. United Furniture Workers of America;
D. The Newspaper Guild;
E. Communication Workers of America; and
F. United Steelworkers of America.

In March 1986, as a preliminary response to this petition, OSHA issued ''Guidelines for Controlling Exposure to Methylene Chloride.'' That document, which was canceled by OSHA Notice ADM 8 (July 12, 1994), provided information to employers and workers on risks of MC exposure and methods for controlling such exposure [Ex. 8–11].

In April 1986, NIOSH published a Current Intelligence Bulletin #46 (CIB) on MC reflecting the findings of the NTP study [Ex. 8–26]. The CIB concluded that MC should be regarded as a potential occupational carcinogen and that exposure should be controlled to the lowest feasible level.

On August 20, 1986, the CPSC issued a proposed rule [51 FR 29778] ''that would declare household products containing other than contaminant levels of MC to be hazardous substances.'' The CPSC noted the proposal was prompted by evidence that inhalation of MC vapor increased the incidence of various malignant and benign tumors in rats and mice. Accordingly, the Commission proposed to require that household products which can expose consumers to MC vapor be treated as hazardous substances and be labeled as provided by section 2(p)(1) of the Federal Hazardous Substances Act (FHSA) (15 U.S.C. 1261(p)(1)). The FHSA requires the use of labels which (1) indicate that exposure to a product may present a cancer risk; (2) explain the factors (such as level and duration of exposure) that control the degree of risk; and (3) explain the precautions to be taken.

On November 17, 1986, OSHA denied the petition for an Emergency Temporary Standard, but agreed that work on a permanent standard should commence [Ex. 3A]. On November 24, 1986, OSHA announced, in an Advance Notice of Proposed Rulemaking (ANPR) [51 FR 42257], that it was considering revision of the occupational health standard for MC. The Agency based this action on animal studies which indicated that the PEL of 500 ppm did not provide adequate protection against potential cancer risks and other adverse health effects. The ANPR summarized OSHA's information regarding the production and use of MC, occupational exposure to MC, and the potential adverse health effects associated with MC exposure. In addition, the notice invited interested parties to submit comments, recommendations, data, and information on a variety of issues related to the regulation of MC. OSHA received 43 comments in response to the ANPR. Those comments are discussed, as appropriate, below.

On December 5, 1986, the FDA reopened the comment period for 30 days on the above-cited proposal to ban the use of MC in cosmetic products [51 FR 43935]. The reopening enabled interested parties to submit comments on studies received after the close of the initial comment period regarding MC comparative pharmacokinetics, metabolism, and genotoxicity.

On September 14, 1987, the CPSC issued a statement of interpretation and enforcement policy, in lieu of continuing with rulemaking, which expressed the Commission's determination that consumer products containing MC and capable of exposing consumers to significant amounts of MC may pose cancer risk to humans and, therefore, are subject to the above-described hazardous substance labeling requirements. The CPSC explicitly retained the option of resuming the rulemaking if voluntary compliance with and enforcement of the Commission's interpretation did not adequately induce firms to label their products appropriately.

In 1988, based on the response to the ANPR, OSHA began contacting small businesses and conducting a number of site visits, to develop a clear understanding of how revisions to OSHA's MC standard would affect small entities. For example, on April 27, 1989, OSHA participated in a NIOSH conference on MC controls for the furniture stripping industry (54 FR 11811, March 22, 1989) to learn how that industry, which is dominated by small businesses, was dealing with MC exposure. That conference focused on the progress of a NIOSH pilot program aimed at developing affordable engineering controls for the furniture stripping industry. OSHA continued to seek input from small businesses throughout the MC rulemaking, as discussed below in the Preamble and in the Final Economic Analysis [Ex. 129].

Also, in 1988, ACGIH officially lowered the TLV for MC to 50 ppm as an 8-hour TWA. OSHA considered whether the TLV recommended by the

ACGIH would be an appropriate OSHA standard. The ACGIH is a professional society devoted to administrative and technical aspects of occupational and environmental health. Voting members of ACGIH are scientists who work for government agencies or educational institutions. Every year the ACGIH adopts new or revised TLVs for several substances by a majority vote, not by consensus. OSHA has not adopted the MC TLV (50 ppm) as the 8-hour TWA PEL because the Agency's criteria for setting standards differ from those used by the ACGIH. OSHA standards must eliminate significant risks to the extent feasible, whereas the ACGIH sets limits under which it is believed that nearly all workers may be repeatedly exposed day after day without adverse health effects. Also, as evidenced by their ''Documentation of the TLVs,'' the ACGIH does not perform quantitative risk assessments. This difference between OSHA and ACGIH practice is critical because the Supreme Court has required OSHA to perform quantitative risk assessments when data permit, and to use these assessments to set exposure limits.

On June 29, 1989, the FDA issued a final rule that banned the use of MC in cosmetic products [54 FR 27328]. The Agency based its final rule on scientific studies that showed inhalation of MC caused cancer in laboratory animals. The FDA concluded, accordingly, ''that continued use of MC in cosmetic products may pose a significant risk to human health * * * '' The Agency considered comments and information regarding the application of a physiologically-based pharmacokinetic model to the prediction of human cancer risk. The FDA determined that the risk assessment developed using animal studies should not be changed to reflect the ''pharmacokinetic and metabolic data and hypothesized GST metabolic mechanism of carcinogenicity.''

On August 8, 1990, the Consumer Product Safety Commission (CPSC) issued a General Order (55 FR 32282) that required manufacturers, importers, packagers and private labelers of consumer products containing 1% or more of MC to report to the CPSC information on the labeling and marketing of those products. The CPSC indicated that the information obtained would aid the Commission in evaluating the CPSC's policy concerning the labeling of MC-containing products as hazardous substances, pursuant to the Federal Hazardous Substances Act.

On November 11, 1990, then-President Bush signed the Clean Air Act Amendments (CAAA) of 1990. Title VI of the CAAA requires the phaseout of ozone-depleting chemicals by the year 2000 (section 604) and requires the EPA to determine which alternatives to ozone-depleting chemicals are safe for use (section 612). MC was among the potential substitutes studied by the EPA. In addition, section 112 of the CAAA requires the EPA to address the residual risks of MC and other specified Hazardous Air Pollutants (HAPs) by establishing Maximum Achievable Control Technology (MACT) standards. In particular, section 112(d) requires EPA to promulgate National Emission Standards for Hazardous Air Pollutants (NESHAP) (40 CFR part 63) over a 10-year period. In addition, EPA regulates MC as a priority pollutant under the Clean Water Act as amended (33 U.S.C. 1251, *et seq.*)

On February 12–13, 1991, EPA convened an international conference on ''Reducing Risk in Paint Stripping'' that was well attended by representatives of small businesses which use MC or its substitutes in a wide range of operations. OSHA actively participated in the workgroup and panel discussions to elicit information regarding the anticipated impacts of a revised MC standard on paint stripping operations.

OSHA determined, based on animal and human data, that the existing PELs for MC did not adequately protect employee health. Accordingly, on November 7, 1991, OSHA issued a notice of proposed rulemaking (NPRM) (56 FR 57036) to address the significant risks of MC-induced health effects. The proposed rule required employers to reduce occupational exposure to MC and to institute ancillary measures, such as employee training and medical surveillance, for further protection of MC-exposed workers. The provisions of the proposed rule are discussed in detail in the Summary and Explanation, Section X, below. The Agency published a correction notice on January 6, 1992 (57 FR 387). The NPRM solicited comments on the proposed rule and raised 48 specific issues to elicit information about MC health effects, use, and exposure controls, as well as input regarding the appropriateness and impacts of particular provisions. The written comment period, which ended on April 6, 1992, produced 58 comments, including several hearing requests.

On February 11, 1992, then-President Bush announced an accelerated phaseout schedule for ozone depleting substances and ordered the EPA to accelerate its review of substitutes (such as MC) whose use would reduce damage to the ozone layer.

On May 19, 1992, OSHA presented the MC proposal to the newly reconstituted Advisory Committee on Construction Safety and Health (ACCSH) for consultation. The Advisory Committee established a MC work group to generate information and recommendations regarding MC use and exposure in the construction industry.

In response to the hearing requests and to concerns raised by commenters, the Agency issued a notice of informal public hearing (57 FR 24438, June 9, 1992), which scheduled hearings to start in Washington, D.C. on September 16, 1992 and in San Francisco, California on October 14, 1992. That notice also reopened the written comment period until August 24, 1992. The hearing notice raised 16 issues, based on the NPRM comments, which solicited input regarding the human health risks of MC exposure and the impact of the proposed rule on MC users. San Francisco was selected as a hearing site to facilitate participation by small businesses, particularly foam blowers and furniture refinishers, for whom attendance at the Washington, D.C. hearing would have been economically burdensome.

On July 28, 1992, the MC work group's report was presented to the ACCSH and was adopted as the Advisory Committee's recommendation to OSHA. Based on the input from the ACCSH, OSHA issued a supplemental hearing notice (57 FR 36964, August 17, 1992) which raised MC use, exposure and control issues specific to the construction industry. The supplemental notice extended the deadline for submission of comments regarding the construction issues until September 22, 1992.

OSHA convened public hearings in Washington, D.C. on September 16–24, 1992 and in San Francisco on October 14–16, 1992, with Administrative Law Judge James Guill presiding. At the conclusion of the hearings, Judge Guill set a post hearing period for the submission of additional data, which ended on January 14, 1993, and for the submission of additional briefs, arguments and summations, which ended on March 15, 1993. The posthearing comment period elicited 35 comments.

On March 31, 1993, pursuant to section 112 of the CAAA, the EPA issued a notice (58 FR 16808) requesting information on the anticipated impacts of a National Emission Standard for Hazardous Air Pollutants (NESHAP) for the halogenated solvent cleaning-vapor degreasing source category. This notice characterized MC as the third most commonly used halogenated solvent,

based on 1991 data. On November 29, 1993, the EPA issued a notice of proposed rulemaking (58 FR 62566) describing MACT rules for the use of MC and other HAPs in halogenated solvent cleaning-vapor degreasing operations.

On March 11, 1994, OSHA reopened the rulemaking record for 45 days (59 FR 11567) to receive public comment on reports related to engineering controls for MC exposure in the furniture refinishing industry, MC carcinogenicity, and the availability of water-based substitutes for MC-based adhesives in the manufacture of flexible foam products. In particular, OSHA solicited input regarding the extent to which it was feasible for small businesses with furniture stripping operations to comply with the proposed PELs using engineering controls addressed in an OSHA contractor's report [Ex. 114]. The limited reopening, which ended on April 25, 1994, elicited 29 comments.

OSHA has evaluated the impact of the final rule on the identified application groups (except for farm equipment [Ex. 115–23], insofar as this rulemaking does not address agricultural employment). The Agency's analysis and conclusions are presented in the Final Economic Assessment for this rulemaking [Ex.129], summarized in Section VIII, below.

On March 18, 1994, the EPA issued a final rule (59 FR 13044) which addressed the use of MC as a substitute for ozone-depleting chemicals being phased out under section 612 of the CAAA of 1990. The EPA has found the use of MC to be acceptable in the production of flexible polyurethane foam; polyurethane integral skin foams; metal cleaning; electronics cleaning; precision cleaning; and adhesives, coatings and inks. That Agency expressed concern regarding MC toxicity, stating ''methylene chloride use will be subject to future controls for hazardous air pollutants under Title III section 112 of the CAA. In addition, use of the compound must conform to all relevant workplace safety standards * * * Use is also subject to waste disposal requirements under RCRA (59 FR at 13088).'' The EPA also noted that it is encouraging companies to decrease emissions of MC through the ''30/50'' pollution prevention program, under which companies voluntarily commit to reduce emissions 33 percent by the end of 1992 and 50 percent by the end of 1995 (59 FR at 13093).

On April 21, 1994, the Department of Housing and Urban Development (HUD) issued a notice (59 FR 19084) announcing that funds were available for the removal of lead-based paint. That notice explicitly provided that paint removal activities funded by HUD could not use products containing MC.

On May 31, 1994, Judge Guill closed and certified the hearing record for OSHA's MC rulemaking.

Pursuant to section 112(d) of the CAAA, the EPA has already finalized NESHAP rulemakings that cover halogenated solvent cleaning (59 FR 61801, December 4, 1994, 40 CFR part 63, subpart T), aerospace manufacture and rework facilities (September 1, 1995, 40 CFR part 63, subpart) and wood furniture manufacturing (60 FR 62930, December 7, 1995, 40 CFR part 63, subpart JJ). MC-related NESHAP proceedings for several industries (e.g., pharmaceuticals, flexible polyurethane foam, polycarbonates and nylon 6 are currently underway.

Pursuant to its CAAA, CWA, RCRA and PPA mandates, EPA has proposed effluent limitation guidelines for the pharmaceutical industry (60 FR 21592, May 2, 1995) which characterize MC as one of the most significant priority pollutants to be addressed under the CWA. In particular, EPA has addressed the use of stream stripping and distillation technology to recover MC from wastewater for reuse or sale for use in other industries. That Agency has also proposed requirements for compliance monitoring of MC that, due to dilution with wastewater, would be found at levels below current analytical limits of detection.

OSHA has attempted to consider the foreseeable impact of EPA action on the use of MC because EPA-driven changes in such use would affect the data on which OSHA relies to estimate the impact of this final rule. In brief, while EPA action to reduce HAP exposure may encourage employers to reduce or eliminate MC use, simultaneous EPA efforts to reduce the emission of ozone-depleting chemicals may encourage employers to maintain or increase MC use. Given the time frame for EPA action and that Agency's need to coordinate proceedings that arise from several statutory mandates, it is inappropriate to draw conclusions regarding the impact of EPA regulatory action on the need for OSHA action.

OSHA has also consulted with EPA to determine whether any potential overlapping or conflicting requirements exist in OSHA's MC standard and various EPA NESHAPs, and has committed to continue working with EPA on future NESHAP compliance issues. OSHA discussed the MC regulation with project officers for all recent, current and planned NESHAPs projects and has determined that there are no overlapping or conflicting requirements in the NESHAPs and OSHA's MC standard. Indeed, employers can choose among a variety of means to comply which would not entail any conflict in OSHA and EPA regulations.

In particular, OSHA conducted a thorough analysis of the EPA Solvent Degreasing NESHAP. OSHA determined, and EPA agreed, that there are no conflicting requirements in the two regulations. OSHA does not require or recommend specific compliance strategies. One common method of reducing worker exposure is local exhaust ventilation. In addition, some of the alternative compliance strategies suggested in the EPA solvent degreasing NESHAP include reducing room draft. OSHA has determined that even if an employer chooses reducing room draft as its compliance strategy for the EPA NESHAP, employers may use some local exhaust ventilation to reduce worker MC exposures and still be in compliance with both the OSHA MC standard and the EPA NESHAP. There are also other combinations of compliance strategies that can be utilized to comply with both regulations. OSHA plans further discussion of this issue in its compliance assistance documents. The purpose of these documents is to assist employers in selecting among the many appropriate control strategies which satisfy requirements under both OSHA and EPA regulations.

On October 25, 1995, OSHA reopened the rulemaking record (60 FR 54462) to obtain input regarding studies submitted by the Halogenated Solvents Industry Alliance (HSIA) [Ex. 118–125] which address the use of animal data to estimate human cancer risk from MC exposure. The comments received on those studies [Exs. 126–1 through 126–37] are discussed in relation to the Quantitative Risk Assessment (Section VI), below.

The rulemaking record contains 129 exhibits, and 2717 pages of hearing transcript. A wide range of employees, employers, union representatives, trade associations, government agencies and other interested parties contributed to the development of the rulemaking record. The Agency appreciates these efforts to help OSHA develop a record that provides a sound basis for the promulgation of this final rule.

Throughout the ten years since OSHA initiated MC proceedings, the Agency has sought and evaluated input regarding the anticipated impact of a MC health standard on small entities. For example, Issue K of OSHA's Advance Notice of Proposed

Rulemaking for MC (ANPRM) (51 FR 42257, November 24, 1986) solicited comments, recommendations, data and information regarding the anticipated impacts of a MC standard on small entities. Responses from manufacturers of flexible polyurethane foam [Exs. 10–4 and 10–17] and industrial paint removers [Ex. 10–7] indicated that rulemaking regarding MC would affect small entities. Based on the response to the ANPRM, OSHA initiated contacts with small businesses and conducted a number of site visits, to develop a clear understanding of how revisions to OSHA's MC standard would affect small entities.

Based on OSHA's contacts with small business and the response to the ANPRM, the Preliminary Regulatory Impact Analysis (PRIA) for the MC NPRM (56 FR 57036, November 7, 1991) considered small firms to be those with fewer than 20 total employees. In addition, the PRIA estimated that 45 percent of establishments using MC were ''small businesses.''

Issue 25 of the NPRM for MC stated that OSHA had analyzed the impacts of the proposed rule on small businesses and had adapted the standard to take into account the circumstances of small businesses, where appropriate. The performance-oriented language covering the demarcation of regulated areas (proposed paragraph (e)(4)) and the 30/10 days of exposure thresholds for medical surveillance (proposed paragraph (i)(1)(i)) reflected the Agency's determination to avoid imposing unnecessary burdens on small entities. In addition, Issue 25 solicited information regarding anticipated small business impacts so that OSHA could update the initial regulatory flexibility analysis performed pursuant to 5 U.S.C. 604 of the Regulatory Flexibility Act.

Small businesses, particularly in the furniture refinishing [Exs. 19–1, 19–4, 19–6, 19–8, 19–10 and 19–11] and polyurethane foam blowing industries [Ex. 19–3], expressed concern that the proposed rule would impose excessive compliance burdens on their operations. Based in part on these concerns, the Agency convened informal public hearings (57 FR 24438, June 9, 1992) in Washington, D.C. and San Francisco, CA. San Francisco was selected as a hearing site to facilitate participation by small businesses, particularly foam blowers and furniture refinishers, for whom attendance at the Washington, D.C. hearing would have been economically burdensome.

Hearing Notice Issue 8 solicited comments and testimony, with supporting documentation, regarding the impact of the proposed rule on small businesses, particularly in the furniture refinishing sector. A significant number of small businesses participated in the Washington, D.C. and San Francisco hearings, providing OSHA with useful testimony and posthearing submissions. For example, Harold Markey of the Markey Restoration Company proposed [Tr. 2660, 2672, 10/16/92] that ''furniture refinishing businesses be exempt from [25 ppm PEL] due to the financial hardship that enforcement would cause.'' In addition, Mr. Markey expressed appreciation for OSHA's efforts to facilitate his participation in the hearing. As discussed above, OSHA subsequently solicited (59 FR 11567, March 11, 1994) additional input regarding the extent to which it was feasible for small businesses with furniture stripping operations to comply with the proposed PELs using the engineering controls addressed in an OSHA contractor's report [Ex. 114].

OSHA has had numerous contacts with furniture refinishers, particularly with members of the National Association of Furniture Refinishers and Refurbishers (NAFRR), the trade association for the industry. In 1994, OSHA was represented at the NAFRR's annual conference in Williamsburg, VA. The Agency has continued to provide assistance to NAFRR members and other furniture refinishers regarding appropriate industrial hygiene measures for workplaces where MC is used. For example, OSHA has disseminated information about the engineering controls developed by NIOSH for the furniture stripping industry. OSHA will continue to strive for a cooperative relationship with the small businesses affected by the MC final rule through careful compliance with the Small Business Regulatory Enforcement Fairness Act (SBREFA) (5 U.S.C. Chapter 8) and the Regulatory Flexibility Act (5 U.S.C. 601, *et seq.*), as amended. In addition, the Agency's ''Outreach Program'' for the MC final rule will involve a commitment of significant consultation and other resources by OSHA and other concerned parties, building on the relationships established during the rulemaking.

OSHA has developed a multifaceted outreach plan to provide information and compliance assistance to the regulated community. In particular, OSHA:

—Has developed a booklet which summarizes the provisions of the MC standard;
—Has developed a compliance directive for the MC standard which answers compliance-related questions about the MC standard;
—Is developing compliance guides directed at assisting small businesses in complying with the MC standard, consistent with section 212 of the Small Business Regulatory Enforcement Fairness Act of 1996;
—Has recruited interested trade associations to assist in the distribution of MC standard-related information, and the convening of workshops to help small businesses understand available compliance strategies;
—Has spoken to trade association meetings and distributed MC standard-related materials;
—Has contacted manufacturers of MC to develop a strategy for inclusion of OSHA MC-standard information in existing product stewardship programs; and
—Is working with individuals interested in conducting workshops for impacted industries, such as polyurethane foam manufacturers and furniture refinishers, to train small businesses on compliance with OSHA and EPA regulations.

All 50 states and the territories covered by the OSH Act provide free consultation services for small businesses to assist them in achieving compliance with OSHA standards. Those services are funded by federal OSHA but supplied by the states in state plan states and by private contractors in other areas. Those consultation services will provide free assistance for small business so it will be easier to come into compliance with the MC standard.

OSHA will also set up Cooperative Assessment Programs (CAP's) for individual employers to assist them in achieving compliance in a reasonable manner. In a CAP, an OSHA industrial hygienist works with the employer and employee representatives, to determine a reasonable number of cost-effective engineering controls and work practices to bring the employer into compliance. A reasonable schedule is determined for the implementation of those controls. Good faith efforts to implement a CAP are generally considered to be in compliance with the provisions of the standard. OSHA has had success in implementing CAP's for the arsenic, lead and other standards. Employers have found that working with OSHA or CAP's has led to cost effective compliance with OSHA standards.

IV. Chemical Identification

Methylene chloride (MC), also called dichloromethane (DCM) [Chemical Abstracts Service Registry Number 75–09–2] is a halogenated aliphatic hydrocarbon with a chemical formula of CH_2Cl_2, a molecular weight of 84.9, a

boiling point of 39.8°C (104°F) at 760 mm Hg, a specific gravity of 1.3, a vapor density of 2.9 and a vapor pressure of 350 mm Hg at 20°C (68°F). Concentration of MC in saturated air at 25°C reaches 550,000 ppm. MC has low water solubility (1.3 gm per 100 gm of water at 20°C), an extensive oil and fat solubility, and a low flammability potential. It is used as a flame suppressant in solvent mixtures (lower explosive limit of 12% and upper explosive limit of 19%). It is a colorless volatile liquid with a chloroform-like odor and its odor threshold varies between 100 and 300 ppm. Contact with strong oxidizers, caustics and active metal powder may cause explosions and fires. Decomposition products during combustion or fire include phosgene, hydrogen chloride and carbon monoxide.

V. Health Effects

A. Introduction

The toxicology of MC is summarized below. A more detailed review of MC toxicology can be found in the NPRM [56 FR 57036].

B. Absorption and Disposition of Methylene Chloride

Inhalation is the most significant route of entry for MC in occupational settings. The quantity of MC taken into the body depends on the concentration of MC in inspired air, the breathing rate, the duration of exposure to MC, and the solubility of MC in blood and tissues. Because MC is volatile, inhalation exposures to MC can be quite high, especially in poorly ventilated spaces.

Dermal absorption of MC is a slow process relative to inhalation. In the NPRM, OSHA described the rate of skin absorption of pure MC as insignificant relative to inhalation. In contrast, Mr. Harvey Clewell, in comments prepared for the U.S. Navy [Ex. 19–59], stated that substantial occupational exposure could occur through the dermal route when the employee is exposed to high concentrations of MC vapor and protective clothing is not worn [Ex. 19–59]. Mr. Clewell provided a physiologically-based pharmacokinetic (PBPK) model to describe the potential absorption through skin exposed to high vapor concentrations of MC. Where the employee is protected from inhalation exposure by use of an air-supplied respirator and the skin (exposed surface area = two hands) is unprotected in high MC-vapor concentrations, the primary route of exposure in this case will be dermal exposure. Mr. Clewell has determined that sufficient MC may be absorbed by the dermal route over an 8-hour shift to give an internal concentration which would exceed that experienced by workers exposed to MC through inhalation of 25 ppm for 8 hours.

In the NPRM, OSHA also indicated that the burning sensation associated with dermal exposure to liquid MC would likely lead employers and employees to limit skin absorption. However, exposure to high concentrations of vapor may not be associated with a burning sensation, and there is evidence in the record [Tr. 2468–70, 10/15/92] to suggest that employees are exposed to liquid MC without protective clothing. OSHA believes that dermal exposure to liquid and high vapor concentrations of MC should be limited to the extent feasible to protect the employee from overexposure. For this reason, in this standard OSHA has required that employers provide personal protective clothing and equipment appropriate to the hazard. For example, if an employee will be at risk of hand contact with liquid MC, impermeable gloves must be provided.

C. Metabolism of MC

Once MC is absorbed into the body, it is widely distributed in the body fluids and in various tissues. The uptake and elimination of MC has been well described in human and animal studies [Exs. 7–156, 7–157, 7–174].

The carcinogenic mechanism of action for MC has not been clearly established. Although it has not been proven whether MC is carcinogenic through a genotoxic or non-genotoxic mechanism, current evidence supports the hypothesis that MC is a genotoxic carcinogen. Genotoxic carcinogens typically are reactive compounds or metabolized to reactive compounds. MC is unreactive in the body until it is metabolized. Therefore, many investigators believe that one or more of the metabolites of MC, and not MC itself, is the ultimate carcinogen.

It has been established by Kubic and Anders [Ex. 7–167] and Ahmed and Anders [Ex. 7–25] that MC is metabolized by rat liver enzymes *in vitro* by two distinct pathways. The first pathway is the mixed function oxidase system (MFO pathway) associated with the microsomal cell fraction and the second is the glutathione dependent pathway localized primarily in the cytoplasm and mediated by glutathione-S-transferase (GST pathway). The metabolism of MC is illustrated in Figure 1.

BILLING CODE 4510–26–P

Metabolism of Methylene Chloride

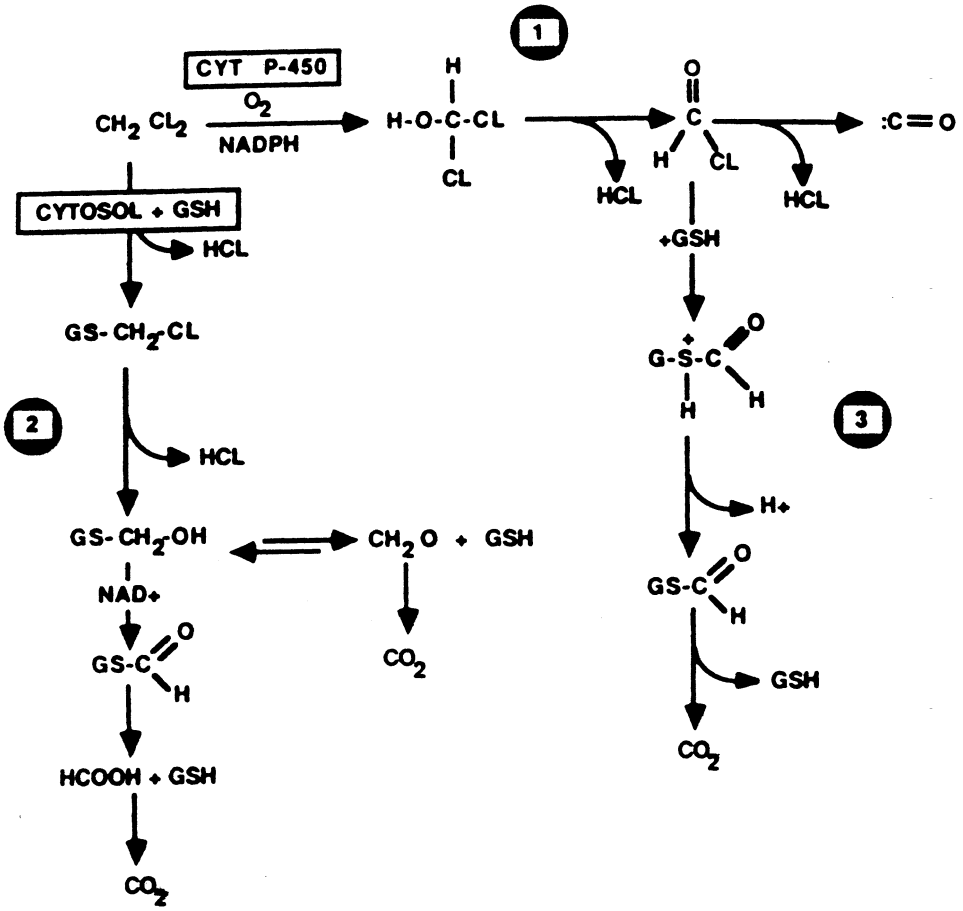

Figure V-1. Proposed metabolic pathways for methylene chloride metabolism. (Adapted from Andersen et al. (1987) [Ex. 7-125]

BILLING CODE 4510–26–C

The MFO pathway metabolizes MC via a cytochrome-P450 dependent oxidative dehalogenation [Ex. 7–167] which produces formyl chloride. The formyl chloride decomposes to give chloride ion and carbon monoxide. It has been postulated that if the MFO pathway contributes to the carcinogenicity of MC, it is through the production of the reactive compound, formyl chloride. The end product of the MFO pathway, carbon monoxide, can be detected in the blood and breath of humans and animals exposed to MC, and has been used as a surrogate measure of MC exposure in humans.

The GST pathway metabolizes MC to formaldehyde and chloride ions via a postulated S-chloromethylglutathione conjugate [Ex. 7–25]. Formaldehyde is further metabolized to carbon dioxide in mammalian systems. Potential reactive metabolites in this pathway are the S-chloromethylglutathione conjugate and formaldehyde (known to react with protein, RNA and DNA).

Animal data indicate that the MFO pathway is saturated at ambient concentrations less than 500 ppm, while the GST pathway remains linear throughout the exposure levels examined [Exs. 7–161, 7–171]. Saturation of the MFO pathway in humans has been estimated to occur at a level which is within the range of the animal data (estimates range from 200 to 1000 ppm MC) [Exs. 7–114, 7–115, 8–32]. The GST pathway is not thought to be saturated for any of the species investigated at doses up to 4000 ppm.

D. Carcinogenicity

The evidence for the carcinogenicity of MC has been derived from mutagenicity studies, animal bioassays and human epidemiological studies. OSHA analyzed data from each of these sources in determining that MC is carcinogenic to test animals and a potential occupational carcinogen. The evidence that OSHA evaluated in making this determination is summarized below. Additional evidence pertaining to the hazard identification of MC is discussed in the Quantitative Risk Assessment, Section VI, below.

1. Mutagenicity Studies

Mutagenicity and genotoxicity studies are useful in describing the possible carcinogenic mechanism of action of MC. Evidence for the interaction of MC or MC metabolites with DNA (producing mutations or toxicity) is consistent with a genotoxic mechanism for the carcinogenic action of MC, rather than a non-genotoxic action (i.e., by acting as a promoter, increasing cell turnover). The EPA reviewed the literature on the mutagenic potential of MC in their ''Health Assessment Document for Dichloromethane (Methylene Chloride)'' (HAD) [Ex. 4–5] and studies conducted by ECETOC in the ''Technical Analysis of New Methods and Data Regarding Dichloromethane Hazard Assessments'' [Ex. 7–129].

As described in the MC Notice of Proposed Rulemaking (56 FR 57036), the documentation of positive responses in the production of mutations in bacteria, yeast and Drosophila, chromosomal aberrations in CHO cells and sister chromatid exchanges (SCE) in CHO and V79 cells and equivocal responses in other systems indicated the potential genotoxicity of MC.

A paper submitted to the record by Dr. Trevor Green [Ex. L–107], for the Halogenated Solvents Industry Alliance (HSIA), investigated the role of metabolites of the GST pathway in the bacterial mutagenicity of MC. The authors of this study found that in glutathione-deficient strains of *Salmonella typhimurium* there was approximately a two-fold decrease in mutations. Mutation rates returned to normal when bacteria were supplemented with exogenous glutathione. They also investigated whether individual metabolites in the GST pathway were likely to be responsible for mutagenesis. Experiments in S. typhimurium strains were consistent with the S-chloromethylglutathione conjugate as the mutagenic moiety. Experiments in *Escherichia coli* strains implicated formaldehyde as the active mutagen. Overall, these results support the hypothesis that MC may act as a genotoxic carcinogen, but the ultimate reactive species still remains to be identified.

Dillon et al. [Ex. 21–89] also conducted experiments on the mechanism of MC mutagenicity in bacterial cells, using wild type and glutathione-deficient *Salmonella typhimurium* TA100. Dose-related increases in mutagenicity were observed with and without metabolic (cytosolic or microsomal) activation. The authors characterized the mutagenicity as marginally highest in the presence of cytosol at the highest MC concentrations. The glutathione-deficient strain was slightly less responsive to MC-induced mutation than the wild type. In contrast to the study by Green, Dillon et al. found that MC mutagenicity was not appreciably enhance by the addition of microsomal or cytosolic liver fractions or exogenous glutathione. They concluded that it was not clear to what extent, if any, glutathione was involved in MC mutagenicity, and noted that ''* * * the residual glutathione present in the glutathione-deficient strain may have been sufficient to facilitate the mutagenic responses observed.''

The differing results in these studies suggest that the exact mechanism of MC mutagenicity, even in bacterial cells, has not been determined with certainty. However, OSHA has concluded that the evidence that MC is genotoxic is compelling. Additional studies supporting classification of MC as a genotoxin were submitted to the Agency in late 1995 and are discussed in the Quantitative Risk Assessment, Section VI, below.

2. Animal Studies

The evidence for the carcinogenicity of MC has been derived primarily from data obtained in chronic toxicity studies in rodents. Table V–1 contains a summary of the major bioassays. These bioassays have been conducted in three rodent species (rat, mouse and hamster) using two routes of administration (oral and inhalation) and a wide range of doses (from 5 mg/kg/d, oral to 4000 ppm inhaled for 6 hr/d, 5 d/wk).

The National Toxicology Program conducted two 2-year inhalation bioassays [Ex. 7–8] using B6C3F1 mice and Fischer 344 rats. In the NTP mouse study [Ex. 7–8], groups of 50 male and 50 female B6C3F1 mice were exposed to 0, 2000 or 4000 ppm MC, 6 hr/day, 5 d/wk for 102 weeks. All animals were necropsied and examined histopathologically.

Treated male and female mice had increased incidences of alveolar or bronchiolar adenomas and carcinomas as compared with control animals. In addition, there was an increased number of lung tumors per tumor-bearing animal (multiplicity of tumors) with increasing dose of MC.

In the liver, the toxic effects of MC were expressed as cytologic degeneration in male and female mice which was not present in the controls. An increased incidence of hepatocellular adenomas and carcinomas (combined) was observed in male mice. The incidence of hepatocellular carcinomas in male mice was statistically significantly increased at 4000 ppm. Female mice also experienced dose-related increases in the incidences of hepatocellular adenomas and carcinomas. An increased multiplicity of liver tumors was also found in both male and female mice.

TABLE V–1.—METHYLENE CHLORIDE LIFETIME BIOASSAYS

Reference	Species/strain	Route and dosing schedule	Dosage (No. of animals)	Comments
NTP (1985)	$B6C3F_1$ mouse	Inhalation 6 hr/day, 5 days/week.	0, 2000, 4000 ppm (50 mice/ sex/ dose).	Lung and liver tumors both sexes, both doses.
Serota (NCA) (1986).	$B6C3F_1$ mouse	Daily in water	0 (125M, 100F), 60 (200M, 100F), 125 (100M, 50F), 185 (100M, 50F), and 250 (125M, 50F) mg/kg/d.	No tumors observed.
NTP (1985)	Fischer 344 rat	Inhalation 6 hr/day, 5 days/week.	0, 1000, 2000 and 4000 ppm (50 rats/sex/dose).	Mammary and integumentary fibromas and fibrosarcomas in both sexes.
Burek (DOW) (1980).	Sprague-Dawley rat	Inhalation 6 hr/day, 5 days/week.	0, 500, 1500 and 3500 ppm (95 rats/sex/dose).	Malignant salivary gland tumors at 3500 ppm, dose-related increase in mammary tumors.
Nitschke (DOW) (1982).	Sprague-Dawley rat	Inhalation 6 hr/day, 5 days/week.	0, 50, 200 and 500 ppm (70 rats/ sex/dose.	No tumors observed.
Serota (NCA) (1986).	Fischer 344 rat	Daily in water	0, 5, 50, 125 and 250 mg/kg/d (135/sex at 0, 85/sex/dose).	No tumors observed.
Burek (DOW) (1980).	Syrian Golden hamster	Inhalation 6 hr/day, 5 days/week.	0, 500, 1500, 3500 ppm (90 hamsters/sex/ dose).	No tumors observed.

The dose-related increase in the incidence of lung and liver tumors in mice, and the increased multiplicity of these tumors, present the strongest evidence for the carcinogenicity of MC. NTP concluded that, based on the evidence from these lung and liver tumors, there was clear evidence of the carcinogenicity of MC in both male and female mice.

In a second two-year bioassay, the NTP examined the effects of inhalation of MC at 0, 1000, 2000 and 4000 ppm in F344 rats [Ex. 7–8]. Body weights of all exposure groups were comparable. The highest dose female rats experienced reduced survival after 100 weeks of exposure.

The incidence of mammary tumors in the high dose group in both sexes was statistically significantly higher than in control animals (concurrent and historical). The incidence of mammary fibroadenomas alone and the combined incidence of fibroadenomas and adenomas in male and female rats occurred with statistically significant positive trends. When subcutaneous fibromas or sarcomas in the male rat, which were believed to have originated in the mammary chain, were included in comparisons, differences between control and exposed animals were even greater.

MC-exposed male and female rats also showed increased incidence of liver effects, characterized by hemosiderosis, hepatocytomegaly, cytoplasmic vacuolization and necrosis. Neoplastic nodules alone and combined incidence of neoplastic nodules and hepatocellular carcinomas in female rats occurred with significant positive trends by the life table test. Pair-wise comparisons did not indicate statistically significant effects at any one dose. Although this is suggestive of a carcinogenic response in the female rat liver, NTP did not use this response in their determination of the carcinogenicity of MC.

NTP based its determination of the carcinogenicity of MC in the rat on the mammary tumor incidence data. NTP has concluded that the increased incidences of mammary gland tumors in the female rats provided clear evidence of carcinogenicity and, in the male rats, some evidence of carcinogenicity.

The Dow Chemical Company [Ex. 7–151] conducted experiments in which Sprague-Dawley rats and Syrian Golden hamsters were exposed to 0, 50, 1500 or 3500 ppm MC, 6 hr/d, 5 d/wk for 2 years. A dose-related statistically-significant increase in the number of mammary tumors per tumor-bearing female rat was observed. These results support the NTP findings of increased mammary tumors in F344 rats. The background mammary tumor response in the Sprague-Dawley rat is higher than in F344 rats, so a quantitative analysis of risk is easier to perform on the data from the NTP study.

A statistically significant increase in male rat salivary tumors was also observed in this study, although the authors believed that this response should be discounted because of the presence of sialodacryoadenitis virus in the rats. OSHA believes that the presence of this virus in the rats would complicate the interpretation of the data, and so has relied on the NTP studies for its quantitative risk assessments.

No statistically significant excess incidence of tumors was observed in either sex of hamsters at any exposure level. This suggests that hamsters are less sensitive to the carcinogenic effects of MC than either mice or rats. Metabolism data gathered in hamsters indicate that hamsters have less capability to metabolize MC by the GST pathway than rats or hamsters (or humans). This correlation between lack of GST metabolism capacity and lack of tumor response supports the hypothesis that GST metabolism is important in MC carcinogenesis and also indicates that it would not be protective to use the hamster response to MC as the basis for a carcinogenic risk assessment.

A second inhalation study in Sprague-Dawley rats conducted by investigators at Dow Chemical [Ex. 7–173], with exposures up to 500 ppm, showed an increase in the number of mammary tumors per tumor-bearing animal in female rats at the highest dose level only. This study extended the finding of excess mammary tumors in rats to the 500 ppm level. However, because of the high background rates of mammary tumors in Sprague-Dawley rats, the NTP study showed a clearer dose-response relationship between MC exposure and incidence of mammary tumors.

In a study conducted for the National Coffee Association [Ex. 7–180], no statistically significant increased incidence of tumors was observed in B6C3F1 mice or F344 rats exposed to up to 250 mg/kg/d MC in drinking water. These studies used the drinking water route of exposure instead of inhalation and exposed animals to lower doses (on an mg/kg/d basis) than the NTP and high-dose Dow studies. These factors most likely accounted for the lack of a positive tumor response. The NCA studies were used by Reitz et al. in the development of the physiologically-

based pharmacokinetic models for MC. Specifically, these studies helped to determine that the lack of tumor development was consistent with model predictions of the amount of GST metabolites in lung and liver of mice and that the MFO pathway was most likely not primarily responsible for the mouse tumor response.

The Agency believes that the NTP studies show the clearest evidence of a carcinogenic effect of MC and has used these studies as the basis of its risk assessment for the following reasons: (1) The studies were well conducted and underwent extensive peer review. (2) The inhalation route of exposure was used, which is the most appropriate route for extrapolation to occupational exposures. (3) Dose-related, statistically significant increases in tumor incidence were observed in both sexes in mice and in female rats. OSHA believes that because of the clear tumor response, and quality of the studies, the NTP studies provide the best data for quantitative cancer risk assessment. OSHA concludes from these studies that MC causes cancer in two species of test animals by the inhalation route, and that a clear dose-response has been demonstrated.

3. Epidemiological Studies

Epidemiological studies of occupational exposure to MC have been conducted in the manufacturing of triacetate fibers, photographic film production, and the manufacturing of paint and varnish. Those studies were reviewed by OSHA in the preamble to the proposed rule [56 FR 57075] and are summarized and updated in this document. In addition, an epidemiological study of MC exposure and astrocytic brain cancer is reviewed in this text.

a. Studies of triacetate fiber production workers. Ott et al. [Ex. 7–76] performed a retrospective cohort study using a cellulose diacetate and triacetate plant in Rock Hill, South Carolina to examine the effects of MC on a working population. In particular, Ott et al. evaluated the effects that were possibly mediated through the metabolism of MC to carboxyhemoglobin. Employees at this plant had MC exposures close to OSHA's time weighted average (TWA) permissible exposure limit (PEL) of 500 ppm. Ott et al. used workers in a plant in Narrows, Virginia as a comparison population because it had operations similar to those at the Rock Hill plant, but did not use MC. In this study, Ott et al. compared the number of deaths within the exposed cohort with the United States population and the Narrows, Virginia referent group. Ott et al. observed that the overall mortality of the cohort was comparable to that of the age, sex, and race-matched U.S. population. Comparing exposed and referent cohorts, statistical differences in risk were observed in white men for ''all causes'' (risk ratio=2.2, $p<0.01$), ''diseases of the circulatory system'' (risk ratio=2.2, $p<0.5$), and ''ischemic heart disease'' (risk ratio=3.1, $p<0.05$).

In interpreting the results of this study, Ott noted that there may have been differences in hiring practices in the two plants which could have contributed to the observed differences in mortality. In their conclusion, Ott et al. stated that a healthy worker effect (HWE) and the low power of their study did not permit them to dismiss the possibility of increased health risks within the working population exposed to MC.

Dr. Mirer of UAW testified [Tr. 1896–6, 9/24/92] that there is some evidence that there is excess work-related heart disease mortality in epidemiological studies that have observed SMRs greater than 80% for ischemic heart disease or any other cardiovascular disease. Furthermore, when the MC epidemiological studies are looked at together, there is evidence, although limited, that MC exposure has an effect on cardiovascular mortality.

On the other hand, Kodak [Ex. 91D] questioned the appropriateness of the referent population in the Rock Hill study, alleging that the SMR for ischemic heart disease in the referent population was unusually low, and that this fact, rather than an effect of MC exposure, caused the observed differences in ischemic heart disease rates.

In contrast, NIOSH considered the Rock Hill study to be suggestive of an effect of MC on risk of cardiac disease. According to NIOSH [Tr. 879, 9/21/92] the Ott study did not use appropriate analytic techniques that would allow the acute effects of MC on cardiac disease risk to be examined. Furthermore, NIOSH suggested [Tr. 969, 9/21/92] that future epidemiological studies should examine risks from MC exposure during the period when employees are actively working.

In an update to the Rock Hill study, Lanes et al. followed the Ott et al. cohort through September 1986 [Ex. 7–260] and December 1990 [Ex. 106]. Lanes et al. used the population of York County, South Carolina as the comparison group. Statistically significant excess mortality was observed for cancer of the liver and biliary passages (SMR=5.75, CI:1.82–13.78) in the study group. Excess mortality was also observed for buccal cavity and pharynx cancer (SMR=2.31, 95% CI:0.39–7.60) and melanoma (SMR=2.28, CI:0.38–7.51), although mortality from these causes did not reach statistical significance. No excess mortality was observed for ischemic heart disease (SMR=0.90, CI:0.62–1.27).

Examination of the liver and biliary cancers indicated that the workers had ten or more years of employment and at least 20 years since first employment (4 observed v. 0.35 expected). Three of the four employees who died from liver/biliary cancer had tumor sites in the intrahepatic and common bile duct, common bile duct, and ampulla of Vater. Approximate durations of employment for these three cases were 28 years, 20 years, and less than one year. No medical record for the third case could be obtained. However, an autopsy report indicated adenocarcinoma of the liver for this case. To estimate the expected number of biliary cancer deaths, Lanes et al. used Surveillance, Epidemiology, and End Results (SEER) mortality rates of the continental United States. The computed risk estimate, based on 0.15 cases expected, was SMR=20 (95% CI:5.2–56.0).

The authors hypothesized that the biliary duct cancer cases may have been due to factors such as oral contraceptive use, gallstones, or ulcerative colitis. However, it appeared that medical records showed no indication of gallstones or ulcerative colitis in workers who died of biliary cancer. Moreover, although these factors were not specifically controlled for, there is no reason to believe the rates of these factors would be different in the exposed cohort compared to the general U.S. population.

Lanes et al. updated their study through December 31, 1990 [Ex. 106] using the National Death Index and focused on mortality from pancreatic cancer, biliary and liver cancer, and ischemic heart disease. Lanes et al. ascertained fifty more death certificates from the end of the last follow-up period on September 1, 1986. As before, York County, South Carolina was used as the comparison population.

The overall SMR from all causes of death was 0.90, and for malignant neoplasms, the SMR was 0.82. In this follow-up, the SMR for liver and biliary cancer dropped from 5.75 to 2.98 (95% CI:0.81–7.63). No additional deaths from biliary or liver cancer were observed. In the original and updated studies combined, four deaths from biliary/liver cancer were observed and 0.64 were expected. Using a Poisson distribution, Lanes et al. calculated the probability of failing to observe any liver/biliary

cancer deaths in this update if the ''true'' value of the SMR for liver/biliary cancer was 5.75 (from the previous study) and then expecting 3.68 deaths in this follow-up (0.64×5.75). They estimated the probability that this update would have no observed biliary/liver cancer deaths if the true SMR were 5.75, as $e^{-3.68}$=0.025. On the other hand, if MC had no effect on liver and biliary cancer mortality, Lanes et al. estimated that the probability of observing zero deaths would have been 0.527 ($e^{-0.64}$). Lanes et al. used the likelihood ratio (0.527/0.025=21.08) to compare these two hypotheses. The authors concluded that the null hypothesis that the SMR=1.0 was 21 times more probable than the hypothesis that the SMR=5.75.

Because of the small number of cases involved and the instability of the numbers generated in this type of statistical analysis, OSHA believes that this study, overall, is suggestive (but not definitive) of an association between occupational exposure to MC and elevation of human cancer risk. Furthermore, the Agency has determined that the study results are not inconsistent with the results of the NTP cancer bioassay.

Hoechst-Celanese [Ex. 19–65, pp. 6–8; Ex. 19–19] was concerned that OSHA considered the incidence of biliary cancer as evidence of a positive effect. They argued that the reported excess in biliary tract cancer did not support the conclusion that MC exposure is associated with an increased risk of cancer. Specifically, they noted that,

(1) Biliary cancers have not been reported in any of the animal cancer studies of MC; (2) no statistically significant increase in biliary cancers was seen in the Cumberland study (described below); (3) no statistically significant excess in biliary cancers was reported in the Kodak studies (described below); (4) It was unlikely that MC could have been responsible for the biliary tract cancer observed in one employee who had been exposed to MC for less than one year; and (5) the Rock Hill study did not control for other chemical exposures.

Comments by the Halogenated Solvents Industry Alliance (HSIA) [Ex. 19–45, p. 47] were in accord with those of Hoechst-Celanese.

Dr. Shy, on behalf of Kodak, asserted [Tr. 1303, 9/22/92; Ex. 91F] that MC exposure failed to meet Bradford Hill's criteria for causality (e.g., biological plausibility, dose-response, and consistency) for producing biliary tract cancer. Dr. Shy acknowledged that animal bioassays have demonstrated liver tumors from MC exposure, but he noted that there is no evidence in humans that liver and biliary tract cancers have the same etiology. Furthermore, Dr. Shy argued that,

(1) the results from the Lanes study is not supported by *in vitro* or pharmacokinetic studies.

(2) a dose-response relationship could not be determined from the Lanes study because there were no direct measurements of worker exposure to MC.

(3) the observed association between MC exposure and liver/biliary cancer was an isolated finding and the existence of a causal relationship could not be concluded.

(4) the excess biliary tract cancer in the Lanes study was not consistent with the other three epidemiological studies (Hearne, 1987, 1990, 1992; Hearne, 1992; Gibbs, 1992).

Dr. Shy did recognize that there was a strong association between MC exposure and biliary tract cancer in the Lanes study (SMR=20). Moreover, the 20 year time interval between first exposure and death from biliary tract cancer provided evidence that ''exposure preceded cancer with an appropriate interval for induction of the tumor [Ex. 91F].''

OSHA disagrees with the conclusions reached by Dr. Shy. The Agency believes that the risks of biliary cancer observed in these studies is consistent with risks derived from its pharmacokinetic analysis (see the Quantitative Risk Assessment, Section VI). Since the occupational exposures in these studies are likely to have been among the highest in any of the epidemiologic cohorts, there is no evidence that the increased biliary/liver cancer result is inconsistent with other reported epidemiological findings. Regarding the biological plausibility, the Agency notes that human biliary cells appear to contain high concentrations of the mRNA for GST (the enzyme many investigators believe to be responsible for MC-induced carcinogenesis) [Exs. 124 and 124A]. Although this requires more investigation to determine if there is a direct relationship, OSHA believes there is a plausible mechanistic argument for MC causality in human biliary tract cancers. The Agency agrees with Dr. Shy, however, that the lack of dose-response data and the small number of cases in this cohort limit the strength of conclusions that can be drawn from this study. After weighing these considerations, the Agency has determined that there is suggestive evidence of a causal role for MC in these cases of biliary cancer.

Gibbs et al. conducted a study of another cellulose acetate and triacetate fibers plant in Cumberland, Maryland [Ex. 54] to evaluate the possible relationship between MC exposure and biliary/liver cancer. This plant, which ceased to operate in 1982, had operations similar to the plant in Rock Hill, and it was assumed to have had similar MC exposure levels as well. However, exposure measurements were not submitted for the Cumberland plant and it is unknown whether the Cumberland employees experienced the same exposures as their Rock Hill counterparts.

The Gibbs study investigated the mortality of 3,211 workers who were employed at this plant on or after January 1970. There were 2,187 men and 1,024 women in the cohort. Most of the workers in the cohort were hired prior to 1979 (2,566 total). The study population was divided into three subcohorts based on their estimated exposure to MC: 1) 834 men and 146 women in the ''high exposure'' group (estimated to be 350–700 ppm), 2) 1095 men and 832 women in the ''low but never high exposure'' group (estimated to be 50–100 ppm), and 3) 256 men and 46 women in the ''no exposure'' group. This cohort was followed through December 1989. The observed mortality was compared to expected death rates for Allegany County, Maryland (where the plant was located and where most of the cohort deaths occurred), the State of Maryland, and the United States.

The author of this study believed that the county rates were the most appropriate to use because the city of Cumberland is located in a rural area of Maryland and the state rates may have been influenced by rates in large urban areas such as Baltimore. In addition, local rates tend to adjust for social, economic, ethnic, and cultural factors which may be related to disease risk, access to medical care, etc. However, if the fiber plant was the major employer in this rural area, then county rates may reflect the cohort's mortality rather than the background risk, in which case, state rates or U.S. population rates would be more appropriate. The overall mortality rate for the high MC-exposed group was below the expected rates for Allegany County, Maryland, and the U.S. population.

As in the Rock Hill study, mortality from biliary tract cancer was observed in the Cumberland study, although no statistically significant elevated incidence of biliary cancer was found (two cases of biliary tract cancer were observed). In the high exposure group, there was one death (1.24 expected with Allegany rates (SMR=80.5) and 1.42 expected with Maryland rates (SMR=70.4)). In the low MC-exposed group, there was also one death from biliary/liver cancer. For the high MC-

exposed subcohort, Gibbs et al. estimated SMRs of 80.4, 70.3, and 75.1 when comparisons were made with Allegany County, Maryland, and U.S. rates, respectively. In the low MC-exposed subcohort, the SMRs using Allegany and Maryland rates were 75.4 and 76.4, respectively. This cohort should be followed for a longer period of time to help clarify the suggested association between MC exposure and biliary cancer observed in the Rock Hill cohort.

Statistically significant excess mortality was also observed from prostate, uterine, and cervical cancers, although these also represented small numbers of cases: 13, 2, and 1, respectively.

The excess of prostate cancer in the Gibbs et al. study suggested an exposure-response relationship (3 deaths in no MC-exposure group, 9 in low MC-exposure group, and 13 in high MC-exposure group). According to Gibbs et al. and Shy [Tr. 1303, 9/22/92; Exs. 19–64, 91F], this response may have been related to other chemical exposures (occupational or non-occupational). In support of this hypothesis, no other epidemiological or animal studies of MC exposure have suggested a relationship between prostate cancer and MC. Hoechst-Celanese [Ex. 19–65, pp. 10–12; Ex. 91D, p. 12] cautioned OSHA not to overinterpret the excess of prostate cancer in the Cumberland study for the following reasons:

> (1) of all the epidemiological studies, only the Cumberland study has shown an excess of prostate cancer; (2) of the thirteen high subcohort men who died of prostate cancer, twelve worked in the extrusion area of the Cumberland plant before methylene chloride was used as a solvent in cellulose triacetate fiber production. Thus, these men may have had longer exposure to other chemicals; (3) the study did not control for other personal risk factors; (4) Gibbs reported an increased incidence of prostate cancer elsewhere in the textile industry; and (5) the large number of statistical tests may have increased the probability of finding the death rate of a specific cause to be elevated or depressed.

OSHA believes that the increased risk of prostate cancer should be noted as a possible positive effect of MC exposure on cancer risk, particularly considering the exposure-response relationship. However, because of potential confounding factors and lack of corroborating findings in other studies, OSHA believes this is suggestive rather than conclusive evidence of a human carcinogenic effect.

b. Studies of film production workers. In their original study of film production workers, Friedlander et al. [Ex. 4–27] conducted both a proportionate mortality study and a retrospective mortality cohort study to determine if workers exposed to MC experienced an increased risk for specific causes of mortality. The cohort in these studies consisted of workers who worked in any department in film production that used MC as its primary solvent for approximately thirty years. The cohort was followed through 1976.

Proportionate mortality analysis for those workers ever employed in the study area versus a comparison group of workers in other Kodak Park departments produced a proportionate mortality ratio (PMR) of 143.88 for liver (intrahepatic ducts-primary) cancer. For ischemic heart disease, Friedlander et al. calculated a PMR of 94.74. No statistically significant differences were observed at $p \leq 0.05$.

For the cohort mortality study, Friedlander et al. used rates from the 1964–70 hourly males age group exposed to MC in the film department and the other Kodak Park departments for internal comparison. Mortality rates for New York State, excluding New York City, males age group were used for external comparisons.

Forty-five deaths from circulatory diseases were observed in the MC-exposed cohort versus 38.5 expected in the Kodak Park referent group. Also, 6 deaths from respiratory diseases were reported in the MC-exposed group versus 3.2 expected for the Kodak Park comparison group. No liver deaths were observed in this cohort. Thirty-three deaths from ischemic heart disease were observed in this cohort compared with 28.7 expected in the Kodak Park population. None of these observed differences in mortality reached statistical significance.

Hearne et al. conducted several updates to the cohort study involving MC exposure and mortality among workers in film production areas at the Kodak plant in Rochester, New York [Exs. 7–122, 7–163, 49 A–1]. In the first update, the study cohort was followed through 1983. Two referent groups were utilized in this study: the general population of upstate New York men, excluding New York City, and Kodak Park employees.

No statistically significant findings were observed for any cause of death. However, Hearne et al. did find a relatively large number (8 observed) of pancreatic cancer deaths compared with the New York State (3.2 expected) and Kodak (3.1 expected) populations. This observation did not achieve statistical significance and a dose-response relationship was not observed when Hearne et al. considered latency and dose.

Hearne et al. then updated this study through 1988 [Ex. 7–163] and 1990 [Ex. 49 A–2]. In the 1988 update, nonsignificant deficits in observed-expected ratios for lung and liver cancer were found. Also, overall mortality from 1964 to 1988 was significantly less than in both referent groups. Since 1986, the number of pancreatic cancer deaths remained the same. As before, dose-response analysis showed no statistically significant pattern when latency or dose were considered.

The 1990 update showed that deaths due to liver cancer, lung cancer, and ischemic heart disease were below the expected numbers in both referent groups. Also, no additional pancreatic cancer deaths were observed in this second update. Since the start of the follow-up, Hearne et al. observed 8 deaths from pancreatic cancer compared with 4.5 expected (SMR = 1.78, p = 0.17).

Hearne et al. [Ex. 49 A–1] conducted a second Kodak cohort study involving workers in cellulose triacetate preparation and film base manufacturing between 1946 and 1970. Hearne et al. addressed the potential selection bias in the 1964–70 Kodak cohort by including only workers exposed primarily to MC after it was introduced in these areas and making the study more complete by adding workers in the Dope Department, which prepares the viscous cellulose triacetate mixture used in the film base coating, and the Distilling Department, which redistills and reblends solvents recovered from the coating operations.

The 1,311 men in the cohort were followed through 1990. An occupational control group could not be formed because death rates for Kodak employees before 1964 were unavailable. Instead, male residents of upstate New York living outside of the five New York City counties were used.

Hearne et al. combined exposures by job and time period with occupational history information to produce a career exposure estimate for each individual in the study for dose-response analyses. The mean career individual exposure was approximately 40 ppm for 17 years and the average interval between first exposure and end of follow-up was about 32 years.

Total mortality for this cohort was 22% below the expected mortality (statistically significant). Circulatory diseases and ischemic heart disease mortality were also statistically significantly below expectation. For lung cancer there were 22 deaths (28.7 expected) and for liver/biliary cancer

there was one death (1.5 expected). Hearne et al. found that the number of pancreatic cancer deaths observed (4) was similar to the expected number (4.4). In this cohort, the number of observed deaths was greater than expected for diseases of the colon/rectum (13 observed v. 10.8 expected), brain (5 v. 2.3), and for leukemia (7 v. 3.4), but were not statistically significant.

Hearne et al. concluded that the findings in the 1964–70 cohort were consistent with the 1946–70 cohort: mortality from all causes, cancer (including lung and liver malignancies), and ischemic heart disease was lower than expected. Also, since the number of observed pancreatic cancer deaths in this cohort was similar to the expected number, Hearne et al. believed that this provided further evidence that the earlier finding of an excess of pancreatic cancer in the 1964–70 cohort was due to chance or to factors other than MC exposure.

Kodak [Tr. 1287–88, 9/22/92] also investigated the risk of adverse health effects during active occupational exposure to MC, as suggested by NIOSH [Tr. 970, 9/21/92]. Using person-years of active employment only in their analysis, Hearne observed 27 deaths (36 were expected in the internal Kodak reference group) from ischemic heart disease in the 1964–70 Kodak cohort; in the 1946–70 cohort, Kodak recorded 33 deaths compared with 43 expected in the New York State comparison population.

NIOSH testified [Tr. 877–83, 9/21/92] that the healthy worker effect (HWE) could have obscured any excess mortality from ischemic heart disease caused by MC exposure. NIOSH has stated that the HWE may be particularly strong for cardiovascular diseases.

The HWE is likely to be less of a factor when occupational comparison groups are used. Kodak's use of the Kodak Park employees as a comparison group should reduce the HWE in its studies. However, there are two potential problems with using occupational comparison groups in this instance:

(1) Cancer rates are more stable in larger populations, so comparison with state and national rates may be more appropriate.

(2) Due to the volume of MC used in the Kodak plant, the occupational comparison group may be exposed to air- or water-borne environmental concentrations of MC which could obscure the impact of occupational exposure to MC on cancer incidence.

c. Study of workers in paint and varnish manufacturing. The NPCA submitted to the record an epidemiological study of employees who worked for at least one year in the manufacture of paint or varnish [Ex. 10–29B]. OSHA's review of this study was published in the proposed rule [56 FR 57077]. Although no statistically significant excess of mortality was reported, OSHA noted that there were 4 pancreatic cancers (1.93 expected) and 15 cancers of digestive organs and peritoneum (10.66 expected) among MC-exposed workers.

d. Astrocytic brain cancer among workers in electronic equipment production and repair. In its March 11, 1994 Notice of Limited Reopening of the Rulemaking Record, OSHA solicited comments on a case-control study submitted to the Agency by the National Cancer Institute (NCI) [Exs. 112 and 113].

Heineman et al. conducted a case-control study to examine the potential association between brain cancer and exposure to organic solvents as a group and six chlorinated aliphatic hydrocarbons (CAHs) including MC. Cases were defined as white males who died from brain or other central nervous system tumors in southern Louisiana, northern New Jersey, and Philadelphia, Pennsylvania. Controls were randomly selected from death certificates and included white males who died of causes other than brain tumors, cerebrovascular diseases, epilepsy, suicide, and homicide. Controls were frequency-matched to cases by age, year of death, and geographic area.

Four-digit Standard Industrial Classification (SIC) and 4-digit Standard Occupational Classification (SOC) codes were employed to code occupational histories of study subjects. These codes linked work histories to job-exposure matrices which ''characterized likely exposure to the six CAHs and to organic solvents'' [Ex. 112]. Gomez et al. [Ex. 112] used an algorithm to assign estimates of probability and intensity of exposure to each industry/occupation combination in subjects' work histories. As noted by Gomez et al., these estimates were based on ''occupation alone, industry alone, or both occupation and industry, depending on the specificity of the exposure environment that could be inferred from the occupational (SOC) code.''

The following surrogate measures of dose, for each substance, were used to summarize ''likely'' exposure histories for each study subject: duration of employment in occupation/industry combinations considered exposed, a cumulative exposure score, and ''average'' intensity of exposure. Odds ratios were calculated for exposure intensity categories to refrain from using weights. These categories did not include duration in jobs with lower intensity for subjects with high or medium intensity jobs. In their statistical analyses, Heineman et al. controlled for age, geographic area, and employment in electronics-related occupations/industries.

Astrocytic brain cancer was not found to be associated with ''ever'' being exposed to organic solvents as a group or to any of the six CAHs examined in this study. However, as probability of exposure to organic solvents as a group, and MC in particular, increased, the risk of brain cancer increased (chi-squared statistics for trend for organic solvents and MC were 1.93 and 2.29 ($p<0.05$), respectively). For MC there was a 2.4-fold increase in risk for subjects with a high probability of exposure (confidence interval=1.0–5.9).

Risk of brain cancer significantly increased with duration of exposure for subjects with high probabilities of MC exposure (OR=6.1; CI=1.1–43.8). Heineman et al. found that, in the high probability of MC exposure category, risk significantly increased with duration (chi for trend=2.58, $p<0.01$). Similar results were seen for organic solvents and methyl chloroform for all probabilities combined (chi-squared statistics for trend were 2.35 ($p<0.01$) and 1.87 ($p<0.05$), respectively).

Lagging exposure by 10 years produced findings analogous to those noted above. Higher risks and a sharper increase with duration was observed for organic solvents when exposure was lagged by 20 years (all probabilities: 2–20 years, OR=1.3 (95% CI=0.9–2.0); 21+ years, OR=2.8 (1.1–3.7); p for trend=0.006; high probability: 2–20 years, OR=1.2 (95% CI=0.7–1.9); 21+ years, OR=3.1 (1.3–7.4), p=0.009).

Subjects with a high probability of MC exposure experienced a statistically significant increased risk as the cumulative exposure score increased (chi-squared statistics for trend=2.18, $p<0.05$). However, risk did not increase monotonically with cumulative exposure.

Lagging exposure 20 years supported the odds ratios and the trends for organic solvents, particularly in men with a high probability of exposure (low cumulative score: OR=1.1 (95% CI=0.5–2.3); medium: OR=1.4 (0.8–2.5); high: OR=2.2 (1.0–4.5); p for trend=0.02). Few individuals had high cumulative scores when exposure was lagged 20 years for the individual CAHs.

Compared with jobs with medium or low intensity exposures to organic solvents and all six CAHs, risk of brain cancer was higher for subjects who

worked in jobs with high intensity exposures. Brain cancer was associated most strongly, and increased with probability of exposure, among subjects who worked 20 or more years with high intensity exposure to MC (all probabilities: OR=6.7, CI=1.3–47.4; high probability: OR=8.8, CI=1.0–200.0).

Since many subjects were determined to have been exposed to more than one of the CAHs, sometimes even in the same job, Heineman et al. used logistic regression to examine, simultaneously, the effects of MC, carbon tetrachloride, tetrachloroethylene, and trichloroethylene, controlling for age, geographic area, and employment in electronics-related occupations/industries. MC was the only substance to show a statistically significant increase in risk as the probability of exposure increased (low: OR=0.9, CI=0.5–1.6); medium: OR=1.4, CI=0.6–3.1; high: OR=2.4, CI=0.9–6.4; chi-squared statistics for trend=2.08, $p<0.05$). Risks associated with MC increased when adjustments for exposure to the other agents were made. In addition, subjects employed for 20 years or more in jobs with high average intensity MC exposure showed an eight-fold excess of brain cancer (OR=8.5, CI=1.3–55.5), taking all probabilities into consideration.

Among the six CAHs examined in this study Heineman et al. found the strongest association between brain cancer and MC-exposure, for which relative risks rose with probability, duration, and average intensity of exposure, though not with the cumulative exposure index.

According to Heineman et al., the major weakness of this study was not having direct information on exposure to solvents. Next-of-kin data, poor specificity of some work histories for specific solvents, and the interchangeability of solvents may have resulted in misclassification of individuals with respect to any of the exposure measurements used in this study. However, Heineman et al. pointed out that the potential sources of error probably did not significantly bias risk estimates away from the null or generate the observed trends.

Another limitation of this study, pointed out by Heineman et al., was that over one-third of the next-of-kin of eligible cases and controls were not interviewed. According to Heineman et al., this could have artificially created the associations seen in this study ''only by underrepresenting cases who were unexposed, and/or controls who were exposed, to solvents in general, and MC in particular'' [Ex. 113]. Heineman further remarked that differential misclassification was probably not a problem in this study because occupational histories came from next-of-kin of both cases and controls.

In light of the limitations of this study, however, Heineman et al. commented that the consistency of exposure-response trends for MC was surprising and suggestive. Moreover, Heineman et al. believed that the trends and consistency of the associations between brain cancer and MC could not be explained by chance alone.

Several commenters [Exs. 115–1, 115–31, 115–32, 115–36] indicated that Heineman et al. relied too heavily on next-of-kin information. Information provided by next-of-kin concerning jobs held, job descriptions, dates of employment, and hours worked per week may be flawed with recall bias. Next-of-kin may not be able to accurately recall job-related information, especially for jobs held early in life. If next-of-kin for cases or controls had better recall than the other group, differential misclassification could occur. HSIA [Ex. 115–36] stated that even small differences in error rates between cases and controls could produce false associations. Both HSIA and NIOSH [Ex.115–31] agreed that this indirect source of exposure information was likely to produce some degree of misclassification. However, NIOSH noted that misclassification ''is a typical problem in population based case-control studies of this type [Ex. 115–31]'' and that this misclassification could also explain the fact that no associations were found between brain cancer and the cumulative exposure score.

Organization Resources Counselors (ORC) [Ex. 115–2] and Abbott Laboratories [Ex. 115–30] were concerned that the lack of exposure verification made this NCI study unreliable for setting MC exposure limits. ORC stated that exposure values were assigned to all SIC and SOC codes, and not developed based on job history information, which would have given the study more validity. Kodak also expressed some concern regarding this study due to lack of accurate records of past exposures, reliance on expert judgement to a large degree, use of next-of-kin to determine potential exposure, and undocumented qualifications of those making judgements concerning the different occupations and industries involved. In addition, Kodak felt that the exposure data were ''at best, unsubstantiated semi-qualitative judgements of likelihood and intensity of exposure [Ex. 115–1].'' Organization Resources Counselors [Ex. 115–2] and Abbott Laboratories [Ex. 115–30] asserted that it was impossible to tell if those who died of cancer had been exposed to MC because there was no exposure verification. Vulcan Chemicals [Ex. 115–32] criticized the investigators for not going to work sites and determining the actual magnitude of exposure to the CAHs. HSIA [Ex. 115–36] argued that ''concordance of proxy reports with actual work histories may range from 0–50% for decedents' first jobs and from 50–70% for last jobs.'' OSHA believes that exposure verification would have increased the validity of the findings of this study. However, lack of exposure verification does not nullify the results of the study. The Agency believes that the associations observed are suggestive of a human carcinogenic effect of MC.

Another issue that Kodak [Ex. 115–1] and Vulcan [Ex. 115–32] emphasized was the possible exposure to other chemicals or sources of potential human carcinogens, such as ionizing radiation, electromagnetic fields, smoking history, and place of residence. Vulcan [Ex. 115–32] noted that there may have been selection bias in this study because of the large ratio of astrocytic brain cancer tumors to the total number of brain tumors. Although they offered no explanation of how this selection bias would operate, Vulcan did suggest that this issue should be investigated further.

Vulcan was also concerned that the matching of controls and cases with respect to occupations and socioeconomic status may be inadequate. In particular, Vulcan criticized the Heineman study for not presenting the occupations of the control group and for not matching the socioeconomic status of the two groups. Similarly, Kodak [Ex. 115–1] stated that some adjustment should have been made in order to match across educational levels.

Kodak [Ex. 115–1] also believed that the estimates of trends observed in this study could have been affected, if workers in the longest duration or the higher probability of exposure categories had longer dates of employment, worked in more stable industries, and had better health benefits, better access to medical care, and more sophisticated diagnostic procedures. OSHA believes that there is no evidence that this is the case in this study.

HSIA [Ex. 115–36] criticized the methodology for assessing the number of industries with exposures to CAHs. HSIA argued that Gomez et al. did not fully explain how they determined that workplaces in the specific SICs would have CAH exposures. According to HSIA, Gomez et al. reported inaccurate

information regarding industry use of MC. HSIA cited EPA's ''Toxic Air Pollutant/Source Crosswalk, A Screening Tool for Locating Possible Sources Emitting Toxic Air Pollutants (EPA–450/4–87–023A, Dec. 1987)'' which revealed a higher number of SIC codes using MC. In conclusion, HSIA asserted that Gomez et al.'s ''exposure scenario'' was incorrect.

Several commenters [Exs. 115–1, 115–31, 115–36] argued that the Heineman et al. study should only be considered a hypothesis-generating study and should not be used to adjust the PEL.

OSHA agrees with NIOSH that the Heineman et al. study was well-conducted because there was a systematic attempt to estimate exposure by work experience. Furthermore, there was a remarkably high correlation between exposure to MC and brain tumors. OSHA concludes that the results from this study strongly suggest a possible association between MC and brain cancer. However, in the absence of quantified exposure data for these workers, it remains relatively speculative to attempt to estimate a quantitative dose-response relationship. Therefore, OSHA concludes that the risk estimate based on the animal data is the best available and accordingly it retains that estimate for its significant risk analysis.

e. Summary of epidemiological studies. Considered as a whole, the available epidemiologic evidence did not demonstrate a strong, statistically significant cancer risk associated with occupational exposures to MC. However, the positive trend for biliary tract/liver cancer deaths, the association between occupational MC exposure and astrocytic brain cancer and the statistically significant excess prostate cancer results are suggestive of an association between MC exposure and cancer risk. In addition, the non-positive epidemiological studies summarized here are not of sufficient power to rule out the positive results from the animal studies. This issue is addressed further in the Quantitative Risk Assessment section of this document.

In summary, the epidemiological results are suggestive of an association between occupational exposure to MC and elevated cancer risk which offers supporting evidence to the positive animal bioassay results.

4. Conclusion

OSHA concludes from the mutagenicity, animal bioassay and human epidemiology data that MC causes cancer in test animals and that it is a potential occupational carcinogen. The Agency has determined that, because of the quality of the studies, the clear dose-response relationship and the appropriateness of the route of administration, the NTP rodent bioassay data are the best available for quantitative cancer risk assessment.

OSHA also concludes that the epidemiology data, in some cases, suggest a positive association between human MC exposure and cancer incidence, but the dose-response relationships are not clear. The Agency has determined that the remaining epidemiology data (the non-positive studies) are not of sufficient power to rule out the results obtained in the animal bioassay data and that the animal data provide the best available data for quantitative risk assessment.

E. Other Toxic Responses

1. Central Nervous System Toxicity

MC acts on the central nervous system (CNS) as a CNS depressant. CNS depression has been described in humans exposed to MC concentrations as low as 175 ppm (8-hour TWA). This depression in CNS activity was manifested as increased tiredness, decreased alertness and decreased vigilance. These effects could compromise worker safety by leading to an increased likelihood of accidents following MC exposure.

a. Animal studies. In the NPRM, OSHA reviewed two animal studies of MC CNS toxicity (briefly summarized below) and concluded that the CNS was potentially susceptible to reversible and irreversible effects due to MC exposure.

Savolainen et al. [Ex. 7–178] studied biochemical changes in the brains of rats exposed to MC. Rats were exposed to 500 ppm MC for 6 hr/d. On the fifth day, after 3 and 4 hours of exposure to MC, levels of acid proteinase in rat brains were significantly increased, but no change in brain RNA levels was reported. The authors suggested that the increase in acid proteinase may have been the result of increased levels of CO from metabolism of MC. OSHA believes that this study shows that MC can cause specific changes in the neurological system at a biochemical level. The Agency intends to monitor the scientific literature for additional developments on these effects, but has not used this information in setting the MC exposure limits because it is presently unclear how changes in acid proteinase are related to the observed CNS depressive effects of MC in humans.

Rosengren et al. [Ex. 7–56] looked at the effects of MC on glial cell marker proteins and DNA concentrations in gerbil brains after continuous exposure to 210, 350 or 700 ppm MC. Because of high mortality in the 2 higher doses, no data were collected at 700 ppm and exposure was terminated after 10 weeks at 350 ppm. Exposure to 210 ppm was continued for three months. Exposure to MC was followed by four months of no exposure before animals were examined for irreversible CNS effects. The authors found increased levels of glial cell marker proteins in the frontal cerebral cortex and sensory motor cortex after exposure to 350 ppm MC. These findings are consistent with glial cell hypertrophy or glial cell proliferation. Levels of DNA were decreased in the hippocampus of gerbils exposed to both 210 and 350 ppm and in the cerebellar hemispheres after 350 ppm MC. Decreased DNA concentrations indicate decreased cell density resulting from cell death or inhibition of DNA synthesis.

The neurotoxic mechanism of action of MC in gerbil brains is not understood. However, since the metabolism of MC to CO was determined to be saturated at both 210 and 350 ppm (COHb levels were equivalent at both exposure concentrations), the changes in glial cell proteins and DNA concentrations was attributed to either a direct effect of MC or an effect of a metabolite of the GST pathway. Although this study describes biochemical changes in the CNS subsequent to MC exposure, the high mortality of the experimental animals and the lack of MC toxicity data in the gerbil make it difficult to determine the significance of this study for extrapolation to other species. It is also unclear how these effects would relate to CNS depression observed in humans after MC exposure. In addition, continuous exposure to MC has been shown in other experimental situations [Exs. 7–14 and 7–130] to elicit more severe health effects than exposure to similar or higher concentrations when the animals are allowed a recovery period (for example, 6 hours' exposure per day). Exposure on a 6 or 8-hour per day schedule is also more like occupational exposure scenarios and therefore those experiments are generally easier to interpret when assessing risk to workers.

In summary, OSHA believes that the rat and gerbil data described above shows that MC can cause specific changes in the neurological system at a biochemical level. The Agency intends to monitor the scientific literature for additional developments on these effects to determine if these types of effects have implications for human CNS risks.

b. Human studies. The CNS depressant effects of MC have been well described in the literature [Exs. 7–4, 7–153, 7–154, 7–160, 7–175, 7–182, 7–183, 7–184]. MC causes CNS depression which is characterized by tiredness, difficulty in maintaining concentration, decreased task vigilance, dizziness, headaches, and, at high concentrations, loss of consciousness and death. Accidental human overexposures to MC [Exs. 7–18, 7–19] (for example, at concentrations greater than 10,000 ppm) have resulted in narcosis and death. CNS depression has been described after humans were exposed to experimental MC concentrations as low as 200 ppm [Ex. 7–175] and occupational concentrations as low as 175 ppm [Ex. 7–153].

i. Experimental studies. CNS depression was detected in human subjects exposed to MC at concentrations as low as 200 ppm for 4 hours or 300 ppm for 1.5 hours [Exs. 7–4, 7–160, 7–175, 7–182 and 7–184]. In these experiments, which measured subtle CNS depression (such as dual task performance and visual evoked response), it was not possible to determine a no observed effect level (NOEL), because the lowest experimental concentration used (200 ppm) elicited CNS effects. Since a NOEL was not determined for the CNS effects of MC, those effects may occur at lower exposures or after exposure for shorter durations.

The HSIA questioned whether bias was introduced into the results of these studies by inadequate procedures to establish a ''double blind.'' This criticism raises a legitimate concern about the validity of the study. However, since Putz et al. did not describe the blinding procedures used in their experiments, the Agency concludes that there is not enough evidence publicly available to make the conclusion that the study is biased. OSHA believes that these studies were well conducted and is relying on the quality of the studies overall as evidence of the validity of the results. Absent evidence demonstrating the inadequacy of the blinding procedures, OSHA has determined that these studies show that MC can cause mild CNS depression in humans exposed at concentrations as low as 200 ppm.

NIOSH expressed concern regarding the potential for neurobehavioral impairment (expressed as CNS depression) at lower exposures and shorter durations, particularly in relation to the setting of a STEL for MC [Exs. 23–18 and 94]. In order to assess the potential impact of the CNS effects of MC, NIOSH looked at data gathered from several studies and compared breath concentrations of MC (as a surrogate for brain tissue MC concentrations) at different ambient exposure levels with the CNS depression described by Putz et al. [Ex. 7–175]. NIOSH concluded that:

> At the proposed STEL of 125 ppm, increased uptake of MC in active workers may place them in the breath concentration range associated with mild neurobehavioral impairment. Although there are insufficient data to draw firm conclusions, extrapolation from existing studies suggests that the proposed STEL of 125 ppm may not fully protect physically active workers from CNS impairment. Therefore, a lower STEL should be considered, if feasible.

In response to concerns raised by NIOSH, the HSIA [Ex. 105] noted that NIOSH's analysis of breath MC concentration versus neurobehavioral impairment ''seemed highly speculative.'' HSIA emphasized that the exposures which produced the reported neurobehavioral effects were observed only after 2 to 4 hours of exposure and that the effects were observed only when difficult tasks were measured.

To support their position, the HSIA asked Mr. Richard Reitz to use a PBPK model to estimate the concentration of MC in brain tissue. This analysis [Ex. 105] indicated that at exposures of 200 ppm for 15 minutes with persons exercising at 50 watts, the brain concentration of MC would be predicted to be similar to that observed in the Putz et al. study for subjects engaged in ''light activity'' for 2 hours at 200 ppm MC, which did not produce measurable CNS depression. (Putz et al. did not detect CNS depression in subjects exposed to 200 ppm for 2 hours). The model also predicted that 15-minute exposures to 125 ppm while the subject was exercising at 50 watts would produce brain MC concentrations substantially less than that predicted for the 4 hour exposure to 200 ppm MC.

OSHA considered the PBPK analysis presented by the HSIA, but was concerned that there has been no experimental validation of the predicted brain MC concentrations or any evidence as to what MC concentration would produce detectable CNS depression. OSHA believes the primary value of both the NIOSH and HSIA analyses is in demonstrating the relative effect that exercise and duration of exposure is likely to have on brain (or breath) concentrations of MC. The PBPK analysis clearly demonstrates that increasing exercise level increases brain concentration of MC, which is consistent with the detected CNS depression. Workers engaged in strenuous activity while exposed to MC should take special precautions, such as frequent breaks in fresh air, especially if dizziness or lightheadedness occurs.

Although OSHA found the PBPK model to be useful for demonstrating the interaction between exercise and brain concentration of MC, the Agency did not use the model quantitatively (for example, in determining the STEL). OSHA believes that the data suggest that there may be CNS effects at levels below those tested. There are no studies which directly address whether there are CNS effects after exposure to STEL concentrations of MC. To the extent that these effects occur, the STEL would not be protective. Mild and reversible CNS depression was detected at 200 ppm for 4 hours and 300 ppm for 1.5 hours. The Agency shares NIOSH's concern, based on extrapolation of breath MC concentrations, that the proposed STEL may not be adequately protective for physically-active workers.

OSHA concludes that there are clearly sufficient data to determine that a 125 ppm 15-minute STEL is needed to prevent a significant risk of material impairment to the CNS. Impairment of the CNS would also increase the risk from accidents. Measured data show risks at 200 ppm for four hours of exposure. A lower level at shorter duration is needed to avoid that risk. NIOSH's calculations show that for active workers a level lower than 125 ppm may be needed. However, because of feasibility concerns, which would be greater at lower levels and the suggestion that short duration of exposure (i.e., 15-minutes) may mitigate the effects, OSHA is retaining the proposed level, but will carefully monitor and follow up data to determine if this level eliminates significant risk.

ii. Occupational exposure studies. In the NPRM, OSHA summarized studies which it believed described a neuropathy associated with chronic occupational exposure to solvents. Weiss [Ex. 7–196] described the case of a 39-year old chemist who worked for 5 years with airborne concentrations of MC as high as 660 ppm to 3600 ppm in a room with poor ventilation. After 3 years of exposure, the worker developed neurological symptoms, characterized by restlessness, palpitations, forgetfulness, poor concentration, sleep disorders, and finally, acoustical delusions and optical hallucinations. No hepatic damage or cardiac toxicity was found. At the first appearance of symptoms, cessation of exposure produced an immediate cessation of symptoms. Later, longer and longer periods were required after termination of exposure in order to alleviate the

symptoms. The increasing persistence of symptoms is consistent with a diagnosis of toxic encephalosis.

Hanke et al. [Ex. 7–195] examined 32 floor tile setters who were exposed primarily to MC at concentrations from 400 to 5300 ppm for an average tenure of 7.7 years. Clinical examination of 14 of the workers who had neurological symptoms (headache, vertigo, sleep disturbance, digestive complaints and lapses in concentration and memory) revealed changes in the EEG patterns of the exposed workers which persisted over a weekend pause in exposure. These EEG changes were characteristic of a toxic encephalosis produced by chronic intoxication with a halogenated solvent (MC). The persistence of the EEG changes over the weekend break indicated a prolonged effect of MC exposure on EEG patterns. (Additional changes in the EEG found during exposure could be attributed to an acute effect of MC). Although these studies represent a small number of cases with very high chronic exposures, the evidence is suggestive of a relationship between chronic MC exposure and toxic encephalosis.

In a case study report, Barrowcliff et al. [Ex. 7–123] attributed cerebral damage in a case study to CO poisoning caused by exposure to MC. Axelson [Ex. 7–150] has described an increased number of neuropsychiatric disorders among occupations with high solvent exposures.

In the NPRM, OSHA expressed the opinion that these studies, taken together, ''provide suggestive evidence of a permanent toxicity [different from the observed reversible CNS depression] which may be the result of chronic exposure to MC.'' NIOSH stated that this assessment was too speculative and stated,

> in the Hanke study, MC was apparently only one component of a solvent mixture and may not have been the only neurotoxic agent* * * In addition, the observation interval of 2.5 days was not long enough to provide convincing evidence of irreversible effect, regardless of the active agent.

Upon reexamination of these studies, OSHA agrees with NIOSH [Ex. 19–46] that although a prolonged effect (over a weekend break in exposure) of MC on EEG patterns has been demonstrated, these studies do not support a determination that MC exposure is associated with irreversible brain damage in humans.

OSHA reviewed several other studies of occupational exposure to MC for evidence of CNS effects of MC. The first study was provided as an English translation of a Czechoslovakian paper by Kuzelova et al. [Ex. 7–26]. These investigators examined workers in a film production plant who were exposed to MC concentrations from 29 to 4899 ppm. Several workers suffered frank MC intoxication and many workers showed signs of MC-induced CNS depression. Toxicity associated with chronic MC exposure was observed in workers exposed to MC for up to two years, but the authors recommended continuing studies of the long-term health effects.

OSHA believes that this study shows CNS depression in workers exposed to MC. The Agency agrees with the authors that this study was not sufficient to adequately characterize the long-term CNS health effects that may be induced by MC exposure.

Cherry et al. [Ex. 7–154] studied the effects of occupational exposure to MC at 28 to 175 ppm in two exposed populations. In a 1981 study, the authors found a marginal increase in self-reported neurological symptoms among exposed workers. This increase disappeared when an appropriate reference group was used for comparison. However, in a 1983 investigation, Cherry [Ex. 7–153] showed statistically significant increases in tiredness and deficits in reaction time and digit symbol substitution which correlated with MC in blood. Ambient MC exposures for this population ranged from 28 to 175 ppm for the full shift. This study demonstrated CNS effects due to occupational MC exposures below 200 ppm (the lowest dose which was administered in the experimental studies).

The HSIA [Ex. 105, p. 34] commented as follows:

> Decades of experience with worker populations exposed even at levels up to the current 500 ppm TWA have provided no evidence that such workers have higher rates of accidents or other signs of significant neurobehavioral impairment.

To the contrary, OSHA believes that the occupational studies discussed above demonstrate that MC has an effect on the CNS at occupational exposure levels as low as 175 ppm.

The Agency believes that the 1983 study by Cherry shows that occupational exposure to MC concentrations below the former 8-hour TWA PEL of 500 ppm can produce detectable CNS effects. Although the 1981 study, which relied on self-report of neurological symptoms, did not demonstrate a CNS effect, the 1983 study examined more objective measures of CNS depression and correlated the observed effects with a direct measure of MC exposure. OSHA believes that this study demonstrates that, although the CNS depression may be mild, it is demonstrable in occupational settings and at concentrations in the range of the STEL (although the exposures in this study were over an 8-hour work day). As described above, OSHA is sufficiently concerned about the potential for health effects at concentrations below the STEL of 125 ppm that it will continue to gather information and revisit this issue, if warranted.

2. Cardiac Toxicity

As described in the section on the metabolism of MC, MC is metabolized *in vivo* (in animals and humans) to CO and CO_2. Cardiovascular stress has been observed after exposure to CO, so it is reasonable to suspect that similar health effects would be observed after exposure to MC (and metabolism to CO) [Ex. 7–73, 4–33]. Carbon monoxide successfully competes with oxygen and blocks the oxygen binding site on hemoglobin, producing carboxyhemoglobin (COHb) and reducing delivery of oxygen to the tissues. This reduces the oxygen supply to the heart itself, which can result in myocardial infarction (heart attack) [Ex. 4–33].

Generally, humans have a baseline level of COHb of less than 1% COHb due to the endogenous production of CO from normal metabolic processes. The measured level of COHb in the general non-smoking population is from 1% to 3% because of direct exposure to CO from combustion sources such as automobiles, etc. In smokers, COHb generally ranges from 2% to 10% because of the additional CO exposure during smoking. CO generated from exposure to MC would be additive to the COHb burden already experienced by an individual from direct exposure to CO. The cardiac health effects anticipated from exposure to MC itself or CO as the result of metabolism of MC are described below.

a. Animal studies. There is no evidence from animal studies in the MC rulemaking record that MC has a direct toxic effect on cardiac tissue. After lethal doses of MC, death has been primarily attributed to CNS and respiratory depression [Exs. 7–27, 7–28]. Also, chronic studies (in which COHb levels have been maintained at 10% and higher) [Exs. 7–3, 7–8, 7–14, 7–130, 7–151] have not shown direct cardiotoxicity.

Chlorinated solvents have been shown to sensitize the cardiac tissue to epinephrine- induced fatal cardiac arrhythmias [Ex. 7–226]. However, MC is less effective in sensitizing cardiac

tissue than other chlorinated analogues. MC caused sensitization of cardiac tissues only at doses well above doses which produce a narcotic effect. This finding indicates that compliance with an 8-hour TWA of 25 ppm MC would likely be sufficient to protect against such sensitization.

b. Human studies. The metabolism of MC to CO and measurement of COHb in human subjects exposed to MC were described in detail in the NPRM. In summary, it was found that exercising increased MC uptake and, subsequently, increased blood COHb levels compared to that of sedentary individuals [Ex. 7–222]. In addition, COHb levels due to smoking were found to be additive to the COHb produced by MC metabolism. Taken together, these results suggested that smokers or individuals engaged in physical exertion (as in a workplace) may be at increased risk from CO-induced toxicity from MC exposure. This risk may be especially elevated in individuals with silent or symptomatic cardiac disease who may be susceptible to very small increases in COHb because of an already impaired blood supply to the heart. Many American workers have silent or symptomatic heart disease. This increased OSHA's concern for the potential cardiac effects of MC and its metabolites.

Elevated COHb has been measured in humans experimentally and occupationally exposed to MC [Exs. 7–4, 7–5–R0327, 7–102, 7–115, 7–157, 7–159, 7–169, 7–174, 7–176]. The effects of elevated COHb are primarily increased risk of myocardial infarction, especially in susceptible individuals. Atkins and Baker [Ex. 7–198] described two cases of myocardial infarction in workers subsequent to CO exposure. COHb was measured at 30% and 24% in these individuals, which is much higher than normal general population levels of COHb. Humans exposed to MC would not be expected to experience COHb at those levels unless the exposure to MC was extremely high (greater than 500 ppm).

In a laboratory study of humans with coronary artery disease, subjects were exposed to CO and observed for cardiac health effects during exercise. In subjects with 3 to 10% COHb, decreased exercise tolerance and increased anginal pain were observed [Ex. 7–198]. In an epidemiological study submitted to OSHA by NIOSH during the MC public hearings, the investigators observed a statistically significant excess of ischemic heart disease mortality among tunnel workers when compared with rates for the New York City population [Ex. 23–18]. This increase in mortality is supported by clinical findings. Allred et al. [Ex. 23–18] observed that elevation of COHb from 0.6% to as low as 2% decreased time to myocardial ischemia and anginal pain during laboratory tests. OSHA believes that these studies, taken together, suggest that small increases in COHb can adversely affect persons with compromised cardiac health. The results observed in the tunnel workers are particularly relevant because they show an increased risk in a working population. NIOSH used these studies to support its recommendation that the COHb effects of MC be carefully considered in the MC rulemaking [Tr. 881–2, 9/21/92]. OSHA agreed with NIOSH that the effects observed at low levels of COHb are cause for concern about the risks of MC metabolism to CO.

In the NPRM, OSHA also reviewed case reports in which individuals exposed to MC experienced myocardial infarctions [Exs. 7–102, 7–73]. These case reports suggested that exposure to MC increased cardiac stress, although it was not determined whether this was a direct effect of MC or as the result of metabolism of MC to CO. OSHA believes that these case studies support the hypothesis that CO generated through metabolism of MC would have the same adverse health effects as direct CO exposure.

Two epidemiological studies (in film coating and fiber production workers) [Exs. 7–75, 7–76, 7–122, 7–163] examined cardiac mortality due to occupational exposure to MC. Ott [Ex. 7–76] compared mortality from a plant in South Carolina that used MC to a reference plant in Virginia. An increased risk ratio for ischemic heart disease (risk ratio = 3.1) was observed in the MC-exposed workers compared to the reference population.

This approach controls for the healthy worker effect by comparing two working populations, and excess risk was demonstrated. The authors believed that the apparent excess risk was due to geographical variability in the incidence of ischemic heart disease. The population from the reference plant was found to have an unusually low death rate due to ischemic heart disease in comparison to the general population rate.

In an update of the study [Ex. 7–75], the ischemic heart disease rate in the exposed population was compared to that in the surrounding York County, S.C. population instead of a reference plant. No difference in ischemic heart disease rates was detected between exposed workers and controls, although this approach would not control for the healthy worker effect. The SMR was 0.94 (32 observed, 34.2 expected).

NIOSH disagreed with the conclusion of the authors of this study, and indicated that the studies summarized above would be cause for concern regarding the cardiac effects of MC. NIOSH suggested that the raw data from the epidemiological studies of cellulose acetate film production workers and the studies of workers in cellulose acetate fiber manufacture be reviewed for cardiac mortality occurring during the period of occupational exposure for the workers. OSHA is concerned about the potential CO effects from metabolism of MC and will continue to monitor the scientific literature on this topic. However, the Agency is setting the exposure limits based on cancer and CNS effects and has not reached final conclusions on this issue.

3. Hepatic Toxicity

Chlorinated hydrocarbons as a class, such as carbon tetrachloride and chloroform, are toxic to the liver. In general, chlorinated hydrocarbons cause cytotoxicity (cell death) in rodent livers. Therefore, there was suspicion that the liver would also be a target organ for MC (a chlorinated hydrocarbon) toxicity. OSHA evaluated the available literature on the hepatic effects of MC in animal and human studies.

a. Animal studies. Studies of the effects of MC exposure on the rodent liver have not demonstrated significant acute liver toxicity, even at lethal or near-lethal doses. As summarized in the NPRM, Kutob et al. [Ex. 7–27] and Klaassen et al. [Ex. 7–28] conducted experiments on halogenated methanes and hepatotoxicity. MC was determined to be the least hepatotoxic of the halogenated methanes examined. The only injury described was a mild inflammatory response associated with lethal MC concentrations. These studies demonstrated that liver was not the primary target organ for the acute toxicity of MC.

Weinstein et al. [Ex. 7–181] examined the hepatic effects of MC on female mice who were continuously exposed for up to 7 days to MC concentrations of up to 5000 ppm. Mild, nonlethal injury to the livers was noted, characterized by balloon degeneration of the rough endoplasmic reticulum (RER), transient severe triglyceride accumulation (fatty liver), partial inhibition of protein synthesis and breakdown of polysomes into individual ribosomes. The injury is similar to a mild form of carbon tetrachloride toxicity (a structural analog of MC) and suggests that although the toxicity due to MC is not as severe as that produced by carbon tetrachloride, the mechanism of toxicity may be similar.

In subchronic experiments more severe effects were observed in the liver after continuous exposure. MacEwen et al. [Ex. 7–14] studied the effects of continuous exposure of mice, rats, dogs and rhesus monkeys to 1000 and 5000 ppm MC for up to 14 weeks. Fatty liver, icterus, elevated SGPT and ICDH were reported in dogs at both concentrations. These effects appeared at 6–7 weeks of exposure to 1000 ppm MC and at 3 weeks of exposure to 5000 ppm. Monkeys were less sensitive to hepatic injury, and showed no changes in liver enzymes and only mild to moderate liver changes at 5000 ppm MC. No liver alterations were detectable in monkeys exposed to 1000 ppm MC. Mice and rats developed liver toxicity at both exposure levels, characterized by increased hemosiderin pigment, cytoplasmic vacuolization, nuclear degeneration and changes in cellular organization.

Hepatic effects associated with chronic MC exposure were observed in lifetime cancer bioassays in three rodent species: rats, mice and hamsters. In studies conducted by the NTP and Dow Chemical Co., rats were exposed to inhalation concentrations of MC from 50 ppm to 4000 ppm 6 hours per day, 5 days per week [Exs. 7–8, 7–151, 7–173]. Hepatic effects were observed after exposure to MC concentrations as low as 500 ppm. These effects were characterized by increased fatty liver, cytoplasmic vacuolization and an increased number of multinucleated hepatocytes. At higher doses (greater than 1500 ppm), increased numbers of altered foci and hepatocellular necrosis became apparent.

Serota et al. [Ex. 7–180] administered 5 to 250 mg MC/kg body weight to rats in drinking water. Hepatic toxicity similar to that observed in the inhalation studies was reported at doses from 50 to 250 mg/kg.

In mice, the chronic hepatic effects of MC were investigated in two bioassays: NTP [Ex. 7–8] and Serota et al. [Ex. 7–179]. In the NTP study, mice were exposed by inhalation to 2000 or 4000 ppm MC. Cytologic degeneration was observed in both male and female mice and increased incidences of hepatocellular adenomas and carcinomas were found at both concentrations. The carcinogenic effects of MC are described in greater detail above, in the discussion of MC carcinogenicity.

In a drinking water study, Serota et al. found that mice exposed to 50 to 250 mg/kg/d MC had dose-related increases in the fat content of the liver (a sign of liver toxicity). Although some proliferative hepatocellular lesions were identified in this study, they were distributed across all exposure groups. Hepatocellular tumor incidences were not elevated above historical control incidences.

In the hamster, Burek et al. [Ex. 7–151] found minimal treatment-related changes in the livers of the MC-exposed animals after exposure to 500, 1500 or 3500 ppm MC. A dose-related increase in hemosiderin was found in male hamsters at 6 months and at 3500 ppm at 12 months. No other changes in liver physiology were reported.

OSHA believes that these studies demonstrate that the rodent liver is not sensitive to acute affects of MC, but that chronic exposure to MC caused toxic effects in rat and mouse liver and cancer in mouse liver. These studies appear to have been well conducted and the differences in toxicity observed across studies were likely due to differences in dose or route of exposure. The hamsters appeared to be insensitive to liver toxicity. OSHA believes that this is most likely due to inherent species differences in response to toxicants.

b. Human studies. OSHA evaluated epidemiological studies and case reports to determine the extent of hepatic effects detected after exposure of humans to MC. Liver toxicity was measured as alterations in the blood levels of any of several normal liver enzymes in these studies.

i. Epidemiological studies. In a cross-sectional analysis of the health of workers in an acetate fiber production plant in which workers were exposed to 140 to 475 ppm MC, Ott et al. [Ex. 4–33c] reported statistically significant increases in serum bilirubin and alanine aminotransferase (ALT) (also known as serum glutamic pyruvic transaminase (SGPT)) when compared with a reference group of industrial workers. The elevation in bilirubin levels showed a dose-response relationship, but the ALT levels were not associated with MC exposure. The authors felt that the increase in ALT in MC-exposed workers could not be attributed to MC because a dose-response relationship was not demonstrated and, therefore, the increase in ALT between the exposed and reference populations could be disregarded as a sign of liver toxicity. The authors concluded that although bilirubin elevation may be interpreted as a sign of liver toxicity, this interpretation was not supported by alterations in other liver parameters. OSHA feels that ALT cannot be disregarded as unrelated to MC exposure based on the lack of dose response within the exposure group. The high variability of this parameter and the low numbers of individuals within certain exposure subgroups (e.g., 10 men exposed at 280 ppm), make a dose-response relationship more difficult to demonstrate. Any mistake made in the characterization in an exposure group would result in obscuring the dose-response relationship. Although the evidence is not unequivocal, OSHA believes that the elevated bilirubin coupled with the elevated ALT values indicate suggestive evidence of a hepatotoxic response to MC exposure in this worker population.

In an update to the study described above, Cohen et al. [Ex. 7–75] found 4 cases of liver/biliary duct cancer in workers with more than 10 years of exposure to MC and after 20 years from first hire. Further description of this study can be found in the discussion of MC carcinogenicity, above.

In an English translation of a 1968 Czechoslovakian study, Kuzelova et al. [Ex. 7–26] found no liver enzyme abnormalities in workers exposed to MC concentrations from 29 ppm to 4899 ppm for up to two years. In contrast, in an English translation of a German study which focussed on neurological changes due to MC exposure, Hanke et al. [Ex. 7–195] observed pathological liver function tests and hepatomegaly (enlarged liver) in 4 of 14 floor tile setters examined. These workers were chronically exposed to MC at concentrations as high as 400 to 5300 ppm. The average tenure of employment of these workers was 7.7 years. The authors of the Hanke study noted that although MC with its impurities could be responsible for the liver damage, the evidence was not conclusive. OSHA has determined that there is insufficient evidence from the Kuzelova and Hanke studies to conclude that MC causes chronic human hepatotoxic effects.

ii. Case reports. In addition to the cross-sectional analyses of worker morbidity described above [Exs. 4–33c and 7–26], the relationship of MC exposure and hepatotoxicity has been studied by analysis of case reports. Welch [Ex. 7–73] collected 144 case reports of clinical disease reported subsequent to occupational MC exposure. Quantitative exposure estimates for individuals were unreliable, but the presence of MC in the work environment was ascertained for each employee. The most prevalent findings in these case reports were CNS symptoms, upper respiratory syndrome and alterations in liver enzymes. The patterns of alteration in liver enzymes were not consistent among individuals, but may be suggestive of a MC-associated hepatotoxic effect. One case of hepatitis of unknown etiology was identified. The case physician believed

that the hepatitis was secondary to solvent exposure. The solvents to which this employee was exposed included xylene and methylethyl ketone as well as MC. OSHA believes that the confounding solvent exposures in the hepatitis case and the unknown exposure histories of the individuals with altered liver enzymes limit the interpretation of these studies. OSHA has determined that these case reports provide insufficient evidence to conclude that MC was the causative agent in these cases.

Analysis of cases of fatal and near-fatal human exposures [Exs. 7–18, 7–19] indicated no apparent acute alterations of liver function. Acute concentrations of MC which caused narcosis and even death were not associated with changes in liver enzymes.

OSHA concludes that limited evidence supports the hypothesis that MC causes human hepatotoxicity, based on the data in the Ott study. The remaining studies and case reports do not provide clear evidence of a causative role of MC in hepatotoxicity. The Agency has set the exposure limits based on cancer and CNS effects and has not reached final conclusions on this issue.

4. Reproductive Toxicity

There are only limited data available regarding the potential adverse teratogenic or reproductive effects due to MC exposure. Teratogenicity studies have been conducted in rats and mice and limited epidemiology and case reports have been described for humans.

a. Animal studies. A study [Ex. 4–5] using chicken embryos indicated that MC disrupts embryogenesis in a dose-related manner. Since the application of MC to the air space of chicken embryos is not comparable to MC administration to animals with a placenta, the exposure effect seen in the chick embryos can only be considered as suggestive evidence that an effect may also occur in mammalian systems.

The teratogenicity of inhaled MC has also been studied in rats and mice [Exs. 7–20, 7–21, 7–22]. In 1975, Schwetz et al. [Ex. 7–21] conducted a study on Swiss Webster mice. Mice were exposed to 1250 ppm MC for 7 hours/day, on days 6–15 of gestation. On day 18 of gestation, Caesarian sectioning of dams was performed. A statistically significant increase in mean maternal body weight (11–15%) was observed in dams exposed to 1250 ppm MC; however, food consumption was not measured. The only effect on fetal development associated with MC exposure was a statistically significant increase in the number of fetuses which contained a single extra center of ossification in the sternum. The incidence of gross anomalies observed in the MC-exposed fetuses was not significantly different from that in the control litters. Maternal COHb level during exposure reached 12.6%; however, 24 hours after the last exposure, COHb had returned to control levels.

In the same study by Schwetz et al. [Ex. 7–21], Sprague-Dawley rats were exposed to 1250 ppm MC via inhalation for 7 hours daily on days 6–15 of gestation. No MC-associated effects were observed in food consumption or maternal body weight. Among litters from MC-exposed dams, the incidence of lumbar ribs or spurs was significantly decreased when compared to controls, while the incidence of delayed ossification of sternebrae was significantly increased compared to controls. No increased incidence of gross anomalies were observed in the fetuses from exposed rats compared to fetuses from control litters. No MC-associated effects were observed on the average number of implantation sites per litter, litter size, the incidence of fetal resorptions, fetal sex ratios or fetal body measurements, in the 19 litters that were evaluated. As observed in the MC-exposed mice, there was significant elevation of the COHb level in the dams, but the level returned to control values within 24 hours of cessation of exposure.

In 1980, Hardin and Manson [Ex. 7–22] evaluated the effect of MC exposure in Long-Evans rats after inhalation of 4500 ppm for 6 hours/day, 7 days/week prior to and during gestation. Four exposure groups were described. The first group was exposed to MC for 12 to 14 days prior to gestation and during the first 17 days of pregnancy. The second group was exposed to MC only during the 12 to 14 days prior to gestation. The third group was exposed to MC only during the first 17 days of pregnancy. The fourth group (control group) was exposed only to filtered air. The purpose of this study was to test whether MC exposure prior to and/or during gestation was more detrimental to reproductive outcome in female rats than exposure during gestation alone.

In rats exposed to MC during gestation, there were signs of maternal toxicity, characterized by a statistically significant increase in maternal liver weights. The only fetal MC effects observed were statistically significant decreases in mean fetal body weights. No significantly increased incidence of skeletal or soft tissue anomalies was observed in the offspring.

In 1980, Bornschein et al. [Ex. 7–224] tested some of the offspring of the Long-Evans rats from Hardin and Manson's study described above. All four treatment groups were used to assess the postnatal toxicity of MC exposure at 4500 ppm. The general activity measurements of groups of 5-day old pups showed no exposure-related effects. At 10-days of age, however, significant MC-associated effects were observed in both sexes in the general activity test. These effects were still apparent in male rats at 150-days of age. This study showed that maternal exposure to MC prior to and/or during pregnancy altered the manner in which the offspring react and adapt to novel test environments at up to 150-days of age. These effects suggest that MC exposure prior to, or during pregnancy may influence the processes of orientation, reactivity, and/or behavioral habituation. No changes in growth rate, long-term food and water consumption, wheel running activity or avoidance learning were reported.

OSHA concluded from the animal studies that maternal exposure to high concentrations of MC during pregnancy may have some adverse effects on the offspring, in particular with regard to behavioral effects. The Agency has set the exposure limits based on cancer and CNS effects and has not reached final conclusions on this issue.

b. Human studies. Limited data have been collected on the reproductive effects of MC in male workers. In a study reported in the Occupational Safety and Health Reporter [Ex. 7–43], a greater risk of male sterility was found in male workers exposed to MC. In 1988, Kelly [Ex. 7–165] reported 4 cases of oligospermia in MC-exposed workers. This study was described in detail in the NPRM. Although the study provided some evidence of an effect of MC on male fertility, the observations were based on a small number of cases and OSHA believes that more research is necessary before causative conclusions can be drawn about the human male reproductive toxicity of MC.

The reproductive and developmental effects due to MC exposure in female workers have also been studied. According to information reported in an English translation of an abstract of a Russian article by Vozovaya et al. [Ex. 7–16], detectable levels of MC were found in the blood, milk, embryonal, fetal and placental tissues of nursing women exposed to MC in a rubber product plant. No other information was provided in the abstract. In a study by Taskinen et al. [Ex. 7–199], increased rates of spontaneous abortions were observed in female pharmaceutical

workers exposed to MC. Exposure data were not reported in this study and it is unclear what confounding factors or other chemical exposures were present. OSHA believes that more research is necessary in order to evaluate the potential effect of MC on pregnancy outcomes, and so has not reached a conclusion on this issue.

Carbon monoxide has well known adverse reproductive effects in humans. Since MC is metabolized to CO, OSHA was concerned about the adverse reproductive effects of CO as a metabolite of MC. The EPA has reviewed the literature on the effects of maternal CO exposure on the development of the fetus in the Air Quality Criteria for Carbon Monoxide [Ex. 7–201]. Very high maternal CO exposures have resulted in fetal or infant death or severe neurological impairment of the offspring. CO reduces the amount of oxygen available to the tissues. The developing fetus is very sensitive to these effects. According to Fechter et al. [Ex. 7–200], low levels of CO exposure in animals have been shown to adversely affect the fetus, producing CNS damage or reduced fetal growth. These effects suggest that the fetus may be especially sensitive to the toxic effects of MC through its metabolism to CO.

As described above, OSHA is sufficiently concerned about the potential for reproductive health effects of carbon monoxide as a result of MC metabolism that it has decided to continue to gather information and revisit this issue, if warranted.

F. Conclusion

OSHA's determination that MC is a potential occupational carcinogen was based primarily on the positive findings of chronic inhalation bioassays in rodents. MC is carcinogenic to mice of both sexes, producing lung and liver neoplasms. In rats, MC produced dose-related increases in mammary tumors and increases in the number of tumors per tumor-bearing rat. The evidence in rodents is supported by epidemiologic findings from cellulose triacetate fiber production workers and a case-control study of individuals with astrocytic brain cancer. The study of fiber production workers suggests an association between liver and biliary cancer and long term (greater than 10 years) exposure to MC. The case-control study indicates an association between risk of astrocytic brain cancer and occupational exposure to MC. This evidence is further supported by the findings of genotoxic activity of MC in bacterial and mammalian cell systems. OSHA has set the 8-hour TWA PEL of 25 ppm primarily to protect employees from the risk of cancer due to MC exposure in the workplace.

CNS depression has been demonstrated in humans and animals at relatively low inhalation concentrations of MC. The CNS depression observed in those studies was relatively mild, although the effects occurred at concentrations in the range of the STEL of 125 ppm. OSHA believes that the STEL will be protective against CNS depression for most employees exposed to MC most of the time, but the Agency is sufficiently concerned about the potential for CNS health effects at concentrations below the STEL and have decided to continue to gather information and revisit this issue, if warranted.

VI. Quantitative Risk Assessment

Summary

After examining all the available data, both animal and human, and both quantitative and qualitative, OSHA has concluded that MC is a multi-species, multi-site carcinogen in various rodent species, and is likely to be so in humans, and that it most probably acts via one or more genotoxic metabolite(s). The evidence for this conclusion is quite strong: there exist several positive bioassays with low background incidence and dose-related increases; there is an unusually large amount of mechanistic information; and there are several positive epidemiological studies and no negative epidemiological studies of sufficient power to rule out the animal-based potency estimates.

Furthermore, OSHA has conducted a quantitative risk assessment based on the highest-quality animal tumor data, constructing a state-of-the-art physiologically-based pharmacokinetic (PBPK) model incorporating rodent and human metabolic information. That analysis shows a final estimate of risk of 3.62 deaths per 1000 workers occupationally exposed to 25 ppm MC for a working lifetime. [An alternative analysis, which incorporated all of the data used in the main analysis plus the assumption that human enzymes are even less active to MC (as compared to mice) than that predicted by the main analysis, gave a risk estimate of 1.23 deaths per 1000]. Both estimates are clearly well above any plausible upper boundary of the ''significant risk'' range defined by the Supreme Court, used by OSHA in its prior rulemakings, and reported in the scientific/economic literature on risk. The estimated risk at the current PEL of 500 ppm is 126 excess cancers per 1000 workers; clearly, the 25 ppm standard will effect a substantial reduction in a very high risk. The Final Economic Analysis shows that the average risk at current exposure levels is approximately 7.6 deaths per 1000 and ranges up to 126 per 1000; at post-regulatory exposure levels (which account for the fact that the action level will encourage some employers, where feasible, to lower exposures below 25 ppm), average risk is estimated to be 1.7 deaths per 1000 (and nowhere higher than 3.62 per 1000 risk at the new PEL of 25 ppm)—also a substantial reduction of a highly significant risk.

Prior to the October 1995 record reopening, there was strong evidence to support the determination that MC is a human carcinogen, using well-established risk assessment models based on substantial biologically-based evidence and theories: there were two multi-site positive bioassays with dose-response trends and low background, and suggestive epidemiology with no clearly conflicting epidemiology. The only question was whether to use an administered-dose scaling or a PBPK model.

Data submitted in the reopening of the record in late 1995 shed light both on the hazard identification and the quantitative risk assessment. Studies of isoenzyme activity and intracellular distribution across species were interpreted by the Halogenated Solvents Industry Alliance (HSIA) to suggest that MC is not a human carcinogen. OSHA has concluded that the HSIA interpretation of the studies is not supported by the evidence. There are numerous methodological problems with the studies: for example, in the experiment in which Graves et al. examined MC-induced mutations [Ex. 123], OSHA agrees with Dr. Douglas Bell [Ex. 126–26] that insufficient numbers of doses and mutants were examined to reach any conclusions whatsoever regarding differences in mutation spectra between chemicals.

More importantly, OSHA and most commenters agreed that the data showed a quantitative—and quantifiable—difference between mice and humans, not an infinite, qualitative one. In other words, there is substantial evidence that humans and mice metabolize MC similarly, only at different rates. HSIA's qualitative argument rests on two questionable assumptions, both of which are contradicted by other data: first, that the DNA single strand break assay is infinitely sensitive—but the investigators do not even know if it is sensitive enough to show the 7-fold difference in enzyme activity between mice and humans that OSHA's main

PBPK analysis uses; and second, that the human isoenzyme most active against MC, although clearly present in human cells, is located in a different part of the cell. This interpretation: 1) contradicts some basic beliefs of comparative physiology (Why would the cell structures of humans and mice be so fundamentally different?); 2) would require OSHA to do a ''subcellular PBPK analysis'' to predict risk—no one has ever developed, let alone parameterized and validated, such a model; and 3) contradicts other data on activation by mouse cytosolic preparations—MC has been shown to have enhanced mutagenicity in bacterial and mammalian cell preparations when mouse cytosolic preparations were used to metabolize the MC. This requires metabolism by cytoplasmic (not nuclear) GST and for the metabolites to be stable enough to cross membranes and interact with DNA.

Therefore, the new studies do not cast doubt on the MC hazard identification—in fact, they should probably increase the level of concern because it is now more clear that MC is likely to act by a genotoxic mechanism [animal tests are most relevant to humans when clear genotoxic agents are involved] and that that pathway exists in humans, and may be concentrated in cells of concern in human cancers, such as the bile duct epithelium. OSHA notes that an epidemiologic study of cellulose triacetate fiber workers has shown a statistically significant increase in biliary duct tumors [Ex. 7–260].

On the other hand, the new data did reinforce OSHA's decision to proceed with a PBPK-based risk assessment and helped OSHA to incorporate the best available scientific data into a PBPK model. Here OSHA presents two PBPK-based risk analyses, both of which represent substantial refinements over the applied-dose risk assessment and over previous PBPK analyses. OSHA's final risk assessment incorporates all reliable data—OSHA's alternative analysis, in addition to the data in the final risk assessment, also incorporates some suggestive/sparse data found in new studies. As stated above, both analyses estimate risks at 25 ppm well in excess of any possible boundary line between significant and insignificant risk.

Both of OSHA's PBPK analyses made two major advances: 1) the use of non-independent Monte Carlo simulation—Monte Carlo simulation is a well-developed computational technique that allows the modeler to take estimates of uncertainty in each of the many variables in a complex model and generate a quantitative estimate of the total uncertainty in the result. Others have used Monte Carlo simulation in PBPK modeling, but OSHA added information on the covariance structure of all the parameters, so that the uncertainty estimate would not be biased (exaggerated, probably) by incorrectly assuming that all the variables could simultaneously be at their lowest or highest values; and 2) the use of Bayesian analysis—this allows uncertainty distributions to be better estimated (narrowed) by cross-checking them against other independently-collected data from laboratory experiments, rather than simply guessing how big the uncertainties are and not refining the estimates as the model runs.

Both these advances enabled OSHA to strike a balance between two unsatisfactory extremes—a) the extreme overconfidence of using estimates for each variable that did not allow for any uncertainty—or b) the extreme ''underconfidence'' of assuming that all uncertainties are independent of each other and of other laboratory data. The result is an analysis that tells what science knows and does not know about the relationship between ambient concentrations and the putative relevant dose measure (concentration of GST metabolites in the target organ) in mice and humans.

Again, OSHA's final risk assessment regards the very limited human data base on GST–0 activity [a total of 39 liver samples and 5 lung samples] as useful, but insufficient to discard the traditional ''allometric'' assumption (the well-validated assumption that, as a general rule, metabolic parameters scale proportional to a function of the animal's body weight). OSHA's alternative analysis accepts the limited human data at face value to extrapolate without using allometry. OSHA has concluded that the main analysis is better supported by available evidence than is the alternative analysis, but both yield significant risks. An important caveat is that both models are strictly applicable to humans who are physiologically similar to the six subjects analyzed by Dow (see the discussion later in this document for a fuller explanation). Since the population of 200,000 workers will be much more heterogeneous than those six subjects, we regard these estimates as ''overconfident''—some workers exposed at 25 ppm will have higher risks than 3.6 per 1000 (although some may have lower risks as well).

Introduction

OSHA performs quantitative risk assessment, when information permits, to help determine the Permissible Exposure Limit (PEL) for toxic substances (contingent on the feasibility determination). The first step of assessing risks to human health is hazard identification. This step results in the determination that an exposure to a toxic substance causes, is likely to cause, or is unlikely or unable to cause, one or more specific adverse health effect(s) in workers. This identification also shows which studies have data that would allow a quantitative estimation of risk.

If studies are available that contain information regarding the amount of exposure and disease, mathematical modeling allows extrapolation of the information in the study to conditions of concern in the workplace. OSHA uses these risk estimates to determine whether exposure results in significant risk, and whether the standards considered by OSHA substantially reduce the risk.

This section describes the record evidence received during the public rulemaking concerning OSHA's quantitative risk assessment and the reasons OSHA has maintained or modified its opinion from the proposal. In the following sections, the evidence supporting and casting doubt on the hypothesis that MC is a probable carcinogen (the ''Hazard Identification'' issues) is discussed first. Then the results of OSHA's quantitative risk assessments, conducted to estimate the carcinogenic potency of MC, are discussed.

A. Methylene Chloride Hazard Identification

Animal and human evidence, summarized in the health effects section, indicates that MC can cause cancer, cardiac effects, central nervous system damage and other health effects. As described in the NPRM, OSHA's preliminary quantitative risk assessment was based on cancer and relied on rodent bioassay data for quantitation of risks. In 1986, the National Toxicology Program (NTP) concluded that the mouse bioassay data provided ''clear evidence'' of carcinogenesis in male and female mice, based on the liver and lung tumors. The NTP also determined that the rat mammary tumors observed in the bioassay provided clear evidence of carcinogenesis in female rats and some evidence of carcinogenesis in male rats. This evidence of cancer in multiple species and in both sexes underlies the concern for MC as a potential human carcinogen. On the basis of these studies, IARC has classified MC as a 2B carcinogen, the EPA has classified MC as a B2 carcinogen and NIOSH has

classified MC as a potential occupational carcinogen. OSHA concurred with these assessments.

Animal bioassays are a critical tool in determining the potential hazard of a substance for humans. Virtually all of the toxic substances that have been demonstrated to be carcinogenic in humans are also carcinogenic in laboratory animals. Although it is possible that a substance may be carcinogenic in a laboratory species, but not in humans, it is reasonable to suspect that substances that cause cancer in multiple animal species and at multiple target organ sites would be carcinogenic in humans. Therefore, in the absence of sufficiently powerful negative epidemiological studies or mechanistic studies demonstrating that the purported carcinogenic mechanism of action of the substance is irrelevant to humans, OSHA and other federal agencies rely on well-conducted, high-quality bioassays as the primary basis for their hazard identification and risk assessment. This is the case with MC.

During this rulemaking, some commenters have supported and others have questioned the hazard identification of MC as a potential human carcinogen. Most recently, some commenters contested the relevance of the mouse bioassay data for extrapolating to human cancer risks. Although these issues were raised by some rulemaking participants earlier in the rulemaking process, they were most thoroughly explored in connection with the information received by the Agency in late 1995. On October 24, 1995, OSHA reopened the MC record to receive comments on several studies submitted to the Agency by the Halogenated Solvents Industry Alliance (HSIA) pertaining to the mechanism of action of MC carcinogenesis in mice, and the implications of these studies for estimating human risks. The record closed on November 29, 1995, but was reopened in order to give the public additional opportunity to comment on the submitted studies. The record then closed on December 29, 1995. Thirty-seven comments were received on this topic and reviewed as part of this rulemaking.

The papers submitted by the HSIA consisted of a cover letter [Ex. 117], an overview of the sponsored research [Ex. 118] and seven research papers on the mechanism of MC carcinogenesis [Ex. 119–124A]. The hypothesis under investigation in these seven studies was that the pathways of MC metabolism and the mechanism of carcinogenesis in the mouse represented a unique situation that would not take place in humans, making the mouse unsuitable as the basis for extrapolating risks of cancer to humans. The specific studies are described briefly here and the comments received during the reopening of the rulemaking record are discussed in detail below.

1. Summary of Studies Submitted by HSIA

Exhibit 119 ''Methylene Chloride: an inhalation study to investigate toxicity in the mouse lung using morphological, biochemical and Clara cell culture techniques,'' J.R. Foster, T. Green, L.L. Smith, S. Tittensor, and I. Wyatt, Toxicology 91 (1994) 221–234.

This study investigated the potential role of MC as a mouse lung carcinogen via non-genotoxic mechanisms and the Clara cell as the cell of origin in mouse lung cancer. The hypothesis was that MC acts specifically to produce toxicity (vacuolation) in Clara cells which leads to cell proliferation and production of mouse lung tumors. The authors investigated the toxicity of MC in bronchiolar Clara cells by measuring the production of vacuoles after exposure to MC. The investigators also measured DNA synthesis in Clara cells isolated from mice exposed to MC as a measure of cell proliferation.

The authors observed a transient vacuolation of bronchiolar Clara cells in mice exposed to 2000 and 4000 ppm MC, but not in mice exposed to 0, 125, 250, 500 or 1000 ppm MC. When the mixed function oxidase (MFO) pathway was inhibited, the bronchiolar cell vacuolation observed after exposure to 2000 and 4000 ppm MC was reduced. Inhibition of the glutathione S-transferase pathway (GST) had no effect on Clara cell vacuolation. The researchers also found that exposure of mice to 1000 ppm MC or greater for 6 hours induced an increase in DNA synthesis in Clara cells cultured *in vitro* from exposed animals.

Clara cells are present in mice, rats and humans, but appear to be more abundant in mice than other species. Clara cells contain enzymes for both the MFO and glutathione S-transferase (GST) pathways of MC metabolism. According to the authors, the results of this study suggest that metabolism of MC via the MFO pathway induces a transient toxicity in Clara cells and a transient increase in DNA synthesis.

Exhibit 120 ''Methylene chloride-induced DNA damage: an interspecies comparison,'' R.J. Graves, C. Coutts and T. Green, Carcinogenesis, vol. 16 no. 8 pp. 1919–1926, 1995.

This study investigated the role of MC as a mouse carcinogen via a genotoxic mechanism of action. The hypothesis under investigation was that MC is metabolized to a genotoxic carcinogen via the GST pathway to different extents in different species and that expression of this genotoxicity correlates with risk of developing cancer across species. The authors used production of single strand (ss) DNA breaks as a measure of genotoxicity. The researchers measured DNA ss breaks in lung and liver cells from mouse, rat, hamster and humans. They observed increased DNA ss breaks in mouse liver cells, after *in vivo* exposure to 4000–8000 ppm MC for 6 hr and in mouse lung cells after exposure to 2000–6000 ppm MC. Depletion of glutathione in the liver (after administration of buthionine sulfoximine) reduced the amount of ss breaks observed. No increase in ss breaks was observed in Clara cells isolated from mice exposed to MC *in vivo*. However, in experiments on isolated mouse Clara cells, the authors observed increased DNA ss breaks in cells exposed to concentrations of MC of 5 mM and above.

No increases in ss breaks above control levels were detected in rat livers after exposure to 4000 ppm for 6 hr or in rat lungs after exposure to 4000 ppm for 3 hr. Increases in ss breaks were also not detected in hamster and human liver cells after exposure to MC *in vitro* at concentrations up to 90 and 120 mM.

In Chinese hamster ovary (CHO) cells, MC plus mouse liver cytosol (which contains the GST enzymes) also induced ss breaks, while incubation of CHO cells with MC in the presence of mouse liver microsomes (which contain the MFO enzymes) did not increase ss breaks.

The results suggest that mouse liver and lung cells are more susceptible to MC-induced ss breaks than cells from rats, hamsters or humans. Assuming that ss breaks are a relevant surrogate for carcinogenicity, the authors infer from this study that humans, rats and hamsters are insensitive to MC-induced liver cancer, because those species lack the high level of GST metabolic activity to MC found in the mouse liver cell and lung Clara cell.

Exhibit 121 ''Isolation of two mouse theta glutathione S-transferases active with methylene chloride,'' G.W. Mainwaring, J. Nash and T. Green, Zeneca Central Toxicology Laboratory, 1995.

This study was conducted in order to characterize the mouse GST isozyme(s) responsible for MC metabolism. The results of this work could be used to explore the hypothesis that a particular GST isozyme was responsible for metabolizing MC to the carcinogenic metabolite and that there may be different concentrations of this enzyme across species.

The researchers used a variety of chromatography methods to isolate two mouse glutathione S-transferases (MT–1 and MT–2, also known as T1–1* and T2–2*, respectively) which metabolize MC, comparing the observed enzyme activity with that described in rats. Rats were found previously to have two GST isomers in the theta class (GST 5–5 and GST 12–12) which metabolized MC. The mouse MT–1 and MT–2 enzymes were found to be closely related to rat GST 5–5 and 12–12, respectively, and the specific activity of mouse MT–1 was found to be similar to rat GST 5–5. GST 12–12 and MT–2 were found to be extremely labile during purification, and so the specific activities of those isozymes have not been measured.

The results of this study suggest that the mouse and rat contain GST theta enzymes similar in amino acid sequence and in specific activity (GST 5–5 and MT–1). The authors postulate that the greater conjugating activity seen in mice in other studies is ''probably due to a difference in expression of the enzyme or to a significant contribution from MT–2'' [Ex. 121].

Exhibit 122 ''Mouse Liver glutathione S-Transferase Mediated Metabolism of Methylene Chloride to a Mutagen in the CHO/HPRT Assay,'' R.J. Graves and T. Green, Zeneca Central Toxicology Laboratory, 1995.

This study investigated the mutagenicity of MC as a potential carcinogenic mechanism of action. The purposes of this study were to clarify the ability of MC to act as a mutagen, because studies in mammalian systems have yielded mixed results regarding the mutagenicity of MC, and to more fully characterize the metabolite purportedly responsible for MC mutagenicity by comparing the results to formaldehyde (one metabolite of MC by the GST pathway). Mutagenicity was measured by assaying CHO cells *in vitro* for mutations at the HPRT locus of DNA. Ss DNA breaks were also monitored. Cells were exposed in culture to MC mouse liver cytosol metabolites (which include metabolic enzymes for the GST but not the MFO pathway), formaldehyde (one of the MC GST metabolites) or 1,2-dibromoethane (1,2-DBE) (a reference genotoxin).

Using standard techniques, MC GST metabolites were shown to be weakly mutagenic using the CHO/HPRT assay. Formaldehyde was also determined to be weakly mutagenic in this assay, but the effect was not as great as with MC GST metabolites. 1,2-DBE, as expected, showed a potent mutagenic response. The mutagenicity of MC GST metabolites and formaldehyde was increased when cell density was increased, cells were exposed in suspension rather than as attached cultures and cytosol concentration was optimized.

MC mouse liver cytosol metabolites were observed to increase ss DNA breaks in CHO cells exposed in suspension, but caused only marginal increases in DNA-protein cross-links. In contrast, the researchers found that formaldehyde induced both DNA ss breaks and DNA-protein cross-links. Slight increases in ss DNA breaks were also seen with exposure to either MC alone or the cytosol fraction alone.

Based on a comparison of the mutagenic effects of the three compounds, particularly on the lack of MC-induced DNA-protein cross-linking in this experimental system, the authors concluded that formaldehyde does not play a major role in MC mutagenicity. Accordingly, the researchers viewed the results of this study as supporting the hypothesis that the DNA ss breaks induced by MC, and the resultant DNA mutations, are caused by interaction of S-chloromethyl-glutathione (formed by the GST pathway) with DNA.

Exhibit 123 ''DNA Sequence Analysis of Methylene Chloride-Induced HPRT Mutations in CHO Cells: Comparison with the Mutation Spectrum Obtained for 1,2-Dibromethane and Formaldehyde,'' R.J. Graves, P. Trueman, S. Jones and T. Green, Zeneca Central Toxicology Laboratory, 1995.

The purpose of this study was to describe the types of mutations induced by MC in order to further characterize the GST metabolite likely to cause MC mutations and therefore perhaps be responsible for the carcinogenicity of MC in the mouse. The spectrum of mutations in the HPRT locus of CHO DNA induced by MC plus mouse liver cytosol was compared to mutations induced by formaldehyde (a GST metabolite of MC) or 1,2-dibromoethane (1,2–DBE, a reference genotoxin).

The results were expressed as a sequence analysis of 11 MC-induced mutations, 6 formaldehyde-induced mutations and 13 1,2–DBE-induced mutations. In comparing the distribution of types of mutations, the results suggested to the researchers that formaldehyde-induced DNA damage can contribute to MC mutagenicity, but that the majority of the mutations were derived from other types of DNA damage, probably via an interaction of S-chloromethylglutathione with DNA. The researchers noted that a glutathione conjugate also plays a role in the mutagenicity of 1,2–DBE. The increases above background mutation frequency detected through this study were 24.7-fold for 1,2–DBE, 4.7-fold for formaldehyde, and 8-fold for MC.

Exhibit 124 ''The distribution of glutathione S-transferase 5–5 in the lungs and livers of mice, rats and humans'' [Preliminary communication, T. Green, 1995].

Exhibit 124A ''The distribution of theta class glutathione S-transferases in the liver and lung of mouse, rat and human.'' G.W. Mainwaring, S.M. Williams, J.R. Foster and T. Green,1995.

The preliminary communication [Ex. 124] and the unpublished report which followed [Ex. 124A] summarized the results of a study comparing the inter- and intra-cellular distribution of the messenger RNA (mRNA) for a glutathione S-transferase (GST) isoenzyme which metabolizes MC in the lungs and livers of mice, rats and humans. The purpose of the experiments summarized in these reports was to describe the distribution of the mRNA for the GST theta isozyme believed to be responsible for metabolism of MC to a carcinogenic metabolite in different species. The researchers believed that differences in distribution of the mRNA for this isozyme would correlate with differences in distribution (and activity) of the isozyme itself, and might explain differences in sensitivities of the species to the carcinogenicity of MC.

The distribution of GST theta mRNA was visualized using DNA oligonucleotide anti-sense probes complementary to the nucleotide sequences for the GST theta isozymes. This technique is used to visualize the mRNA coding for a specific protein (such as the GST theta isozymes) within cells in tissues. The mRNA is a nucleotide sequence transcribed from the DNA containing the gene for the specific protein. After transcription, mRNA is transported to the cytoplasm, where it is translated into the amino acid sequence which becomes the specific protein (in this case, the GST theta isozyme). The finished protein then migrates to its final site of activity within the cell. Localization of the mRNA does not necessarily correspond to localization of the specific protein.

The results of the study showed that the GST-specific mRNA could be found in lungs and livers of all three species. Mouse liver cells (particularly the nuclei) and mouse lung cells appeared (from the photomicrographs shown in the article) to stain more heavily for the GST mRNA than the lung or liver cells from rats or humans. Although the amount of GST-specific mRNA was not quantified in this study, the authors interpreted the photographs to suggest that, ''* * * mouse tissues are stained

much more heavily than sections from either rat or human.'' Based on the intracellular and intercellular distribution of the GST mRNA, the authors stated,

> The most significant findings are the presence of very high concentrations of GST 5–5 mRNA in specific cells and nuclei of mouse liver and lung. Metabolism of methylene chloride at high rates and within nuclei to a reactive but highly unstable glutathione conjugate is believed to facilitate alkylation of DNA by this metabolite. The lack of high or nuclear GST 5–5 concentrations in rat and human tissue, provides an explanation for the lack of genotoxicity in these species. [Ex. 124]

In the letter submitting the studies summarized above to OSHA, HSIA characterized the studies as follows:

> This research, which is now complete, shows that B6C3F1 mice * * * are uniquely sensitive at high exposure levels to methylene chloride-induced lung and liver cancer, and that other species, including humans, are not at similar risk. [Ex. 117]

They went on to conclude:

> As a result of this research program, it appears that there are no foreseeable conditions of human exposure in which the carcinogenic effects seen in mice would be expected to occur in man. * * * The risk assessment that is the basis for the methylene chloride standard, which is in turn based on the increased liver and lung tumor incidence observed in the mouse bioassay, must be discarded in favor of scientific data that are relevant to human risk.

In response to the request by HSIA, OSHA has reviewed the cancer hazard identification of MC based on all of the evidence in the MC record, with particular emphasis on the validity of the conclusion stated immediately above. This review is presented below.

2. Carcinogenesis of Methylene Chloride

a. Animal evidence. Several long-term MC bioassays have been conducted and are summarized in the Health Effects section. These included studies in which the route of exposure was inhalation [Burek et al., Ex. 4–25, Nitschke et al., Ex. 7–29, and NTP, Ex. 4–35] and two studies in which the route of exposure was drinking water [National Coffee Association, Exs. 7–30, 7–31]. In order to ensure full consideration of the data, OSHA analyzed in its preliminary assessment all data sets which showed an elevated incidence of tumors in a MC-exposed group, compared to controls, whether or not the elevation of tumor response was statistically significant. This analysis and the individual datasets used were described in detail in the NPRM.

In the NTP bioassay [Ex. 4–35], groups of 50 nine-week old $B6C3F_1$ mice of each sex were exposed by inhalation to 0, 2000 or 4000 ppm MC. Groups of 50 eight-week old F344/N rats of each sex were exposed to MC at concentrations of 0, 1000, 2000, or 4000 ppm. The inhalation exposures were administered 6 hours a day, 5 days a week for 102 weeks. Food was provided to the animals ad libitum except during the exposure periods, while water was available at all times via an automatic watering system. All animals were observed twice a day for mortality and moribund animals were sacrificed. Clinical examinations were performed once a week for 3.5 months, then twice a month for 4.5 months, and once a month thereafter. Each animal was also weighed weekly for 12 weeks, then monthly until the conclusion of the study at 102 weeks. All animals were necropsied and histologically examined. Three different neoplastic lesions were observed to have significantly increased incidence over the controls: adenomas and carcinomas of the lung in male and female mice, adenomas and carcinomas of the liver in male and female mice, and mammary gland fibroadenomas and fibromas in male and female rats.

HSIA and others argued that benign tumors, especially the mammary tumors in the rats, should not be counted as a carcinogenic response. The NTP has addressed that issue in its Technical Report [Ex. 4–35] and has concluded that the benign mammary tumors observed in the F344 female rats are ''clear evidence'' of carcinogenicity and noted that such tumors may proceed to malignancy. OSHA agrees with this determination and has considered the rat mammary tumors as part of its cancer hazard identification for MC. However, OSHA's quantitative risk assessment does not consider rat mammary tumor responses.

OSHA believes that the NTP studies provide the strongest evidence of carcinogenicity of MC in animals. Many commenters and hearing participants [Exs. 19–46, 7–128, 7–126, 25–E, 126–11,126–12, 126–16 and others] supported the use of the NTP mouse study as the basis for quantitative risk assessment. There are several reasons for this described in the proposal and earlier in this document. In brief, the NTP study used well established standard operating procedures that are generally considered a predictor of a potential carcinogenic response in humans. This study was also replicated by a second partial bioassay, conducted by NTP, in which groups of female mice were exposed to 2000 ppm MC for 2 years. Statistically significant increases in alveolar/bronchiolar and hepatocellular tumors were observed [Ex. 27].

Before the 1995 record reopening, some commenters had raised specific arguments why a mouse study might not predict human carcinogenic response to MC. Mr. Krenson of Besway Systems [Tr. 397, 9/17/92] objected to OSHA using the NTP mouse study as the basis for setting the PELs for MC. He believed that the mouse was irrelevant to human risk because the doses used were ''extremely high'' and that he believed that tests conducted on rats, hamsters and human epidemiological investigations showed ''no conclusive proof of cancer in human beings.'' OSHA disagrees with Mr. Krenson's conclusion. In general, high doses in rodent bioassay studies are appropriate to elicit a response due to the practical limitations on the number of animals that can be used in a study. In MC, there was no observed acute toxicity at the levels used in the study, which is an indication that the doses were not too high. Use of high doses in bioassay studies is common and its practical necessity has been affirmed by numerous expert bodies, including several committees of the National Academy of Sciences. In addition, for every known human carcinogen, positive results were obtained at high rodent doses. Also, quantitative comparisons, as conducted by Allen and Crump in 1988, demonstrate that, in general, observations of cancer potency from epidemiology studies agree with estimates of potency derived from rodent bioassay data. In the case of MC, statistically significant excess tumors were observed in mice after exposure to only 2000 ppm, or only four times the former PEL of 500 ppm (8-hour TWA), and excess tumors were seen in rats at 4000 ppm. This level is within the range of human exposures experienced in occupational settings. Certainly the lower exposure showing substantial effect was not ''extremely high'' in relation to the exposure limit, as Mr. Krenson claimed.

The HSIA and several others [Exs. 117, 126–1, 126–3, 126–5,126–6,126–8,126–10, 126–13,126–20, 126–21, 126–29] also objected to using the mouse data as the basis of human risk assessment, based on the mechanism of action studies submitted to the Agency by HSIA on December 6, 1995. OSHA's analysis of the individual studies follows, but overall, the Agency has determined that the mouse cancer data are appropriate for assessment of the cancer risks to humans (although, as discussed later in this section, OSHA has made extensive use of the submitted data to modify the quantitative

estimates of risk derived from the mouse model).

b. Evidence pertaining to the mechanism of action of methylene chloride. Several lines of evidence relate to the mechanism of carcinogenesis of MC. The issues discussed in the papers submitted by the HSIA and subsequent comments can be divided into those pertaining to genotoxicity, those discussing potential non-genotoxic modes of action, and those related to the enzymatic metabolism of MC. Although some comments overlap these divisions, this organization is used in this discussion to simplify consideration of the issues.

(1) Genotoxicity. It has not been conclusively demonstrated that MC or its metabolites act by a genotoxic mechanism in mice and rats. Substance-specific DNA adducts, which are among the strongest evidence of direct genotoxicity, have not been identified from MC exposure. However, evidence has been accumulating that MC is likely to be carcinogenic through a genotoxic mechanism of action. For example, DNA-protein cross-links have been demonstrated in mouse liver [Ex. 21–16], increases in unscheduled DNA synthesis have been demonstrated in mouse lung [Ex. 126–25] and other evidence of MC metabolite interaction with mammalian DNA (such as increases in ss DNA breaks) has been observed. It is not necessary for a substance to bind covalently with DNA in order to act via a genotoxic mechanism, although evidence of covalent binding is a strong indication of genotoxicity. In the case of MC, although the reactive metabolites are presumed to exert a genotoxic effect by binding to DNA, no MC metabolite-DNA adducts have yet been identified. However, RNA adducts have been identified after MC exposure, which supports the hypothesis that MC acts by a genotoxic mechanism. Substance-specific DNA adducts have also not been identified for some other carcinogens which are presumed to act via a genotoxic mechanism.

In addition, as discussed in the Health Effects section, MC has been found to be mutagenic in bacterial, yeast, Drosophila and mammalian systems; associated with chromosomal aberrations in CHO cells; and associated with sister chromatid exchanges in mammalian cell culture systems, such as CHO and V79 cells.

Investigations of the role of metabolites of the GST pathway in the bacterial mutagenicity of MC found that in glutathione-deficient strains of *Salmonella typhimurium* MC-induced mutations were reduced [Ex. L107]. Mutation rates returned to normal when bacteria were supplemented with exogenous glutathione. This study supports the hypothesis that MC may act as a genotoxic carcinogen via its GST metabolites, although a study of similar design by Dillon et al. [Ex. 21–89] did not replicate these results.

(i) MC induced mutuations. Studies on the MC mechanism of carcinogenesis included two studies on the mutations induced by MC in the CHO/hypoxanthine phosphoribosyl transferase (HPRT) assay. In the 1995 study by Graves et al. [Ex. 122], the investigators compared mutations induced by MC with those induced by formaldehyde and 1,2-dibromoethane. The authors characterized the results of the studies as follows:

> Using the CHO/HPRT assay we have shown that MC is metabolized to a mutagen by mouse liver cytosol in a reaction which is dependent upon GST and GSH. Mutagenicity was enhanced by exposing the cells at high density in suspension rather than as attached cultures, which is consistent with the critical metabolites being extremely short-lived.

The authors also observed that the MC-induced mutations were associated with an increase in DNA ss breaks. They remarked, ''The results suggest that MC-induced DNA ss breaks seen in other cell types are associated with DNA damage which can lead to mutation.''

In a follow-on to the CHO/HPRT study, Graves et al. [Ex. 123] conducted a sequence analysis of HPRT mutations in CHO cells, comparing the spectrum of MC-induced mutations with those induced by 1,2-dibromoethane or formaldehyde. The investigators analyzed 28 HPRT mutations: 13 from 1,2-dibromoethane experiments, 6 from formaldehyde experiments, and 11 from MC experiments. The authors characterized their results as follows,

> All three compounds induced primarily point mutations, with a small number of insertions and deletions. * * * The mutation sequence results for MC suggest that formaldehyde may also play a role in MC mutagenesis, although the majority of mutations arise from other types of DNA damage, probably DNA adducts formed by reaction of S-chloromethyl glutathione with DNA.

Dr. Douglas A. Bell of NIEHS [Ex. 126–26] had specific comments regarding the study on the mutation spectra [Ex. 123]. He stated,

> This experiment is extremely weak scientifically and not of publication quality. It is unlikely that such a naive experiment could detect differences in spectra between the different chemicals tested. To test the hypothesis that there are chemical specific mutation spectra requires analysis of hundreds of mutants at several different doses. This exhibit contains no useful information for risk assessment.

OSHA agrees with Dr. Bell that there are serious methodological problems with the paper. The Agency also agrees with Dr. Bell that the important information in these two studies is that MC increases the mutation frequency, showing a clear genotoxic effect.

(ii) Single strand DNA breaks. In a 1995 study, Graves et al. [Ex. 120] investigated the role of MC exposure in development of single strand (ss) DNA breaks in the lung and liver of mice and rats and in hamsters and human cell cultures. The authors observed a transient, dose-related increase in DNA ss breaks in mouse hepatocytes after inhalation exposure to MC. No increased amount of ss breaks was observed in rat liver cells exposed to MC as compared to control cells. The authors also reported a decrease in the amount of ss DNA breaks in liver and lung when a glutathione depletor was administered to mice immediately before MC exposure.

In mouse and rat hepatocytes incubated with MC, the authors found increases in ss breaks, but no increases in ss breaks in hamster or human hepatocytes exposed in vitro were observed. No increase in DNA damage was observed in CHO cells exposed to MC plus mouse liver microsomes, while MC plus mouse liver cytosol induced detectable ss DNA breaks.

The authors characterized their findings in the lung as follows:

> Here we show that Clara cells are also sensitive to MC-induced DNA ss breaks and that the DNA-damaging metabolites are derived from the GST pathway. * * * Overall, these findings support the proposal that Clara cells are the cell of origin of MC-induced mouse lung tumors.

For liver cancer, the investigators concluded:

> These studies suggest that humans (and rats and hamsters) are insensitive to MC-induced liver cancer.

Commenters raised issues about the relevance and utility of ss DNA breaks in assessing the genotoxicity of MC. Dr. Karl T. Kelsey [Ex. 126–34] and Dr. Miriam Poirier [Ex. 126–37] raised concerns about the sensitivity of the DNA ss break assay for detecting genotoxic effects.

Specifically, Dr. Kelsey stated,

> Reviewing the literature, considerable weight seems to fall upon the measure of DNA single strand breaks. I have serious concerns about this assay. It is well known that the assay is extraordinarily difficult to standardize and is sensitive only to very high doses of genotoxic compounds. This data,

therefore, is certainly not compelling; persuading any competent independent scientist of its relevance to humans would be difficult.

Dr. Poirier was concerned with the sensitivity of the DNA single strand break assay and the relevance of DNA ss breaks to carcinogenesis. She remarked that ss DNA breaks and mutagenicity are secondary indicators of DNA damage. She indicated that a better measure of genotoxicity would be formation of DNA adducts. Dr. Errol Zeiger [Ex. 126–28] of NIEHS agreed, stating,

If the mechanism of carcinogenicity is through an alkylating S-chloromethyl GSH complex, there should be evidence of DNA adducts *in vitro* and *in vivo.*

OSHA agrees that DNA adducts are strong evidence of genotoxicity and that ss DNA breaks and mutagenicity are not as specific or relevant as indications of a genotoxic mechanism of action. However, the Agency has determined that, even in the absence of identified MC-specific DNA adducts, the accumulated evidence suggests that MC interacts with DNA via a genotoxic mechanism of action and that the GST pathway is a plausible carcinogenic pathway.

Dr. Melnick [Ex. 126–33] stated, ''* * * it has not been demonstrated that the carcinogenicity of MC in mice is dependent solely on the induction of DNA single strand breaks.'' Dr. Andrew G. Salmon concurred with this analysis and also raised a serious concern about the ability of the assay even to detect increases in ss breaks, regardless of their relevance:

Green's account states that ''mouse hepatocytes were * * * 20-fold * * * more sensitive to the effects of methylene chloride [i.e., DNA strand breaks] than rat hepatocytes * * *'' and no breaks were detected in hamster or human liver cells. This is translated in the discussion to an assertion that not only humans and hamsters but also rats are completely immune to the carcinogenic effect of methylene chloride. However, the data simply do not support the assertion of a categorical difference as proposed by the HSIA. This particular work also raises a number of other issues, such as whether the liver is an appropriate model tissue, and whether single-strand breaks are an appropriate indicator of the type of genetic damage produced by the putative genotoxic metabolites of methylene chloride.

OSHA agrees that the ss DNA break assay is not as sensitive as other methodologies for assessing the genotoxic potential of MC in different systems and therefore data from the ss DNA break study must be interpreted in a quantitative, not qualitative context, with allowance for uncertainty in assay sensitivity. It is also unclear whether ss DNA breaks are the appropriate surrogate measure for carcinogenic potential. In light of the issues raised by commenters, the Agency believes that the ss DNA break data should be interpreted with caution.

(iii) DNA-protein cross-linking. Casanova and Heck [Ex. 21–16] observed DNA-protein crosslinks in mouse liver, but not mouse lung, after exposure to 500, 1500 and 4000 ppm. This study indicated that metabolites of MC have the ability to interact with DNA. However, the quantity of DNA-protein crosslinks did not show a strong correlation with tumor incidence, and so the DNA-protein crosslinks were not used as a dose-surrogate for MC exposure in OSHA's risk assessment.

The Chemical Industry Institute of Toxicology (CIIT) [Ex. 126–25] submitted further evidence that MC exposure causes DNA-protein cross-links in mouse liver but not mouse lung, hamster liver or hamster lung. These investigators also observed RNA adducts in mouse, rat and human cells after incubation with MC, but DNA-protein cross links were only observed in the mice. In addition, they submitted a pharmacokinetic model which modeled the DNA-protein cross-links as the dose surrogate for MC exposure. Finally, they made extensive comparisons of their model with the PBPK model submitted by Clewell [Ex. 96] and EPA's risk assessment for MC. Dr. Roger McClellan summarized the conclusions they reached as follows,

The pharmacokinetic results suggest that at very low concentrations of DCM [methylene chloride], the yield of DPX [DNA-protein cross-links] is almost linearly proportional to DCM concentration * * *

DPX cannot be used directly as a surrogate for the internal dose in humans, however, because human hepatocytes, unlike mouse hepatocytes, do not appear to form DPX in measurable amounts in vitro. * * * These results suggest that the mouse may not be an appropriate animal model for human risk assessment due to its unusual susceptibility to DPX formation and to the fact that cell proliferation is a uniquely high-dose phenomenon that may occur only in this species.

OSHA believes that this work provides more evidence for the formation of genotoxic metabolites in mouse liver after MC exposure. However, OSHA is not convinced that the DNA-protein cross-linking is the appropriate dose-surrogate for pharmacokinetic modeling. One of the strengths of Reitz's and subsequent PBPK models was that the dose surrogate used in the modeling was linearly related to tumor incidence. That is one reason that many investigators have focused on the GST pathway, instead of the MFO pathway of metabolism as the carcinogenic pathway. As explained by Dr. Lorenz Rhomberg [Ex. 126–16],

* * * if this proportionality in the case of GST is broken by a deeper analysis, the rationale for focusing only on GST must be reevaluated.

Dr. Rhomberg was referring to results presented by HSIA on the distribution of GST theta isozymes within and among cells, but the same sentiment applies here; if OSHA were to abandon PBPK modeling using GST metabolites, all of the HSIA and other studies would have to be re-evaluated and considerable more research might need to be done. Finally, in the CIIT study, RNA adducts, a more direct measure of genotoxicity than DNA ss breaks, were observed in human hepatocytes after incubation with MC. The amount of RNA adducts in human cells was only about 3-fold lower than the amount in mouse hepatocytes. It is therefore clear that human hepatocytes in this system are forming genotoxic metabolites after exposure to MC.

OSHA notes that, in mouse lung, the DNA-protein cross-links were not observed, even though a clear dose-response relationship for tumors has been established at this site. OSHA is not convinced that the explanation for carcinogenesis in mice is DNA-protein cross-links in liver. Overall, it is unclear whether the interspecies difference in DNA-protein cross-linking is related in any way to the carcinogenic mechanism of action.

OSHA concludes that there continue to be strong reasons for using the mouse data as the basis for its quantitative risk assessment because there is a clear dose-response relationship in the mouse liver and lung tumor incidence data; the mouse metabolizes MC by the same pathways as humans; PBPK models have been developed which account for inter-species differences in MC metabolism; statistical techniques have been developed to quantify the uncertainty and variability in the parameters used in the PBPK models; and there are no data that demonstrate that the mouse is an inappropriate model for assessing human cancer risks. In fact, OSHA finds further evidence in the studies described above which suggest that MC acts via a genotoxic mechanism in human cells as well as in mice and rats, which further supports OSHA's use of the mouse tumor incidence as the basis for quantitative risk.

(iv) Interpreting the genotoxicity studies. Several other issues were raised regarding interpretation of the results of

these studies on the genotoxic mechanism of action of MC. NIOSH and others [Exs. 126–30, 126–11, 126–32] commented that, in general, the data presented by HSIA supported the hypothesis that the carcinogenic metabolite(s) of MC were derived from the GST pathway. They agreed with HSIA's interpretation of the data that the studies presented here helped to confirm that the mechanism of MC carcinogenesis is through one or more genotoxic metabolites of the GST pathway.

Interpretation of short-term effects in explaining chronic mechanisms of action.

Concerns were raised about the generalizability of the results of short-term genotoxicity assays to tumor incidence, especially when the observed effect is transient, as in the vacuolation of Clara cells, the appearance of ss DNA breaks in mouse liver and lung cells, etc. Dr. Mirer of the UAW [Ex. 126–31] commented,

> 1. The evidence cited concerns acute effects which appear after a few hours of high level exposure of the animal to methylene chloride vapor, or the glassware (in vitro) mixing of homogenized animal or human tissue with the solvent. In a number of studies the effect in the whole animal is transient.
>
> 2. There is no evidence to connect the acute toxic effect, or single strand breaks of DNA after acute exposure, to the chronic effect of lung or liver injury, or cancer. * * *

Dr. Maronpot [Ex. 126–22] was concerned that the vacuolation observed in Clara cells was not reproduced in the NIEHS mechanistic studies. HSIA responded to this concern by remarking that the vacuolation could only be found after single exposures to MC, and that the vacuolation of Clara cells was also associated with increased DNA synthesis in these cells. The fact that this response was only observed after single exposures to MC again raises the issue of the transience of this response and its relevance to MC carcinogenesis.

Increased cell turnover.

In these studies on genotoxicity, the authors remarked that increased cell turnover was observed in the lung (transient increase in DNA synthesis after single exposures to MC). Dr. Daniel Byrd [Ex. 126–32] also commented on the DNA synthesis issue. Citing an HSIA study, he contended that there appeared to be a common mechanism of action between the lung and the liver since increased DNA synthesis was observed in both tissues. Dr. Maronpot of the NIEHS [Ex. 126–22] disagreed, stating,

> The purported ''liver growth'' in methylene chloride-exposed mice is actually an increase in liver weight attributable to accumulation of glycogen within hepatocytes. There is no evidence of replicative DNA synthesis (cell proliferation) in the liver of methylene chloride-treated mice, and, hence, actual increases in the numbers of hepatocytes did not occur. * * * It is noteworthy that recovery to normal liver weight occurs within two weeks after cessation of exposure to methylene chloride.

OSHA agrees with Dr. Maronpot that no data in the rulemaking record show increases in liver cell proliferation as the result of MC exposure, although increased DNA synthesis was actively searched for in the NIEHS mechanistic and other studies. The increased DNA synthesis observed in mouse Clara cells is a transient phenomenon that has not been clearly linked to carcinogenesis in the mouse. In any event, cell proliferation is not necessarily related in any way to carcinogenesis and is often uncorrelated with the doses used in bioassays and the tumor rates themselves. Many substances that cause prolonged cell proliferation do not cause tumor formation and vice versa [Ex. 126–22], and many experts believe that transient increases in cell proliferation, such as seen with MC, cannot account for the carcinogenic effect. Further discussion of cell turnover as a mechanism of carcinogenicity is discussed below under ''Non-genotoxic mechanisms.''

Clara cell as the mouse lung tumor cell of origin.

Another issue raised by commenters concerned the cell of origin of the mouse lung tumors. The mouse lung has a higher proportion of Clara cells than the human lung. The investigators hypothesized that if the Clara cell were the mouse lung tumor cell of origin, the risk estimated from the mouse lung tumor data may overstate human risk because humans have fewer Clara cells, and therefore fewer potential target cells.

Green et al. have focused much of their research efforts into determining the mechanism of action of MC in mouse lung and liver. In lung tissue, as described above, they concentrated on experiments addressing the hypothesis that the mouse Clara cell is the cell of origin of the mouse lung tumors observed in the NTP bioassay. Dr. Daniel Byrd [Ex. 126–32] indicated that he believed that the data presented supported this conclusion. He stated, ''Mouse lung tumors most likely arise from damaged Clara cells, although a few pathologists continue to speculate that mouse lung tumors arise from other lung cells, such as Type II pneumocytes.''

In contrast, Dr. Maronpot of the NIEHS [Ex. 126–22] disagreed with that statement, indicating that ''* * * current belief among researchers is that mouse lung tumors arise from Type II pneumocytes rather than Clara cells.'' Dr. Melnick [Ex. 126–33] suggested that the HSIA data are not consistent with the hypothesis that the Clara cell is the tumor cell of origin. He stated,

> DNA damage was detected in lungs of mice exposed to 2000 ppm methylene chloride; however, no significant increase in DNA single strand breaks was observed in Clara cells isolated from mice exposed to 4000 ppm methylene chloride. This observation does not support the conclusion that Clara cells were the cells of origin of methylene chloride-induced mouse lung tumors.

In their paper, Graves et al. [Ex. 120] explain their results as follows,

> Attempts to measure DNA damage in Clara cells isolated from mice which had been exposed to MC in vivo were unsuccessful. * * * [I]t is possible that cells extensively damaged by MC do not survive the isolation procedure. The observation that the in vivo vacuolation of Clara cells observed after MC treatment is not seen in vitro when the cells are isolated from the damaged lungs supports this proposal.

This means that the authors could induce ss breaks in the DNA of Clara cells *in vitro,* but in mice exposed to MC *in vivo,* it is not clear that the DNA ss breaks observed in lung tissue were concentrated in the Clara cells. In fact, the authors state,

> Since Clara cells represent only 5% of the total lung cell population, the DNA ss breaks observed in vivo may not exclusively result from damage to this cell population.

OSHA believes that these issues raise serious doubts as to whether current evidence supports the determination that the Clara cell is the cell of origin of the mouse lung tumors. Although the absence of increased ss breaks is not necessarily an indication of lack of genotoxicity, the presence of ss breaks in lung tissue (and apparently not concentrated in Clara cells) reveals an inconsistency in HSIA's argument: either the ss breaks are irrelevant or Clara cells are not the cells of origin, or both. Further discussion of the issues surrounding identification of the Clara cell as cell of origin for mouse lung tumors is contained below under ''Non-genotoxic mechanisms of carcinogenesis.''

Ability of MC reactive metabolites to cross membranes.

Although no data were presented by the HSIA to address this issue directly, several of the HSIA papers and the accompanying letters postulate that the

reactive metabolites of the GST pathway are too short-lived to cross membranes. This argument is used in combination with the claim of high concentrations of the mRNA for the GST T1–1* in the nuclei of mouse cells (but not those of rats and humans) to support the contention that humans are not at risk of developing cancer after exposure to MC. The reasoning is as follows: (1) Mice are the only species to have high concentrations of GST T1–1* in the nucleus of lung and liver cells. (2) The reactive metabolites of the GST pathway are too short-lived to cross the nuclear membrane. (3) In order to produce a carcinogenic effect, reactive metabolites must be produced inside the nucleus in proximity to the DNA. (4) Because the mouse has high concentrations of these enzymes in the nucleus (and rats and humans do not), the mouse is uniquely susceptible to lung and liver cancer after exposure to MC. (5) Therefore, there is no risk of humans developing cancer after exposure to MC.

Some commenters [Exs. 126–12, 126–30, 126–33] maintained that HSIA's submitted studies do not support this argument. As discussed subsequently, the probe used in these experiments measured GST T1–1* mRNA, not the isozyme itself. There is not necessarily a correlation between the intracellular concentration of mRNA and the concentration of enzyme at a specific locus. In addition, one would expect there to be higher mRNA outside the nucleus (since that is where the enzyme is transcribed from the mRNA), even if the enzyme were subsequently concentrated inside the nucleus. Additionally, as discussed previously, some of the evidence presented by HSIA suggests that the metabolites can be generated outside the cell (not simply outside the nuclear membrane) and interact with the DNA. Specifically, Dr. Dale Hattis [Ex. 126–12] has remarked that,

> * * * as long as these reaction and detoxification processes are not infinitely fast (and in principle they cannot be infinitely fast), a finite fraction of the activated metabolite molecules must reach the DNA and react. Even though this chain of events is required by our basic understanding of the relevant kinetic processes, in this case we also have direct empirical evidence that active metabolites need not be generated in a cell's nucleus in order to reach DNA and do damage. The DNA sequence mutations of Graves and Green [Ex. 122] and Graves et al. [Ex. 123], and the DNA single strand breaks reported by Graves et al. [Ex. 120] for CHO cells were all produced by exposing mammalian cells to a tissue culture medium that had been supplemented with mouse metabolizing enzymes and methylene chloride. The active metabolites in those cases were necessarily generated *from outside of the cells*, not just in the cytoplasm of the cells that manifested the DNA damage. Therefore, the claim that the active glutathione transferase metabolite(s) must be generated in the nucleus and would be ineffective if generated in the cytoplasm is flatly contradicted by HSIA's own evidence.

HSIA [Ex. 126–29] strongly disagreed that their results should be interpreted in this way and countered as follows:

> The investigators had to use a suspension assay to maximize the concentration ratio of methylene chloride to cells to about 10^{14}, and to optimize the GST activity from mouse liver preparation. Only under these extreme nonphysiological conditions with a transformed cell line could any increase in mutation frequency be observed. There is absolutely no justification for assuming similar conditions in humans, where GST activity is absent or at very low levels in the cytoplasm and absent in the nucleus.

OSHA disagrees with HSIA, however, and finds Dr. Hattis' and the other commenters' reasoning more sound. The results of these experiments indicate that the metabolites of MC are stable enough to cross the cellular and the nuclear membrane to interact with DNA. The Agency recognizes that these are not physiological conditions, but the conditions of the experiment do support the common-sense assumption that enzymatic metabolism takes place in the cytoplasm of mouse cells and show that some fraction of the GST metabolite(s) is stable enough to cross membranes in the cell. Thus, the Agency believes that the observed tumorigenesis in the mouse is not the exclusive result of nuclear MC metabolism.

Other issues pertaining to genotoxicity.

The remaining comments on these studies focused on more general issues such as the genotoxicity of MC and other factors related to the GST metabolic pathway and MC-induced carcinogenesis. Dr. Melnick [Ex. 126–33] remarked:

> Some fundamental questions related to this mechanism and its uniqueness to mouse liver and mouse lung carcinogenesis are also not addressed by the present research. For example, why do tumors not develop in other organs in mice that also have high levels of GST theta (e.g., kidney)?

OSHA believes this is an important question that reduces the strength of HSIA's contention that the mouse responds in a unique way to MC. The investigators have attempted to explain differences in potency of MC with respect to liver and lung carcinogenesis by invoking differences in DNA repair rates and GST metabolism within the nuclei of critical cells. However, there are other tissues which, based on the HSIA hypothesis, ought to be prime candidates for carcinogenesis. The kidney, besides having high levels of GST theta, also has a slower rate of DNA repair than the liver. It would appear to be a logical site of carcinogenesis if HSIA's hypothesis is correct. OSHA believes that the lack of tumor response in this organ (and perhaps other logical sites) indicates that the hypothesis proposed by HSIA fails to account for all relevant observations.

(2) Non-genotoxic mechanisms of carcinogenesis. Non-genotoxic mechanisms of action have also been hypothesized for MC. Increased cell turnover, due to cell death caused by MC toxicity, could theoretically increase the available number of sites for mutation and subsequent tumor formation. However, there is only limited evidence of increased cell turnover after MC exposure. Casanova and Heck [Ex. 21–16] observed increased DNA synthesis in lung tissue of mice exposed to MC. Green et al. [Ex. 105] observed Clara cell vacuolation, and both studies measured increased DNA synthesis on the first day of exposure to MC, but not on subsequent days of exposure. Clara cells may be targets of MC-induced toxicity because they contain higher levels of MC-metabolizing enzymes and are therefore more likely to generate toxic MC metabolites (for example, carbon monoxide is known to poison MFO enzymes). Green et al. suggested that the Clara cell was the cell of origin of the lung tumors observed in the NTP mouse study, because of the metabolic properties of these cells and the increased cell turnover observed within a day of MC exposure (in addition to the DNA damage described above under the section entitled, ''Genotoxic mechanisms of carcinogenesis'').

Green et al. further suggested that if the cell of origin of the mouse lung tumors was the Clara cell, humans would be at substantially less risk of lung cancer, because humans have proportionally fewer Clara cells than mice do. However, OSHA believes that there is no clear evidence confirming that Clara cells were the cell of origin of the mouse lung tumors (see discussion above). Other cell types in the lung, such as the Type II lung cell, also have relatively high metabolic activity and could be the site of origin of lung tumors. These cells have not been studied separately. Further studies are needed to clarify the role of the Clara cell and other lung cell types and cells in other tissues in MC carcinogenesis.

(i) Increased cell division. In 1994, Foster et al. [Ex. 119] investigated increased cell division as the

mechanism of action of MC in mouse lung cells. Specifically, they examined the mechanism of MC action on the transient vacuolation of bronchiolar cells observed following single exposures to MC. In mice exposed to 2000 and 4000 ppm MC, they observed increased numbers of vacuolated cells in the bronchiolar epithelium. Pretreatment of mice with a cytochrome P450 inhibitor decreased the number of vacuolated cells, while pretreatment with a glutathione depletor did not. In a replication of the observation made by Green et al. and described above, the authors found increased cell division (measured as incorporation of [3H]-thymidine) in Clara cells isolated from mice exposed to 4000 ppm MC. They concluded:

> We believe that these results strongly support the supposition that the vacuolation of the Clara cells is due to a toxic metabolite produced by the CYP [cytochrome P–450] pathway of metabolism. Furthermore the most likely candidate for inducing the change is thought to be formyl chloride.

OSHA agrees that these observations indicate that increased cell turnover occurs in Clara cells of mice. This may possibly be a partial explanation of the mechanism, but only a partial one. In cases where cytotoxicity has been considered to be an explanation for risk occurring only at ''high'' doses, this argument is confined to chemicals believed to act non-genotoxically. MC is likely to be a genotoxic carcinogen, so even if cell proliferation is a factor, the genotoxic mechanism would be the primary mechanism of concern. Genotoxic carcinogens are not generally believed to have a threshold and the dose-response function is believed to be approximately linear at low doses. In addition, the study focused on one type of cell, which may not be the cell of origin for lung tumors. Carcinogenicity in humans (as well as in mice and rats) seems to originate from various cell types in various tissues.

(*3*) *Metabolism of MC.* As described above, the mechanism of carcinogenesis for MC is not known. Numerous studies over many years have explored numerous possible mechanisms and have provided substantial information regarding the metabolism and the probable metabolite responsible for the carcinogenic effect. As discussed in the Health Effects section, MC is metabolized by two pathways: the mixed function oxidase pathway (MFO) and the glutathione S-transferase (GST) pathway. Both pathways produce reactive intermediates which potentially could contribute to a genotoxic mechanism of carcinogenicity. During development of the PBPK model for MC, Reitz et al. found that tumor incidence correlated with the estimated amount of GST metabolite, as well as with the amount of parent compound administered, but not with the amount of MFO metabolite [Ex. 7–225]. The parent MC is not likely to act as a genotoxic carcinogen because it is a fairly non-reactive compound. In addition, MC blood levels in mice were lower than in rats, so if MC was the carcinogenic moiety, one would expect the risk of cancer in rats to be higher than mice, whereas the opposite was observed. Consideration of these factors has led many investigators to conclude that the GST pathway is responsible for carcinogenesis and that it is likely to produce a genotoxic carcinogenic moiety. OSHA has reviewed the data available on mechanism of action and has concluded that the most plausible assumption is that the GST pathway is responsible for the carcinogenic action of MC and that this should be taken into account in the quantitative risk assessment. This represents a case-specific departure from the default assumption that the administered dose of the parent compound is the relevant metric for exposure.

(i) Specific GST isozyme(s) responsible for MC metabolism to the carcinogenic metabolite. Recent work sponsored by the HSIA was directed at further characterization of the metabolism of MC by the GST pathway [Exs. 121, 124, 124A]. Specifically, the HSIA work on MC metabolism has focused on the isolation and description of isozymes in the GST theta class of enzymes, which HSIA believes are responsible for the metabolism of MC to the carcinogenic metabolite in mice. Mainwaring et al. have shown that the GST isomer with the greatest specific activity for MC is a member of the theta class of GST. [Ex. 121] In rats, three members of the theta class have been identified, GST 5–5, GST 12–12 and GST 13–13. In humans, two theta class enzymes have been identified, GST T1–1 and GST T2–2 and in mice, two theta enzymes have been described, GST T1–1* and GST T2–2* (also known as GST MT–1 and GST MT–2). According to Mainwaring et al. [Ex. 121], rat GST 5–5 and mouse GST T1–1* have similar specific activity toward MC and sequencing studies have shown ''* * *that rat 5–5, mouse T1–1* and human T1–1 are orthologous proteins as are rat 12–12 and mouse T2–2* and human T2–2'' [Ex. 124A].

The hypothesis under investigation in this work was that the enzyme similar to rat GST 5–5 (mouse T1–1* and human T1–1) was the critical enzyme responsible for metabolism of MC to the carcinogenic metabolite, and that differences in the interspecies intra- and inter-cellular distributions of this isozyme and differences in genotoxicity would be important for characterizing the risk of carcinogenesis after exposure to MC.

In order to examine the distribution of the GST isozymes of interest, the investigators used DNA oligonucleotide anti-sense probes complementary to three regions of the protein nucleotide sequences of rat GST 5–5, mouse GST T1–1* and human GST T1–1 to localize specific mRNA sequences in mouse, rat and human liver and lung tissue. They also used an antibody raised against rat GST 12–12 to localize the protein itself [Exs. 124, 124A]. In the full paper describing these experiments [Ex. 124A], Mainwaring characterized the results of this study, as follows:

> The mouse enzymes [T1–1* and T2–2*] were present in significantly higher concentrations in both liver and lung than the equivalent enzymes in rat and human tissues. In mouse liver, both enzymes were localized in limiting plate hepatocytes surrounding the central vein, in bile duct epithelial cells and in the nuclei of hepatocytes. In rat liver the distribution of GST 12–12 was comparable to that seen for T2–2* in the mouse. GST 5–5 was not localized in limiting plate hepatocytes or in nuclei of rat liver. The levels of human transferase T1–1 in the liver were very low, with an even distribution throughout the lobule. The GST 12–12 antibody did reveal high concentrations of this enzyme in human bile ducts. The relative amounts of the theta enzymes in the lungs of the three species followed the pattern seen in the liver, with very high concentrations in Clara cells and ciliated cells of the mouse lung and much lower levels in the Clara cells only of rat lung. Low levels of human transferase T1–1 were detected in Clara cells and ciliated cells found at the alveolar/bronchiolar junction of one human lung sample. The enzyme was entirely absent from the large bronchioles.

Mainwaring et al. concluded that:

> This study has demonstrated a highly specific distribution of the theta class GSTs 5–5 and 12–12 in liver and lung tissue from mice, rats and humans. * * *it was apparent from these studies that both the distribution and concentration of theses enzymes differed markedly between the three species. Whilst neither mRNA levels nor protein concentrations necessarily correspond to active enzyme, the distribution shown by the mRNA for GST 12–12 was quantitatively reflected by the antibody to the protein of this enzyme, suggesting that these techniques do, in this case, reflect the distribution of active enzyme. Although an antibody to GST 5–5 is not available, it is reasonable to assume that mRNA levels for this enzyme are similarly representative of the distribution of active enzyme.

An understanding of the cellular and sub-cellular distribution of GST 5–5 has provided

an explanation for the species specificity of the mouse lung and liver carcinogen methylene chloride, and has provided reassurance that humans are not at risk from exposure to this chemical.

(ii) Issues raised pertaining to metabolic studies. Many commenters commended the HSIA for providing new information on the mechanism of action of MC and for confirming previous quantitative studies of the interspecies differences in MC metabolism. However, commenters also raised several specific issues regarding the conduct and interpretation of these experiments.

Correlation of mRNA concentrations with enzyme concentrations.

Mainwaring et al. [Ex. 124A] correlated the inter- and intra-cellular distribution of the mRNA for GST 12–12 in the rat with the distribution of the antibody for GST 12–12. They stated that it is reasonable to assume that since the protein and mRNA for the 12–12 isomer have similar distributions, the protein for the 5–5 isomer would distribute in the same manner as the mRNA for the 5–5 isomer. In support of their assumption, they noted that there is 80% homology between the 5–5 and 12–12 isomer. Some commenters believed that this was not a reasonable assumption and that there was no reason to believe that the distribution of the GST 5–5 isomer protein would correlate with the distribution of the GST 5–5 mRNA simply because there seemed to be a correlation in the 12–12 isomer protein and mRNA distributions [Exs. 126–7, 126–16]. OSHA concurs with these commenters, and until there is actual measurement of the GST 5–5 protein, OSHA does not believe that the question of the actual distribution of GST 5–5 isozyme will have been settled.

More importantly, several commenters stressed that it was mRNA that was actually observed in these studies, and mRNA levels do not necessarily correspond to either protein levels or protein activity within a cell [Exs. 126–7, 126–16, 126–28, 126–30, 126–32]. Although Mainwaring et al. acknowledge this fact [Ex. 124A], the conclusions reached by the authors still suggest that measurement of mRNA is equivalent to measurement of enzyme activity. Referring to the conclusions drawn by Mainwaring et al., Dr. Lorenz Rhomberg [Ex. 126–16] commented:

> This interpretation of mRNA distribution is profoundly in error and contradicts some of the most well established and fundamental principles of molecular biology.* * * Finding mRNA in the nucleus is unsurprising and uninformative about the eventual location of the protein products. Detecting mRNA only reveals that the cell may be presumed to be manufacturing the corresponding protein.

Dr. Rhomberg was also concerned that the concentration of GST T1–1* in the nucleus of mice may be an artifact of the experimental conditions, resulting, perhaps, from a burst of mRNA synthesis. The concern that the apparent nuclear concentration of GST may be an artifact was echoed by Dr. Douglas A. Bell of the National Institute for Environmental Health Sciences [Ex. 126–26]. He stated:

> Why the [intracellular] distribution should be different among species is unclear and unusual. Differences in processing of the nuclear RNA transcript from full length pre-mRNA may be the underlying cause of this phenomenon (or perhaps there is a transcribed pseudogene that is complicating the process).

Because of the specific cellular mechanisms that would be required to concentrate a protein in the nucleus, Dr. Rhomberg [Ex. 126–16] indicated that translocation of the GST 5–5 protein to the nucleus only in mice seemed unlikely. He stated:

> It seems implausible * * * that for a series of orthologous proteins, such localization would be found in a particular species and not in other species.

OSHA agrees with the comments made by Dr. Rhomberg and Dr. Bell on this issue, and concludes that the concentration of mRNA at a particular cellular site does not necessarily correlate with concentration of the enzyme itself. OSHA believes that caution should be used when interpreting the results of these experiments.

Attribution of GST metabolizing activity to a single GST isozyme.

Concern was also raised about the validity of attributing all of the glutathione S-transferase metabolism of MC to one isomer of the theta class [Exs. 126–7, 126–12]. In particular, Dr. Dale Hattis noted that there was less enzyme activity eluting coincident with the peak identified as the 5–5 form than that eluting at pH 8, which was not believed to correspond to the 5–5 form. Dr. Ronald Brown described results from a paper by Blocki (1994) [Ex. 127–22] which showed that ''expression of the [5–5] isozyme contributes 50% of the total GST activity toward this substrate.'' This leaves the question open as to whether isozymes which may have lower specific activity for MC but which may be expressed in much greater abundance (particularly μ 4–4), could contribute as much as the remaining 50% of the total GST metabolism (see Table VI–1, reproduced below from Dr. Brown's comment [Ex. 126–7], original source Blocki et al. (1994) [Ex. 127–22]).

TABLE VI–1.—RELATIVE CONTRIBUTION OF DIFFERENT RAT LIVER GLUTATHIONE S-TRANSFERASES IN DICHLOROMETHANE METABOLISM TO FORMALDEHYDE

				Glutathione S-transferases		
				α Class	μ Class	θ Class
Comparative parameter (units)	1–1+1–2+2–2	3–3	3–4	4–4	[b] 5–5	[b] 13*k*
Specific activity (nmol/min/mg of protein)	<0.1	7	11	23	11,000	9
% Cytosolic protein (% of total in liver)	6.4	0.7	0.3	0.6	0.002	0.005
Total activity (nmol/min/g of liver protein)	<10	49	33	138	22	0.45
% Total activity[c]	<1.5	11	7	32	50	0.1

[a] Data from Meyers et al., 1991.
[b] Data for 13,000 molecular weight glutathione transferase from Blocki et al., 1992.
[c] Assuming Vmax conditions for each.

In addition, Mainwaring et al. [Ex. 124A] noted that the ''substrate specificity of GST 12–12 is currently poorly characterized,'' although the purified enzyme has no activity toward MC. As described above, these enzymes appear to be very labile upon purification. Therefore, it is unclear how much the 12–12 isomer itself may contribute to MC metabolism. As Dr. Kenneth T. Bogen stated, ''* * * while the substrate specificity of GST 12–12 may currently be poorly characterized, current data do not appear to rule out GST 12–12 specificity toward MC.''

Limited human samples and human polymorphism in the GST theta genes.

Several commenters expressed concern for the limited number of human samples (one pooled lung sample and less than 40 human liver samples have been assayed) and the potential effect of a known human polymorphism for the glutathione S-transferase theta class genes on risk estimations [Exs. 126–7, 126–16, 126–26, 126–35]. Specifically, commenters raised concerns that there may be a large subpopulation of GST conjugators who may be at increased risk from MC exposure that has not been adequately characterized in the limited number of human samples (especially lung samples) that have been tested. HSIA objected to these comments, stating,

> The human tissue data base for the metabolism of methylene chloride by the GST pathway is one of the largest, if not the largest, available for this type of risk assessment. To discount it based on arguments concerning hypothetical polymorphisms, as these commenters urge OSHA to do, would be contrary to the message consistently put forward by the National Academy of Sciences and regulatory authorities for the past decade. * * *''

In fact, the National Academy of Sciences report cited by HSIA, ''Science and Judgement in Risk Assessment'' does encourage agencies to make use of biologically-based models, but cautions that using them without adequately considering human variability would be a step backwards:

> EPA has not sufficiently accounted for interindividual variability in biologic characteristics when it has used various physiologic or biologically based risk-assessment models. The validity of many of these models and assumptions depends crucially on the accuracy and precision of the human biological characteristics that drive them. In a wide variety of cases, interindividual variation can swamp the simple measurement uncertainty or the uncertainty in modeling that is inherent in deriving estimates for the ''average'' person.

The Academy goes on to recommend specifically that making ''reasonable inferences'' about interindividual variation is *required,* rather than assuming that no such variation exists:

> Even when the alternative to the default model hinges on a qualitative, rather than a quantitative, distinction, such as the possible irrelevance to humans of the alpha-2u-globulin mechanism involved in the initiation of some male rat kidney tumors, the new model must be checked against the possibility that some humans are qualitatively different from the norm. Any alternative assumption might be flawed, if it turns out to be biologically inappropriate for some fraction of the human population.
>
> When EPA proposes to adopt an alternative risk-assessment assumption * * * it should consider human interindividual variability in estimating the model parameters or verifying the assumption of ''irrelevance.'' If the data are not available that would enable EPA to take account of human variability, EPA should be free to make any reasonable inferences about its extent and impact (rather than having to collect or await such data), but should encourage interested parties to collect and provide the necessary data.

OSHA believes HSIA has misinterpreted the NAS recommendations, and further disagrees with HSIA that the polymorphism is ''hypothetical.'' Investigators have demonstrated this polymorphism in human GST and have shown how the polymorphism varies across races [Exs. 127–7, 127–9, 127–17, 127–21, 127–23, 127–24, 127–25]. OSHA agrees with the commenters that a human polymorphism in the GST theta genes may increase concern for individuals that may be at higher risk from exposure to MC due to their genetic make-up. The Agency has considered sensitive subpopulations in the development of health standards, including this rulemaking. For example, the subpopulation of workers with silent or symptomatic heart disease was considered in assessing the cardiac risks of MC (due to its metabolism to carbon monoxide). The variation in enzyme activity raises additional uncertainty in the use of human data to support the hypothesis that mice are uniquely sensitive to MC carcinogenicity. However, for purposes of quantitative analysis, the Agency has not attempted to systematically adjust the risk estimates based on a ''high GST metabolizing'' individual because the frequency and impact of such polymorphisms have not been clearly worked out.

Target site of MC carcinogenesis in mice versus humans.

Drs. Brown and Melnick [Exs. 126–7, 126–33] also raised the possibility that the target site for MC carcinogenesis may be different in humans than in mice or rats. Specifically, research on the occurrence of theta isomers of GST in human blood was described. The characterization of GST metabolism in human erythrocytes [Exs. 127–11, 127–12] suggests the possibility of the bone marrow as a potential target of MC carcinogenesis and also the potential for metabolism in the blood and translocation of the metabolites to a variety of potential targets. The HSIA discounted human blood metabolism of MC, stating,

> The 'very high capacity to conjugate methylene chloride' mentioned by Brown is in fact very low, approximately 40-fold lower than the highest activity detected in human liver.

OSHA believes that although the specific activity in the blood may be lower than the human liver activity, the total activity of the GST enzymes in blood and marrow may be significant when one also considers the volume of these compartments. OSHA also notes that interspecies tumor site concordance is not necessarily expected, and it is prudent to consider any human tissues which have the potential to metabolize MC to the putative carcinogen.

Concentration of protein complementary to rat GST 12–12 in human bile ducts.

Dr. Bogen [Ex. 126–15] commented specifically on the human liver protein complementary to the antibody to rat GST 12–12 protein. In particular he was concerned that high concentrations of this enzyme were reported in bile ducts of the human liver. He noted,

> With regard to potential human carcinogenicity of MC relative to its known carcinogenic potential in mice, it seems to me that these particular data ought not to reduce regulatory concern, but rather ought to increase regulatory concern, in view of the fact that bile duct epithelium cells are the most likely stem cells for hepatocytes. * * * Thus hepatocellular bile-duct epithelial cells are likely to play an important role in liver carcinogenesis in both mice and humans.

OSHA agrees with Dr. Bogen's concerns and also notes that in the cohort study of textile workers conducted by Hoescht-Celanese [Ex. 7–260], an excess of biliary cancers was observed in those workers exposed to the highest concentrations of MC and those with the longest latency period between exposure and disease. If the HSIA theory is correct (i.e., a single isozyme is the culprit), then finding high levels of this isozyme in human bile duct is strong evidence implicating MC in human carcinogenesis.

Interpretation of data as qualitative versus quantitative differences.

Perhaps most importantly for the purposes of MC risk assessment, several commenters remarked that OSHA should use caution when interpreting the data from the HSIA submissions, because any interspecies differences are rightly considered first as quantitative rather than qualitative ones. In part, the commenters cautioned that one should pay special attention to the threshold of detection in all assays. As Dr. Andrew Salmon stated,

> Green and co-workers have consistently confused their inability to measure a result or parameter value due to its magnitude or frequency of occurrence being below their threshold for practical detection, with a true

zero value for the parameter or zero risk of an occurrence [Ex. 126–36].

OSHA agrees that caution should be used when attempting to characterize a difference between species as an absolute qualitative difference. A much higher burden of proof is required to support a claim of zero risk than of diminished risk. (This higher burden is due to the need to consider assay sensitivity and other factors; the fact that the consequences of incorrectly concluding that humans are at zero risk are particularly dire only adds to the already high threshold of scientific evidence needed to successfully make such a claim). In the case of MC, humans clearly have the ability to metabolize MC via the GST pathway [Exs. 21–53, 127–16]. Even if the enzyme concentration of GST T1–1* itself actually occurs only in the nuclei of mouse lung or liver (as opposed to the concentration of mRNA, which may or may not be localized differently within mouse cells), it is still unclear what impact (if any) this fact would have on the characterization of human cancer risks for MC. OSHA believes that the statement that there are absolute species differences in the activity and intracellular distribution of GST 5–5 is highly speculative and is not supported by the data presented to date, because the data presented refers to the distribution of mRNA for GST 5–5, not the enzyme concentrations or activity levels of the enzyme; there is no quantification of the intracellular levels of the mRNA or enzyme levels, only photographic representations; and there is no evidence that any potential difference in enzyme activity (when those experiments are completed) would be greater than the difference already predicted from allometric scaling considerations.

Conclusions reached by the HSIA.

HSIA concluded from these studies that because of a qualitative inter-species difference in the distribution of the GST theta enzyme responsible for MC carcinogenesis, humans would not be at risk of developing cancer under ''foreseeable conditions of exposure.'' Although some commenters agreed with the conclusions reached by the HSIA [e.g., Exs. 126–10, 126–13, 126–20], many commenters strongly disagreed with this interpretation of these data pertaining to the risk assessment for MC. These commenters [e.g., Exs. 126–7, 126–11, 126–12, 126–15, 126–16, 126–22, 126–26, 126–30, 126–36] were concerned that the question was in reality an issue of quantitation of enzyme, not a qualitative difference in metabolism. Dr. Lorenz Rhomberg commented:

The question is, is there any basis for believing that the species difference in activity suggested by the mRNA data is greater than has been previously supposed?

It should be emphasized that some degree of species difference in metabolic activity is expected even under the default cross-species extrapolation methods. That is, in keeping with the general pattern of scaling of physiological processes across species, general metabolic rates are presumed to be lower on a per unit of tissue basis in larger animals. As a default, this pattern can be presumed to apply to individual metabolic pathways as well, although data on species-species activities can be used in place of such defaults if available.

If species-species activities are discovered by experiment to be less in humans than in mice to the degree already anticipated by allometry, then the experiments are simply confirming the default and no change in the human risk estimates is warranted. If humans have a metabolic activity different than the allometric prediction, the incorporation of such estimates into PBPK models can show different human risks from those predicted under the default. The allometric prediction is that, on a per unit of tissue basis, humans should have about 7-fold lower activity than mice and about 4-fold lower activity than rats.

Given the limit of detection of the assay methods, human metabolic activity (or mRNA levels) only a bit less than the allometric expectation of 7-fold less than mice are often difficult to distinguish from zero. That is, claims that humans have no activity (or no mRNA production) in certain tissues must be judged in the light of the fact that only a small change from the already acknowledged allometric difference can often make the human activity undetectable. A 20-fold mouse-human difference, for example, really only represents a 3-fold exaggeration of the 7-fold allometric pattern, yet many assays may fail to reliably characterize a 20-fold difference as a quantitative difference rather than a qualitative difference.

For the above reasons, claims that human metabolic activity in activating methylene chloride are so low as to be essentially qualitatively different than mice should be interpreted with great caution. In fact, existing assays have great difficulty in detecting species differences in metabolic activity great enough to markedly challenge existing risk assessments.

Another commenter discussed the fact that cellular levels of the GST 5–5 isoenzyme would be expected to be distributed unevenly across cells, putting some cells at greater or lesser risk. This would tend to average out over a tissue and would be best described by tissue metabolism data. Other commenters remarked that there was no need to adjust the risk estimates based on these studies because current pharmacokinetic models already account for interspecies differences in metabolism. Although OSHA has incorporated data from these studies, especially in its ''alternative analysis,'' OSHA agrees with Dr. Rhomberg and the other commenters who have taken exception to the HSIA conclusions.

The Agency does not accept the HSIA characterization of the results of the summarized studies. OSHA has determined that no evidence has yet been presented that demonstrates that humans are not at risk of developing cancer after exposure to MC. At most, the presented studies suggest a quantitative inter-species difference in MC metabolism, which was established in previous scientific reports and is already accounted for by PBPK modeling. As discussed extensively in this document, OSHA has concluded that HSIA has undervalued certain strong evidence and has overemphasized some more speculative hypotheses. However, as is clear from this discussion OSHA has carefully considered all of the evidence. Substantial evidence in the record clearly supports OSHA's conclusions. Consequently, OSHA's approach of relying on the NTP mouse tumor data as the basis of its quantitative risk assessment continues to be the best approach to risk estimation.

c. Conclusions regarding the carcinogenesis of MC. The HSIA submitted these documents to OSHA with a request that the Agency consider the mouse tumor data in light of these additional studies and reject use of the mouse tumor response data as the basis of the Agency's quantitative risk assessment. OSHA believes it has given proper weight to all the evidence, giving greater weight to that which is of the highest scientific quality. However, in light of HSIA's request, the Agency reopened the rulemaking record and reviewed all the new data. After submitting these documents for review, the HSIA [Ex. 126–29] remarked on comments submitted to the docket by other scientists,

In general, the comments submitted by R. Maronpot, R. Brown, L. Rhomberg, K. Bogen and D. Hattis exhibit a reluctance to use the large body of mechanistic data now available in assessing the potential carcinogenic risk posed by methylene chloride, even though most other commenters agree that the pathway responsible for its observed carcinogenicity in mouse liver and lung, as well as species variations in activity of this critical pathway, have now been identified. Much of the comment addressed here appears to be motivated by a desire to maintain the ''status quo'' for assessing carcinogenic risk based on default principles that were developed twenty years ago.

The HSIA goes on to say,

Many of the conclusions reached by the commenters * * * are based, often erroneously, on single aspects of one or the other of these publications, rather than on the entire data base, as a ''weight of evidence'' approach would demand and as is necessary to understand the results.

OSHA finds it difficult to understand why HSIA believes that the scientists they listed are primarily interested in preserving the ''status quo.'' Dr. Maronpot conducted the mechanistic studies on MC at NIEHS, which have generated mechanistic information useful to the risk assessment process. Dr. Rhomberg was instrumental in developing the pharmacokinetic approach used by the Environmental Protection Agency in its risk assessment of MC (an approach never used by the Agency previously). Dr. Hattis, Dr. Bogen and Dr. Brown are all experts in the application of pharmacokinetic modeling to risk assessment and have repeatedly called for incorporating more mechanistic and physiological data into pharmacokinetic models. These highly respected scientists, among others, reviewed the HSIA submissions critically and independently and reached conclusions different from those of the HSIA, conclusions which themselves depart significantly from the ''status quo.'' This does not suggest to OSHA that they are trying to preserve some status quo in risk assessment, and OSHA finds nothing in the comments of these experts to suggest that this is the case.

In order to respond to HSIA's desire to have OSHA further review all of the data, the Agency has reviewed each submitted study carefully and critically on its own merits to determine how each piece of data fits into the overall picture of the mechanism of action for MC. OSHA believes that in this process the critical issues raised by the HSIA have received a full airing and the hazard identification and the risk assessment for MC have been improved because of it. OSHA believes, however, that looking *only* at the new studies submitted by HSIA, and examining them uncritically, would contradict every principle of scientific analysis.

In summary, in order to accept the HSIA's supposition that MC is not carcinogenic in humans, one must believe the following:

1. GST 5–5 is the only isozyme which can metabolize MC to the carcinogenic metabolite.

2. DNA single strand breaks are relevant and a sufficient measure of the tumorigenicity of a compound.

3. The absence of detectable increases in DNA ss breaks in a single experiment means that there are in fact no additional ss breaks.

4. The limited number of human samples (one sample of pooled lung tissues being the absolute extreme of ''limited'' data) used to determine metabolic parameters are truly representative of the range of human variability.

5. An apparent correlation in the distribution of the GST 12–12 protein and GST 12–12 mRNA means that the distribution of GST 5–5 protein will correlate similarly with the distribution of GST 5–5 mRNA.

6. Visual interpretation of photomicrographs staining for GST mRNA gives a true and accurate measure of GST activity in the cell.

And one must also ignore the following contradictory observations and conclusions about the mechanism of action (in addition to ignoring the suggestive epidemiologic evidence):

1. Metabolites of GST can cross cell and nuclear membranes and interact with DNA to induce DNA ss breaks and mutations.

2. GST mRNA and protein stain heavily in human bile duct cells (believed to be precursors of hepatocytes).

3. Human lung tissue has been shown to stain for GST mRNA.

4. Only 50% of the GST metabolism of MC can be accounted for by the GST 5–5 isozyme.

5. The metabolic capacity of GST 12–12 for MC has not been characterized.

OSHA concludes that these studies, even putting aside all technical objections to the methodology and interpretation of individual studies, do not change the conclusion that substantial evidence supports the carcinogenicity of MC. The bioassay results in mice are still qualitatively and quantitatively relevant to humans. Once the HSIA studies have been replicated and key components quantified (like the intracellular enzyme activity (instead of mRNA levels) of GST towards MC), the HSIA data may be useful in characterizing quantitative interspecies differences in MC GST metabolism. In particular, it would be useful to determine whether all of the evidence that HSIA submitted is consistent with an allometric difference (a difference expected based on the size of the animal) in sensitivity to MC or with a greater interspecies difference in sensitivity. (The specific activity of GST toward MC in mice is estimated to be about 7-fold that of humans, based on allometric considerations.) OSHA believes that its final risk assessment, which relies on an analysis of all available PBPK data, addresses both possible interpretations.

B. Selection of Database for Quantitative Risk Assessment

1. Animal Bioassays

The first step in performing a quantitative assessment of carcinogenic risk based on animal data is to choose a data set or sets from which to define the dose-response relationship. In its NPRM, OSHA had chosen the NTP female mouse lung and liver tumors to determine its estimates of risk. OSHA chose these responses because they provided clear dose-response relationships, had low background tumor rates and were more sensitive measures of dose-response than corresponding male mouse tumor sites.

The EPA, the CPSC and the FDA chose to use the combined incidence of adenomas and carcinomas of the lung and liver as the basis for their risk assessments. Specifically, the EPA [Exs. 25–D, 28] placed emphasis on the experimental species and sex group showing the highest risk: the number of female mice showing either adenoma or carcinoma in either lung or liver (or both). The CPSC [Ex. 25–I] pooled benign and malignant tumors of either the mammary gland, lung or liver and averaged male and female estimates to derive an overall risk estimate. The FDA [Ex. 6–1] used benign and malignant responses of female mice. The Crump report [Ex. 12] noted that it may be reasonable to combine lung and liver responses to give an indication of the potency of MC, due to the fact that metabolism of MC occurs by the same pathway in both lung and liver and thus results in the same ultimate metabolites. However, the report added that since both tissues have different background responses, combining responses may tend to complicate the interpretation of risk estimates.

In OSHA's final rule, the NTP study (rat and mouse, inhalation) was chosen for quantitative risk assessment because it provided the best toxicological and statistical information on the carcinogenicity of MC [Exs. 12, 7–127] and because the study was of the highest data quality. In the NTP study, MC induced significant increases both in the incidence and multiplicity of alveolar/bronchiolar and hepatocellular neoplasms in male and female mice. In rats, dose-related, statistically significant increases in mammary tumors were also observed. OSHA chose the female mouse tumor response as the basis of its quantitative risk assessment, because of the high quality of data, the clear dose response of liver and lung

tumors and the low background tumor incidence. Although the female rat mammary tumor response was also dose-related, the data of high quality and amenable to quantitative risk assessment, the mouse data set had a clearer dose-response in both liver and lung tumors than the rat mammary tumor response and the mouse background tumor incidence was lower than in the rat. Therefore the mouse data set was chosen for quantitative analysis.

OSHA included the lung adenomas in the quantitative analysis. The evidence suggests that the presence of benign tumors with the potential to progress to malignancies should be interpreted as representing a potentially carcinogenic response. This belief is supported by the OSTP's views on chemical carcinogenesis (50 FR 10371). OSTP stated that at certain tissue sites, such as the lung, most tumors diagnosed as benign really represent a stage in the progression to malignancy. Additionally, NIOSH, the EPA, the CPSC and the FDA have also included benign responses in their assessments. Therefore, it is appropriate and sometimes necessary to combine certain benign tumors with malignant ones occurring in the same tissue and the same organ site. In particular, OSTP also stated that ''the judgement of the pathologist as to whether the lesion is an adenoma or an adenocarcinoma is so subjective that it is essential they be combined for statistical purposes.'' (50 FR 10371).

OSHA chose female mouse lung tumors as the specific tumor site for its final quantitative risk assessment. There is no *a priori* reason to prefer the mouse lung tumor response over the liver tumor response, because both data sets were of high quality, showed a clear dose-response relationship and had low background tumor incidence. In fact, in the NPRM, the Agency reported estimates of risk generated using both sites. However, to reduce the complexity of the final PBPK analysis, which required highly intensive computations, OSHA chose one site (the female mouse lung tumor response) for its final risk estimates. The risks calculated using the female mouse liver response would likely be slightly lower than those calculated using the lung tumor response. On the other hand, pooling the total number of tumor-bearing animals having either a lung or liver tumor (or both) (which is the procedure EPA advocates [see its 1986 Guidelines for Cancer Risk Assessment]) would have yielded risk estimates higher than OSHA's final values.

The NTP study has been described in the Health Effects section and, above, in the discussion regarding hazard identification.

2. Epidemiologic Data

The epidemiology data are not as useful for quantitative risk assessment as the animal data because the animal data provide a clear dose-response, with fairly precise indices of exposure, which cannot be derived from the epidemiology data. All other things being equal, risk assessors would prefer to use epidemiologic data to assess cancer risk in humans over data from animal studies whenever good data on human risk exist. However, the uncertainty inherent in epidemiologic studies must be accounted for; in particular, ''positive'' studies often have lower confidence limits that do not rule out the no-effect hypothesis, while ostensibly ''negative'' studies often have UCLs that would support a substantial positive effect. OSHA believes (see discussion below) that the latter circumstance applies to some of the MC studies. Other factors, such as duration and intensity of a chemical exposure (which can rarely be controlled and accurately measured in an epidemiological study), difficulty in accurately defining the exposed population, and other confounding factors diffuse a study's predictive power of true risks.

Frequently, animal studies indicate a positive response to a particular chemical when epidemiologic studies of exposures to the same chemical fail to exhibit a statistically significant increase in risk. When animal studies show a substance to be a carcinogen but epidemiologic studies are non-positive, the minimum risk which could be detected by the human study should be estimated to assess the strength of the epidemiologic study and justify its importance in the risk assessment process. Similarly, the animal-based potency estimate can be used to predict the number of human deaths investigators would likely have seen in an epidemiologic study if the animal-based estimate was correct; if the observed number of human deaths is markedly inconsistent with this predicted number, the relevance of the animal-based estimate might well be called into question. If the human data are equivocal, or the epidemiologic study is not sufficiently sensitive to identify an increased risk predicted by a well-conducted animal bioassay, it is necessary to consider the animal data to protect workers from significant risk. OSHA concludes that the MC epidemiology studies do not have adequate information upon which to base a quantitative risk assessment. OSHA has, however, used the analyzed epidemiological data to determine whether the results are consistent with those estimated using the rodent models. This is discussed later in the document.

3. Conclusions

After reviewing the animal data and the quantifiable epidemiology data, OSHA has determined that the NTP female mouse lung tumor response is the appropriate data set on which to base its quantitative risk assessment, and has determined that the most scientifically-appropriate way to use these data involves constructing a PBPK model to extrapolate from animals to humans. OSHA believes that the non-positive epidemiology data, in particular those from Kodak, are of in sufficient power to rule out the risk estimates derived from the animal data.

C. Choice of Dose-Response Model

Several approaches have been used to estimate cancer risk from exposure to toxic agents. A standard approach uses mathematical models to describe the relationship between dose (airborne concentration or target tissue dose surrogate) and response (cancer). Generally, mathematical functions are fit to the data points observed at different exposure levels and these functions are used to estimate the risk that would occur at exposure levels below those observed. The shapes of these curves vary, ranging from linear extrapolations from the observed points through the origin (zero exposure and zero risk) to curves which may deviate far from linearity at the very highest or lowest doses. The use of a particular model or curve can be justified in part by statistical measures of ''goodness-of-fit'' to observed data points. That is, there are various statistical tests which measure how closely a predicted dose-response curve fits the observed data.

The most commonly used model for low-dose extrapolation is the multistage model of carcinogenesis. This model, derived from a theory proposed by Armitage and Doll in 1961, is based on the biological assumption that cancer is induced by carcinogens through a series of independent stages. The Agency believes that this model conforms most closely to what we know about the etiology of cancer. There is no evidence that the multistage model is biologically inappropriate, especially for genotoxic carcinogens, which MC most likely is. The most recent data submitted by the HSIA [Exs. 117–124A] clearly add substantial support to the previous body

of evidence indicating that one or more metabolites of MC is a genotoxic carcinogen. The low-dose linearity feature of this model is scientifically required for any exposure that confers additional risk upon a pre-existing background level of risk produced by a similar or equivalent mechanism. Given the underlying connection between DNA mutations and cancer and the obvious background incidence of cancer in the human population, the overwhelming scientific consensus is that genotoxins follow low-dose linear functions.

The multistage model is generally considered to be a conservative model because it is approximately linear at low doses and because it assumes no threshold for carcinogenesis, although there are other plausible models of carcinogenesis which are more conservative at low doses. ''No threshold'' means that any incremental amount of exposure to a carcinogen is associated with some amount of increased risk. ''Approximately linear at low doses'' means that one unit of change in dose will result in one unit of change in risk at low doses.

The most common approach for setting the parameters in the multistage model is to assume that the dose-response curve is described by a polynomial of k-1 degrees, where k is the number of dose groups tested. The multistage model thus takes the form

$$P(\text{Cancer}) = 1 - \exp(-f(\text{dose})),$$

with f(dose) given by:

$$f(\text{dose}) = a + b_1(\text{dose}) + b_2(\text{dose})^2 + \ldots + b_{k-1}(\text{dose})^{k-1}.$$

The number of stages is specified by k-1, and the parameters a (the background risk) and b_i are estimated from the observed data.

Alternatives to the multistage model include the tolerance distribution models such as the probit model, the logit model and the Weibull model. The tolerance distribution models generally predict dose-response relationships which are sigmoid in shape. Thus, these models will approach zero more rapidly than a linear multistage model. This means that at low doses, these models will predict lower risks than will a linear multistage model.

In the MC rulemaking, most of the risk assessments submitted to the Agency used the linearized multistage model to predict risk. The differences in risk estimates were not generally due to the dose-response model used, but to whether the risk assessor used pharmacokinetic modeling to estimate target tissue doses, and what assumptions were used in the pharmacokinetic modeling.

D. Selection of Dose Measure

1. Estimation of Occupational Dose

The purpose of low dose extrapolation is to estimate risk of cancer at a variety of occupational exposures. This requires that the doses be converted into units comparable to those in which the experimental dose is measured.

In its NPRM, OSHA first converted the experimental dose, measured in ppm, to an inhaled dose, measured in mg/kg/day. The female mouse body weight used in these calculations was 0.0308 kg. The breathing rate for mice was 0.05 m^3/day. The Agency then assumed that equivalent doses in mg/kg/day would lead to equivalent risk. Once the experimental dose (in mice) had been converted to mg/kg/day, it was then converted to ppm using the human breathing rate of 9.6 m^3/workday and human body weight of 70 kg in order to estimate risks at various potential exposure levels. To determine the dose to humans corresponding to the risk estimated from the mouse data, OSHA used the following equations:

$$\text{Dose}_M(\text{mg/m}^3) = \frac{\text{Dose}_M(\text{ppm})(84.9\text{g/mol})\ (1000\text{ mg})(1000\text{ L})}{24.45\text{ L/mol}\qquad\qquad (\text{g})(\text{m}^3)}$$

$$\text{Dose}_M(\text{mg/kg/d}) = \frac{\text{Dose}_M(\text{mg/m}^3)(0.05\text{m}^3/\text{d})\ (6\text{hr}/24\text{hr})(5\text{d}/7\text{d})}{(0.0308\text{ kg BW})}$$

OSHA assumed that risk estimates derived for mice at a given mg/kg/d would be equivalent to risks experienced by humans at that mg/kg/d. Doses in mg/kg/d in humans were converted to ppm to determine risk at various potential workplace exposures using the following equations:

$$\text{Dose}_H(\text{mg/m}^3) = \frac{\text{Dose}_H(\text{mg/kg/d})\ (70\text{kg})}{(9.6\text{m}^3/\text{workday})(5\text{d}/7\text{d})(45\text{yr}/70\text{yr})}$$

$$\text{Dose}_H(\text{ppm}) = \text{Dose}_H(\text{mg/m}^3)(24.45\text{L/mol})/(84.9\text{ g/mol})$$

This process was used by K.S. Crump et al. in their risk assessment submitted to OSHA [Ex. 12]. Use of mg/kg/d as a measure of dose has been criticized by Mr. Harvey Clewell, representing the U.S. Navy [Ex. 19–59]. He stated,

> Strictly speaking, the concept of a mg/kg/day dose applies only to exposures for which the term ''administered dose'' is well defined, which does not include inhalation exposure to a volatile, lipophilic chemical such as MC....If a non-pharmacokinetic dose surrogate is desired, the choice should be time-weighted average concentration (ppm) as used by the FDA.

Mr. Clewell preferred use of dose surrogates calculated in the PBPK models to estimate human risk. OSHA has given careful consideration to the issues raised by Mr. Clewell and, in the risk assessment presented here, considered dose surrogates estimated in PBPK models and time-weighted average concentration in addition to the mg/kg/d dose presented in the NPRM.

For all dose measures used to estimate human risk, the assumptions used by OSHA for body weights and exposure times and rates were those described above. In OSHA's final risk assessment, a Bayesian analysis was used and the prior distribution for breathing rate was centered on OSHA's preferred value of 9.6 m^3/d.

2. mg/kg/d Versus Other Measures of Exposure

Quantitative risk assessments based on animal data are conducted under the assumption that animals and humans have equal risks from lifetime exposures to a chemical when exposure is measured in the same unit for both species. Opinions vary, however, on what is the correct measure of exposure. For site-of-contact tumors, a ppm-to-ppm conversion is a generally accepted measure of dose. For systemic tumors, commonly used dose conversions include mg/kg/day (as used by OSHA in its MC NPRM), mg/surface area/day (with surface area approximated by $BW^{2/3}$), mg/$BW^{3/4}$/day, and mg/kg/lifetime. When adequate and appropriate pharmacokinetic or metabolic data are available, these data are sometimes used to estimate internal dose. In the case of MC, metabolic data have been gathered and pharmacokinetic models have been used by various investigators to estimate target tissue doses for MC.

Some commenters [Exs. 19–28, 19–57] had expressed concern that OSHA used a surface area correction factor in its risk assessment in the NPRM. In fact, in the NPRM, OSHA extrapolated from mice to humans based on body weight rather than surface area. However, the Agency requested comment on which species conversion factor would be appropriate to use in OSHA's final risk assessment and whether incorporation of pharmacokinetic information should influence the choice of the conversion factor. Two commenters [Exs. 19–83, 23–21] referred to the interagency document on interspecies scaling which ultimately recommends $BW^{3/4}$ as the appropriate extrapolation factor in the absence of appropriate pharmacokinetic information, although the document also indicates that extrapolation factors based on BW or $BW^{2/3}$ would also be consistent with the available data (EPA Draft Report: ''A cross-species scaling factor for carcinogen risk assessment based on equivalence of mg/$kg^{3/4}$/day.'' 57 FR 24152, June 5, 1992).

There was also considerable discussion as to whether it was appropriate to apply an extrapolation factor such as $BW^{3/4}$ or $BW^{2/3}$ in addition to PBPK modeling of dose, to account for pharmacodynamic differences between species (such as differences in DNA repair rates and other non-metabolic differences in interspecies susceptibility to an agent). The EPA applied the $BW^{2/3}$ extrapolation factor after incorporation of the PBPK data for MC in their 1987 draft update of the MC risk assessment. In their previous risk assessment, which did not incorporate PBPK data, EPA also used $BW^{2/3}$ as the extrapolation factor. Since OSHA has preferred the BW extrapolation in other chemical-specific risk assessments and has used BW as the extrapolation factor in its best estimate of risk in the NPRM for MC, OSHA agrees with Dr. Lorenz Rhomberg's assessment [Ex. 28] that OSHA should continue to use body weight as its extrapolation factor in its final MC risk assessment. Thus, OSHA's risk estimate does not make any allowance for possible pharmacodynamic differences between rodents and humans, or within the diverse human population.

3. Pharmacokinetic Modeling of Dose

OSHA discussed issues relating to the use of pharmacokinetic data in its NPRM. These issues were further explored during the hearings and in pre-hearing and post-hearing comments. In response to the ANPR [51 FR 42257], Dow Chemical submitted documentation of a physiologically-based pharmacokinetic model (PBPK) [Exs. 8–14d and 10–6a], developed for MC by Reitz and Anderson, which described the rates of metabolism of the MFO and GST pathways and the levels of MC and its metabolites in various tissues of rats, mice, hamsters and humans. This model was presented as a basis for converting an applied (external) dose of MC to an internal dose of active metabolite in the lung and liver in various species under various MC exposure scenarios. Since publication of the NPRM, several parties have submitted pharmacokinetic models or comments on modeling to the rulemaking record. These are discussed in detail below.

a. General issues in PBPK modeling. Physiologically-based pharmacokinetic modeling can be a useful tool for describing the distribution, metabolism and elimination of a compound of interest under conditions of actual exposure and, if data are adequate, can allow extrapolation across dose levels, across routes of exposure and across species. One limitation of using PBPK modeling is a widespread lack of adequate and appropriate physiological and metabolic data to define the model. In particular, difficulties arise in attempting to define a model for which the mechanism of carcinogenesis has not been established, when it is unclear whether there would be tumor site concordance across species, and when the metabolic pathway(s) responsible for carcinogenesis has not been determined.

The concentration of a chemical in air or the total inhaled dose (mg/kg/d) may not be the most biologically relevant dose to use in comparing toxicity across doses or across species. The dose measure that would be most useful in risk assessment is the dose to the target tissue of the chemical or metabolite that is known to directly cause the toxic effect. Generally, this quantity is unknown in almost every case because the proximate carcinogenic moiety is usually highly reactive, and therefore very difficult to measure in biological systems. Since the proximate toxic agent is unlikely to be a quantity readily measured in the laboratory, it is sometimes desirable to use dose surrogate concentrations, calculated by methods such as PBPK modeling, to obtain a more direct estimate of a dose-response relationship. Examples of dose surrogates that may be relevant to the toxic mechanism of action of a chemical are peak concentrations of a particular metabolite at a target tissue site, area under the concentration-time curve of a metabolite at a target site, and blood concentration of the parent chemical or a relevant metabolite.

If the dose surrogate chosen is directly relevant to the mechanism of action of a chemical, there is greater confidence in the risk estimates generated using the dose surrogate than those generated using total inhaled concentration. If the mechanism of action of a chemical is uncertain, and therefore the relevance of the dose surrogate to carcinogenicity is in question, there is proportionally less confidence in the predicted risks estimated using that dose surrogate. Risk estimates from PBPK modeling can also be limited by the quality and quantity of available metabolic data. Since risk estimates are directly dependent upon the dose or dose surrogate chosen, reliable measures of all relevant physiological parameters and all relevant metabolic pathways in all target tissues from all species under investigation are critical. In addition, measures of the uncertainty and inter-individual variability of these parameters must be generated.

In its NPRM, OSHA solicited information on the appropriateness of physiologically- based pharmacokinetic modeling for the MC risk assessment. Specifically, OSHA asked the following questions:

(a) How can pharmacokinetics be best applied to the risk assessment of MC and what are the current limitations of this approach in the quantitation of health risks? What weight should OSHA give to pharmacokinetic data in its risk assessments and why?

(b) Given that five separate risk assessments have utilized the pharmacokinetic models for MC in five

different ways (resulting in from 0 to 170 fold reduction in the final risk when compared with assessments not utilizing pharmacokinetic data), how can OSHA best utilize the existing pharmacokinetic data and still be certain of protecting worker health?

(c) Which parameters in the pharmacokinetic models are most sensitive to errors in measurement or estimation? Can an increased database reduce the uncertainties in these parameters?

(d) How much confidence can be placed in the human *in vitro* MC metabolism data, especially that for lung tissue? How will human variability in these parameters affect the extrapolation of risk from rodent species?

(e) Are there any studies in progress which attempt to verify the predictive ability of the model *in vivo*, (e.g., by giving doses in a lifetime bioassay which will produce cancer in a species other than the B6C3F1 mouse and the F344 and Sprague-Dawley rats)?

(f) OSHA recognizes the large areas of uncertainty which exist in applied dose risk assessment procedures. If pharmacokinetic modeling reduces these uncertainties, can the reduction in uncertainty be quantified? Are additional uncertainties introduced into the risk assessment process by the use of pharmacokinetic models?

(g) By using the pharmacokinetic models in the risk assessment process, one is making an assumption about the carcinogenic mechanism of action of methylene chloride. Are there any new studies on the carcinogenic mechanism of action of MC which would support or refute this assumption?

(h) If the carcinogenic process is, in fact, not the result of the metabolite(s) from the GST pathway alone, but is due to a combination of metabolites or a combination of the parent compound plus the metabolites, how would the pharmacokinetic model and the subsequent risk assessments be affected? Can these effects be quantified?

(i) One of the assumptions made in the pharmacokinetic model is that the target tissues for MC are liver and lung. Can this model predict cancer incidences at other sites? If not, is there a way to factor in consideration of possible MC-induced human cancers at other sites than liver and lung?

(j) OSHA solicits information supporting or refuting interspecies allometric scaling based on body weight or body surface area.

OSHA reviewed comments and testimony on these issues from an expert witness [Ex. 25–E]; representatives of other U.S. government agencies, including NIOSH [Exs. 19–46, 41], EPA [Exs. 25–D, 28], CPSC [Ex. 25–I] and U.S. Navy [Exs. 19–59, 96]; the State of California [Ex. 19–17]; the Halogenated Solvents Industry Alliance (HSIA) [Exs. 19–45, 19–83, 105]; and the UAW [Exs. 19–22, 23–13, 61]. Comments and testimony from the expert witness, the other government agencies and the Halogenated Solvents Industry Alliance generally reflected the opinion that the pharmacokinetic information was sufficiently developed in the case of MC to justify its use in estimating human cancer risks. The predominant view among these commenters and hearing participants was that the data collected for MC and the pharmacokinetic model developed by Reitz and Andersen adequately represented the metabolism of MC in mice. Many commenters also believed that it was reasonable to conclude that the lung and liver tumor incidence in the B6C3F1 mice was the result of the GST metabolite. As described in further detail below, OSHA generally agrees that the PBPK approach is reasonable to assess cancer risks of MC. In fact, the Agency has evaluated the submitted PBPK models, determined that there were several deficiences in each of those models, and improved upon those in its final quantification of risks.

One rulemaking participant was strongly opposed to using pharmacokinetic data in the MC risk assessment. Dr. Franklin Mirer [Ex. 61], representing the UAW, stated:

> The pharmacokinetic model advanced for methylene chloride carcinogenesis is incorrect and should not be used for quantitative risk assessment.

Dr. Mirer was particularly concerned that the PBPK model ignored the rat cancer bioassay data and that the model was based on a ''mechanistic hypothesis.''

Dr. Mirer reiterated his concerns in response to the October 24, 1995 reopening of the rulemaking record [Ex. 126–31], stating,

> The simple message is that OSHA should give no additional weight to the pharmacokinetic argument. For OSHA to give the argument any additional weight would mean that OSHA was ignoring a substantial body of evidence regarding carcinogenicity of methylene chloride in additional animal species.

Dr. Mirer continued,

> The pharmacokinetic hypothesis is unconvincing even as an explanation of the differences in lung and liver tumors in mice and rats.

OSHA shares Dr. Mirer's concerns that the mechanism of carcinogenicity for MC has not been clearly established and that using pharmacokinetic modeling may lead to risk estimates which ignore the rat tumor data. The Agency notes that it has used the NTP rat data in its hazard identification for MC. OSHA has also determined, however, that the mouse data represent the strongest data set on which to base a quantitative risk assessment, and notes that risk estimates based on the rat data (without PBPK-based adjustment of dose) are similar to OSHA's final risk estimates using mouse data and a PBPK analysis.

The determination that the mouse data set was the strongest on which to base a quantitative risk assessment was made without regard to the availability of information on pharmacokinetics. Incorporating pharmacokinetic modeling into the risk assessment for MC is a logical extension of OSHA's risk assessment decisionmaking process and reflects the Agency's review of the totality of data on tumor incidence, metabolism and mechanism of action. The extensive data base on MC metabolism and mechanism of action, although by no means complete, was the determining factor in the decision to incorporate pharmacokinetics into its final risk assessment. The Agency is aware of very few chemicals of regulatory interest for which the available data could match this body of information. The specific criteria utilized by the Agency in making this determination are enumerated below.

Comments on the specific issues enumerated above are discussed under the appropriate topics in the sections that follow.

b. Criteria for using PBPK in quantitative risk assessment. OSHA evaluated several criteria before deciding to use PBPK analysis in its final quantitative risk assessment for MC. In future rulemakings in which the use of pharmacokinetic information in risk assessment is at issue, it will be necessary to evaluate at least the criteria described below before reaching conclusions, in order to avoid adopting an alternative hypothesis that is less (rather than more) reflective of the true situation than the more generic applied-dose assumption. Further, it may be appropriate to evaluate additional criteria in some cases, depending on the metabolism and mechanism of action of the chemical. The criteria which OSHA considered before incorporation of PBPK in the final risk estimate for MC were:

(1) The predominant and all relevant minor metabolic pathways must be well described in several species, including humans. (Two metabolic pathways are responsible for the metabolism of MC in humans, mice, rats and hamsters).

(2) The metabolism must be adequately modeled (Only two pathways are responsible for the metabolism of MC as compared to several potential routes of metabolism for other compounds, such as benzene and the dioxins. This simplified the resulting PBPK models).

(3) There must be strong empirical support for the putative mechanism of carcinogenesis (e.g., genotoxicity) and the proposed mechanism must be plausible.

(4) The kinetics for the putative carcinogenic metabolic pathway must have been measured in test animals *in vivo* and *in vitro* and in corresponding human tissues (lung and liver) at least *in vitro*, although *in vivo* human data would be the most definitive.

(5) The putative carcinogenic metabolic pathway must contain metabolites which are plausible proximate carcinogens (for example, reactive compounds such as formaldehyde or S-chloromethylglutathione).

(6) The contribution to carcinogenesis via other pathways must be adequately modeled or ruled out as a factor. For example, there must be a reasonable analysis of why reactive metabolites formed in a second pathway would not contribute to carcinogenesis (e.g., formyl chloride produced via the MFO pathway is likely to be too short-lived to be important in MC carcinogenesis).

(7) The dose surrogate in target tissues (lung and liver in the case of MC) used in PBPK modeling must correlate with tumor responses experienced by test animals (mice, rats and hamsters).

(8) All biochemical parameters specific to the compound, such as blood:air partition coefficients, must have been experimentally and reproducibly measured. This must be true especially for those parameters to which the PBPK model is most sensitive.

(9) The model must adequately describe experimentally measured physiological and biochemical phenomena.

(10) The PBPK models must have been validated with data (including human data) which were not used to construct the models.

(11) There must be sufficient data, especially data from a broadly representative sample of humans, to assess uncertainty and variability in the PBPK modeling.

In the case of MC, to a large extent these criteria were met. This made evaluation of existing PBPK models and further development of the modeling strategy a viable option. Therefore, the Agency evaluated existing PBPK models and then contracted with Drs. Andrew Smith, Frederic Bois, and Dale Hattis to help OSHA improve on the MC PBPK model in the record, which would extend the application of modeling techniques beyond those models which had been submitted to the Agency and incorporate all of the data available and appropriate for quantitative analysis in the record. OSHA's evaluation of existing PBPK models, the development of a modified MC PBPK analysis, and OSHA's final risk assessment are described later in this document.

c. Choice of GST metabolic pathway as dose surrogate. The choice of ''dose surrogate'' for the MC PBPK model is a critical factor in estimating PBPK-based risks. The dose or ''dose surrogate'' used in a risk assessment should be a biologically-important quantity, should have a plausible mechanism of action at the target tissue and should correlate with the response of interest. The simplest choice of dose is the applied dose or ambient concentration of the contaminant measured as ppm or as the inhaled quantity in mg/kg/day (as used in the Preliminary Quantitative Risk Assessment in the NPRM). Such quantities have the advantage of being easily and directly measurable during the bioassay. Other meaningful dose surrogates could include the concentration of parent compound in the target organ, the concentration of specific metabolites in the target organ, the area under the time-concentration curve (integrated dose) of each metabolite and the parent compound, or peak blood or target organ levels of each metabolite and parent compound. These quantities are not as easily measured. Often only indirect measurements or computer modeling of these dose surrogates are available.

In the PBPK model developed by Reitz et al. [Ex. 7–225], the dose surrogates that correlated with the tumor response were the parent compound (MC) concentration and the amount of GST metabolites formed in the lung and liver. Reitz et al. discounted the parent compound as the dose surrogate because MC is not a chemically reactive compound and direct-acting carcinogens (and metabolites of carcinogenic compounds) are generally hypothesized to be reactive (usually, electrophilic). They also discounted the parent compound as a relevant dose surrogate because parent MC concentration was higher in the rat blood than in the mouse for any dose of MC, while the cancer response of the mouse was greater than the rat. If parent MC were the critical compound for MC carcinogenesis, one would expect the cancer response across species to correlate with blood levels of the compound.

(1) Metabolism via GST versus MFO pathway. Human metabolism of MC has been well studied. One clear finding from the human metabolic studies is that humans metabolize MC by both the MFO and GST pathways, as do mice, rats, and hamsters. Although human metabolism via the MFO pathway has been measured *in vivo* as well as *in vitro*, human MC metabolism via the GST pathway has been measured only *in vitro*. Metabolic data on the human GST pathway have been collected from several liver samples and one pooled lung sample (combined samples from four human subjects). However, it has not been possible to measure human GST metabolism of MC *in vivo*.

Reitz et al. measured the metabolic constants (K_m and V_{max}) *in vitro* for the GST and the MFO metabolic pathways. Enzyme activities were determined by measuring the conversion of ^{36}Cl-labeled MC to water-soluble products. Metabolic constants were then compared across species (mouse, rat, hamster and human). In the liver, the MFO activity was highest in the hamster, followed by the mouse, human and rat. Human values were much more variable than those of the rodent species. Human V_{max} for the liver MFO pathway ranged approximately an order of magnitude and human K_m varied approximately three-fold. GST activity in the liver was determined for mouse and human tissues only. Mouse liver had approximately 18-fold greater activity (V_{max}) than human liver, but the human tissue had about a three-fold greater affinity constant (K_m) for MC than the mouse.

In the lung, the activity of the MFO and GST enzymes was determined for a single substrate concentration. For the MFO pathway, mouse tissue had the highest activity, followed by hamster and rat. No MFO activity specific for MC was detected in the human lung tissue, although other MFO isozymes were demonstrated to be active in the tissue. For the GST pathway in lung, mouse tissue was the most active, followed by rat and human. No GST activity was detected in the hamster lung.

In humans, the MFO pathway has been measured *in vivo* as well as *in vitro* [Ex. 7–225]. Human *in vivo* experimentation was conducted by several investigators. Metabolism via the MFO pathway is relatively easy to measure because the end product is carbon monoxide [Ex. 7–24]. The metabolic rates measured *in vitro* were not similar to those measured *in vivo* after exposure to known concentrations

of MC, which means that *in vitro* measurements in human tissue (in particular for the GST pathway for which there are no human *in vivo* data) could not be used directly as a measure of metabolism. Human *in vivo* and *in vitro* MFO metabolism data were important in developing the pharmacokinetic models because they provided human data for MC-specific metabolism which could be used to help validate the models. Unfortunately, the modeling of the putative critical pathway for carcinogenesis (the GST pathway) could not be validated for humans. This is a weakness in the PBPK modeling for MC shared by all of the models, including OSHA's final PBPK analysis.

In the PBPK models submitted to OSHA, the human rate of metabolism of MC, particularly via the GST pathway, was based on data gathered from four liver samples and one pooled lung sample. Although the liver metabolic data were of the same magnitude as those collected by Green et al., Green's data were not considered in Reitz's model and the variability of those data was not assessed. Therefore, the estimates of the dose surrogates in Reitz's model were based on the average of four liver samples. Four liver samples are not nearly enough data to confidently estimate and account for human variability. Considerations of the variability and uncertainty of these data are discussed in more detail later in this document.

The human lung data were even more limited. Four human lung samples were pooled to provide a single data point. This lack of lung tissue data is particularly critical in PBPK modeling when calculating the ratios of A1 and A2 (the distribution of metabolism between liver and lung tissue in humans). Errors in calculating these ratios will significantly affect the final risk estimates, as discussed by Mr. Harvey Clewell for the U.S. Navy [Ex. 96].

HSIA submitted additional data on the human metabolism of MC in the form of a study of GST metabolism in human liver samples conducted by Bogaards et al. [Ex. 127–16]. The human GST liver metabolism data collected in this study were not directly comparable to the data collected by Reitz or Green, becausethe Bogaards data were measured using a colorimetric method which was not as sensitive as the ^{36}Cl method. Under contract to OSHA, Dr. Andrew Smith and Dr. Frederic Bois compared the data from different laboratories and collected under different methodologies and developed a correction factor across methodologies so that they could use all of the human metabolic data available in OSHA's final PBPK model [Ex. 128]. There are now over 30 data points for human liver *in vitro* metabolism by the GST pathway and 5 human lung data points (the additional lung data points were reported in Green et al., Ex. 124A). OSHA determined that it was important to use as much of the available human data in its PBPK model for MC as scientifically justifiable. These data were used to estimate the variability and uncertainty surrounding the measures of human GST metabolism. Although the methodologies differed across studies, OSHA has adjusted and incorporated all of the available human data in its PBPK model.

(2) Parallelogram approach. When the metabolic rates for the MFO pathway measured *in vivo* and *in vitro* within each species were compared, it was determined that those rates were not equivalent. This meant that, unlike the case for some other chemical compounds, the *in vitro* GST data could not substitute directly for an *in vivo* measurement of metabolism. Reitz and Andersen [Ex. 7–225] suggested a ''parallelogram'' approach to the problem of non-comparability of *in vitro* and *in vivo* rates. This approach makes the assumption that the ratio of *in vivo* to *in vitro* measurements is roughly comparable across species (including humans). They measured metabolic rates of both pathways *in vitro* and *in vivo* in rodents and then used the average ratio of the *in vitro* to *in vivo* metabolic rate in three rodent species to extrapolate from *in vitro* rates in humans [Ex. 7–225] to an estimated *in vivo* value.

BILLING CODE 4510–26–P

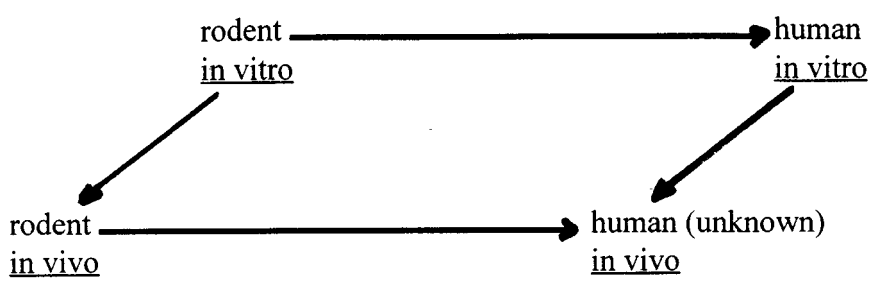

Figure VI-1: Schematic diagram of the parallelogram approach.

BILLING CODE 4510–26–C

$$\text{Assumption: } \frac{\text{rodent (in vitro)}}{\text{rodent (in vivo)}} = \frac{\text{human (in vitro)}}{\text{human (in vivo)}}$$

$$\text{or, human (in vivo)} = \frac{\text{rodent (in vivo)} \times \text{human (in vitro)}}{\text{rodent (in vitro)}}$$

Ron Brown [Ex. 25–E], an expert witness for OSHA, was concerned that ''...the methodology used to extrapolate the *in vitro* data to the *in vivo* state is problematic and the accuracy of the human *in vitro* measurement of GST activity toward MC is uncertain.'' This may be due to the small sample size, variability in the laboratory analysis or inadequacy of the *in vitro* model. OSHA believes that this is a critical point of uncertainty in using the PBPK model for risk assessment. The Agency also notes that in the risk assessments using PBPK models submitted during the MC rulemaking, none used the parallelogram approach as the basis of determining human *in vivo* metabolic rates. Instead, allometric scaling was used to estimate human values. OSHA has conducted risk assessments using both the allometric approach (OSHA's final risk estimates) and the parallelogram approach (OSHA's alternative analysis). The Agency did this in order to determine what the risk estimates would be if all possible quantitative data were used to the fullest extent, regardless of the uncertainties in the data.

OSHA agrees that evidence presented in the record generally supports the GST pathway as a plausible carcinogenic mechanism of action of MC. The Agency remains concerned, however, that sole reliance on the GST pathway may show insufficient consideration for potential contributions of the parent compound and/or metabolites of the MFO pathway to the carcinogenesis of MC. It is clear that ambient MC concentration is dose-related to tumor response. It has not been shown with any certainty that MC GST metabolites are related to tumor response across species. Thus, there is greater confidence that the lifetime bioassays predict MC carcinogenicity in humans than there is that cancer occurred through a specific mechanism, and even less confidence that the metabolic rates measured in vitro accurately measure differences in species that correlate to tumor development. This is particularly true for lung metabolism where only one pooled and five individual human samples were analyzed. Notwithstanding the uncertainties described above, the Agency believes that the hypothesis that GST is the carcinogenic pathway presents a plausible mechanism of action for MC and is sufficiently well-developed to warrant the use of PBPK modeling of the GST pathway as the dose surrogate of choice in the quantitative risk assessment for MC.

d. Structure of the MC PBPK model. The PBPK models described below are based on the model originally submitted by Dr. Reitz on behalf of HSIA in 1992 [Ex. 7–225]. Over the years since the first submission of a MC PBPK model to OSHA, significant improvements have been made in model structure and in the data collected for PBPK modeling, especially in how the uncertainty and variability in the data are treated. The general structure of the models submitted to OSHA are described below, followed by a description of the parameters used in the various models. Next follows a description of how the variability, uncertainty, and sensitivity of the models to uncertainty have been assessed, noting the improvements that have been made in developing methods to handle these issues. This is followed by a comparison of the risk estimates generated by these models. Finally, OSHA's final risk assessment is described. This risk assessment incorporates lessons learned from previous models and uses all of the available, appropriate, quantifiable data in a Bayesian approach to modeling the dose metric for MC.

In the PBPK model submitted by Dr. Reitz of HSIA [Ex. 7–225], a series of differential equations was used to model the mass balance of MC and its metabolites in five physiologically-defined compartments, including the lung, liver, richly perfused tissue, slowly perfused tissue, and fat. Metabolism via the MFO pathway was described by saturable Michaelis-Menten kinetic equations and GST metabolism was modeled using first-order nonsaturable kinetics. With the exception of the PBPK model sumitted by ICI [Ex. 14A], all of the PBPK models submitted to the Agency followed these assumptions regarding the metabolism of MC. The rate constants for the metabolic equations were estimated based on measurements of the partition coefficients, allometric approximations of the physiological constants (e.g., lung weight), and estimations (i.e., allometric scaling of rodent data, estimations made using the parallelogram approach, etc.) of the biochemical constants (e.g., Michaelis-Menten constants).

NIOSH presented a PBPK model in 1993 [Ex. 94], also structurally based on the Reitz-Andersen model, but with modifications to the human breathing rate and cardiac output to account for uptake of MC in physically active workers, rather than at-rest humans or humans involved in light activity, and including an analysis of the variability of the human metabolic parameters. Specifically, NIOSH compared estimates derived from the arithmetic average of the human GST metabolism data with the individual human liver data points to estimate the uncertainty in an individual's risk of cancer from occupational MC exposure. This approach began to incorporate some necessary features, such as a special focus on physically active workers and the variability of human metabolic parameters, but did not attempt to quantify the uncertainty and variability of the individual parameters and their contribution to the uncertainty associated with the PBPK model.

Mr. Harvey Clewell, representing the U.S. Navy, also submitted several PBPK models to OSHA. In his initial submission (1992), Mr. Clewell modified an existing PBPK model [Ex. 7–125] to include more recent data on the mouse blood/air partition coefficient [Ex. 19–59]. In a second PBPK model, he ''started from scratch'' to construct a model based on data derived from sources independent of the previous work of Reitz and Andersen [Ex. 23–14], which was described in Mr. Clewell's testimony [Tr. 2361,10/15/92]. This model was structurally similar to the model presented by HSIA with the following exceptions: it featured three lumped compartments (slowly perfused, moderately perfused and rapidly perfused) based on tissue kinetic constants rather than the earlier two lumped compartment models based on tissue blood volumes; and the mouse blood/air partition coefficient was corrected to 19.4 instead of the earlier 8.29 on the basis of more recent data. A third model submitted by Mr. Clewell was identical in structure to the Reitz/Andersen model, but incorporated the more recent experimental data on the partition coefficients and the more recent mouse metabolism data [Ex. 96]. OSHA used Mr. Clewell's third model in its comparison of PBPK-derived risk estimates because of its similarity in structure to the original Reitz model and its incorporation of the most recent experimental data.

In his third model, Clewell either derived probability distributions for each parameter from the literature or estimated distributions for those parameters for which data were not available, and conducted Monte Carlo simulations to derive output distributions for the dose surrogates. These distributions of dose surrogates were then used to derive four risk estimates: the doses input into the multistage dose-response analysis of the tumor bioassay were derived either from the mean or from the 95th percentile of the output distribution of PBPK parameters, and these in turn were coupled with the either the MLE or the UCL of the distribution of possible values of the multistage model

parameters. This analysis was an advance over that of previous models because it took into account some of the uncertainty and variability known to be associated with the data used in the PBPK model.

After evaluating these submitted models, OSHA determined that Clewell's model provided the best prototype on which to base its final PBPK modeling approach for MC. Therefore, the Agency worked with Drs. Smith and Bois to review Clewell's model and with the assistance of Dr. Hattis, to develop a refined PBPK modeling approach with a more sophisticated analysis of variability and uncertainty (and other refinements as described below). In this way the Agency developed an approach which would incorporate what was learned in the development of earlier PBPK models and make use of as much of the available physiological and metabolic data in the record as possible. Clewell's model was chosen for comparison, because this was the only model to provide a systematic analysis of the uncertainty, variability and sensitivity of the model using Monte Carlo techniques. OSHA's final risk assessment approach is described in greater detail below.

e. Choice of parameters for PBPK modeling. The definitions of the parameters used in the models described above are contained in Table VI–2. Note that not all parameters were used in each model and slightly different variable names were used by different investigators. For example, OSHA's final analysis contains a bone marrow compartment, while Clewell's model did not. OSHA refers to the blood flow for poorly (or slowly) perfused tissues as ''QppC,'' while Clewell used ''QSC.''

TABLE VI–2.—DEFINITIONS OF PHARMACOKINETIC PARAMETERS

Parameter (units)	Definition
BW (kg)	Body weight in kg. Human body weights were assumed to be 70-kg (Reference Man). Mouse body weights were the average weight of mice in the NTP bioassay.
QPC unscaled (1/hr, 1 kg BW)	Breathing rate. QPC = QP(1/hr)/$BW^{.75}$ where QP = alveolar ventilation rate. Human QP was based on rate of 9.6 m^3/8-hr (converted 1/hr and adjusted to alveolar ventilation (= 0.70 total ventilation) except in NIOSH and OSHA-modified models. Mouse QP = (24.3 1/hr)(0.70 alveolar/total).
QCC unscaled (1/hr, 1 kg BW)	Cardiac output. QCC = QC(1/hr)/$BW^{.75}$ where QC = cardiac output in 1/hr. Reitz set QC = QP. Clewell and NIOSH based human QC on Astrand et al. [Ex. 7–120] data on cardiac output and breathing rate vs. workload.
VPR (ratio, unitless)	Alveolar ventilation/perfusion ratio.
Blood flows to tissues	
QGC or QgiC (fraction of cardiac output)	Blood flow to gastrointestinal tract as a fraction of cardiac output. QGC = QG/QC.
QLC or QliC (fraction of cardiac output)	Blood flow to liver as a fraction of cardiac output. QLC = QL/QC.
QFC or QfatC (fraction of cardiac output)	Blood flow to fat as a fraction of cardiac output. QFC = QF/QC.
QSC or QppC (fraction of cardiac output)	Blood flow to slowly (or poorly) perfused tissues as a fraction of cardiac output. QSC = QS/QC.
QRC or QwpC (fraction of cardiac output)	Blood flow to rapidly (or well) perfused tissues as a fraction of cardiac output. QRC = QR/QC.
QmarC (fraction of cardiac output)	Blood flow to bone marrow as a fraction of cardiac output.
Tissue volumes	
VGC or VgiC (fraction of body weight)	Volume of GI tract as a fraction of body weight. VGC = VG/BW.
VLC or VliC (fraction of body weight)	Volume of liver as a fraction of body weight. VLC = VL/BW.
VFC or VfatC (fraction of body weight)	Volume of fat as a fraction of body weight. VFC = VF/BW.
VSC or VppC (fraction of body weight)	Volume of slowly (or poorly) perfused tissues as a fraction of body weight. VSC = VS/BW.
VRC or VwpP (fraction of body weight)	Volume of rapidly (or well) perfused tissues as a fraction of body weight. VRC = VR/BW.
VluC (fraction of body weight)	Volume of lung as a fraction of body weight.
VmarC (fraction of body weight)	Volume of bone marrow as a fraction of body weight.
Partition coefficients	
PB or Pblo	Blood/air partition coefficient.
PG or Pgi	GI tract/blood partition coefficient (GI tract/air divided by PB).
PL or Pli	Liver/blood partition coefficient (Liver/air divided by PB).
PF or Pfat	Fat/blood partition coefficient (Fat/air divided by PB).
PS or Ppp	Slowly (or poorly) perfused tissue/blood partition coefficient (Slowly perfused tissue/air divided by PB).
PR or Pwp	Rapidly (or well) perfused tissue/blood partition coefficient (Rapidly perfused tissue/air divided by PB).
PLU or Plu	Lung/blood partition coefficient (Lung/air divided by PB).
Pmar	Bone marrow:air partition coefficient.
Metabolic parameters	
VMAXC unscaled (mg/hr, 1 kg animal)	MFO pathway Michaelis-Menten maximum velocity for MC metabolism. VMAXC = VMAX (mg/hr)/$BW^{.75}$.
KM (mg/l)	MFO pathway Michaelis-Menten affinity constant for MC metabolism.

TABLE VI–2.—DEFINITIONS OF PHARMACOKINETIC PARAMETERS—Continued

Parameter (units)	Definition
KFC, unscaled, (/hr, 1 kg animal)	GST pathway 1st order kinetic rate constant for MC metabolism. KFC = KF (/hr)($BW^{.25}$).
A1 (ratio)	Ratio of distribution of MFO pathway MC metabolism between lung and liver. A1 = VMAXC(lung)/VMAXC(liver).
A2 (ratio)	Ratio of distribution of GST pathway MC metabolism between lung and liver. A2 = KFC(lung)/KFC(liver).
B1 (ratio)	Ratio of lung and liver tissue content of microsomal protein.
B2 (ratio)	Ratio of lung and liver tissue content of cytosolic protein.
Sp—Kf	Allometric scaling power for body weight scaling of KFC from mice to humans.

The MC physiologically-based pharmacokinetic (PBPK) models discussed here contain the following types of parameters as defined above: body weight, breathing rate, cardiac output, blood flows to tissue compartments (as a fraction of the cardiac output), volumes of tissue compartments (as a fraction of body weight), partition coefficients, the metabolic parameters (the Michaelis-Menten parameters, Vmax and Km, for the MFO pathway and the 1st-order rate constant, Kf, for the GST pathway) and the ratio of the pathway-specific metabolic capacity between the major metabolic sites (lung and liver). Differences in model structure (such as choice of lumped tissue compartments) and differences in sources of data for individual parameters lead to differences in the parameter values used in different models.

The parameter values (point estimates) used in the PBPK models reviewed by OSHA are presented in Table VI–3. The parameter distributions used by OSHA in its analysis are presented later.

As far as OSHA could determine, the parameters chosen by HSIA were those presented in Reitz's 1989 paper [Ex. 21–53] except that OSHA's preferred values for breathing rates (based on 9.6 m^3/workday) and 8-hour human exposures were used. The model submitted by NIOSH used the parameters and computer code from the Reitz model, except for the human breathing rate, human cardiac output and human metabolic parameters. The parameters used by Clewell were summarized in his post-hearing submission [Ex. 96], which included more recent experimental data for the partition coefficients and mouse metabolic parameters and a different scaling for human cardiac output.

TABLE VI–3.—PARAMETERS USED IN PBPK MODELS REVIEWED BY OSHA

Model	Clewell [Ex. 96]		NIOSH [Ex. 23–18]		HSIA [Ex. 19–45]	
Parameter	Mouse	Human	Mouse	Human	Mouse	Human
BW (kg)	0.0345	70	0.0345	70	0.0345	70
QPC, unscaled alveolar ventilation (1/hr, 1 kg animal)	29.0	35	29.0	43.1	29.0	35.0
QCC, unscaled cardiac output (1/hr, 1 kg animal)	16.5	18	29.0	20.9	29.0	35.0
QGC [a], flow to GI tract (fraction of cardiac output)	0.165	0.195	0.0	0.0	0.0	0.0
QLC [a], flow to liver (fraction of cardiac output)	0.035	0.07	0.24	0.2093	0.24	0.24
QFC [a], flow to fat (fraction of cardiac output)	0.03	0.05	0.05	0.040	0.05	0.05
QSC [a], flow to slowly perfused tissues (fraction of cardiac output)	0.25	0.24	0.19	0.4319	0.19	0.19
QRC [a], flow to rapidly perfused tissues (fraction of cardiac output)	0.52	0.445	0.52	0.3188	0.52	0.52
VGC, GI volume (fraction of BW)	0.031	0.045	0.0	0.0	0.0	0.0
VLC, liver volume (fraction of BW)	0.046	0.023	0.04	0.0314	0.04	0.0314
VFC, fat volume (fraction of BW)	0.100	0.16	0.07	0.231	0.07	0.231
VSC, slowly perfused tissue volume (fraction of BW)	0.513	0.48	0.75	0.621	0.75	0.621
VRC, rapidly perfused tissue volume (fraction of BW)	0.041	0.033	0.05	0.0371	0.05	0.0371
VLUC, lung volume (fraction of BW)	0.008	0.006	0.012	0.011	0.012	0.011
PB, blood/air part. coeff	23.0	12.9	8.29	9.7	8.29	9.7
PG, GI tract/air part. coeff	0.52	0.93	NA	NA	NA	NA
PL, liver/blood part. coeff	1.6	2.9	1.71	1.46	1.71	1.46
PF, fat/blood part. coeff	5.1	9.1	14.5	12.4	14.5	12.4
PS, slowly perf./blood part. coeff	0.44	0.78	0.96	0.82	0.96	0.82
PR, rapidly perf./blood part. coeff	0.52	0.93	1.71	1.46	1.71	1.46
PLU, lung/blood part. coeff	0.46	0.82	1.71	1.46	1.71	1.46
VMAXC mg/hr, 1 kg animal (unscaled)	13.4	5.0	13.2	3.98 1.15 9.81 4.71	13.2	4.9
KM (mg/L)	1.35	0.4	0.396	0.72 0.55 0.26 0.79	0.396	0.580

TABLE VI–3.—PARAMETERS USED IN PBPK MODELS REVIEWED BY OSHA—Continued

Model	Clewell [Ex. 96]		NIOSH [Ex. 23–18]		HSIA [Ex. 19–45]	
Parameter	Mouse	Human	Mouse	Human	Mouse	Human
KFC /hr, 1 kg animal (unscaled)	1.5	1.5	1.73	1.56 0.00 1.62 1.79	1.73	1.24
A1 (Vmaxc(lung)/Vmaxc(liver))	0.41	0.015	0.416	0.00143	0.416	0.00143
A2 (KFC(lung)/KFC(liver))	0.28	0.18	0.137	0.18	0.137	0.18

[a] QGC + QLC + QFC + QSC + QRC *MUST* = 1.00.

f. Assessment of the sensitivity and uncertainty of the PBPK model. In the NPRM, OSHA expressed concern that, if PBPK models were used to adjust risk assessments, the uncertainty in PBPK modeling should be adequately addressed. Specifically, OSHA was concerned that the uncertainty in the mechanism of action and the lack of human lung metabolism data were the greatest obstacles to incorporation of pharmacokinetic data into the MC final risk assessment. Many of the uncertainties in model parameters have been quantified by various hearing participants and are summarized below. The quantification of these uncertainties, however, did not address OSHA's primary concerns regarding the mechanism of action and the distribution of metabolism between lung and liver. OSHA's analyses of the uncertainty and variability of parameters in the PBPK model are presented with its risk assessment later in this document.

The concepts of uncertainty, variability and sensitivity in PBPK modeling were defined in comments submitted by the U.S. Navy [Ex. 19–59]:

> As it relates to the issue of using PBPK modeling in risk assessment, uncertainty can be defined as the possible error in estimating the ''true'' value of a parameter for a representative (''average'') animal. Variability, on the other hand, should only be considered to represent true interindividual differences.
>
> The normalized sensitivity coefficient gives the percentage change in a model output due to a percentage change in the parameter value and represents the relative importance of the parameter to the model output under the conditions of the simulation.

Each of these quantities is of concern for risk assessment and PBPK modeling. For example, we know that there is variability or inter-individual heterogeneity in the body weights of humans (and mice), yet we estimate risks for an average member of the population (70 kg in humans, average bioassay weight in mice). For many parameters, the interindividual variability may not be known and must be estimated.

Uncertainty in estimation of the value of a parameter representing an average member of a population is primarily due to laboratory measurement and related errors. Measurement errors, in many cases, can be quantified or estimated so that the potential impact of this uncertainty on the outcome of the PBPK modeling can be assessed.

The sensitivity of the model to particular parameters is useful for determining which experiments should be conducted to confirm parameters and to determine the amount of confidence that PBPK model outputs merit. For example, when a sensitivity analysis is conducted and it is determined that the model outcomes are not very sensitive to changes in the definitions of the lumped tissue volumes, it suggests that there is little need to conduct experiments to describe those relationships more precisely. Similarly, even though the lumped tissue volume does not represent a ''true'' biological quantity, there is confidence that its precise definition is not critically important in PBPK model outcomes. Therefore, if the only large (quantifiable) uncertainty resides in this measurement, one would have greater confidence that the model predictions were reasonably accurate. Therefore, it is instructive to understand which parameters influence the model outcomes to the greatest degree. Conversely, if the PBPK model outputs are sensitive to a parameter which has not been precisely described (such as the distribution of GST metabolism between lung and liver), the confidence in model outputs is correspondingly reduced.

Various investigators have attempted to determine the sensitivity of the PBPK models to parameter values and to characterize the uncertainty and variability within parameters in the models. The first attempt to describe the sensitivity of the Reitz's original PBPK model was performed by the Consumer Product Safety Commission (CPSC).

The CPSC conducted a sensitivity analysis of the metabolic parameters, Km, Vmax and Kf, in the ''Updated Risk Assessment for Methylene Chloride'' [Ex. 7–126]. They analyzed the sensitivity of the model by selecting alternative point estimates for the metabolic parameters and determining what the resulting ratio of GST metabolite at 4000 ppm vs. 1 ppm would be. This analysis shows how this ratio would vary if the metabolic parameters used in the model were higher or lower than the measured values as selected by CPSC. The results showed that the ratio of the GST metabolite in the liver at 4000 ppm to the GST metabolite at 1 ppm (or the ratio of the GST metabolite in the lung at 4000 ppm to the GST metabolite at 1 ppm) was relatively insensitive to the value of Kf (when CPSC varied Kf from 0.01 to 5.3, while Km and Vmax were held constant at Reitz-Andersen values).

HSIA presented a sensitivity analysis of the PBPK parameters from the Reitz (HSIA) model in the testimony of Dr. Reitz [Ex. 23–21A]. Results were presented for mice at 4000 ppm, mice at 1 ppm, humans at 1000 ppm and humans at 1 ppm. In the first analysis (mice at 4000 ppm), the most sensitive parameters were determined to be PB (blood:air partition coefficient) and Kf (metabolic parameter for the GST pathway). The authors observed that at high MC exposure levels the model output was at least an order of magnitude less sensitive to changes in the other sixteen parameters investigated.

When mice were exposed to lower concentrations of MC (1 ppm) Vmax and Km for the MFO pathway were the most sensitive parameters (sensitivity coefficient was over 120% for each of these parameters). In addition, several other parameters were found to exert a significant influence on model outputs: QP, QL, PB, VLu, and KF.

In humans, at high concentrations (> 1000 ppm) the results were similar to those observed in mice: the model was most sensitive to PB and KF, with

sensitivity coefficients of 87% and 97%, respectively. In addition, the human model was also sensitive to the value chosen for the QP (sensitivity coefficient = 43%).

In humans, at 1 ppm MC, Km and Vmax for the MFO pathway were the most sensitive parameters out of the six parameters which had a significant effect upon model outputs: QP, QL, PB, Vmax, Km, and KF.

This type of sensitivity analysis improves on that conducted by the CPSC, because it looks at more of the parameters. It is still deficient, however, because it examines the effect of each parameter individually, and because it does not examine the effect of uncertainty in two key parameters, A1 and A2 (the ratios of distribution of the MFO and GST pathways between lung and liver), on the outcomes of the modeling.

Mr. Clewell [Ex. 19–59] also conducted a sensitivity analysis to determine the impact of uncertainty in PBPK parameters on the model outcomes. In contrast to the HSIA analysis, he examined the sensitivity of the outcomes to the ratios A1 and A2, and he chose a more realistic occupational exposure level (100 ppm). He found that for mice at 4000 ppm, the most sensitive parameters for estimation of lung tumors were KF, A2, and PB. In the liver, the most sensitive parameters were KF and PB, which agrees with the results of the HSIA analysis. For humans at 100 ppm, the most sensitive parameters for estimating lung tumors were KF and A2. Other parameters with significant effects on model outcomes were PB, QPC, BW, KM, QCC, and QLC. The most sensitive parameters for estimating liver tumors were VMAX, KF, QPC and BW, while PB, KM, QCC and QLC also produced significant effects on model outcomes.

In all of these analyses, the PBPK models were clearly sensitive to the values chosen for the metabolic parameters, especially the GST metabolic parameter (KF). Other parameters with consistently significant impact on the outcomes of the model included breathing rate (QP) and distribution of GST metabolism between lung and liver (A2). These analyses suggest that additional studies to quantify the metabolic parameters (KF, KM and VMAX), breathing rates (QP) and distribution of GST metabolism between lung and liver (A2) would increase confidence in the model outcomes. Characterization of the distribution of metabolism between lung and liver is particularly critical because estimates for human lung metabolism were initially based on one pooled sample of lung tissue, and the variability and uncertainty of the value of this parameter has not been quantified.

Some analysts [Ex. 21–52] have suggested that the uncertainty is increased in risk assessments based on PBPK as compared to applied-dose risk assessments, because some methods of quantifying the uncertainty result in rather broad distributions of uncertainties. OSHA, in contrast, agrees with most commenters that quantifying uncertainty in a PBPK model or risk assessment does not increase the uncertainty. The Agency stresses that the appearance of increasing uncertainty with the identification of sources of uncertainty almost certainly means that the original uncertainty was underestimated. (In fact, since many assessors have not attempted even to quantify the uncertainty in applied-dose risk assessments, the uncertainty has often been infinitely underestimated.) When conducting a risk assessment using PBPK that appears to increase the uncertainty over delivered-dose methodologies, the investigator should go back and recalibrate what the uncertainty in the original analysis likely was, in light of the sources of uncertainty identified using PBPK. This would tend to broaden the confidence limits of the traditional risk assessments, almost certainly beyond the limits generated in a thoughtful PBPK-based assessment. For example, many analyses using delivered dose assume that in the interspecies scaling factor, BW^x, x is known with perfect certainty (e.g., it is known to equal 2/3 or 1.0). An analysis that uses an empirically-derived probability distribution for x, which might reasonably extend from approximately 0.6 to approximately 1.0, would yield a rather broad distribution of uncertainty in the resulting estimate of risk.

The Agency also agrees that the primary uncertainties lie in the choice of the dose surrogate and assumptions regarding cross-species scaling. Clewell [Ex. 23–14] investigated the uncertainty of the PBPK parameters using Monte Carlo analyses of the assumed distributions of uncertainty of each parameter. The resulting estimates of dose surrogate values were characterized by a mean of the distribution and an upper 95th percentile estimate. Mr. Clewell stated [Ex. 19–59]:

> [T]he use of the 95th percentile of the distribution of estimates accounts for additional uncertainty concerning the true values of the PBPK parameters for the bioassay animals and humans.

Mr. Clewell recommended that OSHA use the upper 95th percentile of the Monte Carlo distribution of GST metabolites (from PBPK modeling) as an input to the multistage model to generate risk estimates, and then use of the MLE from the multistage model in those risk estimates, in accordance with previous OSHA risk assessments. He remarked that use of the upper 95th percentile of the PBPK output would be a reasonable mechanism to account for the uncertainty quantified in these analyses. Using the upper 95th percentile of the distribution of GST metabolites, Mr. Clewell's risk estimate for lifetime occupational exposure to 25 ppm MC was 0.9 deaths per 1000 using the MLE of the multistage model, and 1.1 per 1000 using the 95th percentile upper confidence limit (UCL) from the multistage model. Using the mean of the distribtution of GST metabolites, his MLE risk estimate was 0.28 deaths per 1000 at the same exposure level, with an UCL of 0.35/1000.

The HSIA disagreed with using the upper 95th percentile for estimating risks, and stated [Ex. 105]:

> [T]he analyses conducted by Clewell et al. indicate that consideration of model parameter variability does not contribute orders of magnitude to the uncertainty associated with PB–PK risk assessments. Further, the uncertainty associated with PB–PK risk assessments is significantly less than that associated with risk assessments that fail to consider pharmacokinetics. The uncertainty in PB–PK based procedures is simply more readily available for calculation.

OSHA disagrees with the HSIA that the uncertainty and variability associated with PBPK risk assessments is significantly less than that associated with risk assessments that fail to consider pharmacokinetics. Quantification of uncertainty does not equate with reducing uncertainty in an analysis. In fact, at a different level, the assumptions made regarding mechanism of action of MC and extrapolation of lung metabolic rates from one human *in vitro* sample may serve to underestimate the uncertainty inherent in the PBPK-based risk assessment if the underlying assumptions are wrong. Also, as stated above, identification of uncertainty may lead us to recalibrate the uncertainty associated with traditional risk assessment methods. In any event, the possibility that using PBPK significantly reduces uncertainty does not affect the need to account for whatever uncertainty remains.

In addition, OSHA agrees with Clewell that using the upper 95th percentile of the Monte Carlo distribution of GST metabolites as input

to the multistage model is a reasonable way to incorporate the quantifiable uncertainty and variability into a risk assessment. In its final risk estimates, OSHA has used the upper 95th percentile on the distribution of GST metabolites from the Bayesian analysis as the input to the multistage model, as described later in this document.

E. Other Risk Estimates Based on PBPK Models Prior to OSHA's Final Analysis.

A PBPK model can produce estimates of target tissue doses (or dose surrogates) for different hypotheses of action of a chemical. The appropriate choice of target tissue dose can greatly influence risk estimates based on that dose. For MC, the dose surrogate that has been used most frequently to estimate cancer risks is the amount of GST metabolite produced. The amount of GST metabolite can then be used to extrapolate from a high bioassay dose of MC to a low occupational (or environmental) dose of MC and from mouse MC metabolic rates to human metabolic rates.

In the NPRM, OSHA reviewed available risk assessments for MC that used PBPK modeling in a variety of ways. The Food and Drug Administration risk assessment [Ex. 6–1] was not adjusted to account for pharmacokinetic information. The Consumer Product Safety Commission, in its ''Updated risk assessment for methylene chloride'' [Ex. 7–126], used pharmacokinetic data to adjust for differences in metabolism in extrapolating from high dose (4000 ppm mouse bioassay) to low dose (1 ppm) exposures, but did not adjust for interspecies differences in the metabolism of MC. The resulting risk estimate was approximately 2-fold lower than a risk estimate using applied dose.

The U.S. EPA analyzed the MC pharmacokinetic data in its documents, ''Technical analysis of new methods and data regarding dichloromethane hazard assessment'' [Ex. 7–129] and ''Update to the Health Assessment Document and Addendum for dichloromethane (methylene chloride): pharmacokinetics, mechanism of action, and epidemiology'' [Ex. 7–128]. The EPA used the PBPK data to adjust its risk estimates in its Integrated Risk Information System (IRIS) database. Adjustments were made for high-to-low dose and cross-species extrapolation. EPA's risk estimates for low human exposures to MC were decreased by approximately a factor of 9 from its risk estimates made without consideration of PBPK data.

The HSIA [Ex. 105] and ECETOC [Ex. 14] also submitted risk assessments based on PBPK data. The primary difference between the HSIA and the EPA risk estimates was that the HSIA did not use a surface area correction to account for interspecies differences other than pharmacokinetics (e.g., pharmacodynamic differences) while the EPA did. Also, HSIA's risk estimates used OSHA's preferred breathing rates and an occupational exposure scenario. ECETOC based its risk estimates on different measures of human MC metabolism. In a pre-hearing submission, ''Using PB–PK Models for Risk Assessment with Methylene Chloride (Comparison of U.S. and U.K. procedures)'' [Ex. 19–83A], scientists from the U.S. and the U.K. compared methodologies for using PBPK data in the MC risk assessment and presented a consensus opinion that OSHA should use the methodology developed by Dr. Richard Reitz [Ex. 7–225] for the U.S. For this reason, OSHA evaluated Dr. Reitz's analysis, as presented by the HSIA, and did not separately consider the ECETOC risk assessment.

As described previously, Clewell [Ex. 96] and NIOSH [Ex. 94] have submitted analyses of the PBPK data and risk assessments based on those analyses. Both of these analyses used PBPK modeling of the amount of GST metabolites produced in their estimates of carcinogenic risks.

OSHA has evaluated the data in the rulemaking record and has concluded that, if PBPK modeling is used to adjust estimates of risk, the weight of evidence supports using the amount of GST metabolites as the preferred surrogate for target tissue dose. The amount of GST metabolites predicted by the PBPK model varies depending upon the values or distributions chosen for the parameters in the model.

Of the risk assessments described above, OSHA has chosen to compare risks estimated using PBPK models submitted by Reitz et al., Clewell et al. and NIOSH with applied dose methodology using either of two scaling assumptions: the inhaled dose in mg/kg/day (the estimates of risk presented in the NPRM) and ppm-to-ppm extrapolation. OSHA evaluated the methodologies used in developing these risk estimates before developing its final risk estimates, which are presented in the next section.

The risk estimates derived from using PBPK with the multistage dose-response model submitted to the Agency by Reitz et al., Clewell et al., and NIOSH, and the risk estimates derived from applied dose methodologies, are shown in Table VI–4.

TABLE VI–4.—LIFETIME EXCESS RISK ESTIMATES (PER 1000) FROM OCCUPATIONAL EXPOSURE BASED ON FEMALE MOUSE LUNG TUMOR DATA

Model	MLE (UCL)**		
	25 ppm	50 ppm	500 ppm
OSHA NPRM Risk Assessment (mg/kg/d, BW extrapolation) without PBPK Adjustment	2.32 (2.97)	4.64 (5.92)	45.5 (57.7)
PPM to PPM extrapolation without PBPK Adjustment	11.3 (14.4)	22.4 (28.5)	203 (251)
PBPK Reitz female mouse lung—Reitz human (HSIA assumptions)	0.43 (0.53)	0.93 (1.17)	14.3 (17.9)
PBPK Reitz female mouse lung—Dankovic average human (NIOSH assumptions)	0.81 (1.02)	1.69 (2.12)	15.0 (18.7)
PBPK Clewell female mouse lung—Clewell human (Navy assumptions)*	0.91 (1.14)	1.88 (2.36)	27.5 (34.2)
OSHA Final Risk Assessment (female mouse lung with PBPK)	3.62	7.47	125.8

* Upper 95th percentile of the GST metabolites distribution was used as input in the multistage model.
** Maximum likelihood estimates and 95th percentile upper confidence limit (in parentheses) of the multistage dose-response function.

Of those risk estimates considered by OSHA prior to its final risk assessment, the risk estimates for lifetime occupational exposure to the 8-hour TWA PEL of 25 ppm ranged from 0.43 per 1000 to 11.3 per 1000. The risk assessment presented in the NPRM was based on a body weight extrapolation from mice to humans of a mg/kg/day dose of MC. Mr. Harvey Clewell [Ex. 19–59] stated that this dose was not a useful dose for estimating risks from volatile solvents such as MC. He suggested that, if PBPK modeling was not used to estimate target tissue dose (his preferred

method of estimating risk), then a ppm-to-ppm extrapolation would be more appropriate. The ppm-to-ppm extrapolation resulted in an estimated risk of 11.3 deaths per 1000 after lifetime occupational exposure to 25 ppm. However, the ppm-to-ppm extrapolation is generally preferred for site-of-contact tumors. Although it is possible that the MC lung tumors were the result of a site-of-contact mechanism of action, the data are more supportive of a systemic, genotoxic mechanism mediated through metabolites of MC. In addition, the liver tumors are clearly not the result of a site-of-contact carcinogen because the liver is not a site of contact during inhalation bioassays.

Several commenters [Exs. 19–26, 19–28, 19–29, 19–45, 19–48, 19–57, 19–59, 25–E, 25–I] suggested using PBPK modeling to estimate target tissue dose and to account for differences in metabolism at high and low doses and differences in metabolism of MC across species. OSHA compared three sets of parameters in the PBPK models submitted by interested parties to adjust the dose across species and across doses. The risk estimates for those models (using the MLE of the multistage model parameters) ranged from 0.43 to 0.91 deaths per 1000 after lifetime occupational exposure to 25 ppm. Mr. Clewell's risk estimate (0.91/1000 MLE), unlike the other PBPK analyses, represent the upper 95th percentile of the Monte Carlo distribution of GST metabolites as input into the multistage model. The Monte Carlo simulation takes into account the assumed distribution of values for each parameter, including the parameters used to estimate human metabolism of MC. The other PBPK models used point estimates instead of distributions for the PBPK parameters, and therefore it is not known whether these are central estimates or upper bounds. OSHA agrees that the distributional approach used by Clewell is a reasonable way to account for the uncertainty and variability inherent in PBPK modeling, and that uncertainty and variability must be considered in any useful risk assessment. The Agency has used the upper 95th percentile on the distribution of GST metabolites from the Bayesian modeling, coupled with the MLEs of the multistage model parameters, for its final estimates of MC risk.

OSHA has concluded that all the risk estimates presented above support an 8-hour TWA PEL of 25 ppm or lower. The risks estimated from the PBPK models were less than an order of magnitude different from estimates of risk based on applied dose methodology. Either with or without PBPK modeling , the estimates of risk at 25 ppm clearly indicate a significant risk.

The risks estimated from these PBPK models and ppm-to-ppm extrapolation offer a range of risks which might be expected after lifetime occupational exposure to MC. OSHA has assessed these models and has decided to modify and expand on the submitted PBPK and uncertainty analyses in its final estimates of cancer risk, in order to give full consideration to all of the available data. This analysis is presented in the next section.

F. OSHA's PBPK Analysis and Final Risk Estimates

In developing an approach to PBPK modeling for MC, OSHA wished to use all of the available, appropriate and quantifiable biochemical and physiological data in its PBPK modeling and in assessing the uncertainty and variability in model parameters. The Agency determined that this approach would provide the best characterization of the variability and uncertainty in the data and the model. In addition, incorporation of as much of the available data as possible should give the most realistic PBPK model, and in turn, the most realistic risk estimate. Before development of OSHA's PBPK model, Clewell's approach (described above) was the most comprehensive pharmacokinetic approach submitted to the Agency. It addressed many of the issues of concern to the Agency, and OSHA believes that Clewell's approach was a reasonable template for using PBPK in risk assessment. However, since Clewell's work was done, PBPK modeling has continued to advance. Therefore OSHA modified Clewell's model to accommodate these advances and to allow incorporation of additional biochemical and physiological data that had been added to the rulemaking record. The following is a summary of OSHA's final (revised) PBPK analysis. A more detailed discussion can be found in the reports submitted to the Agency, reflecting OSHA's analysis in which the Agency was assisted by contractors [Ex. 128].

1. Review of Clewell's PBPK Analysis

a. Clewell's analytical approach.

Clewell et al. [Ex. 96] employed Monte Carlo techniques to investigate imprecision in estimates of human health risk from occupational exposure to MC, as a function of imprecision in parameter values of the PBPK and dose-response models. (As described below, OSHA and its contractors believe that Clewell et al. did not correctly parse out uncertainty and variability, so their analysis is described as accounting for ''imprecision'' rather than uncertainty or variability). In the Clewell et al. analysis, probability distributions were specified for each PBPK model parameter in an attempt to characterize imprecision. Computer-based techniques were used to obtain pseudo-random samples from these statistical distributions, generating multiple sets of model parameter values. These sets of parameter values were then used to obtain a corresponding distribution of PBPK model predictions of various measures of internal dose for a simulated animal bioassay (e.g., GST metabolism in lungs of mice exposed to 2000 ppm and 4000 ppm for 6 hrs/day, 5 days/wk). The mean of the mouse internal dose distribution was used as the dose input to obtain the MLE and UCL on the multistage model parameters, using the tumor incidence data from the NTP bioassay. The multistage model was run a second time using the upper 95th percentile of the mouse internal dose distribution as the dose input to obtain the MLE and UCL on the multistage model parameters. This yielded a total of four estimates of the parameters (q_o, q_1, and q_2) of the mouse dose-response function: 1) Mean of internal dose distribution/MLE of multistage model parameters; 2) Mean of internal dose distribution/UCL of multistage model parameters; 3) Upper 95th percentile of internal dose distribution/MLE of multistage model parameters; and 4) Upper 95th percentile of internal dose distribution/UCL of multistage model parameters.

Each set of dose-response parameters obtained from the analysis of the mouse data was then used to calculate human risk estimates. The upper 95th percentile of the human internal dose distribution was used to calculate the dose surrogate at 25 ppm, 8 hr/d exposure and then substituted into the MLE and UCL of the multistage parameters to obtain the MLE and UCL estimates of risk. Similarly the mean of the human internal dose distribution was used in conjunction with the MLE and UCL of the multistage model parameters. Therefore, four human risk estimates were generated, based on the distribution of human internal doses and the dose- response function derived from the multistage analysis of the NTP mouse bioassay. The four human risk estimates are: 1) upper 95th percentile of the human internal dose distribution/MLE of the multistage model parameters; 2) mean of human internal dose distribution/MLE of the multistage model parameters; 3) upper 95th percentile of the human internal dose

distribution/UCL of the multistage model parameters; and 4) mean of the human internal dose distribution/UCL of the multistage model parameters.

A major finding of that analysis was that the mean estimate of added cancer risk for occupational exposure at the proposed PEL of 25 ppm based on the PBPK-derived GST-lung dose surrogate (PBPK(mean) / potency(MLE) = 0.39 x 10^{-3}) was 6-fold lower than the corresponding OSHA estimate (MLE = 2.32 x 10^{-3}) based on administered dose scaled to body weight. The 95 percentile upper bound estimate of risk using the same PBPK distributions and the distribution of 95%UCLs on carcinogenic potency (PBPK(95%)/ potency(95%) = 1.56 x 10^{-3}), was nearly 2-fold less than OSHA's 95%UCL on risk (2.97 x 10^{-3}).

b. Clewell's PBPK model. The PBPK model used by Clewell et al. in performing their Monte Carlo analysis was slightly modified from the PBPK model developed by Andersen et al. and submitted to OSHA by HSIA [Ex. 328]. The primary modification was the addition of a separate compartment for the GI-tract. The general structure of this model has received considerable use by PBPK modelers. Nevertheless, there were several deficiencies in this model and in the subsequent statistical analysis that the Agency believed warranted major modification. These are described in the following section.

*c. Prior distributions for model parameters.*Truncated normals were used as the form for all probability distributions except for metabolic constants, which were described by truncated lognormals. All distributions were truncated to prevent sampling of nonsensical values (e.g., negative values). Truncation in some instances was 2 standard deviations (SDs) from mean values, in others more than 4 SDs.

A variety of sources of information were used as a basis for the probability distributions of the PBPK parameters in Clewell's model: literature summaries for most physiologic and anatomic parameters, direct laboratory measurement of partition coefficients based on vial equilibration studies, and statistical regression analyses of experimental data for fitted metabolic constants.

Clewell et al. stated that the focus of their analysis was on characterizing the effect of ''uncertainty'' in parameter values on uncertainty in PBPK model predictions, uncertainty being defined as the possible error in estimating the ''true'' value of a parameter for a representative ''average'' animal. To maintain consistency with a focus on investigating effects of parameter uncertainty, a logical choice would have been to center their probability distributions using estimates of mean values for all model parameters and to use the standard error of the mean (SEM) to characterize dispersion. It it unclear whether this was done for blood flows, tissue volumes, inhalation rates or cardiac output, since Clewell et al. appear to have relied extensively on an unpublished review of scientific literature performed by S. Lindstedt for the ILSI Risk Science Institute Physiological Parameter Working Group.

Based on Clewell's comments accompanying his PBPK model, it appears that standard errors were not used to characterize variability among individual replicates of measured equilibrium partition coefficients; instead, standard deviations were used. Nor does it appear that Clewell et al. consistently made use of standard errors in characterizing imprecision in their fitted metabolic constants. Inspection of the joint confidence region for their fitted estimates of mouse VmaxC and Km (for the MFO pathway), shown in Figure 6 of Ex. 399, suggest coefficients of variation (%CVs) for VmaxC of about 2%. Similarly, for KfC, the %CV in the fitted MLE appears to be about 3%. These %CVs are considerably smaller than the assumed values of 20% and 30%, respectively, used by Clewell et al. in their Monte Carlo analysis. On the other hand, their %CV for Km does coincide with that indicated by the joint confidence regions. One should also note the high degree of correlation among the fitted values for VmaxC and Km.

In assessing variability in the ratio of *in vitro* MFO and GST metabolism in lung versus liver tissue (i.e., the A1 and A2 parameters), Clewell et al. used the *in vitro* MC metabolism data of Reitz et al. (1989). Yet it appears that the %CV for these data is 24% when one uses SDs among replicates for MFO metabolism in lung and liver of mice. This is substantially less than the 50% assumed by Clewell. One obtains a %CV of 9% when using SEMs.

It appears then, that some of the probability distributions used by Clewell et al. reflect variability beyond that readily identifiable as uncertainty in estimates of sample means. It may be that Clewell made a subjective inflation of variances. Though ad hoc, inflating variances would not be unreasonable given the sparse data on certain model parameters. Another possibility is that the distributions reflect variability due to both uncertainty and intersubject heterogeneity—another reason to inflate variances, or alternately, use SDs rather than SEMs to describe the distributions of the parameters. If so, then it might be more appropriate to view the proportion of simulated estimates of risk that fall within a specified interval as the probability that the true risk for a randomly selected individual is in that interval. Yet strictly speaking this would require that the probability distributions reflect both the full range of uncertainty and heterogeneity in the population of interest, with the latter being unlikely based on inspection. If the analysis only considered imprecision due to uncertainty, as suggested in Clewell et al., then the resulting distribution should instead be viewed as describing the uncertainty in risk for a hypothetical ''average'' individual.

2. OSHA's Modifications to PBPK Analysis

a. Basis for modifying approach of Clewell et al. In addition to the likelihood that Clewell et al. used broader distributions than those necessary to model uncertainty in the PBPK analysis (as opposed to modeling some hybrid of uncertainty and variability), the analytical approach they used (1992 and 1993) also has two well-known methodological limitations. Their representation of imprecision in fitted parameters (e.g., VmaxC, Km, KfC) is problematic because they estimated the variability in these parameters by optimizing the model fit to *in vivo* data, while assuming nominal values for all other model parameters. However, the organ volumes, blood flows, and partition coefficients for the mice used in the gas uptake studies and the humans used in the open chamber studies are clearly not known with exact precision, and are not, therefore, accurately represented by nominal values. Consequently, the variances of the fitted parameters will be *underestimated* with this approach, since full acknowledgment of variability in other model parameters will have been ignored. Furthermore, it is quite likely that the joint parameter space for fitted PBPK model parameters will exhibit a considerable degree of correlation. Importantly, failure to account for such covariances when performing Monte Carlo sampling may *overstate* variance in some model predictions by assuming independence where it does not exist. The implications of these methodological limitations on predicted risk are unclear, since they would seem to exert countervailing effects on estimating uncertainty. Thus, OSHA decided that it was important to perform an analysis that addressed these limitations. The

use of a Bayesian statistical framework provided a means of overcoming the above limitations.

b. Bayesian Approach. A Bayesian analysis allows the logical combination of two forms of information: ''prior knowledge'' about parameter values drawn from the scientific literature, and data from experimental studies (e.g., the mouse gas uptake studies, or, for humans, the open chamber experiments performed by Dow Chemical company), all within the context of a PBPK model. Clearly, neither prior information about parameter values nor experimental data alone are capable of precisely determining all parameter values in the PBPK model. If prior information were sufficient, the additional experiments performed by Clewell et al. and Dow Chemical Co. would not have had to be done. But the available experimental data alone are insufficient to pin down all parameters of the model to reasonable values (which is why no attempt was made to simultaneously optimize all PBPK parameters to data). Fitting only two or three parameters while holding others constant so as to reduce dimensionality leads to the biases and underestimation of variance mentioned above.

A second feature of this Bayesian approach is that it yields distributions for all of the PBPK model parameters together with information about their entire joint covariance structure. Thus, the Bayesian analysis outputs distributions of parameter values that are consistent with both all the available data as well as the prior information. It is then possible to use samples from the joint posterior distribution of the parameters to simulate formation of GST metabolites in lung tissue from different species and cancer risk, therefore producing posterior distributions for these endpoints. It should be noted that if no data are available (or if the data are not informative as to the likely value of the parameter), the posterior distribution is equivalent to the prior distribution and this approach is then equivalent to the standard Monte Carlo sampling from the prior distribution, as in Clewell et al. Alternately, Bayesian updating with a uniform prior distribution (i.e., complete ignorance about plausible values) used in conjunction with data leads to a posterior distribution proportional to the distribution of the data. The most important applications of the Bayesian approach arise when informative (e.g., physiological, anatomical) prior distributions exist, in parallel with experimental metabolic data. This is now the case with PBPK modeling of MC. In this case, Bayesian modeling results in all the information content of both prior distributions of parameter values and metabolic data being incorporated in the posterior distribution of parameter values, which will have reduced variance compared to the prior distribution. Distributions of parameter values for both human and mouse PBPK models, and the multistage cancer model, were determined with this technique.

c. PBPK Model Modifications. OSHA's final risk estimates were based on the Bayesian analysis described here. The Clewell model formed the structural core of the analysis, although five additional structural modifications were made as described below. These modifications were necessary to make the PBPK model more physiologically realistic:

(1) Bone marrow was treated as a separate compartment. In the Clewell model (as in many PBPK models), bone marrow tissue was combined with other tissues into a (presumably) kinetically homologous compartment. Based on blood perfusion rates, a reasonable choice would be to place marrow in the well-perfused tissue compartment. However, if the physicochemical affinity of the compartment is considered, it makes more sense to place marrow in the adipose tissue compartment, since red marrow (at least in humans) has a fat content of about 40% and yellow marrow has a fat content of 80%. In comparison, liver, brain, kidney and heart all have fat contents (in humans) well under 20% . In addition, bone marrow accounts for a significant percentage of body weight and receives a substantial fraction of cardiac output. Therefore, a strong argument can be made for treating bone marrow as a separate compartment, as OSHA has done here.

(2) Partitioning MFO and GST metabolism between the lung and liver. Clewell made the MFO and GST metabolic constants for lung dependent on the fitted constants for the liver, so as to reduce the number of fitted parameters to be simultaneously estimated from rodent and human *in vivo* data. For example, A1 is defined as the ratio of lung to liver *in vitro* MFO enzymatic activity, normalized to microsomal protein,

$$A1 = \frac{\text{nmol DCM oxidized/min/mg lung microsomal protein}}{\text{nmol DCM oxidized/min/mg liver microsomal protein}}$$

Similarly, A2 is the ratio of lung to liver *in vitro* GST enzymatic activity, normalized to cytosolic protein,

$$A2 = \frac{\text{nmol DCM conjugated/min/mg lung cytosolic protein}}{\text{nmol DCM conjugated/min/mg liver cytosolic protein}}$$

This assumes that lung and liver have equivalent mg protein per mg tissue contents. Yet the data of Litterst et al. (1973) argue against such an assumption. Litterst et al. measured microsomal protein and soluble protein in lung and liver tissues of mice, rats, hamsters, guinea pigs and rabbits. These data indicated ratios of mg microsomal protein content of lung versus liver tissue of less than 0.3, and a similar ratio for soluble protein of about 0.7. Thus, some adjustment of the constants A1 and A2 are required.

The equations used to compute a lung Vmax for the MFO pathway and a lung Kf for the GST pathway from a liver Vmax and Kf were thus modified to include an additional proportionality factor to account for differences in microsomal and cytosolic protein content of lung and liver tissue. Specifically,

$$Vmax_{lung.MFO} = Vmax_{liver.MFO} \times [V_{lung} / V_{liver}] \times A1 \times B1$$

where B1 is the ratio of [mg microsomal protein per mg of lung tissue] to the same measure for liver tissue. A geometric mean and geometric standard deviation for B1 were derived from the data of Litterst et al. (1973) to use as input in the Bayesian prior distribution for this parameter. Notably, accounting for this difference in protein content leads to a proportionality factor approximately four-fold less than that used by the Clewell et al. (i.e., A1 x B1 = 0.41 × 0.27 = 0.11).

Similarly, for $Kf_{lung.GST}$,

$$Kf_{lung.GST} = Kf_{liver.GST} \times A2 \times B2$$

Here too, the data of Litterst et al. (1973) were used to compute a ratio of mg soluble protein per mg lung to the same measure for liver, yielding a mean value of 0.68 for B2. For a human B2, the average of the ratios computed for mice, rats, hamsters, guinea pigs, and rabbits as per Litterst et al. (1973) was used.

(3) Linkage of alveolar ventilation to cardiac output. In recognition of OSHA's interest in occupational exposures, Clewell used values of cardiac output and alveolar ventilation rates consistent with the performance of light work. However, they did not account for the altered distribution of regional blood flows known to occur in response to increases in work intensity [Exs. 7–115, 7–120, 21–81], as was done in subsequent MC PBPK work by Dankovic and Bailer [Ex. 23–18] (1994). In the latter analysis, alveolar ventilation (QP) was made dependent on cardiac output (QC) by making QP = QC × VPR, where VPR is the ventilation-perfusion ratio. VPR was treated as a random variable with an assigned prior probability distribution.

(4) Linkage of work intensity to changes in physiology. Cardiac output, ventilation perfusion ratio, and percent of cardiac output delivered to tissues were made dependent on work intensity. Using the data of Åstrand (1983) [Ex. 21–81]—and similar to what was done by Dankovic and Bailer (1994) [Ex. 23–18]—slope factors were derived to describe change in flows per change in work intensity as measured in watts. These slope factors were then used to modify resting flows for varying levels of work intensity. This approach was taken so that the influence of variability in work load (i.e, work load was treated as a random variable)—with concomitant adjustments to regional blood flows and ventilation rate—on delivered dose could be modeled.

(5) Maintaining mass balance in sampling of fractional blood flows and compartment volumes. Monte Carlo sampling of fractional quantities such as the proportion of cardiac output delivered to different compartments, or the proportion of body weight represented by a given compartment, requires the imposition of some type of constraint to prevent random sampling leading to summed proportions greater than the whole (and thus causing nonsensical departures from mass balance). The following constraint was imposed: VppC = 0.82—∑ViC 's (0.82 is a nominal value for the fraction of body weight absent bone, blood, and stomach and intestinal contents), QwpC = 1—∑QiC 's (in the mouse model), and QppC = 1—∑QiC 's (in the human model). The use of either QwpC or QppC as the quantity to be made dependent on the other fractional flows has biological appeal—one expects that higher fractional blood flow to the poorly-perfused compartment (i.e., muscle and skin) should be accompanied by a lower fractional flow to the well-perfused compartment, and vice versa. The choice of QwpC versus QppC as the one to be made dependent on others appeared to be unimportant in work with the mouse model. The choice was important in work with the human model. Here it was necessary to choose QppC, because of its large variance relative to QwpC (i.e., since QppC cannot be estimated precisely, it makes sense to let our greater knowledge of the other fractional flows inform us about plausible values of QppC).

The above approach modifies the approach taken by Clewell et al. [Ex. 96]. Their approach was to randomly draw from the distributions for cardiac output and all fractional flows, use the random draws to compute the absolute flows to the individual compartments, and then to sum the individual flows to make a new cardiac output value for use in the simulation. On the other hand, OSHA's final analysis avoided arbitrarily modifying the prior distribution for cardiac output (which happens to be one of the relatively well-known parameters). Furthermore, Clewell did not make the fractional flows dependent on one another.

d. Prior Probability Distributions. A skewed, lognormal-like distribution is generally observed for biological parameters. However, most, if not all, parameters are also positive and have physiological bounds. Thus, truncated lognormal distributions of the parameter values were used in this analysis. They do not differ appreciably from normal distributions for small values of the variance.

In specifying prior distributions an attempt was made to characterize the variability of the mean parameter values for small groups of rodents and humans. This focus was adopted to make the prior distribution congruent with the data sets available for Bayesian analysis. For example, the rodent gas uptake data represent the aggregate pharmacokinetic behavior of groups of 5 mice. Prior distributions were therefore constructed to reflect the degree of variability in mean physiological and anatomical PBPK parameters for small groups of mice. A similar approach was taken in defining prior distributions for human physiologic and anatomic parameters, since the available experimental data reflected the averaged pharmacokinetic behavior of 6 subjects. In practice, this meant amassing studies reporting mean values for certain PBPK parameters (e.g., tissue weights, blood flows, cardiac output, minute ventilation), and then using these means as data for computing a geometric mean (GM) and geometric standard deviation (GSD) with which to estimate the parameter values for the truncated lognormal distributions. Sampling of all lognormal distributions was truncated at 2 GSDs, with one exception. Truncation of the blood:air partition coefficient was extended to 3 GSDs based on results from preliminary runs.

Table VI–5 presents a summary of the prior probability distributions used in the Bayesian fitting of the mouse and human data sets. The prior distributions for metabolic constants to be estimated from *in vivo* data were made very broad (i.e., assigned a GSD of 10) to reflect our ignorance of these values before examining the data. Similarly, the prior distributions for parameters of the multistage cancer model were broad uniform distributions, constrained to be positive, as required by the standard model.

TABLE VI–5.—PRIOR DISTRIBUTIONS USED IN BAYESIAN ANALYSIS OF MOUSE AND HUMAN IN-VIVO DATA

	Parameter	Mouse priors		Human priors	
		GM	GSD	GM	GSD
Flows:					
QCC	Cardiac Output (l/hr/kg—BW)	a 34.8	1.14	4.2	1.10
VPR	Alveolar Ventilation Perfusion Rate	b 1.22	1.95	1.35	1.15
Tissue Blood Flows (fraction of cardiac output):					
QgiC	GI Tract	0.165	1.30	0.191	1.25
QliC	Liver	0.017	1.20	0.067	1.20
QfatC	Fat	0.047	1.60	0.057	1.45
QppC	Poorly Perfused Tissues	0.276	1.25	0.198 c	1.55
QwpC	Well Perfused Tissues	c 0.369	1.10	0.443	1.25
QmarC	Bone Marrow	0.089	1.60	0.044	1.70
Tissue Volumes (fraction of body weight):					
VgiC	GI Tract	0.035	1.30	0.017	1.10
VliC	Liver	0.045	1.20	0.026	1.10
VfatC	Fat	0.077	1.40	0.204	1.20
VppC	Poorly Perfused Tissues	c 0.556	1.10	0.470 c	1.15
VwpC	Well Perfused Tissues	0.065	1.15	0.044	1.10
VluC	Lung	0.008	1.30	0.008	1.15
VmarC	Bone Marrow	0.033	1.50	0.050	1.10
Equilibrium Partition Coefficients:					
Pblo	Blood:Air	13.7	1.80	8.4	1.30
Pgi	GI Tract:Air	10.5	1.20	8.1	1.60
Pli	Liver:Air	22.9	2.00	9.9	1.60
Pfat	Fat:Air	98.2	1.40	97.6	1.25
Ppp	Poorly Perfused Tissues:Air	9.5	1.30	6.8	1.60
Pwp	Well Perfused Tissues:Air	10.2	1.20	7.6	1.40
Plu	Lung:Air	10.0	1.30	7.6	1.50
Pmar	Bone Marrow:Air	62.0	1.60	48.8	1.60
Metabolic Parameters:					
VmaxC	Maximum metabolic velocity of MFO saturable pathway (mg/hr/kg—liver).	750	10.00	75	10.00
KM	Affinity of MFO saturable pathway (mg/l)	1.35	10.00	0.6	10.00
KFC	First order rate constant for GST pathway (l/hr/kg − 0.25).	1.5	10.00	Mouse post. d	Mouse post. d
A1	Ratio of lung to liver in-vitro MFO metabolic velocities (nmol/min/gm—lung—micros.Prot)/ (nmol/min/gm—liver—micros.Prot).	0.405	1.67	0.0045	4.50
A2	Ratio of lung to liver in-vitro GST metabolic velocities (nmol/min/gm—lung—cytos.Prot)/ (nmol/min/gm—liver—cytos.Prot).	0.282	1.67	0.122	3.60
B1	Ratio of lung and liver tissue content of microsomal protein.	0.271	1.25	0.297	1.10
B2	Ratio of lung and liver tissue content of cytosolic protein.	0.721	1.25	0.807	1.20
Sp—Kf	Allometric scaling power for body weight scaling of KFC from mice to humans.			−0.272 e	0.08 e

Notes: (a) value computed for 0.025 kg mouse, 70 kg human; (b) unitless; (c) prior distribution not used, fractional flow made functionally dependent on others (see text); (d) human prior set equal to mouse posterior; (e) mean and standard deviation of a truncated normal distribution.

While it is desirable to separate variability into components reflecting pure uncertainty (e.g., measurement error) versus interindividual heterogeneity and to propagate them separately, it is necessary to build from the start an adequate statistical model. The problem here is complicated by the fact that both the rodent and human *in vivo* data used for estimating metabolic constants reflected either aggregated or averaged pharmacokinetic behavior. Thus the prior distributions and the statistical model used here aggregate variability due to both finite precision in measured values and heterogeneity among average values for small groups of rodents or humans; they do not, it must be emphasized, reflect heterogeneity among the individual humans in a large, representative population.

e. In Vivo Rodent and Human data. Bayesian updating of the distributions was performed using the same data sets used by Clewell et al. to obtain fitted estimates of mouse and human metabolic constants; namely, gas uptake studies with mice with or without pretreatment with a MFO inhibitor and the human open chamber inhalation studies. All mouse gas uptake studies were conducted with 5 female mice in

a single chamber. Thus, measured observations of decline in chamber concentration of MC represent the aggregate pharmacokinetic behavior of groups of 5 animals.

The human *in vivo* data were obtained from Tables 2 and 3 in Andersen et al. (1991) [Ex. 21–94]. Briefly, these data represent exhaled breath and venous blood concentrations of MC for 6 male human volunteers exposed to MC concentrations of 100 or 350 ppm for a period of 6 hours. These data have only been reported as means and standard deviations of the six subjects, which is unfortunate. Thus, the available data reflect the average pharmacokinetic behavior of the 6 subjects. When simulating the human data reported in Andersen et al. (1991), the work load was assumed to be zero watts (rest) and the averaged body weight of the 6 subjects was assumed to be known without error (86 kg).

f. Simulating the Rodent Bioassay and Human Occupational Exposure. Distributions for GST metabolism in the lungs of mice exposed to 2000 ppm or 4000 ppm exposures, for 6 hrs/day and 5 days/week, were obtained by simulating these two exposures (the ones used in the NTP bioassay) with 5000 realizations drawn from the joint posterior distribution of the mouse PBPK parameters.

The quantity of metabolites formed during the 4th week (dynamic equilibrium reached) was divided by 7 to give an average measure per day. For use as an input dose to the multistage model, these posterior distributions were approximated by truncated lognormals.

The same set of 5000 parameter vectors was used to simulate both 2000 and 4000 ppm MC exposures. The control dose was always assumed to be 0. Thus, a 5000-by-3 matrix of doses was generated, where the three column vectors represent different realizations of a particular dose group (0, 2000 and 4000 ppm MC) and the row vectors represent different realizations of bioassay doses.

This method of using the joint posterior distributions for the two doses in the mouse bioassay implies certain assumptions about the uncertainties. Most importantly, this approach (referred to in this document as the ''dependence case'') assumes that the posterior distributions primarily reflect uncertainty about a single average value equally applicable to all groups of approximately 50 mice (i.e., it assumes groups of 50 mice will have the same ''average'' physiological, anatomical, physicochemical and metabolic attributes, and that these average values are simply known to us with uncertainty). An alternative would be to model the ''independence case'' by using a different random draw from the vector of PBPK parameters for one dose group than for the other. This approach assumes that the posterior distributions primarily reflect heterogeneity in the average attributes of groups of 50 rodents. Under the dependence case, estimates of metabolized dose for the two exposures would tend to move in tandem for a given simulation (i.e., when one dose is estimated to be low relative to its average, so is the other; likewise, when one is high, so is the other), and in principle would therefore exhibit less variability in dose-response shape (e.g., linear, sublinear, supralinear).

It appears that the dependence case is more reasonable than the independence case, by appealing to biological theory and by examining the results of the sensitivity analysis conducted as part of this risk assessment. The sensitivity analysis showed that predicted mouse GST metabolism at 2000 ppm was most sensitive to variation in the model parameter A2. Variability in A2 was primarily a consequence of uncertainty in using an *in vitro* ratio of enzymatic activity to make inferences about an *in vivo* ratio. Therefore, uncertainty rather than heterogeneity seems to dominate the distribution of mouse GST metabolism estimates. Besides, laboratory rodents have a carefully controlled genetic makeup, primarily so that they will differ little from each other physiologically; thus, groups of 50 rodents should have extremely similar average characteristics (the variance of the mean of a characteristic within a group of 50 rodents will be approximately 50 times smaller than the (already small) inter-individual variance). OSHA has determined that this reasoning supports use of the dependence case in this analysis. (Note that the excess risk estimates using the dependence case are only about a factor of 1.5 higher than those using the independence case).

Five human occupational exposures were simulated: constant exposure to 10, 25, 50, 100 or 500 ppm MC for 8-hrs per day and 5 days per week. Simulations were made up to 4 weeks of work, at which a dynamic equilibrium was reached, and as with mice, were performed using 5000 parameter human vectors drawn from their joint posterior distribution, augmented by allowing for additional variability in human body weight and work intensity (the latter linked to changes in cardiac, ventilation-perfusion and regional blood flow as described above).

g. Sensitivity Analysis. The influence of variability in mouse and human PBPK model parameters on variability in predicted mouse and human GST lung metabolism was assessed by computing pairwise correlation coefficients using each parameter vector (i.e., the marginal posterior distribution) and the corresponding vector of model predictions. For mice, the sensitivity to predicted GST—lung metabolism in the simulated 2000 ppm bioassay dose group was evaluated. For humans, predicted GST—lung metabolism for an occupational exposure to 25 ppm was considered. Pairwise correlation coefficients were computed using 5000 parameter vectors drawn from the joint posterior distribution and the associated model output vector.

Table VI–6 presents the results from the sensitivity analysis. The strongest pairwise correlation between predicted lung GST metabolism and any input parameter, for either mouse or human simulations, was A2. For the mouse simulation of a 2000 ppm exposure, B2 gave the next strongest pairwise correlation. The mouse parameters QlivC, VlivC, VmaxC, Pfat and QppC all exhibited more moderate (though not negligible) correlations. For the human occupational simulation, the parameters KfC, VmaxC, Sp__Kf, and B2 all exhibited moderate pairwise correlations with human lung GST metabolism. For both mice and human sensitivity analyses, there were a half-dozen or more parameters exhibiting weak (r between 0.1 and 0.2) correlations. It is important to note that all parameters are further correlated via their posterior joint distribution function. This explains why the sum of the regression coefficients (i.e., squares of the correlation coefficients) is greater than 1. Thus considerable care should be exercised in quantitatively estimating the ability of variability in any input parameter to explain variability in predicted GST metabolism, especially among parameters with similar pairwise correlation coefficients.

TABLE VI–6.—CORRELATION COEFFICIENTS FOR TOTAL GST LUNG METABOLISM FROM MONTE CARLO ANALYSIS USING MOUSE AND HUMAN POSTERIOR DISTRIBUTIONS

Mouse 2000 PPM		Human 25 PPM	
Parameter	Correlation coefficient (r)	Parameter	Correlation coefficient (r)
A2	0.860	A2	0.850
B2	0.530	KfC	0.315
QliC	0.335	VmaxC	−0.291
VliC	−0.248	Sp—Kf	0.232
VmaxC	−0.229	B2	0.221
Pfat	−0.203	Pmar	−0.183
QppC	−0.202	QfatC	0.180
VPR	0.193	B1	0.179
Pli	−0.173	VliC	0.161
A1	−0.149	VmarC	0.146
QgiC	−0.145	Work	0.142
Pmar	0.144	QwpC	0.141
VwpC	−0.121	VfatC	0.136
KfC	0.120	QmarC	0.136
Pwp	−0.106	Km	−0.095
VluC	−0.120	QC	−0.083
B1	−0.093	QliC	−0.083
QmarC	−0.083	A1	−0.071
Ppp	−0.076	QgiC	−0.065
VgiC	0.074	Pfat	−0.061
Pgi	0.054	Pwp	−0.058
QC	−0.049	VluC	−0.052
BW	−0.042	Pgi	−0.050
Plu	0.039	VwpC	0.041
Km	−0.035	Pblood	0.039
tVmaxC	0.024	dVPR/dW	0.039
QfatC	0.020	BW	−0.038
Pblood	0.019	dQli/dW	−0.033
VfatC	−0.013	Plu	0.023
Vmar	−0.007	Ppp	0.021
		dQfat/dW	0.016
		VgiC	−0.012
		Pli	−0.010
		dQgi/dW	−0.010
		dQmar/dW	−0.009
		VPR	0.006
		dQC/dW	−0.000
		dQwp/dW	−0.000

h. Posterior PBPK Parameter Distributions. Table VI–7 lists the posterior distributions for mouse PBPK parameters obtained by Bayesian updating of the prior distributions using the available gas uptake data. Comparison of the prior and posterior probability distributions reveals that the gas uptake data retain considerable influence on the distributions of many of the important PBPK model parameters. Medians of the posterior distributions for VPR, Qfat, Pblood, Pmar, Km, A1, and A2 were all appreciably different than the medians for their corresponding prior distributions. Percent CVs for nearly all posterior distributions were considerably smaller than those of their prior distributions. As expected, the marginal variances for the metabolic constants were considerably greater than what was obtained under nonlinear maximum likelihood regression analysis with all other model parameters fixed at nominal values.

TABLE VI–7. PRIOR AND POSTERIOR (FITTED) DISTRIBUTIONS OF THE MOUSE MODEL PARAMETERS

	Parameter	Central tendency		Maximum posterior	Variability	
		Prior median	Posterior median		Prior %CV	Posterior %CV
Flows:						
QCC	Cardiac Output (l/hr/kg__BW)	34.8	34.4	37.6	18	9
VPR	Alveolar Ventilation Perfusion Ratio	1.22	1.59	1.49	75	14
Tissue Blood Flows (fraction of cardiac output):						
QgiC	GI Tract	0.165	0.140	0.175	26	16

TABLE VI–7. PRIOR AND POSTERIOR (FITTED) DISTRIBUTIONS OF THE MOUSE MODEL PARAMETERS—Continued

	Parameter	Central tendency		Maximum posterior	Variability	
		Prior median	Posterior median		Prior %CV	Posterior %CV
QliC	Liver	0.017	0.020	0.017	19	16
QfatC	Fat	0.047	0.090	0.098	43	19
QppC	Poorly Perfused Tissues	0.276	0.290	0.243	22	18
QwpC	Well Perfused Tissues	0.369	a 0.360	0.378		a
QmarC	Bone Marrow	0.089	0.100	0.090	51	27
Tissue Volumes (fraction of body weight):						
VgiC	GI Tract	0.035	0.040	0.038	26	22
VliC	Liver	0.045	0.050	0.050	18	12
VfatC	Fat	0.077	0.070	0.055	35	24
VppC	Poorly Perfused Tissues	0.556	b 0.540	0.569		b
VwpC	Well Perfused Tissues	0.065	0.070	0.065	14	12
VluC	Lung	0.008	0.010	0.007	27	22
VmarC	Bone Marrow	0.033	0.040	0.037	42	29
Equilibrium Partition Coefficients:						
Pblo	Blood:Air	13.7	18.5	13.1	66	18
Pgi	GI Tract:Air	10.5	11.3	9.5	19	17
Pli	Liver:Air	22.9	28.2	23.9	79	32
Pfat	Fat:Air	98.2	100.5	106.7	35	21
Ppp	Poorly Perfused Tissues:Air	9.5	12.1	13.1	27	17
Pwp	Well Perfused Tissues:Air	10.2	10.4	10.3	19	16
Plu	Lung:Air	10.0	11.3	12.5	27	22
Pmar	Bone Marrow:Ait	62.0	70.4	89.2	50	25
Metabolic Parameters:						
VmaxC	Maximum metabolic velocity of MFO saturable pathway (mg/hr/kg__liver).	750	718	661	1413	12
tVmaxC	Maximum metabolic velocity of MFO saturable pathway in t-DCE pretreated mice.	8.4	7.2	11.3	58	50
Km	Affinity of MFO saturable pathway (mg/l)	1.35	0.04	0.03	1413	97
KfC	First order rate constant for GST pathway (l/hr/kg^0.25).	1.5	1.77	2.47	1413	24
A1	Ratio of lung to liver in-vitro MFO metabolic velocities (nmol/min/gm__lung__micros.Prot)/(nmol/min/gm__liver__micros.Prot).	0.405	0.28	0.30	54	31
A2	Ratio of lung to liver in-vitro GST metabolic velocities (nmol/min/gm__lung__cytos.Prot)/(nmol/min/gm__liver__cytos.Prot).	0.282	0.37	0.30	55	41
B1	Ratio of lung and liver tissue content of microsomal protein.	0.271	0.26	0.29	23	18
B2	Ratio of lung and liver tissue content of cytosolic protein.	0.721	0.70	0.84	22	17

Notes: (a) functionally defined as 1__sum (other fractional flows); (b) functionally defined as 0.82__sum (other fractional volumes).

Table VI–8 presents the corresponding set of results for human PBPK parameters. The human *in vivo* data also appeared to contain considerable information about many of the model parameters, as evidenced by shifts in medians and tightening of posterior distributions relative to priors. Fitted estimates of the metabolic constants were fairly precise, even for Km (Table VI–8); indeed, the fits were markedly superior to those shown in Andersen et al. [Ex. 21–94] and Clewell et al. [Ex. 96].

TABLE VI–8.—Prior and Posterior (Fitted) Distributions of the Human Model Parameters

	Parameter	Prior distribution			Posterior distribution			
		GM	GSD	%CV	Posteriors for Bayesian fit		Modified by exercise	
					Median	%CV	Median	%CV
Flows:								
QCC	Cardiac Ouput (1/hr/kg__BW).	4.2	1.10	10	4.0	6	6.2	17

TABLE VI–8.—Prior and Posterior (Fitted) Distributions of the Human Model Parameters—Continued

	Parameter	Prior distribution			Posterior distribution			
		GM	GSD	%CV	Posteriors for Bayesian fit		Modified by exercise	
					Median	%CV	Median	%CV
VPR	Alveolar Ventilation Perfusion Ratio.	1.35	1.15	15	1.03	1	1.37	9
Tissue Blood Flows (fraction of cardiac output):	.....	.....	.....	.....	.....	.....	.....	.....
QgiC	GI Tract	0.191	1.25	23	0.149	12	0.122	14
QliC	Liver	0.067	1.20	19	0.063	15	0.041	24
QfatC	Fat	.057	1.45	38	0.045	10	0.052	11
QppC	Poorly Perfused Tissues.	0.198	1.55	a	0.378	a 9	a 0.453	10
Qwpc	Well Perfused Tissues.	0.443	1.25	23	0.294	3	0.258	7
QmarC	Bone Marrow	0.044	1.70	57	0.071	38	0.072	38
Tissue Volumes (fraction of body weight):	.....	.....	.....	.....	.....	.....	.....	.....
VgiC	GI Tract	0.017	1.10	10	0.018	8	0.018	8
VliC	Liver	0.026	1.10	10	0.026	8	0.026	8
VfatC	Fat	0.204	1.20	18	0.183	11	0.183	11
VppC	Poorly Perfused Tissues.	0.470	1.15	b	0.489	b 5	b 0.489	5
VwpC	Well Perfused Tissues.	0.044	1.10	9	0.47	7	0.047	7
VluC	Lung	0.008	1.15	14	0.008	11	0.008	11
VmarC	Bone Marrow	0.050	1.10	10	0.049	8	0.049	8
Equilibrium Partition Coefficients:	.....	.....	.....	.....	.....	.....	.....	.....
PC.blood	Blood:Air	8.4	1.30	26	16.5	2	16.5	2
PC.gi	GI Tract:Air	8.1	1.60	50	10.7	36	10.7	36
PC.li	Liver:Air	9.9	1.60	50	13.7	33	13.7	33
PC.fat	Fat:Air	97.6	1.25	22	84.4	12	84.4	12
PC.pp	Poorly Perfuse Tissue:Air.	6.8	1.60	48	13.3	13	13.3	13
PC.wp	Well Perfused Tissue:Air.	7.6	1.40	35	13.1	14	13.1	14
PC.lu	Lung:Air	7.6	1.50	43	9.4	33	9.4	33
PC.mar	Bone Marrow:Air	48.8	1.60	49	47.8	27	47.8	27
Metabolic Parameters:	.....	.....	.....	.....	.....	.....	.....	.....
VmaxC	Maximum MFO metabolic rate (mg/mg/hr/kg_liver).	75.0	10.00	1413	97.2	11	97.2	11
Km	MFO Michaelis Menton constant (mg/1).	0.60	10.00	1413	0.52	39	0.52	39
Kf	1st order rate constant for GST pathway (1/hr).	0.12	2.07	81	0.23	63	0.23	63
A1	[V/S]_lung/[V/S_MFO_liver.	0.0045	4.50	226	0.024	77	0.024	77
A2	[V/S]_lung/[V/S]_GST_liver.	0.236	2.04	83	0.364	49	0.364	49
B1	[mg micr.Prot/gm lung]/[mg micr.Prot/gm liver].	0.297	1.10	10	0.300	8	0.300	8
B2	[mg cyt. Prot/gm lung]/[mg cyt.Prot/gm liver].	0.807	1.20	18	0.845	15	0.845	15

Notes (a) operationally defined as 1—sum (other fractional flows); (b) functionally defined as 0.82—sum (other fractional volumes).

Tables VI–9 and VI–10 compare the posterior distributions for mice and human PBPK parameters with the distributions used by Clewell. For mice, there were appreciable differences in the median values for QCC, VPR, QfatC, QwpC, VwpC, VmaxC, Km, KfC, and the apparent A1 (i.e., A1 × B1). With the exception of VliC, Pblood, Pliv, Ppp and Km, the posterior distributions for all other parameters were tighter than the distributions used by Clewell. The human posterior distributions in Table VI–10 are somewhat different than those in Table VI–8, in that they reflect the influence of modeling variable work intensity on QC, VPR, and all regional blood flows. In comparing these modified posterior distributions to the distributions used by Clewell, one finds appreciable differences in median values for VPR, many of the fractional blood flows (QgiC, QliC, QppC, QwpC), VgiC, PCblood, PCliv, PCfat, VmaxC, KfC, and the apparent A2 (i.e., A2 × B2). All human posterior distributions except for VliC, Pli, and Sp__Kf, had appreciably tighter distributions than those used by Clewell et al. [Ex. 96].

TABLE VI–9.—COMPARISON OF MOUSE PROBABILITY DISTRIBUTIONS USED BY CLEWELL ET AL. WITH OSHA'S POSTERIOR PROBABILITY DISTRIBUTIONS

	Parameter	Central tendency		Variability	
		Clewell et al. median	OSHA median	Clewell et al. %CV	OSHA %CV
Flows:					
QCC	Cardiac Output (1/hr/kg__BW)	[a] 41.5	34.4	9	9
VPR	Alveolar Ventilation Perfusion Ratio	[b] 1.76	1.59	58	14
Tissue Blood Flows (fraction of cardiac output):					
QgiC	GI Tract	0.165	0.14	25	16
QliC	Liver	0.035	0.02	96	16
QfatC	Fat	0.030	0.09	60	19
QppC	Poorly Perfused Tissues	0.250	0.29	40	18
QwpC	Well Perfused Tissues	0.520	c 0.36	50	c
QmarC	Bone Marrow	NA	0.10	NA	27
Tissue Volumes (fraction of body weight):					
VgiC	GI Tract	0.031	0.04	30	22
VliC	Liver	0.046	0.05	6	12
VfatC	Fat	0.100	0.07	30	24
VppC	Poorly Perfused Tissues	0.513	d 0.54	30	d
VwpC	Well Perfused Tissues	0.041	0.07	30	12
VluC	Lung	0.008	0.01	30	22
VmarC	Bone Marrow	NA	0.04	NA	29
Equilibrium Partition Coefficients:					
Pblo	Blood:Air	23.0	18.5	15	18
Pgi	GI Tract:Air	11.4	11.3	30	17
Pli	Liver:Air	38.7	28.2	20	32
Pfat	Fat:Air	107.0	100.5	30	21
Ppp	Poorly Perfused Tissues:Air	8.5	12.1	10	17
Pwp	Well Perfused Tissues:Air	11.4	10.4	20	16
Plu	Lung:Air	10.0	11.3	30	22
Pmar	Bone Marrow:Air	NA	70.4	NA	25
Metabolic Parameters:					
VmaxC	Maximum metabolic velocity of MFO saturable pathway (mg/hr/kg__liver).	970	718	20	12
Km	Affinity of MFO saturable pathway (mg/l)	1.35	0.04	30	97
KfC	First order rate constant for GST pathway (l/hr/kg__0.25)	1.5	1.77	30	24
A1	Ratio of lung to liver in-vitor MFO metabolic velocities (nmol/min/gm__lung__micros.Prot)/(nmol/min/gm__liver__micros.Prot).	0.405	0.28	50	31
A2	Ratio of lung to liver in-vitro GST metabolic velocities (nmol/min/gm__lung__cytos.Prot)/(nmol/min/gm__liver__cytos.Prot).	0.282	0.37	50	41
B1	Ratio of lung and liver tissue content of microsomal protein	1	0.25	0	18
B2	Ratio of lung and liver tissue content of cytosolic protein	1	0.69	0	17

Notes: (a) value computed for 0.025 kg mouse; (b) unitless; (c) functionally defined as 1—sum (other fractional flows); (d) functionally defined as 0.82—sum(other fractional volumes); (na) not applicable.

TABLE VI–10. COMPARISON OF HUMAN PROBABILITY DISTRIBUTIONS USED BY CLEWELL ET AL. WITH OSHA'S POSTERIOR PROBABILITY DISTRIBUTIONS

	Parameter	Central tendency		Variability	
		Clewell et al. median	OSHA median	Clewell et al. %CV	OSHA %CV
Flows:					

TABLE VI–10. COMPARISON OF HUMAN PROBABILITY DISTRIBUTIONS USED BY CLEWELL ET AL. WITH OSHA'S POSTERIOR PROBABILITY DISTRIBUTIONS—Continued

	Parameter	Central tendency		Variability	
		Clewell et al. median	OSHA median	Clewell et al. %CV	OSHA %CV
QCC	Cardiac Output (l/hr/kg__BW)	[a] 6.2	[c] 6.3	9	[c] 17
VPR	Alveolar Ventilation Perfusion Ratio	[b] 1.95	[c] 1.36	18	[c] 9
Tissue Blood Flows (fraction of cardiac output):					
QgiC	GI Tract	0.195	[c] 0.12	10	[c] 13
QliC	Liver	0.070	[c] 0.04	35	[c] 23
QfatC	Fat	0.050	[c] 0.05	30	[c] 15
QppC	Poorly Perfused Tissues	0.240	[c] 0.46	15	[c] 10
QwpC	Well Perfused Tissues	0.445	[c, d] 0.26	20	[c, d] 7
QmarC	Bone Marrow	NA	[c] 0.07	NA	[c] 45
Tissue Volumes (fraction of body weight):					
VgiC	GI Tract	0.045	0.017	10	8
VliC	Liver	0.023	0.026	5	8
VfatC	Fat	0.160	0.187	30	12
VppC	Poorly Perfused Tissues	0.480	[e] 0.483	30	[e] 5
VwpC	Well Perfused Tissues	0.033	0.047	10	7
VluC	Lung	0.006	0.008	10	12
VmarC	Bone Marrow	NA	0.050	NA	8
Equilibrium Partition Coefficients:					
Pblo	Blood:Air	12.9	16.5	15	2
Pgi	GI Tract:Air	12.0	13.5	30	31
Pli	Liver:Air	37.4	13.6	20	34
Pfat	Fat:Air	117.0	81.2	30	13
Ppp	Poorly Perfused Tissues:Air	10.0	13.3	10	14
Pwp	Well Perfused Tissues:Air	12.0	13.0	20	14
Plu	Lung:Air	10.6	9.1	30	32
Pmar	Bone Marrow:Air	NA	51.2	NA	35
Metabolic Parameters:					
VmaxC	Maximum metabolic velocity of MFO saturable pathway (mg/hr/kg__liver).	75.2	94.2	30	12
Km	Affinity of MFO saturable pathway (mg/l)	0.4	0.49	50	35
KfC	First order rate constant for GST pathway (l/hr/kg − 0.25)	1.5	1.82	50	24
A1	Ratio of lung to liver in-vitro MFO metabolic velocities (nmol/min/gm__lung__micros. Prot)/(nmol/min/gm__liver__micros.Prot).	0.015	0.03	70	69
A2	Ratio of lung to liver in-vitro GST metabolic velocities (nmol/min/gm__lung__cytos.Prot)/ (nmol/min/gm__liver__cytos.Prot).	0.18	0.45	70	71
B1	Ratio of lung and liver tissue content of microsomal protein	1.0	0.31	0	8
B2	Ratio of lung and liver tissue content of cytosolic protein	1.0	0.84	0	14
Sp__Kf	Allometric scaling power for body weight scaling of KFC from mice to humans.	− 0.25	− 0.267	0	22

Notes: (a) value computed for 70 kg human; (b) unitless; (c) posterior distributions adjusted for effects of light activity; (d) functionally defined as 1—sum(other fractional flows); (d) functionally defined as 0.82—sum(other fractional volumes); (NA) not applicable.

i. Alternative analysis using the ''parallelogram'' approach. Andersen et al. [Ex. 21–94] estimated a human first order rate constant (Kf) for glutathione (GST) metabolism of MC in the liver by allometric scaling of a fitted estimate of an *in vivo* mouse rate constant (KfC_{mouse}). Specifically,

$$Kf_{human} = KfC_{mouse} \text{ X } BW^{spKf}$$

where spKf was the allometric scaling power with value − 0.25. In their Monte Carlo analysis, Clewell et al. followed the approach of Andersen et al., treating KfC_{mouse} as a lognormally distributed random variable and spKf as a known constant. The Bayesian analysis summarized above also made use of the allometric scaling given by the equation above, but prior probability distributions were specified for both KfC_{mouse} and spKf.

Reitz et al. (1988, 1989) [Exs. 7–225 and 21–53] proposed an alternative approach for estimating an apparent *in vivo* human Kf. The approach, referred to as the ''parallelogram method,'' assumes there is a constant proportionality across species between *in vitro* and apparent *in vivo* metabolic rates when normalized for substrate concentration ([S]). For example, the equation modeling the apparent *in vivo* rate of GSH conjugation (dM_{GST}/dt) is given by:

$$\frac{dM_{GST}}{dt} = Kf \times [S] \times Vol_{liver}$$

The constant proportionality between apparent *in vivo* rates of metabolism and *in vitro* rates implies

$$\frac{dM_{GST}/dt}{[S]} = k_p \times [V/S]_{GST} = Kf \times Vol_{liver}$$

where $[V/S]_{GST}$ denotes an *in vitro* enzymatic rate normalized to [S] and k_p the *in vivo—in vitro* proportionality constant. This approach assumes a common value of k_p across species, such that knowledge of a $[V/S]_{GST\text{-}rodent}$ and Kf_{rodent} (sufficient to estimate a value for k_p as the ratio of Kf_{rodent} to $[V/S]_{GST\text{-}rodent}$) and knowledge of $[V/S]_{GST\text{-}human}$ is sufficient to estimate the remaining corner of a parallelogram, namely Kf_{human}. Therefore, this approach assumes,

$$\frac{[V/S]_{GST_{human}}}{[V/S]_{GST_{rodent}}} = \frac{Kf_{human}}{Kf_{rodent}}$$

or:

$$Kf_{human} = [V/S]_{GST_{human}} \times \frac{Kf_{rodent}}{[V/S]_{GST_{rodent}}}$$

Reitz et al. [Ex. 21–53] obtained an estimate for Kf_{human} using the parallelogram method that was very similar to the estimate obtained by Andersen et al. [Ex. 21–94] using allometric scaling. However, Reitz and coworkers estimated a mean $[V/S]_{GST\text{-}human}$ based on liver samples from only four human subjects—three of which had appreciable enzymatic activity and one with no detectable activity. More recent publications (Bogaards et al., 1993 [Ex. 127–16]; Graves et al., 1995 [Ex. 122]) and unpublished data (Green et al., 1987 [Ex. 14]) provide measured values of $[V/S]_{GST}$ on another 35 human subjects. These additional data demonstrate considerable variation in rates of GST metabolism among human subjects, consistent with a known human polymorphism for GST, described earlier in this Quantitative Risk Assessment. Moreover, these data indicated that, putting aside questions of interlaboratory comparability of measurements, three of the four human samples used by Reitz et al. had GST metabolic rates among the highest reported to date. Consequently, the mean $[V/S]_{GST\text{-}human}$ used by Reitz and coworkers was *greater* than the mean estimable from the full complement of data on human GST activity.

Since OSHA was interested in assessing the effect of accounting for the full complement of data on human GST activity on estimates of cancer risk, this additional analysis was performed, despite the Agency's reservations concerning the appropriateness of using the parallelogram approach in the MC risk assessment. Although this approach allows the use of all of the available data, the uncertainties in the ratio of *in vitro* to *in vivo* metabolic constants raise serious questions for the utility of this analysis. OSHA is presenting this analysis for purposes of comparison and notes that HSIA and Clewell used allometric adjustments in their final PBPK models.

The use of a Kf_{human} derived by the parallelogram method required: (1) modification of the human PBPK model; (2) specification of a prior probability distribution for Kf_{human}; (3) replication of the Bayesian analysis of the human *in vivo* open chamber data using the new prior for Kf_{human}; (4) simulation of the occupational exposure scenario using the joint posterior distributions from the new Bayesian analysis to obtain a posterior distribution for human GST lung metabolism; and (5) re-estimation of the extra cancer risk.

(*1*) *PBPK Model Modifications.* The only structural modification to the PBPK models was to replace the parameter for allometric scaling of Kf_{mouse} with a direct insert of a model parameter Kf_{human}, having its own prior probability distribution.

(*2*) *Prior Probability Distributions.* Mouse prior probability distributions were unchanged. Prior probability distributions for human model parameters were also unchanged, with the exception of prior distributions for KfC, spKf and A2. Prior probability distributions for KfC and spKf were replaced with a prior probability distribution for Kf_{human}. The prior probability distribution for A2 was modified to account for additional data on human lung GST activity submitted to OSHA by HSIA [Ex. 122].

The prior probability distribution for Kf_{human} was derived using the equation:

$$Kf_{human} = Kf_{rodent} \times \frac{[V/S]_{GST_{human}}}{[V/S]_{GST_{rodent}}} \times err_{k_p}$$

where err_{kp} is an error term added to account for uncertainty in estimating the proportionality constant k_p, as k_{mouse}. Thus, to derive a prior probability distribution for Kf_{human}, it was necessary to derive prior distributions for Kf_{rodent}, $[V/S]_{GST\text{-}rodent}$, $[V/S]_{GST\text{-}human}$ and err_{kp}, which in turn were propagated using Monte Carlo techniques in accordance with the relationships specified by the equation above.

(*i*) *Prior distribution for rodent Kf.* The posterior probability distribution used in the main analysis for the apparent *in vivo* rodent KfC parameter was used as the basis for a prior probability distribution for Kf_{rodent}. The posterior distribution was well described by a truncated lognormal distribution with a mean and standard deviation of 1.8 and 0.43 l/hr/bw /$^{-0.25}$, and lower and upper truncations at 0.84 and 3.07 l/hr/bw /$^{-0.25}$, respectively. The posterior distribution was converted to units of (hour)$^{-1}$ by using Monte Carlo techniques to multiply the truncated lognormal by the scalar, (rodent body weight)$^{-0.25}$.

(*ii*) *Prior for rodent liver GST [V/S].* A prior probability distribution for a low dose mouse $[V/S]_{GST}$ was obtained as the ratio of the fitted estimates of *in vitro* V_{max} and K_m reported by Reitz et al. for liver glutathione conjugation of MC. The fitted estimates of V_{max} and K_m and their associated standard errors were used to set the parameters for normal distributions. Monte Carlo techniques were used to obtain the ratio of these two distributions (i.e., V_{max}/K_m), under the assumption that the joint sample space for V_{max} and K_m was correlated with a $\pi = 0.9$. Correlation was induced because a reanalysis of the mouse *in vitro* reported in Reitz et al. showed that the joint parameter space for these two fitted parameters was highly correlated.

(*iii*) *Prior distribution for human GST [V/S].* There were four data sets reporting measured values of *in vitro* GST activity in liver samples from 39 human subjects. These data reflect work from different laboratories using (in some cases) different assay methods and different substrate concentrations. In order to make use of all the data to estimate central tendencies and population variability, it was necessary that all measurements be placed on a common scale.

With respect to assay methods, two of the studies [Exs. 21–53 and 122] reported measured values of $[V/S]_{GST}$ based on detection of [36]Cl from labelled MC. The other two studies [Exs. 14 and 127–16] reported values of $[V/S]_{GST}$ based on detection of formaldehyde, a known decomposition product from GSH conjugation with MC. In a comparison of these two methods, Green et al. [Ex. 14] reported results indicating a systematic difference in measured values of $[V/S]_{GST}$, with the [36]Cl detection method appearing to give estimates approximately 1.7-fold higher than the formaldehyde detection method. In this analysis, the [36]Cl method was chosen as the common scale, since the mouse $[V/S]_{GST}$ data used above were based on this method. Thus, the formaldehyde assay results were multiplied by 1.7 to put them on the [36]Cl scale.

Adjustments for both substrate concentration and nonlinear metabolism were made by converting all the

reported *in vitro* velocity data, $[V]_{GST}$, to V_{max}/K_m ratios (i.e., low dose metabolic velocity), by the equation:

$$\frac{V_{max}}{K_m} = \frac{([V]_{GST} \times (K_m + [S]))/[S]}{K_m}$$

The above equation follows from assuming *in vitro* kinetics can be reasonably modeled as a single-substrate Michaelis-Menton process (i.e., $[V]_{GST} = \{V_{max} \text{ x } [S]\}/\{K_m + [S]\}$). In making adjustments, assay specific substrate concentrations were used (i.e., [S], which ranged from 35 to 94 mM) along with the average estimate of an *in vitro* Km reported by Reitz et al. [Ex. 21–53] in analysis of data from two human subjects (44 mM). It is noteworthy that none of the human *in vitro* $[V/S]_{gst}$ data reported in Reitz et al. were truly reflective of linear kinetics, whereas the mice data were.

After the two above adjustments were made, a lognormal distribution was fit to the transformed data yielding a GM of 0.031 l/min/mg protein, and a GSD of 2.72. This distribution models intersubject variability in in vitro metabolic activity. However, the prior probability distribution for $[V/S]_{gst\text{-}human}$ should reflect variation in means of six subjects, because the *in vivo* human data from Dow Chemical Company reflect the averaged pharmacokinetic behavior of tissue from six subjects. Thus, dispersion in the above distribution was adjusted to give the corresponding sampling distribution for means of n = 6.

(iv) Prior distribution for error term.

The *in vivo* and *in vitro* metabolic data on the MFO metabolic pathway, reported by Reitz et al. [Ex. 21–53], were used to estimate the uncertainty in assuming a constant k_p across species. These were the only data for which both in vivo and *in vitro* information was available on several species and which was directly relevant to MC. To avoid artifacts due to the very imprecise fitted estimates of apparent *in vivo* Km's, *in vivo* / *in vitro* comparisons were constructed based on estimates of Vmax alone. These estimates were then normalized by the ratio obtained for mice, providing a measure of the error in using a mouse ratio to estimate ratios in three other species: rats (1.42), hamsters (0.64), and humans (0.41). The GM (0.72) and GSD (1.89) of these three values were used to set parameters for a lognormal distribution used as the prior probability distribution for err_{kp}. Note that the human value of 0.41 reflected an average of separate estimates on four human subjects, with ratios ranging from 0.1 to 1.0.

(v) Monte Carlo simulation to obtain a prior for human Kf. The above prior probability distributions for Kf_{mouse}, $[V/S]_{gst\text{-}mouse}$, $[V/S]_{GST}$ and err_{kp} were independently sampled by Monte Carlo techniques (n = 5000) and combined to give a prior distribution for Kf_{human} for use in Bayesian analysis of the human open chamber data.

(vi) Revised prior distribution for A2.

A2 is the ratio of *in vitro* GST enzymatic activity in lung tissue to the same activity in liver tissue. In the main analysis, the prior probability distribution for A2 was derived according to the equation:

$$A2 = \frac{[V/S]_{GST_{lung}}}{[V/S]_{GST_{liver}}} \times err_{vivo/vitro}$$

where $err_{vivo/vitro}$ is an error term to account for uncertainty in using a ratio of *in vitro* activity to make inferences about in vivo activity, and the data of Reitz et al. [Ex. 21–53] were used to estimate prior distributions for $[V/S]_{GST\text{-}lung}$ and $[V/S]_{GST\text{-}liver}$. This prior distribution was revised to account for additional human $[V/S]_{GST\text{-}lung}$ and $[V/S]_{GST\text{-}liver}$ data.

(vii) Prior for human lung GST [V/S]. Previously, only a single measured value for $[V]_{GST\text{-}lung}$ from a pooled lung sample from two human subjects was available for estimating A2. Mainwaring et al. [Ex. 124] recently submitted additional $[V]_{GST\text{-}lung}$ data to OSHA, consisting of measured values on three additional human subjects (0.00, 0.06 and 0.21 nmol/min/mg protein). The value reported as 0.00 was assumed equal to one-half the detection limit for the assay. Since these new $[V]_{GST\text{-}lung}$ data were obtained using the formaldehyde detection assay, it was necessary to transform the values to the [36]Cl scale. Lacking direct information, it was assumed that the same HCOOH ‰ [36]Cl correction factor derived for the liver data held for the lung data. A correction for substrate concentration was also made, under the assumption of equivalency in lung and liver *in vitro* Km's. The resulting transformed $[V]_{GST\text{-}lung}$ data were used to construct a prior probability distribution describing uncertainty in the mean of five [1] observations (GM = 0.00082, GSD = 1.61). Note that, in this case, an attempt was made to model pure uncertainty in a low dose $[V/S]_{GST\text{-}lung}$, without information indicating appreciable heterogeneity in the ratio of lung and liver enzymatic activity within an individual.

(viii) Prior probability distribution for uncertainty in human liver GST [V/S]. Because of the focus on uncertainty in A2, the prior probability distribution for $[V/S]_{GST\text{-}liver}$ derived above was modified to describe uncertainty about the mean, given a sample size of 39 subjects.

(ix) Uncertainty in using an in vitro ratio of lung and liver GST activity to make an inference about the corresponding ratio for apparent in vivo GST activity. A prior probability distribution for $err_{vivo/vitro}$ was derived using data on *in vivo* and *in vitro* ratios of liver MFO enzymatic activity for different species, as a surrogate for intra-species lung versus liver GST enzymatic activity. Thus, two key assumptions are made: (i) That relative enzymatic activity for liver tissue from two species is a reasonable surrogate for relative activities of lung versus liver tissue within a single species, and (ii) that the degree of consistency in ratios of *in vivo* versus *in vitro* enzymatic activity will be the same for either MFO or GST mediated processes.

If the apparent *in vivo* Vmax for the MFO pathway in the lung was modeled as:

$$V_{max_{MFO_{lung}}} = V_{max_{MFO_{liver}}} \times \frac{[V/S]_{MFO_{lung}}}{[V/S]_{MFO_{liver}}} \times \frac{Vol_{lung}}{Vol_{liver}}$$

it follows that,

$$\frac{V_{max}A_{MFO_{lung}}}{V_{max}A_{MFO_{liver}}} = \frac{[V/S]_{MFO_{lung}}}{[V/S]_{MFO_{liver}}}$$

where VmaxA denotes normalization of Vmax to unit tissue volume. Although there were insufficient data to

[1] Since the single observation of $[V]_{GST\text{-}lung}$ reported by Reitz et al. (1988) was from a pooled sample of lung tissue from two human subjects, the data point was treated as two observations with the same value.

allow for a direct evaluation of the above equation, the data tabulated by Reitz et al. [Ex. 7–225] for MFO enzymatic activity in mice, rats and hamsters did allow an evaluation of the equality,

$$\frac{V_{max}A_{MFO_{liver_{sp1}}}}{V_{max}A_{MFO_{liver_{sp2}}}} = \frac{[V/S]_{MFO_{liver_{sp1}}}}{[V/S]_{MFO_{liver_{sp2}}}}$$

where the subscripts sp1 and sp2 denote species 1 and 2 (e.g., mouse and rat). Using the apparent in vivo Vmax and *in vitro* [V/S] data reported in Reitz et al. [Exs. 7–225 and 21–53], it was possible to compute mouse:rat, hamster:mouse and rat:hamster ratios for in vivo Vmax and *in vitro* [V/S] as shown in table VI–11, below.

TABLE VI–11.—Interspecies Comparison of MFO Activity

Species ratio	Ratios of MFO enzymatic activity		
	in vivo Vmax	in vitro [V/S]	Fold-Difference *
Rat: mouse	0.49	0.36	1.36
Mouse: hamster	1.20	0.79	1.53
Hamster: rat	0.59	0.28	2.06

* Ratio of values in *in vivo* Vmax column to values in *in vitro* [V/S] column.

The assumption was made that the use of an *in vitro* ratio as a surrogate for an *in vivo* ratio is unbiased (i.e., $err_{vivo/vitro}$ should be centered on a value of 1). The mean of the three estimates of fold-difference (1.65) is our best estimate of a GSD for $err_{vivo/vitro}$. Thus, the prior probability distribution for $err_{vivo/vitro}$ was modeled as a lognormal variate with expected value 1.0 and GSD of 1.65.

(x) Monte Carlo simulation to obtain a prior probability distribution for A2. The above prior probability distributions for [V/S]GST-lung, [V/S]GST-liver and $err_{vivo/vitro}$ were independently sampled by Monte Carlo techniques (n = 5000) and combined to give a prior probability distribution for A2 for use in Bayesian analysis with the human open chamber data. The resulting distribution was well described as a lognormal variate with a GM of 0.236 and a GSD of 2.0.

(3) Human in vivo data and simulating occupational exposure. Bayesian updating was performed with the same human *in vivo* data used in the main analysis. These data consisted of time serial measurements of exhaled breath and venous blood concentrations of MC for 6 human volunteers exposed to 100 and 350 ppm MC for 6 hours. Unfortunately, the data have only been reported as averages of the 6 subject-specific observations at each time point. When simulating the human data, subjects were assumed to be at rest (i.e., work load set equal to 0), and the reported average body weight for the six subjects (86 kg) was assumed to be known without error.

A single human occupational exposure was simulated: constant exposure to 25 ppm MC for 8-hours per day and 5 days per week.

(4) Distribution of human metabolized dose and sensitivity analysis. The distribution for GST metabolism in the human lung resulting from simulated occupational exposure to 25 ppm MC had a median and mean of 0.139 and 0.192 mg/day/liter lung, about 3-fold less than values obtained using the allometrically scaled Kf.

From the sensitivity analysis, Kf and A2′ exhibited the strongest pairwise correlations with predicted lung GST metabolism, with all other parameters having considerably smaller correlation coefficients. Indeed, other than PC.mar (partition coefficient air:marrow), all other parameters were only weakly correlated with GST lung metabolism. These results differ somewhat from those obtained when using an allometrically scaled Kf, and reflect the effect of greater variability in a Kf based on the parallelogram method.

(5) Posterior distributions in the ''parallelogram method'' analysis. The posterior distributions for many model parameters were considerably tighter than their corresponding prior distributions, most notably for fractional blood flow and partition coefficient parameters. Similar results were obtained in the main analysis. In general, medians and %CVs of the posterior distributions were similar to those in the main analysis, with the exception of Kf, which was expected, given its revised prior distribution. However, differences among the posterior distributions for Kf were less than expected due to an appreciable shift toward larger values (and some tightening) in the posterior distribution for the parallelogram-based Kf relative to its prior distribution. Thus, it would appear that the data had some information about plausible values of Kf.

The results of the covariance analysis indicated that the covariance structure was fairly similar to the results from the main analysis, with moderate to high pairwise correlations among 15 pairs of parameters.

G. Results of OSHA's PBPK Risk Assessments; Discussion

Summary statistics for OSHA's main analysis modifying the other analysis and the alternative (parallelogram) analysis are reported in Table VI–12. From the main analysis, the MLE of excess cancer risk obtained using the upper 95th percentile of the human internal dose distribution was 3.62/1000, for an occupational lifetime exposure to 25 ppm MC. The MLE of cancer risk obtained using the mean of the human internal dose distribution was 1.24/1000. The alternative (parallelogram) analysis yielded slightly lower estimates of risk. In that analysis, the MLE of cancer risk using the upper 95th percentile of the human internal dose distribution was 1.23/1000. The MLE of cancer risk for the alternative analysis using the mean of the human internal dose distribution was 0.40/1000. After evaluating the methodologies and uncertainties in the two analyses, OSHA determined that the main analysis was most appropriate for the Agency's final risk assessment and the MLE of cancer risk using the upper 95th percentile of the human internal dose distribution was best supported as OSHA's final MC risk estimate. Therefore, OSHA's final risk estimate for occupational lifetime exposure to MC at 25 ppm is 3.62/1000.

TABLE VI–12.—Summary Statistics on Estimates of Extra Cancer Risk From Occupational Exposure to 25 ppm MC FOR 8 HRS/DAY, 5 DAYS/WK FOR 45 YEARS

Computational approach	Summary statistics for distributions of extra risk				
	95% **	Mean	%CV *	Skewness	Kurtosis
Maximum likelihood fitting: Dependence case.	3.62 *** per 1000	1.24 per 1000	103	2.2	10.2

TABLE VI–12.—Summary Statistics on Estimates of Extra Cancer Risk From Occupational Exposure to 25 ppm MC FOR 8 HRS/DAY, 5 DAYS/WK FOR 45 YEARS—Continued

Computational approach	Summary statistics for distributions of extra risk				
	95% **	Mean	%CV *	Skewness	Kurtosis
Maximum likelihood fitting: Independence case..	2.43 per 1000	0.79 per 1000	113	2.3	11.3

* %CV denotes coefficient of variation ([standard deviation/mean] x 100).
** 95% denotes the 95th percentile value of the distribution of GST matabolites for extra cancer risk.
*** OSHA's final risk estimate.

Figure VI–1 shows the end result of the main PBPK analysis: the cumulative distribution function of excess lifetime cancer risk ($\log^{10}$ scale) from exposure to 25 ppm MC, 8 hours per day, 5 days per week for 45 years, when estimated using the MLE of the dose-response parameters, GST lung metabolism as the dose surrogate, and a human Kf based on allometric scaling and Bayesian prior information. As described in the main analysis, the ''dependence case'' was used. Several summary statistics can be discerned from this cumulative distribution function: (1) the 95th percentile of this hybrid distribution of uncertainty and heterogeneity gives a risk estimate of 3.62×10^{-3} (point ''A'' in the figure); (2) the mean value of the distribution (point ''B'' in the figure) gives a risk estimate of 1.24×10^{-3}.

BILLING CODE 4510–26–P

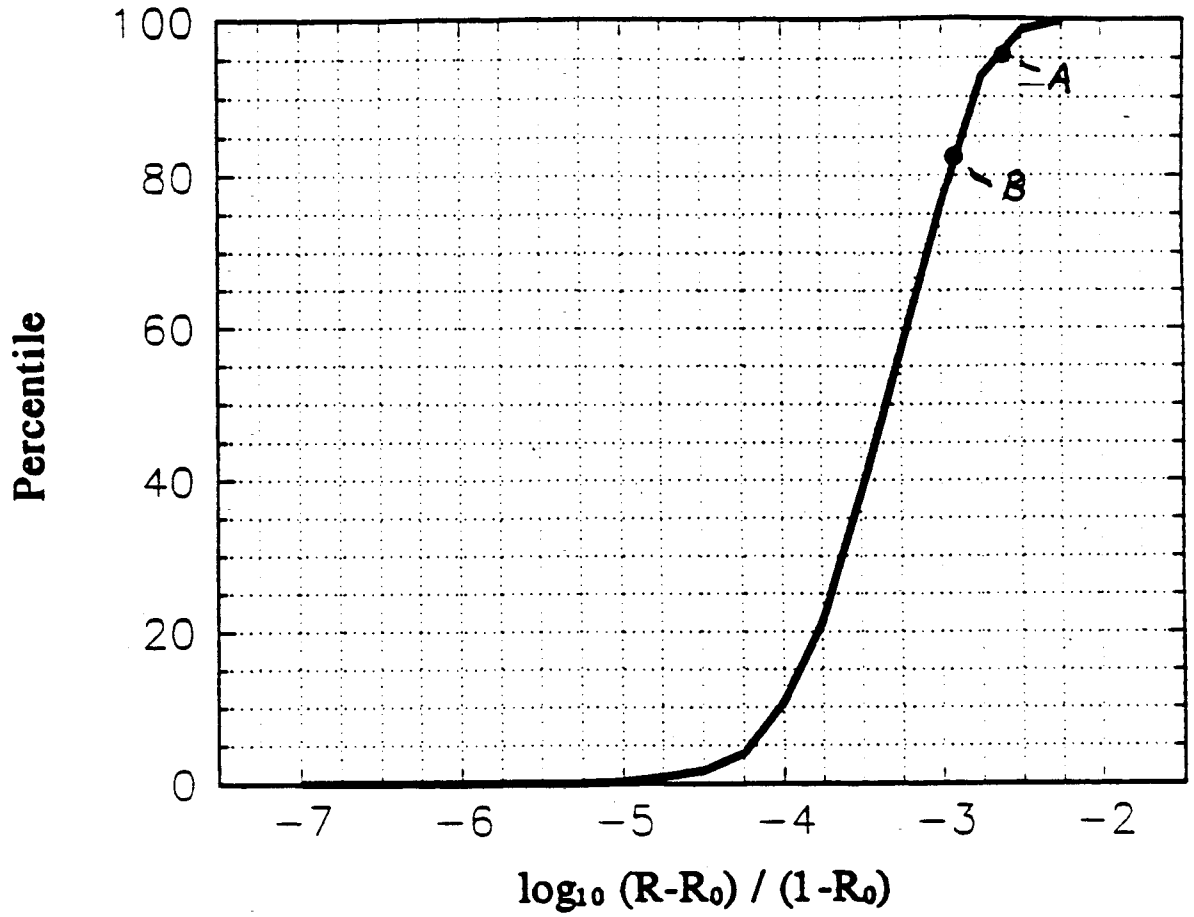

Figure VI-1 *Dependence case*; Estimated cumulative distribution of human cancer risk linked to a 45 year occupational exposure to methylene chloride, at 25 ppm in the air, 8 hours/day, 5 days per year. Generated using the results described in Figure 3.

BILLING CODE 4510–26–C

OSHA conducted the alternative analysis in order to determine the impact of basing the human GST metabolite distribution on allometry (human GST metabolic rates estimated based on the relative size of animals and humans) versus the parallelogram approach (human GST metabolic rates based on ratio of various rodent *in vitro*: *in vivo* metabolic rates applied to human *in vitro* rates) on risk estimates. As discussed in greater detail above, allometry predicts that one would expect that humans have approximately seven-fold less GST activity than mice. The parallelogram approach, on the other hand, predicts approximately 18-fold less GST activity in humans than in mice. After analyzing the available data, OSHA has determined that the allometric assumptions are best supported by the scientific literature, primarily because of the lack of human *in vivo* GST data and the lack of validation of the parallelogram approach. The Agency has therefore used that approach in its final (main) estimate of risk, but has also presented an alternative analysis using the parallelogram methodology.

During the rulemaking, studies were submitted to the Agency by HSIA challenging the relevance of the mouse data for estimating human cancer risks. However, as described in detail previously, if one examines the HSIA data critically, it is clear that the studies most likely could not detect differences in metabolic activity (and hence in risk) between mice and humans of the magnitude predicted by allometry. For example, the lack of detection of an increase in DNA ss breaks in human cells compared to mouse cells could be explained because the methodology used could not detect an increase in ss breaks 7-fold smaller than that observed in mice. Clearly, an 18-fold difference, as predicted by the parallelogram method, would be even harder to detect.

Moreover, if the human *in vitro* data are examined more closely, it becomes apparent that the *in vitro*: *in vivo* ratios calculated for the 35 individual humans who have been studied were as low as 4.6 (the median value in this series was 24). Therefore, the use of allometry (ratio = 7) or the parallelogram approach (ratio = 18) would lead to risk estimates that clearly underestimate the risks for some individuals. In addition, RNA adduct data [Ex. 126–25] indicate that exposure of human cells to MC results in only a 3-fold lower amount of RNA adducts than formed in mouse cells. This ratio may not be a close surrogate for the GST ratio, but it does heighten concern that both PBPK approaches may be underestimating cancer risks from occupational exposure to MC, because humans may be appreciably less sensitive than mice.

The distribution of risk presented in either the main or the alternative analysis most closely reflects uncertainty about risk for some randomly chosen worker (with respect to work intensity and body weight), chosen among the population of workers with physiologic, anatomic, and metabolic attributes similar to those of the average subject from the Dow human study group. The Dow pharmacokinetic data did not contain individual data on the 6 subjects, so the results obtained and the predictions made are conditioned by the use of averages. This means that the model is truly only applicable to people who physiologically and biochemically resemble the Dow group of six subjects. Although six subjects do not represent a large data base from which to draw a representative PBPK sample, this is much more human data than is usually available to base a risk assessment on. In fact, in OSHA's preliminary quantitative risk assessment, point estimates were used for body weight, breathing rates, etc. to represent the entire working population with a single ''average'' number. Therefore, this sample, although small, represents a significant improvement over the point estimates of human parameter values for PBPK modeling. Although these are the best data available, the small number of individuals upon which the human parameter values are based increases concern that the Agency may be underestimating risks for a significant portion of the working population by relying upon these values and using PBPK modeling to estimate human internal doses. OSHA considered making an ad hoc inflation of the variance of the distributions of human GST enzyme kinetics parameters in order to account for some of this unmeasured heterogeneity (as recommended by the NAS Committee report discussed above), but decided not to make this ''conservative'' choice but instead to rely on the unadjusted analyses.

OSHA has chosen for its final risk estimate to couple one measure of central tendency (the MLE of the dose-response parameters) with a somewhat ''conservative'' measure (the 95th percentile of the distribution of human GST metabolites (internal dose)). Congress and the courts have permitted—indeed, encouraged—OSHA to consider ''conservative'' responses to both uncertainty and human variability. The OSH Act addresses the latter when it refers, for example, to OSHA's responsibility to set standards such that ''no employee shall suffer material impairment of health* * *;'' a standard that only considered risk to the average employee clearly would not be responsive to the statute. Similarly, the 1980 ''Benzene decision'' affirmed that ''the Agency is free to use conservative assumptions in interpreting the data with respect to carcinogens, risking error on the side of over-protection rather than under-protection.''

In past rulemakings, OSHA has frequently estimated carcinogenic potency via the MLE of the multistage model parameters. The Agency has recently received comments, particularly in a public meeting in February 1996 on risk assessment issues surrounding the first phase of its ''PEL Update'' process, critical of the MLE on the grounds that this estimator can be highly unstable with respect to small fluctuations in the observed bioassay response rates. Although OSHA may in the future move to a different estimator, such as the mean value of the likelihood function of the multistage model parameters, such a change would have neglible practical impact in the case of MC. The observed data in the NTP mouse bioassay follow a nearly precisely linear trend, so the MLE, mean and UCL estimates are all very nearly equivalent to each other.

However, OSHA needs to take particular care not to underestimate risk when it departs from a relatively simple methodology (in this case, the assumption that administered dose is the most relevant measure of exposure) in favor of a relatively more complex and computationally- intensive methodology (in this case, that the human lung GST metabolite, calculated via a PBPK model, is the most relevant measure of exposure). This is even more important in this particular PBPK analysis, because the variance of the output distributions represents an unknown hybrid of uncertainty in the various parameters and true heterogeneity among the humans exposed to MC. As Clewell stated with respect to his own PBPK analysis (see discussion above), the 95th percentile estimator provides a modicum of assurance that the risk to the average human—and hence the population risk—is not underestimated.

Moreover, it is critical to use an estimator other than the central tendency here so that it will not be inevitable that the risk to a human of above-average susceptibility (due to enzyme kinetics that produce relatively more reactive metabolite per unit of administered dose, or due to other attributes related to body weight, organ

volumes, partition coefficients, etc.) is not underestimated, potentially by a substantial amount. Any ''conservatism'' introduced by using the 95th percentile of the PBPK output distribution is further attenuated by the unmeasured model uncertainty inherent in this more complex model structure. Several aspects of the model itself are known to be oversimplifications (e.g., assuming the lung is the only tissue at risk); therefore, the resulting risk distributions could be biased downward.

Finally, it is important to note that there is no risk of ''cascading conservatism'' with this 95th percentile estimator; the individual model parameters are permitted to vary over their entire ranges, and the selected percentile is only applied to the distribution resulting from the combined influence of all parameters. Furthermore, the newest refinements to the model ensure that the 95th percentile is not affected by any probability assigned to impossible combinations of parameters. The attention paid to issues of mass balance, covariance structure and truncation ensures that this percentile represents a fully plausible set of input parameters. In sum, the combination of the MLE of the multistage parameters and the 95th percentile of the PBPK output distribution represents a reasonable attempt to account for uncertainty and variability without unduly exacerbating the magnitude or the probability of underestimation of errors.

H. Comparison of Animal-Based Risk Estimates With ''Non-Positive'' Epidemiology Data

Direct comparisons between animal bioassays and human epidemiological studies are difficult to make because experimental protocols between animal and human studies differ substantially. Animals are generally exposed to a fixed dose of a chemical, for several hours per day, from approximately 6–8 weeks of age until study termination, which is usually at 2 years. This would be chronologically equivalent to a human exposure that starts when a human is approximately 4–5 years old and continuing until the human is approximately 74 years old (assuming a 74 year average life-span for humans) [Ex. 89]. This clearly differs from the typical pattern of occupational exposure encountered in epidemiological studies of worker populations. For example, in the Kodak cohort, the workers were never exposed to a constant level of MC; exposure to MC for these workers did not start until their adult life; and most of them were exposed to the chemical for less than one third of their life-span.

Exposure to MC has been found to induce lung and liver cancer in mice and mammary tumors in rats. As discussed above, there are positive epidemiology studies which suggest an association between MC exposure and cancer risk. Because exposure data are inadequate or unavailable, it is not possible to quantify the risks in these studies. OSHA acknowledges that there are also non-positive epidemiology studies.

In 1986, Crump analyzed the preliminary results from the 1964–70 Kodak cohort followed through 1984 and compared them to the rodent bioassay results. The results from the Kodak epidemiological study have also been used by Tollefson et al. [Ex. 7–249], Hearne [Ex. 91–D], and NIOSH to compare the predictions of excess cancer risk from the animal risk assessment models. In addition, Hearne used data from the cellulose triacetate fiber study in Cumberland, Maryland, and a different analytical approach, to validate the excess cancer risk predicted by the animal data [Ex. 91–D]. The details of these analyses can be found in the cited exhibits. OSHA has analyzed the different approaches to assessing the mouse bioassay in light of the epidemiology data and has determined that the approach taken by NIOSH (summarized below) represents the most comprehensive and clearest way to examine those data. OSHA also agrees with the conclusions reached by NIOSH, that the epidemiology results and the mouse bioassay data are not inconsistent with each other.

NIOSH compared the confidence intervals for the standardized mortality ratios (SMRs) from the Kodak study with the predicted confidence intervals derived from OSHA's risk assessment models from the NPRM [Ex. 89]. To estimate predicted SMRs using the multistage model, NIOSH used the following approach:

1. The expected excess number of deaths in each of the exposure groups was derived by multiplying the number of workers in each exposure group by the excess risk as determined by the multistage model (after correcting for dose equivalence between animals and humans, and differences in length of follow-up).

2. This number of expected deaths, derived from the animal data, was then added to the expected (denoted E_p) number of deaths which were derived from the Kodak study, after correcting for the HWE, (this can be viewed as the background risk) to estimate the number of ''observed'' deaths that would have been predicted by the multistage model assuming it was valid for humans (denoted O_p).

3. O_p was then divided by E_p to calculate predicted SMRs and 95% confidence intervals, where calculated.

NIOSH's results indicated that the non-positive findings from the Kodak study were not inconsistent with the predicted risk estimates in OSHA's risk assessment. The predicted confidence intervals from the animal multistage model were completely nested within the observed confidence intervals from the Kodak study. This is not to suggest that results from this non-positive epidemiology study are equivalent to the positive results from the animal inhalation study. Rather, based on these findings, one can conclude that the non-positive results from the Kodak epidemiologic study were not of sufficient power to contradict risk predictions of the multistage model developed from the animal bioassay data (when appropriate adjustments for differences in study protocol were taken into account).

Basically, the Kodak study examined approximately 1000 workers whose average MC exposure was 26 ppm. Therefore, the animal-based potency estimates would predict only about 3 excess cancer deaths in that cohort (the risk at 26 ppm is approximately 3 per 1000), even if they were followed for many decades after exposure ceased. This small predicted excess is clearly too small an increment to be observable with statistical confidence, considering the much larger background of cancer present in the human population. The differences between the NIOSH and Hearne analyses essentially represent different ways to estimate the ''signal-to-noise'' ratio for the Kodak study; OSHA believes that any reasonable method of estimating this ratio would conclude that the Kodak study has insufficient power to rule out a ''signal'' of significant human risk.

NIOSH's approach for adjusting for the healthy worker effect (HWE) was criticized in the comments to the record submitted by Hearne. Hearne stated that the HWE is unlikely to be present in long term cancer studies and therefore an adjustment for the HWE is not necessary [Ex. 91–D]. Hearne argued that since the HWE diminishes with time, the healthy worker effect would have been minimal in the 1946–70 Kodak cohort because the median follow-up period was 32 years and that only 20% of the cohort members were still actively employed [Tr. 10/15/92].

There is evidence in the literature showing that the HWE can be weaker for some types of cancer than for other causes of death; however, in this case NIOSH believed and OSHA agreed that the difference between control and

exposed populations reflected an HWE for cancer. In addition, results from a similar analysis done by NIOSH without the HWE adjustment did not contradict the results including the HWE adjustment. NIOSH testified [Tr. 985–6, 9/21/92] that there would be a difference in the results obtained when adjusting for HWE and the unadjusted results. However, the conclusions reached would not be different. In other words, the analysis still supported the conclusion that the epidemiologic and mouse bioassay results were not inconsistent with each other. OSHA supports NIOSH's position on the use of an adjustment factor for HWE in this cohort. Other criticisms of NIOSH's approach can be found in the hearing transcripts and post-hearing comments. OSHA has evaluated these methodological criticisms and has determined that NIOSH used the best available methodology in analyzing this issue and that their conclusions are supported by those arrived at independently by Crump and by Tollefson et al.

Specifically, NIOSH predicted 23.25 deaths from cancers (at all sites) in the full cohort, after adjusting for the HWE. This value is closer to the observed number (22) than is the unadjusted expected number of deaths (29.61). Looking at lung cancer deaths separately, NIOSH predicted 22.36 deaths for the entire cohort (adjusted for HWE) compared with 22 observed and 28.67 expected by Hearne. Hearne observed no deaths from liver cancer in the entire cohort (1.14 deaths were expected). NIOSH predicted 0.88 deaths from liver cancer when they adjusted for the HWE.

OSHA believes that NIOSH's approach in comparing results from an animal bioassay to those of an epidemiological study is the most reasonable comparison between data sets because it is more accurate and better addresses computational and experimental issues inherent in the data sets. The Agency has evaluated the extent to which the cancer risk calculated using the human data is consistent with the cancer risk calculated using animal data. Based on its review of those studies, OSHA concluded that the human epidemiology results are not inconsistent with the animal bioassays and has determined that the bioassays are the appropriate basis for its quantitative risk assessment.

I. Conclusions

OSHA has determined that MC is a potential occupational carcinogen and has conducted a quantitative risk assessment in order to estimate human risks of cancer after occupational exposure to MC. The Agency reviewed all of the human and animal data on MC and determined that MC is carcinogenic in mice and in rats, causing tumors at multiple sites, in both species, and in both sexes of animals. Some epidemiologic data also indicate an association between MC exposure and excess cancer in exposed workers (statistically significant increases in biliary cancers in textile workers and astrocytic brain cancer in workers exposed to MC in solvent applications). Mechanistic data indicate that MC is likely to be metabolized to a genotoxic carcinogen. MC has been clearly shown to be metabolized by similar enzymatic pathways in rodents and humans, indicating that the metabolic processes which produce cancer in mice and rats are also present in humans. Finally, no data have been presented which demonstrate that the mouse is an inappropriate model for humans because of a physiological or biochemical component or process. Therefore, the Agency has determined that it is appropriate to assess the carcinogenic risks of MC using the NTP mouse bioassay dose-response.

The NTP mouse MC bioassays demonstrated a clear dose-tumor response relationship. OSHA determined that the NTP female mouse lung tumor response was the best data set on which to base a quantitative analysis because there was a clear dose-response, low background tumor incidence and it represented the most sensitive tumor site/sex combination.

After examining the PBPK models submitted to the Agency, OSHA concluded that PBPK modeling estimates of the amount of GST metabolites produced are reasonable dose surrogates for MC and are supported by substantial scientific evidence in the record. For that reason, OSHA has used PBPK modeling in its final risk assessment. OSHA reviewed methodologies used in PBPK models submitted to the Agency and decided to modify and expand an existing model. Specifically, a Bayesian analysis was conducted as described above. Use of the Bayesian model analysis was a logical next step in development and use of pharmacokinetic models for MC. It has great advantages in accounting for the covariance of the PBPK parameters and incorporating distributions of physiological parameters obtained from the scientific literature. OSHA's final estimates of risk use the PBPK analysis described above and are based on the MLE of the dose-response parameters using the upper 95th percentile of the human internal dose distribution. For an occupational lifetime exposure to 25 ppm MC, OSHA estimates an excess risk of 3.6 MC-induced cancer deaths per 1000 workers.

VII. Significance of Risk

A. Introduction.

In the 1980 Benzene decision, the Supreme Court, in its discussion of the level of risk that Congress authorized OSHA to regulate, indicated its view of the boundaries of acceptable and unacceptable risk. The Court stated:

> It is the Agency's responsibility to determine in the first instance what it considers to be a ''significant'' risk. Some risks are plainly acceptable and others are plainly unacceptable. If for example, the odds are one in a billion that a person will die from cancer by taking a drink of chlorinated water, the risk clearly could not be considered significant. On the other hand, if the odds are one in a thousand that regular inhalation of gasoline vapors that are 2 percent benzene will be fatal, a reasonable person might well consider the risk significant and take the appropriate steps to decrease or eliminate it. (I.U.D. v. A.P.I., 448 U.S. 607, 655).

So a risk of 1/1000 (10^{-3}) is clearly significant. It represents the uppermost end of a million-fold range suggested by the Court, somewhere below which the boundary of acceptable versus unacceptable risk must fall.

The Court further stated that ''while the Agency must support its findings that a certain level of risk exists with substantial evidence, we recognize that its determination that a particular level of risk is significant will be based largely on policy considerations.'' The Court added that the significant risk determination required by the OSH Act is ''not a mathematical straitjacket,'' and that ''OSHA is not required to support its findings with anything approaching scientific certainty.'' The Court ruled that ''a reviewing court [is] to give OSHA some leeway where its findings must be made on the frontiers of scientific knowledge [and that] . . . the Agency is free to use conservative assumptions in interpreting the data with respect to carcinogens, risking error on the side of overprotection rather than underprotection'' (448 U.S. at 655, 656).

Nonetheless, OSHA has taken various steps that make it fairly confident its risk assessment methodology is not ''conservative'' (in the sense of erring on the side of overprotection). For example, there are several options for extrapolating human risks from animal data via interspecies scaling factors. The plausible factors range from body weight extrapolation (risks equivalent at equivalent body weights) to (body

weight)$^{2/3}$ (risks equivalent at equivalent surface areas). Intermediate values have also been used, and the value of (body weight)$^{3/4}$, which is supported by physiological theory and empirical evidence, is generally considered to be the midpoint of the plausible values. (Body weight)$^{2/3}$ is the most conservative value in this series. Body weight extrapolation is the least conservative. OSHA has generally used body weight extrapolation in assessing risks from animal data, our approach which tends to be significantly less conservative than the other methodologies and most likely is less conservative even than the central tendency of the plausible values.

Other examples in OSHA's risk assessment methodology where the Agency does not use a conservative approach are selection of the maximum likelihood estimator to parameterize the dose-response function rather than the upper 95% confidence limit, and the use of site-specific tumor incidence rather than pooled tumor response in determining the dose-response function for a chemical agent.

OSHA's overall analytic approach to regulating occupational exposure to particular substances is a four-step process consistent with recent court interpretations of the OSH Act, such as the Benzene decision, and rational, objective policy formulation. In the first step, OSHA quantifies the pertinent health risks, to the extent possible, performing quantitative risk assessments. The Agency considers a number of factors to determine whether the substance to be regulated poses a significant risk to workers. These factors include the type of risk posed, the quality of the underlying data, the plausibility and precision of the risk assessment, the statistical significance of the findings and the magnitude of risk [48 FR 1864, January 14, 1983]. In the second step, OSHA considers which, if any, of the regulatory options being considered will substantially reduce the identified risks. In the third step, OSHA looks at the best available data to set permissible exposure limits that, to the extent possible, both protect employees from significant risks and are also technologically and economically feasible. In the fourth and final step, OSHA considers the most cost-effective way to fulfill its statutory mandate by crafting regulations that allow employers to reach the feasible PEL as efficiently as possible.

B. Review of Data Quality and Statistical Significance

The former OSHA standard for MC was designed to prevent irritation and injury to the neurological system of the employees exposed to MC. In 1985, the National Toxicology Program (NTP) released the results of their MC rodent lifetime bioassays. Those results indicated that MC is carcinogenic to rats and mice. As discussed in the Events Leading to the Final Standard section, based on the NTP findings, EPA now considers MC a probable human carcinogen, and NIOSH regards MC as a potential occupational carcinogen and recommends controlling the exposure to MC to the lowest feasible level. In 1988, ACGIH classified MC as an industrial substance suspected of carcinogenic potential for humans.

As discussed in the Health Effects section, OSHA has determined, based on the NTP data, that MC is a potential occupational carcinogen. This conclusion is supported by high-quality data in both rodent species. Having determined, as discussed in the Quantitative Risk Assessment section, that the NTP study provided suitable data for quantitative analysis, OSHA performed quantitative risk assessments to determine if MC exposure at the current PEL presents a significant risk.

As discussed in the Health Effects and Quantitative Risk Assessment sections, OSHA evaluated four MC rodent bioassays [Exs. 4–35, 4–25, 7–29, 7–30, 7–31] to select the most appropriate bioassay as the basis for a quantitative risk assessment. These bioassays were conducted in three rodent species (rat, mouse, and hamster) using two routes of administration (oral and inhalation). The NTP study (rat and mouse, inhalation) was chosen for a quantitative risk assessment because it provides the clearest toxicological and statistical evidence of the carcinogenicity of MC [Exs. 12, 7–127] and because the studies were of the highest data quality. In the NTP study, MC induced significant increases both in the incidence and multiplicity of alveolar/bronchiolar and hepatocellular neoplasms in male and female mice. In rats, dose-related, statistically significant increases in mammary tumors were also observed. OSHA chose the female mouse tumor response as the basis of its quantitative risk assessment, because of the high quality of data, the clear dose response of liver and lung tumors and the low background tumor incidence. OSHA chose female mouse lung tumors as the specific tumor site for its final quantitative risk assessment. There is no *a priori* reason to prefer the mouse lung tumor response over the liver tumor response because both data sets were of high quality, showed a clear dose-response relationship and had low background tumor incidence. In fact, in the NPRM, the Agency reported estimates of risk generated using both sites. However, to reduce the complexity of the final PBPK analysis, which required highly intensive computations, OSHA chose one site (the female mouse lung tumor response) for its final risk estimates. The risks calculated using the female mouse liver response would likely be only slightly lower than those calculated using the lung tumor response. On the other hand, pooling the total number of tumor-bearing animals having either a lung or liver tumor (or both) would have yielded risk estimates higher than OSHA's final values.

Once the alveolar/bronchiolar neoplasms in female mice were chosen as the most appropriate data set, the multistage model of carcinogenesis was used to predict a lifetime excess risk of cancer from occupational exposure to MC at several concentration levels. The multistage model is a mechanistic model based on the biological assumption that cancer is induced by carcinogens through a series of stages. The model may be conservative, in the sense that it risks error on the side of overprotection rather than underprotection, because it assumes no threshold for carcinogenesis and because it is approximately linear at low doses, although there are other plausible models of carcinogenesis which are more conservative. The Agency believes that this model conforms most closely to what we know of the etiology of cancer. There is no evidence that the multistage model is biologically incorrect, especially for genotoxic carcinogens, which MC most likely is. OSHA's preference is consistent with the position of the Office of Science and Technology Policy which recommends that ''when data and information are limited, and when much uncertainty exists regarding the mechanisms of carcinogenic action, models or procedures that incorporate low-dose linearity are preferred when compatible with limited information'' [Ex. 7–227].

In the NPRM, OSHA solicited comment and testimony on the application of physiologically-based pharmacokinetic (PBPK) modeling to refine the MC risk assessment. There was an intensive discussion of pharmacokinetic issues during the hearings and in comments and briefs submitted to OSHA. PBPK modeling is used to account for metabolic and pharmacokinetic differences between rodents and humans and when extrapolating from high experimental doses to lower occupational exposures. OSHA has evaluated several risk assessments produced using

pharmacokinetic models. Discussion of the major issues surrounding the use of PBPK in risk assessment can be found in the Quantitative Risk Assessment section. Although serious questions remain concerning the application of these models in the MC risk assessment, the Agency has used the estimates generated via PBPK modeling as its final estimate of the carcinogenic risk of MC exposure.

In accepting PBPK analysis, the Agency wanted to be able to utilize all of the data available and appropriate for the analysis. OSHA was also concerned that the uncertainties and inter-individual variabilities in PBPK models were insufficiently quantified to allow analysis of the impact of those uncertainties on the risk. Several rulemaking participants have conducted sensitivity and uncertainty analyses, the most extensive of which was that submitted by Mr. Harvey Clewell on behalf of the U.S. Navy. These analyses show the impact of the variability and uncertainty of the parameters which are used in the PBPK model and suggest methods of quantifying the impact of that uncertainty on the risk estimates.

OSHA has determined that the PBPK data are of sufficient weight to warrant reliance on PBPK modeling to develop a risk estimate in the specific case of MC, a chemical with more extensive information on metabolism than exists for most other substances. To that end, OSHA adopted a Bayesian approach in which all of the physiological and MC-specific data could be used to generate a distribution of estimates of the carcinogenic risks of MC. OSHA used the mean and the upper 95th percentile estimator of the distribution of human PBPK parameters, coupled with the maximum likelihood estimator of cancer potency, to generate its final estimates of risks.

As discussed in more detail in the Health Effects Section above, human data concerning the carcinogenicity of MC were presented in several epidemiology studies. In a study of cellulose triacetate fiber production (MC used as solvent) workers, an increased incidence of liver/biliary cancer [Ex. 7–260] was noted. Although the case numbers were small and the exposure information limited, this epidemiological evidence is consistent with findings from animal studies and indicates that there may be an association between human cancer risk and MC exposure. A study of workers in photographic film production was non-positive [7–163]. However, the exposures experienced by these workers were likely to have been much less than those in the cellulose triacetate fiber plant and, as discussed in the quantitative risk assessment section, the study lacked the power to detect the magnitude of the increase in cancer deaths that would have been predicted given only the bioassay results. A case-control study conducted by the National Cancer Institute showed a statistically significant association between occupational MC exposure and development of astrocytic brain cancer. Exposure levels could not be determined in this study. The results of the epidemiological studies summarized here were not inconsistent with the results of the animal-based cancer potency estimate.

C. Material Impairment of Health

MC is a potential occupational carcinogen. Cancer is a material impairment of health. OSHA has set the 8-hour TWA PEL primarily to reduce the risk to employees of developing cancer.

The STEL of 125 ppm averaged over 15 minutes is primarily designed to protect against MC's non-cancer risks. As discussed in the Health Effects section, there are substantial risks of CNS effects and cardiac toxicity resulting from acute exposure to MC and its metabolites. CNS effects have been demonstrated in workers at concentrations as low as 175 ppm [Ex. 7–153] and a STEL of 125 ppm for 15 minutes would thus be protective against the CNS effects described. Metabolism of MC to CO increases the body burden of COHb in exposed workers. Levels of COHb above 3% COHb may exacerbate angina symptoms and reduce exercise tolerance in workers with silent or symptomatic heart disease. Smokers are at higher risk for these effects because of the already increased COHb associated with smoking (COHb ranges from 2 to 10% in most smokers). Limiting short term exposure to 125 ppm for 15 minutes will keep COHb levels due to MC exposure below the 3% level, protecting the sub-population of workers with silent or symptomatic heart disease and also limiting the additional COHb burden in smokers.

In addition to protecting against CNS and cardiac effects, there is evidence that reducing the GST metabolite production by reducing short term exposure to high concentrations of MC may also lower the cancer risk. This is because metabolism by the MFO pathway (not generally believed to be associated with carcinogenesis) appears to saturate beginning around 100 ppm. This means that exposure to higher concentrations of MC would lead to increased metabolism by the GST pathway (the putative carcinogenic pathway) and therefore, greater than proportionally increased risk.

All of the health effects averted by reducing MC exposure are potentially or likely to be fatal, and this clearly represents ''material impairment of health'' as defined by the OSH Act and case law.

D. Risk Estimates

OSHA's final estimate of excess cancer risks at the current PEL of 500 ppm (8-hour TWA) is 126 per 1000. The risk at the new PEL of 25 ppm is 3.62 per 1000. The risk at 25 ppm is similar to the risk estimated in OSHA's preliminary quantitative risk assessment based on applied dose of MC on a mg/kg/day basis (2.3 per 1000 workers) and clearly supports a PEL of 25 ppm. Risks greater than or equal to 10^{-3} are clearly significant and the Agency deems them unacceptably high. However, OSHA did not collect the data necessary to document the feasibility of a PEL below 25 ppm across all affected industry sectors, and so the Agency has set the PEL at 25 ppm in the final rule. OSHA intends in the future to gather more information pertaining to the feasibility of lower PELs.

E. ''Significant Risk'' Policy Issues

Further guidance for the Agency in evaluating significant risk and narrowing the million-fold range provided in the ''Benzene decision'' is provided by an examination of occupational risk rates, legislative intent, and the academic literature on ''acceptable risk'' issues. For example, in the high risk occupations of mining and quarrying, the average risk of death from an occupational injury or an acute occupationally-related illness over a lifetime of employment (45 years) is 15.1 per 1,000 workers. The typical occupational risk of deaths for all manufacturing industries is 1.98 per 1,000. Typical lifetime occupational risk of death in an occupation of relatively low risk, like retail trade, is 0.82 per 1,000. (These rates are averages derived from 1984–1986 Bureau of Labor Statistics data for employers with 11 or more employees, adjusted to 45 years of employment, for 50 weeks per year).

Congress passed the Occupational Safety and Health Act of 1970 because of a determination that occupational safety and health risks were too high. Congress therefore gave OSHA authority to reduce significant risks when it is feasible to do so. Within this context, OSHA's final estimate of risk from occupational exposure to MC at the current 8-hour TWA PEL (126 per 1000) is substantially higher than other risks

that OSHA has concluded are significant, is substantially higher than the risk of fatality in some high-risk occupations, and is substantially higher than the example presented by the Supreme Court. Moreover, a risk of 3.62 per 1000 at 25 ppm is also clearly significant; therefore, the PEL must be set at least as low as the level of 25 ppm documented as feasible across all industries.

Further, applying the rationale of the Benzene decision, the other risk assessments presented by OSHA and the risk estimates presented by rulemaking participants, including the HSIA (see Table VII–1, below), all support OSHA's conclusion that the human cancer risk for employees exposed to MC above 25 ppm as an 8-hour TWA is significant.

TABLE VII–1.—LIFETIME EXCESS RISK ESTIMATES (PER 1000) FROM OCCUPATIONAL EXPOSURE BASED ON FEMALE MOUSE LUNG TUMOR DATA

Model	MLE (UCL)**		
	25 ppm	50 ppm	500 ppm
OSHA NPRM Risk Assessment (mg/kg/d, BW extrapolation) without PBPK Adjustment	2.32 (2.97)	4.64 (5.92)	45.5 (57.7)
PPM to PPM extrapolation without PBPK Adjustment	11.3 (14.4)	22.4 (28.5)	203 (251)
PBPK Reitz female mouse lung—Reitz human (HSIA assumptions)	0.43 (0.53)	0.93 (1.17)	14.3 (17.9)
PBPK Reitz female mouse lung—Dankovic average human (NIOSH assumptions)	0.81 (1.02)	1.69 (2.12)	15.0 (18.7)
PBPK Clewell female mouse lung—Clewell human (Navy assumptions)*	0.91 (1.14)	1.88 (2.36)	27.5 (34.2)
OSHA Final Risk Assessment (female mouse lung with PBPK)	3.62	7.47	125.8

*Upper 95th percentile of the GST metabolites distribution was used as input in the multistage model.
**Maximum likelihood estimates are 95th percentile upper confidence limit (in parentheses) of the multistage dose-response function.

In addition to being 100 to 1000 times higher than the risk levels generally regarded by other Federal Agencies as on the boundary between significant and insignificant risk (see, e.g., Travis et al., 1987), and 1000 times higher than the ''acceptable risk'' level Congress set in the 1990 Clean Air Act Amendments, the level of 10^{-3} is within the range where economic studies document a marked nonlinearity. In other words, individuals regard risks this high as qualitatively different from ''smaller'' risks. Although risks below 10^{-3} are not unambiguously significant, depending on the size of the affected population, the benefits associated with the risky activity, and other factors, this policy determination is not relevant to this regulation, since OSHA's final risk estimate is substantially greater than 1 per 1000. Risks at or above 10^{-3} are always significant by any empirical, legal or economic argument available.[2]

Because of the lack of documented feasibility data for potential PELs of less than 25 ppm, OSHA has concluded that there is not enough information available to support lowering the 8-hour TWA PEL or STEL further at this time. However, OSHA has integrated other protective provisions into the final standard to further reduce the risk of developing cancer among employees exposed to MC. Employees exposed to MC at the 8-hour TWA PEL limit without the supplementary provisions would remain at risk of developing adverse health effects, so that inclusion of other protective provisions, such as medical surveillance and employee training, is both necessary and appropriate. The action level will encourage those employers for whom it is feasible to do so to lower exposures below 12.5 ppm to further reduce significant risk. Consequently, the programs triggered by the action level will further decrease the incidence of disease beyond the predicted reductions attributable merely to a lower PEL. As a result, OSHA concludes that its 8-hour TWA PEL of 25 ppm and associated action level (12.5 ppm) and STEL (125 ppm) will reduce significant risk and that employers who comply with the provisions of the standard will be taking reasonable steps to protect their employees from the hazards of MC.

The Agency notes that even at the final PELs, the risks to workers remain clearly significant. OSHA will be gathering information on the risks of, and feasibility of compliance with, PELs less than 25 ppm, to determine whether future rulemaking is appropriate in order to further reduce the MC risks to employees.

VIII. Summary of the Final Economic Analysis

In its Final Economic and Regulatory Flexibility Analysis document, OSHA addresses the significant issues related to technological and economic feasibility and small business impacts raised in the rulemaking process. The Final Economic Analysis is also OSHA's most comprehensive explanation of the standard's practical impact on the regulated community; in the Final Economic Analysis, OSHA explains in detail the Agency's findings and conclusions concerning pre-standard (baseline) conditions, such as exposure levels, in establishments in the regulated community, and discusses how and why the requirements of the standard are expected to eliminate significant risk to the extent feasible. This document also sets forth OSHA's Final Regulatory Flexibility Analysis and the analyses required by Executive Order 12866. This Federal Register preamble and the Final Economic Analysis are integrally related and together present the fullest statement of OSHA's reasoning concerning this standard. The Final Economic and Regulatory Flexibility Analysis, together with supporting appendix material, has been placed in the rulemaking docket for methylene chloride (Ex. 129).

The purpose of the Final Economic Analysis is to:

- Describe the need for a standard governing occupational exposure to methylene chloride;
- Identify the establishments and industries potentially affected by the standard;
- Evaluate the costs, benefits, economic impacts and small business impacts of the standard on affected firms;
- Assess the technological and economic feasibility of the standard for affected establishments, industries, and small businesses;
- Evaluate the availability of effective non-regulatory approaches to the problem of occupational exposure to methylene chloride; and
- Present changes designed to reduce the impact of the standard on small

[2] OSHA also conducted an alternative PBPK analysis that uses all of the available human data on MC metabolism, despite the very limited quantity of data available and the additional bias introduced by adopting the ''parallelogram'' assumptions for interspecies scaling (see Quantitative Risk Assessment for a discussion of this analysis and the uncertainties and biases therein). The risk estimate using this alternative method, 1.2 per 1000, is also unambiguously significant.

firms while meeting the objectives of the OSH Act.

Need for the Standard

OSHA's final methylene chloride (MC) standard covers occupational exposures to this substance, one of the most widely used of all organic solvents, in general industry, construction, and shipyard employment. In all, about 237,000 employees are estimated to be exposed to MC. These workers are exposed to MC in many different ways, including the manufacturing, formulation, distribution, and use of MC-containing products. The most common uses of MC are in paint stripping, metal cleaning, and furniture stripping.

Workers exposed to MC are at significant risk of developing cancer, heart and liver effects, and central nervous system impairments, as well as eye, skin, and mucous membrane irritation. Animal bioassays have shown MC to be carcinogenic in mice and rats of both sexes, and epidemiologic studies in workers have produced suggestive evidence of its carcinogenicity in humans. Acute overexposure to the vapors of MC can lead to central nervous system depression, respiratory paralysis, and death: OSHA receives fatality reports every year involving workers who have died using MC to perform such tasks as stripping floors and removing paint. To protect all MC-exposed workers from these adverse health effects, the final standard lowers the airborne concentration of MC to which workers may be exposed from the current permissible exposure limit (PEL) of 500 ppm as an 8-hour time-weighted average (8-hour TWA) to 25 ppm, and from the Agency's current short-term limit of 1000 ppm as an acceptable ceiling, or 2000 ppm as an acceptable peak above the acceptable ceiling for 5 minutes in any 2-hour period, to a short-term exposure limit (STEL) of 125 ppm, averaged over 15 minutes. (For a detailed discussion of the risks posed to workers by exposure to MC, see the Quantitative Risk Assessment and Significance of Risk sections of the preamble, above.)

OSHA's final MC standard is similar in format and content to other health standards issued under Section (6)(b)(5) of the Act. In addition to setting PELs, the standard requires employers to monitor the exposures of workers; establish regulated areas when exposures may reasonably be expected to exceed one of these PELs; implement engineering and work practice controls to reduce employee exposures to MC; provide respiratory protection to supplement engineering controls where these are not feasible, are insufficient to meet the PELs, or in emergencies; provide other protective clothing and equipment as necessary for employee protection; make industrial hygiene facilities (such as eyewash and emergency showers) available in certain circumstances; provide medical surveillance; train workers about the hazards of MC (as required by OSHA's Hazard Communication Standard); and keep records relating to the standard. The contents of the standard are explained briefly in Chapter I of the Final Economic Analysis and in detail in the Summary and Explanation (Section X of the preamble, below).

Chapter II of the economic analysis describes the uses of methylene chloride and the industries in which such use occurs. Employee exposures to MC are analyzed on the basis of ''application groups,'' i.e., groups of firms that use MC to perform a particular function, such as metal cleaning or industrial paint stripping, regardless of the particular industry in which the use takes place. The methodology used by OSHA in the analysis is appropriate when a ubiquitous chemical like MC is used to perform the same function in many kinds of firms in many industries, because the processes used, employee exposures generated, and controls in place or needed to achieve compliance are the same, whether the process takes place in a machine shop, on board ship, or on a construction site. For example, because the process of using MC to strip paint or coatings from an object is essentially the same whether the object being stripped is a spray paint booth, boat, church pew, or automobile, and the exposures generated during the process are similar in important respects, it is appropriate to analyze such activities as a group. However, OSHA's technological feasibility and cost analyses reflect the fact that job classifications and work processes may differ within a given application group. Table VIII–1 shows the application groups analyzed in the economic analysis, and the numbers of MC-using establishments, MC-exposed workers, and estimated volume of MC handled annually by establishments in each application group.

TABLE VIII–1.—METHYLENE CHLORIDE APPLICATION GROUPS

Application group	Estimated number of MC-using establishments *	Estimated total employment *	Estimated number of exposed workers *	Estimated MC handled (millions of lbs)
Methylene Chloride Manufacturing	4	1,664	84	469.20
Distribution/Formulation of Solvents	320	84,004	1,701	189.65
Metal Cleaning:				
Cold Degreasing and Other Cold Cleaning:	23,717	901,232	94,537	32.56
Open-Top Vapor Degreasing	278	27,105	608	14.87
Conveyorized Vapor Degreasing	45	2,920	75	1.13
Semiconductors	239	217,960	1,392	0.40
Printed Circuit Boards	141	77,795	298	13.98
Aerosol Packaging	52	4,142	520	25.21
Paint Remover Manufacturing	80	6,134	200	136.85
Paint Manufacturing	49	8,909	229	3.54
Paint Stripping:				
Aircraft Stripping	300	266,826	2,470	13.17
Furniture Stripping	6,152	23,592	7,872	23.26
Other Industrial Paint Stripping	35,041	2,312,721	46,605	59.36
Flexible Polyurethane Foam Manufacturing	100	9,800	600	50.32
Plastics and Adhesives Manufacturing and Use	3,487	1,186,040	10,481	41.90
Adhesive Production	165	56,254	497	.....
Adhesive Use	1,753	596,291	5,269	.....
Injection Molding	80	27,211	240	.....

TABLE VIII–1.—METHYLENE CHLORIDE APPLICATION GROUPS—Continued

Application group	Estimated number of MC-using establishments *	Estimated total employment *	Estimated number of exposed workers *	Estimated MC handled (millions of lbs)
Lamination	1,323	450,031	4,070	.....
Mold Release	165	56,254	497	.....
Ink Use:				
Ink and Ink Solvent Manufacturing	15	2,010	58	3.68
Ink Solvent Use in Printing	11,869	197,619	39,481	3.68
Pesticide Manufacturing and Formulation	60	1,440	120	9.58
Pharmaceutical Manufacturing	108	70,223	1,431	39.53
Solvent Recovery	34	932	137	32.10
Film Base Manufacturing	1	45,000	500	8.90
Polycarbonate Manufacturing	4	1,898	67	6.70
Construction	9,504	63,115	24,896	2.44
Shipyards	25	85,212	3,040	0.47
Total, all application groups	91,624	5,598,293	237,496	**

* In most cases, the estimated number of establishments in each application group was based on the volume flow of MC in 1990 divided by the estimated MC use per facility. The estimated number of establishments was multiplied by the total number of employees per establishment and exposed employees per establishment as reported in CONSAD's survey.

** Netting out rehandling, estimated total consumption equals 469.2 million pounds manufactured, minus 129.1 million pounds exported, + 19.3 million pounds imported, + 32.10 million pounds recovered from used solvent. The column does not sum to 391.5 million pounds because non-consumptive uses such as production, distribution and formulation, and solvent recovery are included.

Sources: CONSAD, HSIA, PRMA, Office of Regulatory Analysis.

In all, OSHA analyzed 28 application groups. These application groups include, among others, methylene chloride manufacturing, paint manufacturing, metal cleaning, polyurethane foam manufacturing, plastics and adhesives manufacturing, ink use, pharmaceuticals, and construction and shipyards. A total of 91,624 establishments are estimated to be potentially affected by the standard. These establishments employ a total of 5.6 million employees, of whom 237,496 are estimated to be exposed to MC in the course of their work. The application groups with the largest numbers of directly exposed employees are the Metal Cleaning, All Other Industrial Paint Stripping, and Ink Solvent Use groups. In many facilities, MC is used only by a small number of employees; the average number of MC-exposed employees per establishment covered by the final rule is only 2.6 employees.

Chapter III of the analysis assesses the technological feasibility of the final standard's requirements, and particularly its PELs, for firms in the 28 application groups identified in the Industry Profile. OSHA finds, based on an analysis of exposure data taken on workers performing the MC-related tasks identified for each application group, that compliance with the standard is technologically feasible for establishments in every application group studied. With few exceptions, employers will be able to achieve compliance with both PELs through the use of engineering controls and work practices. The few exceptions are certain maintenance activities, such as vessel cleaning, which have traditionally involved the use of respiratory protection, and operations in two applications where the supplemental use of respirators may be necessary. These operations are centrifuge unloading and dryer loading at one bulk pharmaceutical manufacturing facility operated by Abbott Laboratories, and operations involving access to and entering of the roll coating machine used by the Eastman Kodak Company to make film base.

The exposure data relied on by OSHA in making its technological feasibility determinations have been compiled in a database that contains thousands of MC exposure results (see Appendix B of this analysis) taken by OSHA compliance officers, consultation program consultants, MC-using companies, and interested parties. These data show that many facilities in many of the affected application groups have already achieved the reductions in employee exposures required by the final rule. In addition, the exposures of many employees in many job categories in a number of the application groups have been reduced to levels that are close to those required by the standard. OSHA's analysis of technological feasibility analyzes employee exposures at the operation or task level to the extent that such data are available. In other words, the analysis identifies relevant exposure data on a job-category-by-job category basis to permit the Agency to pinpoint those MC-exposed workers and job operations that are not yet under good process control and will thus need additional controls (including improved housekeeping, maintenance procedures, and employee work practices) to achieve compliance. Costs are then developed (see Chapter V of the economic analysis) for the improved controls needed to reach the new levels.

The benefits that will accrue to MC-exposed employees and their employers are substantial and take a number of forms. Chapter IV of the analysis describes these benefits, both in quantitative and qualitative form. First, based on a physiologically-based pharmacokinetic (PBPK) model, OSHA estimated that, if all 237,000 employees were exposed at the existing 8-hour TWA exposure limit of 500 ppm for an occupational lifetime of 45 years, a total of 29,862 excess cancer deaths would occur, or 126 excess cancer deaths per 1,000 workers. If, however, the 237,000 employees were exposed to the final standard's PEL of 25 ppm for 45 years, 8533 excess cancer deaths would be expected (3.6 per thousand workers). However, few workers are currently being exposed to 500 ppm of MC as an 8-hour TWA. The actual exposure levels of most affected workers are considerably lower, and, when these exposure levels, rather than 500 ppm, are used as the baseline, the PBPK model estimates that 1405 cancer deaths will be averted over a 45-year period. By reducing the total number of MC-related cancer deaths from 1,804 deaths to 399 deaths over 45 years, the standard will

save an average of 31 cancer deaths per year. Table VIII–2 shows these risk estimates.

TABLE VIII–2.—LUNG CANCER RISK OVER 45 YEARS FOR WORKERS EXPOSED AT CURRENT EXPOSURE LEVELS AND AT THE LEVELS EXPECTED AFTER IMPLEMENTATION OF THE FINAL STANDARD

	0–12.5	12.5–25	25	25–50	50–100	100–200	200–350	350–500	500+***	Total
Lifetime Excess Cancer Risk (per thousand workers)*	0.91	2.71	3.60	5.53	11.98	28.45	61.75	104.44	125.78	.....
Baseline Number of Workers Exposed	141,323	26,464	162	22,839	23,903	14,803	3,281	1,297	3,422	237,495
Estimated Excess Deaths in Baseline (Existing PEL)**	129	72	1	126	286	421	203	135	430	1,804
Predicted Number of Workers Exposed at New PEL	159,825	28,441	49,229	0	0	0	0	0	0	237,495
Predicted Excess Deaths at New PEL**	146	77	176	0	0	0	0	0	0	399

*Based on OSHA's final estimate using the PBPK model, as presented in the Quantitative Risk Assessment section of the Preamble.
**Computed as level of lifetime risk times the number of exposed workers.
***For workers exposed to levels of greater than the current PEL of 500 ppm, the risk estimate is that associated with a lifetime exposure to 500 ppm.
Source: Office of Regulatory Analysis; OSHA; Department of Labor.

In addition to cancer deaths, the standard is estimated to prevent 3 deaths per year from MC's acute central nervous system and carboxyhemoglobinemic effects. (Carboxy-hemoglobinemia is the inability of the blood to carry sufficient oxygen to supply the heart muscle; because methylene chloride interferes with the blood's ability to carry oxygen, exposure to it places susceptible individuals, such as those with silent cardiovascular disease, pregnant women, and smokers, at greater risk.) OSHA receives reports every year of workers who have succumbed to MC's acute CNS toxicity while they were engaged in such tasks as floor stripping. For example, the Agency recently received a fatality report on two young workers who died after pouring 14 gallons of MC on a squash court they were refinishing. Both of these employees lost consciousness, collapsed, and subsequently died of respiratory failure. In addition, MC exposures above the level at which the final rule's STEL is set—125 ppm—are also associated with acute central nervous system effects, such as dizziness, staggered gait, and diminished alertness, all effects that can lead to workplace accidents. OSHA estimates that as many as 30,000 to 54,000 workers will be protected by the final rule's STEL from experiencing CNS effects and episodes of carboxyhemoglobinemia every year. Moreover, exposure to the liquid or vapor forms of MC can lead to eye, skin, and mucous membrane irritation, and these material impairments will also be averted by compliance with the final rule. Finally, contact of the skin with MC can lead to percutaneous absorption and systemic toxicity and thus lead to additional cases of cancer that have not been taken into account in the benefits assessment presented in Chapter IV of the Final Economic Analysis.

The costs employers in the affected application groups are estimated to incur to comply with the standard total $101 million in 1994 dollars. These costs, which are presented in Chapter V of the full economic analysis, are annualized over a 10-year horizon at a discount rate of 7 percent. Table VIII–3 shows annualized costs by provision of the standard; the most costly

provisions are those requiring engineering controls, protective clothing and eye protection, and medical surveillance for MC-exposed workers. These three provisions together account for approximately 75 percent of the standard's compliance costs.

TABLE VIII–3.—ANNUALIZED COSTS BY PROVISION

Provision	Annualized Costs
Engineering Controls	$38,773,642
Respirators	6,374,083
Monitoring	9,849,577
Protective Clothing and Eye Protection	29,578,340
Emergency Eyewash and Shower	3,183,486
Medical Surveillance	7,986,493
Leak and Spill Detection Program	3,703,286
Regulated Areas	150,884
Recordkeeping	652,121
Training	196,656
Understanding Regulation and Developing Training	777,132
Subtotal	101,225,701
Costs of Substitution	237,336
Total	101,463,037

Source: Office of Regulatory Analysis; OSHA; Department of Labor.

Table VIII–4 analyzes compliance costs by application group and shows that the Cold Cleaning application group, which is in the larger Metal Cleaning grouping, and the Furniture Stripping application group, which is in the larger Paint Stripping category, will incur the largest costs of compliance (though not necessarily the largest economic impacts). These costs reflect the high exposures and relative lack of control measures currently existing in many establishments in these two application groups. In other words, because MC exposures are poorly controlled in so many cold cleaning and furniture stripping facilities, employers in these industries will be required by the standard to implement control measures to protect their employees from the significant risk of MC exposure.

TABLE VIII–4.—ANNUALIZED COSTS BY METHYLENE CHLORIDE APPLICATION GROUPS

Application group	Annualized costs
Methylene Chloride Manufacturing	8,150
Distribution/Formulation of Solvents	794,099
Metal Cleaning:	
Cold Degreasing and Other Cold Cleaning	26,950,869
Open-Top Vapor Degreasing	371,096
Conveyorized Vapor Degreasing	97,253
Semiconductors	247,666
Printed Circuit Boards	217,479
Aerosol Packaging	297,999
Paint Remover Manufacturing	229,724
Paint Manufacturing	89,697
Paint Stripping:	
Aircraft Stripping	8,148,754
Furniture Stripping	10,689,840
All Other Industrial Paint Stripping	24,413,924
Flexible Polyurethane Foam Manufacturing	4,252,861
Plastics and Adhesives Manufacturing and use	5,417,950
Adhesive Production	
Adhesive Use	
Injection Molding	
Lamination	
Mold Release	
Ink and Ink Solvent Manufacturing	23,518

TABLE VIII–4.—ANNUALIZED COSTS BY METHYLENE CHLORIDE APPLICATION GROUPS—Continued

Application group	Annualized costs
Ink Solvent Use	3,360,723
Pesticide Manufacturing and Formulation	106,060
Pharmaceutical Manufacturing	311,708
Solvent Recovery	49,829
Film Base Manufacturing	47,454
Polycarbonate Manufacturing	4,651
Construction	14,922,000
Shipyards	518,544
Total, all application groups	101,463,037

Source: Office of Regulatory Analysis; OSHA; Department of Labor.

Chapter VI of the economic analysis analyzes the impacts of compliance costs on firms in affected application groups. The standard is clearly economically feasible: on average, annualized compliance costs amount only to 0.18 percent of estimated sales and 3.79 percent of profits. For all but three application groups—polyurethane foam blowing, furniture stripping, and construction—compliance costs are less than 3 percent of profits, and for all but one application group—furniture stripping—annualized compliance costs are less than 0.5 percent of the value of sales. Table VIII–5 shows average compliance cost impacts across the many Standard Industrial Classification (SIC) codes potentially involved in the application groups studied.

TABLE VIII–5.—SCREENING ANALYSIS TO IDENTIFY POSSIBLE ECONOMIC IMPACT OF THE FINAL MC STANDARD

Application group	Number of establishments complying	Annualized costs of compliance	
		As percent of sales	As percent of profit
Manufacture of MC	4	(*)	0.04
Distribution/Formulation of Solvents	320	0.04	0.55
Metal Cleaning:			
Cold Degreasing and Other Cold Cleaning	23,717	0.01	0.18
Open-Top Vapor Degreasing	278	0.01	0.22
Conveyorized Vapor Degreasing	45	0.02	0.35
Semiconductors	239	(*)	0.05
Printed Circuit Boards	141	0.02	0.41
Aerosol Packaging	50	0.01	0.13
Paint Remover Manufacturing	80	0.02	0.06
Paint Manufacturing	49	0.01	0.04
Paint Remover Use (Paint Stripping):			
Aircraft Stripping (Large Firms)	75	0.07	1.34
Aircraft Stripping (Small Firms)	225	0.08	2.12
Furniture Stripping	6,152	2.04	**39.40

TABLE VIII–5.—SCREENING ANALYSIS TO IDENTIFY POSSIBLE ECONOMIC IMPACT OF THE FINAL MC STANDARD—Continued

Application group	Number of establishments complying	Annualized costs of compliance	
		As percent of sales	As percent of profit
All Other Industrial Paint Stripping	35,041	0.01	0.11
Flexible Polyurethane Foam Manufacturing	100	0.32	**9.23
Plastics and Adhesives Manufacturing and Use	3,487	0.03	0.52
Ink and Ink Solvent Manufacturing	15	(*)	0.03
Ink Solvent Use	11,869	0.03	0.05
Pesticide Manufacturing and Formulation	60	0.01	0.35
Pharmaceutical Manufacturing	108	(*)	0.03
Solvent Recovery	37	0.05	0.85
Film Base	1	(*)	0.01
Polycarbonates	4	(*)	(*)
Construction	9,504	0.35	**9.67
Shipyards	25	0.07	1.72
All Application groups	91,625	0.18	3.79

* = less than .005%.

** These relatively high impacts on profits assume that no price increase is possible. In all three cases, price increases of 2.1 percent or less would fully restore profits. In all of these application groups, most firms will be able to increase prices to offset their regulatory costs. In furniture stripping, a substantial portion of the market is for antique refinishing that involves MC use, a service which is relatively price insenstive. Soft flexible foam of the kind MC is used to make is an essential material in the construction of cushions of all types. In the construction sector, MC based paint stripping and foam blowing are essential operations of many of the jobs in which they are used.

SOURCES: CONSAD; Dun & Bradstreet; Office of Regulatory Analysis, OSHA, Department of Labor.

It is important to understand that OSHA's methodology tends to overestimate the economic impacts of the standard, for a number of reasons. For example, OSHA's cost methodology does not take into account the many simple and virtually cost-less improvements in employee work practices and housekeeping procedures that would enable many employers to achieve compliance with the final rule's PELs. In flexible polyurethane foam manufacturing, for example, OSHA's costs may be overestimated because it was assumed that no firms would substitute away from MC entirely, even though some firms have already done so (as described in Chapter III, Technological Feasibility). Despite the fact that OSHA's cost estimates are likely to be overestimates, OSHA decided to examine in greater detail the three application groups shown by the economic analysis to have the highest costs as a percentage of profits, i.e., furniture stripping, polyurethane foam manufacturing, and construction.

In the furniture refinishing application group, compliance costs are 2.0 percent of the value of revenues and 39 percent of the value of before-tax profits. Approximately half of all furniture refinishing sales derive from antique refinishing, a market niche that is unlikely to be sensitive to a 2.0 percent change in price. Even in the area of used furniture refinishing, which constitutes the remaining half of the furniture refinishing market, a 2.0 percent price increase would be unlikely to significantly alter the amount of furniture being refinished. In general, price increases of this magnitude would be expected to result only in a very small drop in the demand for furniture refinishing. If this were not the case, normal business fluctuations, such as drops in the relative cost of new furniture or a major increase in the price of methylene chloride (such as has occurred in recent years) would also have had major impacts on the industry.

In construction and polyurethane foam manufacturing, compliance costs for the average firm are 9.2 and 9.7 percent of profits, respectively. However, to offset these costs, construction firms would need only to increase their revenues by 0.35 percent and foam blowing operations would need only to increase the price of their products by 0.32 percent. In construction, such price increases are unlikely to present a problem, since the use of MC is essential on many larger construction projects. For example, it is difficult to believe that demand for remodeling or renovation projects would be seriously altered by a 0.35 percent increase in the cost of the paint stripping portion of the job. In flexible polyurethane foam manufacturing, either MC or an appropriate substitute is essential to the production of low density, or soft, foam, and foam, in turn, is essential to the production of many kinds of furniture. Demand for such products is unlikely to change as a result of an 0.32 percent increase in the price of flexible foam. OSHA therefore concludes that even marginal firms in these three sectors—furniture stripping, construction, and flexible foam blowing— are unlikely to close as a result of the compliance costs of this standard.

To ensure that the analysis of average impacts presented in the economic analysis did not obscure potentially significant economic impacts at the 4-digit SIC level, OSHA performed an in-depth analysis of the 4-digit SICs potentially involved in the Cold Cleaning and All Other Industrial Paint Stripping application groups. The results of this in-depth analysis are presented in Appendix D of the full economic analysis. In all, a total of 162 4-digit SICs potentially impacted by the standard in the Cold Cleaning group and more than 200 4-digit SICs in the Other Industrial Paint Stripping group were analyzed. Across all of the Cold Cleaning SICs, the average impact of the costs of compliance is 0.06 percent of revenues and 1.12 percent of profits. The largest impacts on profits occur in SIC 3412, Metal Barrels, Drums, and Pails, and SIC 3494, Valves and Pipe Fittings not elsewhere classified; in these cases, impacts on profits are 13.3 and 15.1 percent, respectively. In both of these cases, however, these impacts are explained by extremely low profit margins (less than .02 percent of sales, i.e., less than $2 per $10,000 in sales, in 1994). As a result, a price increase of less than one cent per $100 of revenue would leave profits unchanged. Such a price increase is feasible because an

increase of this magnitude is unlikely to lead to significant changes in the demand for metal barrels or valves and pipe fittings. In no other 4-digit Cold Cleaning SIC did impacts reach even 5 percent of profits.

Across all 200-plus Industrial Paint Stripping SICs, the average impact of the costs of compliance on revenues is 0.03 percent. The largest impact of costs on sales is 0.33 percent and occurs in SIC 7532, Auto Top, Body Repair, and Paint Shops (discussed further below). The average impacts of costs on profits across these SICs is 0.17 percent. The largest impacts on profits occur in SIC 3412, SIC 3494 (both discussed above), and in SIC 7532, Auto Tops, Body Repair and Paint Shops; in all three of these SICs, cost impacts are between 6 and 8 percent of profits. Again, the explanation for these impacts in SICs 3412 and 3494 is that their profit margin in 1994 was vanishingly low. The resulting price increases required to maintain profits are also extremely small, and OSHA concludes that such an increase is likely to take place in these cases. In SIC 7532, the other relatively high impact SIC, profit margins are relatively high (approximately 4.4 percent), and thus a small decline of this magnitude would have relatively little impact.

Summary of the Regulatory Flexibility Analysis

In its 1991 proposal, OSHA requested comments and information that would assist the Agency in identifying small-business users of MC and in structuring the final standard so that these users would be able to achieve the standard's worker protection goals in ways that would be technologically and economically feasible for them (56 FR 57041 to 57043). OSHA anticipated that, as stated in the proposal, the standard might have a significant economic impact on small entities in at least two application groups: firms with fewer than 20 employees that engage in stripping of paint from aircraft, and firms with fewer than 20 employees that engage in furniture stripping.[3] OSHA also requested comment concerning the standard's impact on small employers in light of the Regulatory Flexibility Act's mandate to consider and minimize impacts on small businesses, consistent with the purposes and criteria of the standard's enabling legislation (56 FR 57115 to 57121).

Many commenters identified additional application groups that include small establishments likely to have difficulty achieving all of the standard's protective goals if the requirements of the standard were structured in a one-size-fits-all manner. These commenters provided considerable data and identified many possible modifications and alternatives to the proposed standard that they believed would facilitate compliance and mitigate the standard's impact on MC-using establishments with fewer than 20 employees.

None of the comments concerning small employer issues, whether in the context of economic or technological feasibility or the Regulatory Flexibility Act, disagreed with OSHA's basic premise that the fewer-than-20-employee cut-off was appropriate to distinguish between large and small MC-using businesses, was a useful way of characterizing the compliance abilities and limitations of affected employers and is an appropriate definition for purposes of the Regulatory Flexibility Act. Use of this numerical cut-off point captures 61 percent of all establishments potentially affected by the final rule. MC-users with fewer than 20 workers tend to have the characteristics of ''mom-and-pop'' businesses, whereas establishments with 20 or more workers are generally more sophisticated in terms of the technology they use and their management resources. The 20-employee threshold has also proved to be an agreed-on and useful cut-off point in past OSHA rulemakings (see, for example, the permit-required confined spaces standard (58 FR 4547) and the process safety management standard (57 FR 6402)).

During Executive Order 12866 review, the Office of Advocacy of the Small Business Administration expressed its views concerning OSHA's small business definition. In a letter to OMB, the SBA's Chief Counsel for Advocacy stated in a letter dated August 16, 1996, that ''[t]he regulatory alternatives developed, using OSHA's size standard of less than 20 employees, were somewhat beneficial to two of the three industries [furniture stripping, polyurethane foam blowing, and construction]. These industries, i.e., furniture stripping and construction, are predominantly micro businesses that fall into OSHA's definition of small'' (Ex. 130). The Office of Advocacy was concerned, however, that the 20-employee cut-off did not adequately deal with the MC-using polyurethane foam manufacturing sector. (In this application group, the majority of establishments likely to experience significant economic impacts fall into the 20 to 99- employee size category.) ''[T]he characteristics of the manufacturing sector indicate that the [20 employee] size standard was not appropriate in that industry for the purposes of regulatory flexibility.'' *Id*. The SBA concluded that OSHA should consider taking additional steps to address implementation burdens and the needs of the polyurethane foam manufacturing sector.

Working with OMB and the SBA's Office of Advocacy to resolve this concern, OSHA reexamined the potential impacts of the standard on polyurethane foam manufacturing establishments in the 20 to 99 employee size category in the context of economic impact issues. As explained more fully in the Final Economic and Regulatory Flexibility Analysis, OSHA concluded that, even though members of this group were not small employers, some accommodation would be necessary to assure that employees working in establishments of this size in this industry would not receive less protection than all other MC-exposed employees. Accordingly, OSHA extended the engineering control implementation date for this group of establishments by one year. This extended phase-in is designed to enable this group of employers to plan for and accumulate the capital to finance needed controls, install them, and ensure their effective and consistent operation before the compliance deadline.

OSHA's extensive feasibility studies and focus on small business issues resulted in a number of modifications that have made the standard more cost-effective for business while maintaining protection for workers. In addition, OSHA conducted an alternative screening analysis to measure the final rule's potential impacts on establishments in the regulated community using the SBA's size standards. For most application groups, this meant that OSHA examined the standard's economic impacts on firms at the 500 employee level. (Financial data are not available for cut-off points higher than 500 employees; thus, OSHA used that cut-off for all application groups.) In some cases, the SBA size standards are defined in terms of annual revenues, and for SICs so defined, OSHA translated these revenue figures into the appropriate employee size category. This SBA-based alternative screening analysis enabled the Agency to determine whether, by failing to look

[3] As a result of data and information received from commenters and other information in the record, the Final Economic Analysis does not identify significant impacts or technologic or economic feasibility problems for aircraft stripping operations of any size.

at potential impacts among firms in other size classes, significant impacts had been overlooked. The analysis conducted using the SBA size standards confirmed that any potentially significant economic impacts associated with the final rule occur among firms in the fewer-than-20-employee category, with one exception, i.e., firms in the 20–99 employee size category in the polyurethane foam manufacturing industry. (See the full Final Economic Analysis for additional detail.)

For the final rule, OSHA has analyzed the costs of compliance as a percentage of profits, and costs as a percentage of revenues, for firms with fewer than 20 employees in every application group. This analysis identified significant economic impacts on a substantial number of small entities, and the Agency has accordingly conducted a full Final Regulatory Flexibility Analysis in accordance with the Regulatory Flexibility Act, as amended in 1996. The three application groups for which such impacts were identified were Furniture Stripping, Polyurethane Foam Blowing, and Construction. Table VIII–6 shows the results of this analysis in detail.

The full regulatory flexibility analysis is presented in Chapter VI of the Final Economic and Regulatory Flexibility Analysis. The remainder of this section briefly summarizes that analysis.

This rule is needed to prevent cancer deaths and other illnesses, as discussed in greater detail in the Health Effects Section (Section V of this Preamble). Section III of this preamble, Events Leading to the Final Standard, summarizes OSHA's efforts to assure input to this rulemaking by affected small firms. Table VIII–6 identifies the affected small firms by sector. OSHA estimates that a total of 56,000 small firms will be affected by this standard.

TABLE VIII–6.—SCEENING ANALYSIS OF POTENTIAL ECONOMIC IMPACTS ON SMALL FIRMS

Application group	Number of small establishments affected	Costs as a percentage of profits for small firms	Costs as a percentage of sales for small firms
Manufacture of MC	0	NA	NA
Distribution/Formulation of Solvents	139	3.0%	0.2
Metal Cleaning:			
Cold Degreasing and Other Cold Cleaning	9,223	0.9	0.0
Open-Top Vapor Degreasing	0	NA	NA
Conveyorized Vapor Degreasing	11	2.4	0.1
Semiconductors	0	NA	NA
Printed Circuit Boards	20	2.0	0.1
Aerosol Packaging	10	0.7	0.1
Paint Remover Manufacturing	34	0.3	0.1
Paint Manufacturing	7	0.1	0.0
Paint Remover Use (Paint Stripping):			
Aircraft Stripping (Large Firms)	0	NA	NA
Aircraft Stripping (Small Firms)	75	4.5	0.1
Furniture Stripping	5,901	41.5*	2.2
All Other Industrial Paint Stripping	25,441	0.8	0.0
Flexible Polyurethane Foam Manufacturing	8	60.3*	1.7
Plastics and Adhesives Manufacturing and Use	498	1.8	0.1
Ink and Ink Solvent Manufacturing	3	NA	NA
Ink Solvent Use	5,395	0.1	0.1
Pesticide Manufacturing and Formulation	40	6.6	0.2
Pharmaceutical Manufacturing	0	NA	NA
Solvent Recovery	17	2.7	0.1
Film Base	0	NA	NA
Polycarbonates	0	NA	NA
Construction	9,085	19.9*	0.5
Shipyards	0	NA	NA
All Application groups	55,908	8.2	0.3

NA=No small firms in this application group.

*These relatively high impacts on profits assume that no price increase is possible. In all three cases, price increases of 2.1 percent or less would fully restore profits. In all of these application groups, most firms will be able to increase prices to offset their regulatory costs. In furniture stripping, a susbtantial portion of the market is for antique refinishing that involves MC use, a service which is relatively price insensitive. Soft flexible foam of the kind MC is used to make is an essential material in the construction of cushions of all types. In the construction sector, MC based paint stripping and foam blowing are essential operations of many of the jobs in which they are used.

Sources: CONSAD; Dun & Bradstreet; Office of Regulatory Analysis, OSHA, Department of Labor.

The Summary and Explanation section of this preamble provides a description of the compliance requirements associated with this rule, and a paperwork burden analysis of the record keeping requirements is provided in the Collection of Information Request for Comment section at the beginning of this preamble. Based on comments regarding anticipated effects on small businesses, OSHA has reduced the final rule's overall paperwork requirements from those proposed and has refined some paperwork requirements to simplify compliance for small entities.

OSHA considered numerous regulatory alternatives and modifications to the requirements of the proposed standard (ranging from higher PELs, to 40-hour rather than 8-hour time weighted average exposure limits, to delayed implementation dates) that commenters believed might minimize significant economic impacts on small businesses. OSHA rejected those alternatives that clearly decreased the safety of workers in small establishments, but the Agency also adopted many regulatory changes that will improve small employers' ability to provide their employees with the same level of protection as that afforded workers in larger establishments. As

explained more fully in the Final Economic Analysis and summarized in Table VIII–7, the final standard contains delayed implementation dates, reduced paperwork requirements, streamlined medical surveillance provisions and other accommodations that, in the Agency's judgment, will minimize any significant economic impacts of the standard on small employers to the extent necessary to enable them to meet the standard's protective goals.

TABLE VIII–7. CHANGES MADE SINCE THE PROPOSED REGULATION TO REDUCE THE FINAL STANDARD'S IMPACTS ON SMALL BUSINESSES

Change to proposed regulation	Impact on small businesses
Firms with fewer than 20 employees given 3 years (rather than 1) to achieve PEL using engineering controls.	More performance oriented and flexible, reduces costs to small businesses in first two years by 30 to 40 %, allows small businesses time to plan major expenditures.
Allows the use of licensed health care professionals in addition to physicians for medical surveillance.	Provides greater flexibility.
Laboratory tests are at the discretion of physician rather than automatically required.	Reduces costs of medical surveillance by more than 14 percent, more performance oriented.
Employees under 45 are required to have a physical every three years rather than annually.	Reduces costs of medical surveillance by 30 percent.
Respirators required in regulated areas only when PEL is likely to be exceeded.	Decreases respirator use and costs for small business.
If MC is used less than 30 days per year, monitoring may be conducted with direct reading instruments.	Significantly reduces costs of monitoring for establishments making limited use of MC; this provision will be especially helpful in construction.
Written compliance plans are no longer required	Reduces paperwork.
Hazard communication requirements do not go beyond what is already required by hazard communication standard.	Reduces paperwork and costs.
Employee re-training only as needed rather than annually	More performance oriented, reduces costs of training 80 percent.
Simplified recordkeeping for small businesses for exposure monitoring data.	Reduces paperwork.

IX. Environmental Impact

This section analyzes the impact on the environment of changing the standard for methylene chloride (MC) to an eight-hour time weighted average (TWA8) permissible exposure limit (PEL) of 25 parts per million (ppm), with a 125 ppm 15-minute short-term exposure limit (STEL) and ancillary requirements. It is based principally on information collected for OSHA by CONSAD Research Corporation and its subcontractor, PEI Associates Inc., and reported in *Economic Analysis of Draft Regulatory Standard for Methylene Chloride,* 1990, OSHA Docket, Ex. 15, and also draws upon other materials in the OSHA docket.

Current uses of methylene chloride involve releases to the air through venting of storage tanks or drums and through evaporation of MC during the performance of various activities such as paint stripping and cold cleaning indoors or outdoors. The volume of MC emitted as a percentage of MC used varies greatly among industries. Some processes, such as polyurethane foam manufacturing and paint stripping, typically release 100 percent of the MC to the atmosphere (Ex. 15). Other uses, such as solvent recovery and the manufacture of methylene chloride, involve less than 1 percent of the MC used being emitted to the atmosphere (Ex. 15). In addition, air, water, or solid waste pollution may occur as a result of the disposal of waste residues containing MC. Additional details by application group are presented in CONSAD's report [Ex. 15].

Future environmental releases of methylene chloride resulting from the final standard will largely be a function of how it affects the demand for methylene chloride and for its substitutes. The demand for methylene chloride has been declining (e.g., generally, it is no longer being used in formulating hairsprays). Any regulatory action by OSHA is expected to further reduce the demand for MC and thus the extent of its environmental releases.

Although it is technically possible to substitute chlorofluorocarbons (CFCs) for methylene chloride in electronics and foam blowing, OSHA does not expect the revision of the MC standard to have any such effect. CFC products are significantly more expensive than MC products and are themselves being phased out or banned because of their effects on the environment.

To the extent that firms might have to use greater quantities of substitute chemicals to get the same effects formerly obtained with MC, waste residues and disposal costs would increase. On the other hand, increases in MC leak prevention and recycling would improve the environment.

The Paint Remover Manufacturers Association (PRMA) has charged that the standard would cause ''massive amounts'' of methylene chloride to be emitted into the atmosphere (Ex. 19–11). In Chapter III, OSHA noted that it could find no convincing argument by PRMA as to why the total amount emitted after installation of exhaust ventilation would differ significantly from the amount now simply leaking into the atmosphere.

At informal public hearings, PRMA stated that ''an exposure level of 25 PPM is so low that it brings into the issue the formation of vapor clouds with levels of greater than 25 PPM that could move in and around the neighborhood,'' allegedly through decomposition of the MC [Tr. 245, 9/17/92]. There is no evidence that this hypothetical situation has ever occurred. PRMA may have confused decomposition with diffusion [Tr. 940–941, 9/21/92]. At Eastman Kodak Company, which currently emits more methylene chloride into the atmosphere than any furniture stripper possibly could, the chemical has diffused so rapidly that no clouds of MC have been formed [Tr. 1237–1238, 9/22/92].

Generally, it is not expected that any significant environmental impact will result from revision of the methylene chloride standard.

X. Summary and Explanation of the Final Standard

Introduction

The final standard for occupational exposure to methylene chloride (MC) is different in several important respects from the proposed MC standard

published in the Federal Register in 1991 (56 FR 57036). For example, the standard has been written in plain language, is more performance-oriented than the proposal, and substantially reduces the amount of paperwork employers will have to complete. Employers will thus find compliance with the standard easier, their paperwork less extensive, and their obligations clearer and less burdensome. These changes are discussed in greater detail in the appropriate sections of this Summary and Explanation. OSHA seeks input from users of the standard on whether these changes are helpful and what other changes could be made to future standards to increase their user-friendliness. OSHA will also be conducting a number of compliance assistance and outreach projects in connection with this standard to assist employers and employees to comply.

As part of the Agency's new approach to standards writing, OSHA has included an introductory paragraph in the standard to provide readers with information on MC, its health effects and principal uses, and the reasons OSHA is regulating this toxic substance. This introductory language is non-mandatory and is intended only to provide information and enhance compliance.

This final rule is an occupational health standard that establishes requirements to control employee exposure to MC, a chemical compound found in many different types of industries. OSHA has determined that this standard is necessary because exposure to MC places employees at significant risk of developing exposure-related adverse health effects. These effects include cancer, effects on the heart and central nervous system, and skin and eye irritation. Employee exposure to MC can occur through inhalation or through skin absorption or contact with the skin. This substance is frequently used as a solvent in many different kinds of jobs, including furniture stripping, foam blowing, film manufacturing and metal degreasing.

Although the final rule covers many different types of workplaces where MC is used, the extent of coverage depends on the magnitude of employee exposure. Although all covered employers, i.e., those with MC in the workplace, must determine initially the extent to which their employees are exposed to MC, those with exposures at or below the action level will only have to document the results of this initial determination, provide employee information and training, and provide means of protecting employees from contact with liquid MC. The standard's other requirements, such as those for engineering controls, medical surveillance, etc. apply only to workplaces where employee exposures to MC exceed the action level.

Paragraph (a) Scope and application

This standard applies to all occupational exposures in workplaces covered by OSHA in general industry, construction and shipyards where MC is produced, released, stored, handled, or used.

As discussed in the Health Effects and Significance of Risk sections of this preamble, OSHA has determined that exposure to MC at the former PEL creates a significant risk that employees' health will be materially impaired. Possible adverse health effects include cancer, cardiac effects, central nervous system effects, and skin or eye irritation. Exposures to MC are found in various general industry, construction, and shipyard facilities, and OSHA has determined that there are feasible measures to control them in each of these types of employment.

In the proposal's Authority section, OSHA preliminarily determined, under Section 4(b)(2) of the OSH Act, that it would be appropriate for the MC standard to supersede any corresponding longshoring standards in § 1910.16 and 29 CFR part 1918. The Agency therefore proposed to add a new paragraph (m) to § 1910.19. In addition, in questions raised by the Agency in its Notice of Public Hearing, OSHA requested input regarding the use of MC in longshoring. However, OSHA has subsequently proposed (59 FR 28594, June 2, 1994) to revise its marine terminal (part 1917) and longshoring (part 1918) standards. Those proposed standards (proposed §§ 1910.16(b)(2), 1917.1(b)(2)(xiv), and 1918.1(b)(1)) would apply OSHA's toxic substance standards (part 1910, subpart Z) only when the packaging in which a substance is being transported in the maritime environment has broken open. This language, based on the existing marine terminal standard (§ 1910.16(b)(2)(ii)), reflects the view that hazardous substances, when properly packaged, do not pose significant exposure risks for the shipyard employees transporting them in closed packages.

Therefore, as revised, final rule §1910.19(m) states that §1910.1052 will address MC exposure in marine terminal and longshore employment only where leaking or broken packages allow MC exposure that is not addressed through compliance with 29 CFR parts 1917 and 1918. Given the promulgation of § 1910.19(m), the Agency has determined that it is unnecessary to mention marine terminals and longshoring in final rule § 1910.1052(a), *Scope and application*.

OSHA has not learned of any circumstances in which marine terminal or longshore employees have been exposed to MC because of damage to packaging. The Agency, accordingly, anticipates that the MC final rule will have little or no impact on the marine terminal and longshoring industries.

In developing this rule, OSHA has consulted with its Shipyard Employment Standards Advisory Committee (SESAC) to obtain information on MC use and exposure in shipyards and has taken the Committee's input into consideration in developing the standard. In particular, OSHA has relied on data provided by SESAC in assessing the technological feasibility and costs of compliance of the standard for shipyards covered by the rule.

Since the construction industry is also included in the scope of the final rule, OSHA is required to consult the Advisory Committee on Construction Safety and Health (ACCSH) in accordance with section 107 of the Contract Work Hours and Safety Standards Act (40 U.S.C. 333) (the Construction Safety Act) and 29 CFR 1911.10. On July 28, 1992, OSHA formally consulted with ACCSH regarding the construction-specific aspects of occupational exposure to MC. The Agency solicited comment and testimony regarding ACCSH's recommendations through a Federal Register notice (57 FR 36964, August 17, 1992). One of ACCSH's suggestions was that the rule specifically require originators of contract bids to stipulate a requirement for compliance with the MC standard in their bids. OSHA has not adopted this suggestion in the final rule because construction contracts already require compliance with all relevant Federal regulations. The specific suggestions made by ACCSH and OSHA's responses to ACCSH's input are discussed below in the relevant paragraphs of the Summary and Explanation.

In the proposal, the scope and application paragraph included an exemption for employers with workplaces where MC products were present but objective data were available to demonstrate that the product could not release MC above the action level or STEL under those foreseeable conditions of processing, use, and handling that would cause the greatest possible release. This concept remains in the final standard, although the provision has been moved to the

exposure monitoring section (paragraph (d)), because this provision constitutes, in effect, an exception to the standard's requirement for initial monitoring.

The Air Transport Association [Ex. 19–75] requested that airlines be excluded from the general industry standard, and that a separate standard covering MC use in the airline industry be developed. OSHA has specifically determined that the exposures, work operations, and means of compliance for aircraft-related MC uses are similar to those in many other establishments and thus that there is no substantive basis for the requested exemption. Consequently, OSHA has concluded that no industry-specific standard for airlines is warranted. MC uses in the airline industry are discussed in the section of the final economic analysis entitled ''Aircraft Stripping.''

Paragraph (b) Definitions

This paragraph includes definitions of a number of terms used in the regulatory text of the final standard. Although some of these terms are in common use, OSHA believes that these definitions will help to ensure that their meaning in the context of the standard is clear.

Action level means an airborne concentration of MC of 12.5 ppm, measured as an 8-hour time-weighted average. One purpose of the action level is to relieve the burden on employers by providing a cut-off point below which many of the compliance activities in the standard are not required. In addition, due to the variable nature of employee exposures to airborne concentrations of MC, compliance with an action level provides employers with greater assurance that their employees will not be exposed to MC concentrations above the permissible exposure limits.

The action level also increases the cost-effectiveness and performance orientation of the standard while improving employee protection. The standard will encourage employers who can, in a cost-effective manner, identify approaches or innovative methodologies to reduce their employees' exposures to levels below the action level, because this will eliminate the costs associated with exposure monitoring and medical surveillance, two provisions of the standard that are triggered by exposure exceeding the action level. At the same time, the employees of such employers will be protected because their MC exposures will be less than half of those permitted by the permissible exposure limit. Employees of those employers who are not able to lower exposures below the action level will have the additional protection provided by medical surveillance, exposure monitoring, and the other provisions of the standard that are triggered by the action level.

The statistical basis for using an ''action level'' has been discussed in connection with several other OSHA health standards [see, for example, acrylonitrile (29 CFR 1910.1045) and ethylene oxide (29 CFR 1910.1047)]. In brief, although all employee exposure measurements on a given day may fall below the permissible exposure limit, some probability exists that on unmeasured days the employee's actual exposure may exceed the permissible exposure limit. Where exposure measurements are above the action level, the employer cannot reasonably be confident that the employee may not be overexposed on a given day. Therefore, requiring periodic employee exposure measurements to begin at the action level provides the employer with a reasonable degree of confidence in the results of his or her exposure measurement program [Ex. 7–248]. OSHA's decision to set the action level at one-half the PEL is based on its successful experience using this fraction as the action level in many standards, such as arsenic, ethylene oxide, vinyl chloride and benzene.

OSHA received comments from a number of rulemaking participants [Exs. 19–16, 19–20, 19–22, 19–31, 19–47, 19–75] suggesting that the proposed PELs and, by association, the action level, be revised. For instance, Hukill Chemical Corporation [Ex. 19–47] argued that the action level should be set at 100 ppm because it believes that: 1) CNS effects from MC are not observed in humans until 300 ppm; and 2) there is no evidence of excess cancer mortality in humans up to a level of 475 ppm. As explained in the Health Effects and Quantitative Risk Assessment sections of this preamble, OSHA disagrees with this commenter because the Agency has determined that significant risks exist at levels substantially below those referred to by the commenter and therefore that the suggested levels would not be adequately protective.

The Pharmaceutical Manufacturers Association (PMA) [Ex. 19–25] commented that the action level of 12.5 ppm is appropriate, but requested an exemption from ''various requirements of the standard'' if exposure occurs on fewer than 30 days a year. In particular, PMA suggested that periodic monitoring be required only when there is exposure above the PEL or STEL for at least 10 days a year or at or above the action level for at least 30 days a year. OSHA has considered this issue, along with similar concerns raised by ACCSH, and agreed that in cases where exposure occurs only on a few days per year, it was appropriate to alter the exposure monitoring requirements. Specifically, paragraph (d)(2)(iii) would permit employers whose employees are exposed to MC on fewer than 30 days per year to forego the initial monitoring required by paragraph (d)(2), provided that the employer has taken measurements that give immediate results (such as those taken by detector tube) and that provide sufficient information about exposures to determine what (if any) control measures are necessary. In addition, the medical surveillance requirement (paragraph (j)), with the exceptions described in the final rule, applies only where employees are exposed above the action level on at least 30 days within a year or above the PELs on at least 10 days within a year.

Newport News Shipbuilding [Ex. 19–37] suggested that the action level be set at 15 ppm. However, adopting this suggestion would not be consistent with the statistical basis for establishing the action level at one-half the PEL, as described above. In addition, Markey Restoration Company [Tr. 2671–72, 10/16/92] recommended that the action level be eliminated based on the costs of medical surveillance triggered by that level. As noted above, an action level is based on the probability of exceeding the PEL and is designed to enhance both employee protection and the standard's cost-effectiveness, and OSHA does not believe it would serve either employers or employees to eliminate this concept from the final rule.

The UAW [Tr. 1885–86, 9/24/92] questioned the statistical arguments underpinning the action level that OSHA has used for some years. According to the UAW's calculations, the action level should actually be set at one-tenth the PEL to accomplish the purpose OSHA intended. Accordingly, the UAW argued that: ''[I]f you leave it [the action level] at 1/2, [there is] almost the virtual certainty that workers are overexposed on that job.'' In response, OSHA notes that its experience with action levels set at one-half the 8-hour TWA PEL has been favorable and that employers and employees have benefitted from the use of the action level concept. In particular, it is OSHA's experience that, for most workplaces, variability is normally such that an action level set at one-half the TWA PEL is appropriate. The final standard thus continues this practice.

Emergency means any occurrence, such as but not limited to, equipment failure, rupture of containers, or failure of control equipment, which results, or is likely to result in an uncontrolled

release of MC. The word ''uncontrolled'' was changed from ''unexpected'' in the proposal to be more descriptive and to be consistent with the Hazard Communication Standard (29 CFR 1910.1200) and the Hazardous Waste Operations and Emergency Response Standard (29 CFR 1910.120). Incidental releases of MC—i.e., those where the substance can be absorbed, neutralized, or otherwise controlled at the time of release by maintenance personnel or other employees working in the immediate release area—are not considered to be emergencies within the scope of this standard. Dow Chemical Company [Ex. 19–31] indicated that the examples of emergencies provided in the proposal (purging lines and cleaning sludge from tanks) should not be included in the final rule. Other commenters [Exs. 19–25, 19–28, 19–57] agreed with Dow that the examples provided with the definition in the proposal were inappropriate. In particular, Eli Lilly and Company [Ex. 19–28, p. 7] stated

> Lilly agrees with the concept that an emergency should be tied to unexpected releases. It is therefore curious and illogical that the examples given—purging of lines and cleaning tanks—are not unexpected events. To the contrary, in the pharmaceutical industry these are planned events which could even occur daily.

On the other hand, the Upjohn Company [Ex. 19–49] commented as follows:

> The language ''unexpected significant release'' is very vague and will not result in any consistent interpretation as to what type of a release meets this definition. We would recommend that the language be changed to ''* * * which may lead to employee exposure at or above the eight hour, timed-weighted average (TWA) or at or above the short-term exposure limit (STEL).''

OSHA acknowledges that the language in question could be misunderstood and has deleted the parenthetical listing of some examples of emergency situations. Furthermore, the Agency recognizes that emergency situations, by their very nature, are difficult to anticipate and describe. Therefore, OSHA has not provided examples of emergency situations in the final rule. Instead, the final rule lists situations that OSHA does not consider emergencies, because these will help employers to identify situations in their workplaces that do constitute emergencies. OSHA recognizes that emergencies have certain aspects in common but that other aspects are specific to a given workplace. For example, employee exposure must be uncontrolled for an emergency to exist. Provisions of the standard that include requirements that employers must meet in case of an emergency include Methods of Compliance, Respiratory Protection, Medical Surveillance, and Employee Information and Training.

Employee exposure is defined as that exposure to airborne MC which occurs or which would occur if the employee were not using respiratory protective equipment. This definition is consistent with OSHA's previous use of the term ''employee exposure'' in other health standards.

Methylene chloride (MC), or dichloromethane, means an organic compound with the chemical formula, CH2Cl2. Its Chemical Abstracts Registry Number is 75–09–2. Its molecular weight is 84.9 g/mole. Other information regarding the characteristics of MC may be found in the appendices to the final standard. MC is a colorless, volatile, liquid with a chloroform-like odor and is not flammable by standard tests in air, but will burn under extreme conditions. It has a boiling point of 39.85 C (104 F) at standard atmospheric pressure, a lower explosive limit of 12% and an upper explosive limit of 19.5% in air. It is completely miscible with most organic solvents but is sparingly soluble in water (1.3% by weight at room temperature). It has an extensive oil and fat solubility. Decomposition products during combustion or fire include phosgene, hydrochloric acid and carbon monoxide.

Physician or other licensed health care professional is defined as a person whose legally permitted scope of practice allows him or her to independently provide or be delegated the responsibility to provide some or all of the health care services required by final rule paragraph (j), Medical Surveillance. Use of this phrase is designed to increase the flexibility of the standard; the proposal used the more restrictive term ''physician.'' OSHA intends that employers should consider the opinion of the applicable state licensing board, which defines the scope of practice for licensed health care professionals, when they are determining the appropriate provider to supply some or all of the medical services required by the standard. The new terminology recognizes that there are many services that non-physicians can provide, that some non-physicians have particular expertise in diagnosing and treating occupationally related diseases, and that the use of these providers is often a cost-effective and protective approach to the provision of medical care.

Regulated area means an area, demarcated by the employer, where an employee's exposure to airborne concentrations of MC exceeds or can reasonably be expected to exceed either the eight (8)-hour time-weighted average limit or the short-term exposure limit. The wording of this definition has been changed slightly from that in the proposal for clarity. The requirements for regulated areas are discussed below in relation to paragraph (e).

OSHA has added a definition for *symptom* to the final rule to clarify what is meant by that term when it is referred to in the regulatory text. MC has a wide range of possible adverse health effects. This definition clarifies what portion of that range would be considered a symptom for purposes of the standard. The covered symptoms would include indications of central nervous system effects, such as headaches, disorientation, dizziness, fatigue, and decreased attention span; cardiac effects, such as chest pain and shortness of breath; and skin effects, such as chapping, erythema, or skin burns.

The definitions of ''*Assistant Secretary*,'' ''*Authorized Person*,'' ''*Director*'' and ''*This section*'' are consistent with OSHA's previous uses of these terms in other health standards.

The Boeing Company [Ex. 19–26] suggested that a definition be added for ''*work area*'' to preclude unnecessary monitoring in areas that do not contain MC. OSHA does not believe that this is necessary. If there is no MC present in an area, no monitoring needs to be performed for MC. In addition, the focus of this standard is employee exposure, as measured by personal monitoring, and not particular locations.

Paragraph (c) Permissible Exposure Limits

OSHA is promulgating an 8-hour time-weighted average (TWA) permissible exposure limit (PEL) of 25 ppm, and a short-term exposure limit (STEL) of 125 ppm averaged over 15 minutes, as proposed. OSHA has determined, based on evidence in the record, that occupational exposure to MC at the current 500 ppm 8-hour TWA PEL presents a significant risk of material health impairment, and particularly of cancer, to exposed employees and that compliance with the new standard will substantially reduce that risk. In combination with the STEL, the 8-hour TWA PEL and the other industrial hygiene provisions of the standard will also protect exposed employees from the other health effects caused by exposure to MC.

The basis for the 8-hour permissible exposure limit is discussed above in the sections on Health Effects and Significance of Risk, as well as in the economic analysis. OSHA believes that

compliance with the new 25 ppm 8-hour TWA PEL is feasible and necessary to protect exposed employees from this significant risk of material health impairment.

OSHA received comments from a number of rulemaking participants suggesting that the proposed PELs and, by association, the action level be revised. The arguments for revising the proposed PELs were based on interpretations of the scientific support for given PELs and the feasibility of particular PELs in certain situations. Some commenters felt that the current level of 500 ppm does not provide adequate protection for employees and agreed that the PEL should be set at 25 ppm [Exs. 19–15, 19–49]. Specifically, Striptech International, Inc. [Ex. 19–15] stated:

> The OSHA proposed 25 ppm standard for MC does substantially eliminate significant risk and it is feasible and definitely appropriate. The technology exists to enable the industries using MC to comply or to use an alternate method.

However, a number of rulemaking participants [Exs. 19–22, 19–23, 19–36, 19–38, Tr. 530, 9/18/92, Tr. 1776, 9/24/92, Tr. 1869, 9/24/92] suggested that OSHA set the 8-hour TWA PEL below 25 ppm, because they believe that the proposed 25 ppm limit would not adequately protect workers. For example, the UAW stated that setting a PEL at 25 ppm ''will permit too much exposure to methylene chloride, therefore placing workers at great risk, contrary to the requirements of the OSHA Act'' [Tr. 1869, 9/24/92]. The UAW stated that the proposed limit ''would permit 2 deaths per thousand workers,'' and therefore suggested setting a PEL of 10 ppm, which the union felt would be feasible through specified engineering and work practice controls [Ex. 19–22, Tr. 1869, 9/24/92]. Scott Schneider, representing the IUE, also suggested that ''because of the evidence of health effects from low level exposures'' to MC, the PEL should be lowered below 25 ppm [Ex. 19–38]. The IUE and the ACTWU both supported the UAW recommendation of 10 ppm [Tr. 530, 9/18/92, Tr. 1776, 9/24/92].

The Laborers' Safety and Health Fund of North America [Ex. 19–36] suggested that worker exposure should be controlled to the lowest feasible level, which is consistent with NIOSH's position. NIOSH recommended ''that occupational exposure to methylene chloride, which is a potential occupational carcinogen and may induce ischemic heart disease, be reduced below the proposed PEL to the lowest feasible level'' [Tr. 868, 9/21/94]. OSHA agrees with these commenters that a significant risk remains at 25 ppm, but believes that this level is the lowest level for which OSHA can currently document feasibility across the affected application groups and industries.

OSHA's primary justification for the new standard is the risk of cancer associated with exposure to MC. Some commenters stated that the carcinogenicity of MC has not been proven and therefore that carcinogenicity should not be the basis for setting the PEL [Exs. 19–18, 19–29, 19–31, 19–45]. In particular, Kodak [Ex. 19–18] stated that it ''does not believe that the human or animal data demonstrate a need to establish methylene chloride exposure limits at the levels proposed by OSHA in order to adequately protect employee health.'' Mr. Bixenman, representing Benco Sales, testified [Tr. 2638, 10/16/92] ''And surely with our current level of technology, if methylene chloride were a human carcinogen, it could be established without question with actual diagnosed cases.'' Also, the Air Transport Association stated [Ex. 19–75]:

> [T]he limited findings regarding cancer in mice at high MC dosage is weak justification for the proposed regulatory action. None of our members have found permanent health symptoms related to the use of MC, while usage at some facilities goes back at least 30 years. We have no data or experience connecting heart disease with MC use.

As discussed more extensively in the Quantitative Risk Assessment section, above, OSHA has based its assessment of MC cancer risk on the determination (supported by the NTP, EPA, and other agencies) that there is clear evidence of MC carcinogenicity in mice and rats. Although there are a few substances for which clear evidence of carcinogenicity in rodents has been deemed to be irrelevant to humans due to compelling evidence of mechanisms of action unique to the species tested, no such evidence exists for MC. In fact, as discussed in the Risk Assessment section, mechanistic evidence adds to the weight-of-the-evidence suggesting that MC is also carcinogenic in humans.

OSHA's final risk estimate indicates a risk of 7.5 deaths per 1000 workers exposed to MC at 50 ppm over a working lifetime and a risk of 3.6 deaths per thousand workers exposed to MC at 25 ppm over a working lifetime. OSHA has determined, using quantitative risk assessment, that the estimated risk of developing cancer warrants setting the 8-hour TWA PEL at 25 ppm and a 15-minute STEL at 125 ppm; in fact, at the 25 ppm PEL the residual risk still greatly exceeds any significant risk threshold, and only the lack of documentation of the feasibility of lower PELs across the affected industries has convinced the Agency not to reduce the PEL even further at this time.

OSHA disputes the contention of Mr. Bixenman that ''actual diagnosed cases'' are a precondition for establishing that a particular substance is carcinogenic to humans. Due to the natural background rate of all cancers, epidemiologic studies of groups are the only way to analyze human cause-effect relationships. As discussed in the Quantitative Risk Assessment section, OSHA has concluded that some of the available epidemiologic studies suggest a positive association between MC exposure and human cancer and that no epidemiologic studies of sufficient power exist to cast serious doubt on such conclusions.

Several commenters preferred a PEL of 50 ppm, which is the current ACGIH threshold limit value for MC, because they felt that a 25 ppm PEL would be either too costly to implement or the technology to achieve such a level of control was not available [Exs. 19–2, 19–3, 19–12, 19–14, 19–15, 19–29, 19–31, 19–35, 19–37, 19–39, 19–48, 19–50, 19–56, 19–57]. For example, Abbott Laboratories [Ex. 19–29] commented that specific processes in the pharmaceutical industry ''cannot be controlled through existing conventional engineering controls.'' Also, AMETEK [Ex. 19–12] stated that ''It will be hard for many industries to reach the 50 ppm level and extremely difficult, if not, impossible, for most to reach the 25 ppm level.'' Therefore, this commenter proposed ''that OSHA set the PEL for methylene chloride at 50 ppm (8-hour TWA) with no AL [action level] and leave the STEL at 125 ppm (15-minute average) as originally written.'' AMETEK contended that this approach ''combines aspects of both ACGIH guidelines and OSHA's proposed standard into a regulation which would be both protective of worker health and economically feasible for industry'' [Ex 19–12].

Many other commenters argued for a PEL of at least 100 ppm [Exs. 19–1, 19–4, 19–10, 19–11, 19–16, 19–24, 19–47, 19–51, 19–52, 19–53, 19–54, 19–67, 19–75, 19–79, 98, 115–3, Tr. 397, 9/17/92, Tr. 2216, 10/14/92, Tr. 2627, 10/16/92, Tr. 2671, 10/16/92, Tr. 2702, 10/16/92]. For example, Besway Systems, Inc., testified [Tr. 397, 9/17/92]: ''We would like to see a PEL for these companies of 200 ppm, which we've been able to show is safe and economically attainable in our real life experience. We

believe that the absolute maximum PEL for our industry should be set at 100 ppm eight hour time weighted average. . . .'' Also, Benco Sales [Tr. 2627, 10/16/92] stated ''We feel the American workers would receive more benefit by implementation of an exposure level of 100 parts per million, which is achievable, and the subsequent enforcement of that level.'' ChemDesign Corporation [Ex. 19–24] believes that the ''sharp reduction in the exposure limit is unjustified based on lack of credible data that this chemical has the potential to cause cancer in humans.'' This commenter therefore suggested that the PEL be ''lowered by a factor of five to 100 parts per million'' [Ex. 19–24].

Other commenters supported a variety of PEL values. One suggested that a lower PEL be phased in over time, with 75 ppm for two years, then 50 ppm for two years, and finally 30 ppm [Ex. 19–20]. The reasoning behind this suggestion was that, during this period, alternative options to best fit specific operations could be evaluated and implemented and sufficient time provided to gather the funds necessary to implement the entire system [Ex. 19–20]. OSHA holds, however, that the types of engineering controls required under this standard are relatively simple and that engineering to 75 ppm, then 50 ppm, then 30 ppm is likely to be more costly in time and money than engineering to or below 25 ppm initially. The suggested phase-in would also be administratively burdensome for employers, who would be subject to changing OSHA requirements over the years, with no clear advantage in reducing the costs of compliance. In addition, if OSHA allowed such a phase-in period, workers would be exposed to MC at higher levels than would occur if OSHA required no phase-in period. Therefore, the Agency sees no advantage to using the phased-in approach described. Moreover, the Agency notes that the time-frames for compliance with the provisions of the standard, including implementation of engineering controls, have been tailored to the size of the establishments, in order to give all employers a reasonable amount of time to gather resources and information necessary to comply with this regulation. See the discussion of start-up dates later in this document.

Smith Fiberglass Products, Inc. suggested that the PEL should remain at 500 ppm because there is no evidence of human harm at the present PEL and STEL, since ''studies with rats and mice show that only a serious overdose far above the present STEL can cause carcinogenic effects'' [Ex. 19–82]. Another commenter [Ex. 19–86] stated that ''The present PEL of 500 parts per million (ppm) is not protective enough of employees based on toxicological data developed since the PEL was established.'' This commenter therefore suggested that the PEL should be lower than 500 ppm but higher than 25 ppm (no specific value identified). As discussed above, however, OSHA has determined that exposure to MC above 25 ppm poses significant cancer risks and that it is feasible to protect affected employees from those risks (see the Significance of Risk section of the preamble).

A number of commenters addressed the availability of suitable substitutes for MC in their concerns about feasibility [see, e.g., Exs. 19–6, 19–8, 19–37, 19–43, 19–55, 19–74, 19–79, 19–84, 115–3; Tr. 433, 9/17/92; Tr. 1591, 9/23/92; Tr. 1712–13, 9/24/92; Tr. 2636–38, 10/16/92]. Substitution is often a valid means of controlling exposures to a particular hazardous chemical when a less hazardous substitute is available that can be used to perform a similar function. In particular, some commenters stated that there are no viable substitutes for MC products used to perform particular tasks. These participants argued that companies would go out of business because they would be unable to comply with the final standard in a feasible way [Exs. 19–6 and 19–8]. In addition, one commenter [Ex. 19–8] expressed concern that substitute products would pose fire hazards. The National Tank Truck Carriers, Inc. testified [Tr. 1712, 9/24/92]:

> One company which discontinued the use of methylene chloride found it necessary to supplement the methylene chloride substitute with even more hazardous acetone and toluene in order to remove the residues from the trailers and containers and properly service the industry by providing clean trailers.

OSHA has determined that for all application groups, compliance with this regulation can generally be achieved through the use of engineering controls and work practices. The Agency's Final Economic Analysis estimated the cost of compliance assuming that almost all firms would continue using MC and that only a small fraction of firms would substitute away from MC. OSHA agrees that, in an individual establishment, the potential use of substitution as a means of control must be evaluated carefully to ensure that the magnitude of the hazard posed is not the same or increased as a result of the substitution. For some applications described in this regulation, many substitutes for MC are available for specific applications that do not pose increased health or safety hazards. In general, however, OSHA has based it findings of feasibility not on the ability of companies in the affected sectors to substitute away from MC but on their ability to implement conventional engineering and work practice controls.

In addition to the 8-hour TWA PEL, OSHA is promulgating a short-term exposure limit (STEL) of 125 ppm, measured over a 15-minute period, to protect employees from the acute toxicity of MC and its metabolites. The acute toxicity of MC is characterized primarily by CNS effects, such as decreased alertness and coordination, headaches, and dizziness, which may lead, in turn, to accidents on the job as well as material impairment of health. Absence of a STEL would mean that employees could be exposed to up to 800 ppm for 15 minutes. Such levels are clearly associated with central nervous system effects.

MC is also metabolized to carbon monoxide (CO). CO produced from MC exposure has the same toxic effects in the body as direct exposure to CO does. The primary toxic effect of CO is reduction of the ability of the blood to carry oxygen to the tissues of the body.

In the body, carbon monoxide is converted to carboxyhemoglobin. Background levels of carboxyhemoglobin in the non-smoking U.S. population vary from approximately 0.5% to 2.0%. Carboxyhemoglobin in smokers ranges from approximately 3% to 10%. Additional body burden of CO (carboxyhemoglobin) due to MC or direct CO exposure can have adverse health effects on affected individuals. For example, exposure to relatively low levels of carbon monoxide (for example, levels which increase carboxyhemoglobin by 2%) reduced time to angina in patients with pre-existing heart disease exposed to occupational levels of CO [Ex. 21–93]. Exposure of pregnant women to CO has been shown to produce adverse health effects on the developing fetus. Workers with anemia or other blood abnormalities may be at increased risk of material impairment to health because of an already decreased oxygen-carrying capacity.

The carbon monoxide-mediated cardiac effects of MC exposure are of particular concern in the occupational setting because a significant fraction of the U.S. working population (some investigators estimate 30% of the U.S. population) has silent or symptomatic heart disease. NIOSH has expressed concern that the STEL proposed by OSHA is not low enough to protect

workers from the adverse central nervous system and cardiac effects of MC.

In addition to reducing risks of cardiac and CNS effects, the STEL will also enhance employee protection from MC-induced carcinogenesis by reducing total exposure to MC and by limiting the metabolism of MC by the GST pathway (the putative carcinogenic metabolic process). Metabolic evidence suggests that the GST pathway produces more than proportionately greater quantities of the putative carcinogenic metabolite when MC concentrations reach levels of about 100 ppm. For this reason, it is important to limit high concentration, short duration exposures to MC. Thus the STEL will reduce the exposure-related risks of acute CNS effects, episodes of carboxyhemoglobinemia, and cancer.

Another advantage in requiring a STEL is that it focuses attention on sources of MC exposure in the workplace. General industrial hygiene principles state that a well-controlled process should have peaks no higher than five times the 8-hour TWA. Measurement of STEL exposures can indicate point sources which have unacceptably high MC emissions and help the employer target those processes for abatement. This can be an efficient mechanism to concentrate industrial hygiene resources on those emission sources which, when controlled, will reduce total employee MC exposure.

In addition, it has been established that ''[i]f in fact a STEL would further reduce a significant health risk and is feasible to implement, then the OSH Act [section 6(b)(5)] *compels* the agency to adopt it barring alternative avenues to the same result.'' (emphasis in the original) *Public Citizen Health Research Group* v. *Tyson*, 796 F.2d 1479, 1505 (D.C. Cir. 1986) (Ethylene oxide). See also *Building and Construction Trades Department, AFL–CIO* v. *Brock*, 838 F.2d 1258, 1271 (D.C. Cir. 1988) (Asbestos).

In summary, many commenters questioned the need for a reduced PEL, for a PEL of 25 ppm, and for the particular 8-hour TWA PEL-STEL combination proposed by OSHA, citing concerns about the feasibility of these limits and the ability of companies to identify controls and/or substitutes to comply with them. However, as discussed in the final economic analysis, OSHA has determined that it is both technologically and economically feasible for facilities in all affected sectors to comply with the final rule. In almost every case, companies will be able to use conventional engineering controls and work practices to reduce their employees'' exposures to these levels. In addition, many employers will find that substitution is a viable approach to eliminating the significant risk posed to workers by MC. As the economic analysis points out, many firms in many of the covered industries have already substituted away from MC, and have enjoyed considerable cost savings in the process. Finally, it is important not to lose sight of the reasons for regulating MC in the first place: this substance poses a significant risk of cancer, central nervous system and cardiac effects, and sensory irritation to the quarter of a million workers who manufacture, formulate, use, or transport this substance in the workplace.

As the Quantitative Risk Assessment and Significance of Risk sections of the preamble demonstrate, the cancer risk remaining at an 8-hour TWA PEL of 25 ppm is clearly of great concern, in that it exceeds the 1/1000 level indicated by the Supreme Court to be clearly significant. OSHA therefore encourages employers to further reduce the MC exposures of their employees wherever it is feasible to do so. Because the residual risk remaining at 25 ppm is great, the Agency intends to gather data and information on the feasibility of reducing the 8-hour TWA PEL to reduce remaining significant risk in a future rulemaking action. The priority assigned to any future rulemaking activity will depend in large measure on the prevailing exposure levels, feasibility, scientific advances and other information, at the time OSHA considers further proposals; to the extent prevailing levels are significantly below 25 ppm, the need for subsequent proposals will diminish.

Paragraph (d) Exposure Monitoring

Paragraph (d) addresses the employee exposure monitoring requirements for workplaces where employees are exposed to MC. As discussed in the preamble to the proposed rule (57 FR 57118–20), OSHA requires employee monitoring to facilitate compliance with the PELs. As a general matter, exposure monitoring of employee exposure to toxic substances is a well-recognized and accepted risk management tool. The monitoring provisions of this final MC standard are consistent with the monitoring provisions of other OSHA standards. Section 6(b)(7) of the OSH Act, which addresses rulemaking requirements for hazardous chemicals, requires health standards to include provisions for monitoring employee exposures. In the final rule, the exposure monitoring provisions have been reorganized and rewritten to improve their clarity and readability. The substance of the requirements is essentially the same, with the few exceptions noted below.

The provisions of proposed paragraph (d) elicited a considerable amount of comment and testimony. Several rulemaking participants [Ex. 19–57; Tr. 249, 9/17/92; Tr. 458, 9/17/92; Tr. 1711, 9/24/92] stated that the proposed requirements for exposure monitoring would impose excessive economic burdens on some employers (e.g., paint strippers, tank cleaners). However, in the final rule OSHA has structured the exposure monitoring requirements to minimize the burden for employers whose employees have lower exposures and for workplaces where groups of employees have similar exposures. In addition, the Agency has included some alternatives to the initial monitoring provisions that will reduce the amount of monitoring required for some workplaces. Ultimately, however, the Agency has determined that it is essential to the protection of exposed employees that exposure levels be quantified in order to select and implement the proper measures to reduce employee exposures to MC.

The overall rulemaking record supports the need for exposure monitoring to ascertain exposure levels for the purpose of designing appropriate protective measures for employees. In addition, evidence in the record indicates that the exposure monitoring requirements are economically and technologically feasible for firms in all of the affected industry sectors. (See the discussion in the Final Economic Analysis [Ex. 129].)

Paragraph (d)(1) sets forth the general requirements that apply to all monitoring provisions. Paragraph (d)(1)(i) states that employers must characterize the MC exposure of each employee. Employers may chose one of two ways to determine an employee's MC exposure level. First, the employer can take a personal air sample in the breathing zone of each affected employee. This approach is the most precise method of exposure monitoring because it allows each employee's exposure to be individually ascertained. However, OSHA recognizes that this approach may be burdensome for employers with many employees. Therefore, paragraph (d)(1)(ii) permits employers to establish a representative monitoring scheme.

Under this option, a personal breathing zone air sample may be considered representative of another employee's 8-hour TWA or STEL exposure if the following conditions are met. First, the sampled employee must

be that employee who is likely to have the highest MC exposure among the employees included in the group that is to be represented by the sample. Second, if the employer wishes a sample taken on an employee in a given job on one work shift to represent the exposure of another employee in the same job classification on another shift, the employer must sample at least one employee in each job classification in each work area during every work shift. Paragraph (d)(1)(ii) also contains an exception under which a personal breathing zone sample taken on one employee in one job classification in a given work area and on a particular shift will be considered representative of the exposure of employees on other shifts, where the employer documents that the tasks performed and conditions in the workplace are similar for all employees whose exposures are represented.

The provision for representative sampling, which is very similar to the corresponding provision of the proposed rule, eliminates unnecessary monitoring and thus further improves the cost-effectiveness of the standard. In a change from the proposal, the final standard also allows employers to use representative monitoring to comply with the standard's requirement for initial monitoring. OSHA believes that representative initial monitoring is appropriate in those cases where the employer can accurately determine which employees are likely to have similar exposures.

The accuracy of the methods used to perform exposure monitoring is addressed under paragraph (d)(1)(iii). For monitoring of airborne concentrations above the 8-hour TWA PEL or the STEL, the results must be accurate within plus or minus 25 percent at a confidence level of 95 percent. Where concentrations are above the action level but at or below the PEL, the accuracy must be within plus or minus 35 percent at a confidence level of 95 percent.

Methods of measurement are presently available that can detect MC within these limits. One such method is OSHA method 80, which has a limit of detection of 0.201 ppm. Copies of this method are available from OSHA and can be downloaded from OSHA's World Wide Web site on the Internet at ''http.www.osha.gov/.'' Sampling and analysis may also be performed by portable direct reading instruments, real-time continuous monitoring systems, passive dosimeters or other methods that meet the accuracy and precision requirements of the standard under the particular conditions which exist at the employer's worksite.

Paragraph (d)(2) requires employers to make an initial determination of affected employees' exposure to MC. OSHA anticipates that most employers will need to perform monitoring in order to characterize employee exposure and has framed the rule accordingly. The standard allows employers to characterize their employee exposures using other means, providing that they can meet the requirements for such other means presented in the standard. For example, as discussed above, some employers may have objective data that establishes that employees will not be exposed above the action level or the STEL under reasonably foreseeable circumstances. Some employers generate such data themselves, while others rely on information provided by the manufacturer or supplier. Accordingly, paragraph (d)(2)(i) provides that employers can rely on objective data in certain circumstances in lieu of performing initial monitoring. The objective data must represent the highest MC exposures likely to occur under reasonably foreseeable conditions of proccessing, use, or handling in the workplace, and the employer must document the objective data relied on (see paragraph (m)). This provision corresponds to proposed paragraph (a)(2), which was the subject of several comments [Exs. 19–14. 19–31, 19–57].

Occidental Chemical testified [Tr. 2010 and 2023, 10/14/92] that OSHA should expand the proposed objective data exemption so that mixtures with less than one percent MC would be excluded from the scope of the MC standard. The Hazard Communication Standard (HCS) addresses mixture composition for the purpose of identifying those constituents and concentrations that impart their hazardous characteristics to the mixture as a whole. According to the HCS, carcinogenic substances such as MC are considered to impart their carcinogenic characteristics to the mixture if they are present in concentrations of more than one-tenth of one percent or can be released in concentrations that exceed an existing PEL. This is a much more protective requirement than that suggested by Occidental, and the Agency believes it would be inappropriate to lessen the protections provided to employees under the HCS in this substance-specific MC standard. Therefore, OSHA has not made the suggested change.

In addition, OSHA recognizes that it would be unreasonable to require initial monitoring under this standard where employers have already performed the monitoring needed to characterize employee exposure. Paragraph (d)(2)(ii) allows employers who have monitored their employees' exposures to MC within one year prior to April 10, 1997 and that monitoring complies with the accuracy and other requirements for monitoring contained in the final rule, to designate such monitoring results as sufficient in lieu of performing the initial monitoring.

Dow Chemical Co. [Ex. 19–31] commented that OSHA should allow monitoring data collected as much as two years prior to the effective date of the final rule to qualify as initial monitoring data. The Agency believes that data more than a year old would be unlikely to provide a reliable basis for characterizing employee exposure, because workplace conditions may well have changed since such data were collected. Accordingly, the Agency has not made the suggested change.

Addressing this point, Scott Schneider of the International Union of Electronic, Electrical, Salaried, Machine and Furniture Workers (IUE) testified [Tr. 531, 9/18/92] as follows:

> While we support the requirements for exposure monitoring that were proposed, we have reservations about section (d)(2)(ii) regarding the use of ''earlier monitoring results'' to satisfy the initial monitoring requirements. OSHA must specify exactly which requirements the data must meet, in terms of both quality and quantity. Otherwise, it will be an enormous loophole for companies to avoid monitoring.

The International Brotherhood of Painters & Allied Trades (IBPAT) agreed with Mr. Schneider; the union stated that the use of ''historical monitoring data to characterize exposures for similar processes * * * may lead to erroneous estimates of actual exposures'' [Ex. 19–23]. OSHA believes that the concerns of these commenters have been addressed in the final rule because, to be acceptable under the standard, any previously gathered exposure data must meet the analytical, sampling, and other requirements specified for initial monitoring.

A number of commenters addressed the application of monitoring requirements in construction [Ex. 19–23; Tr. 544–45, 9/18/92; Tr. 814–17, 9/21/92; and Tr. 1377–80, 9/23/92]. OSHA agrees that conditions on construction sites often present special industrial hygiene and monitoring problems, particularly since the job may be completed before sampling results taken by conventional personal monitoring methods have been returned from the laboratory. For example, IBPAT [Ex. 19–23] pointed to the exposure variability that typifies construction sites, noting that weather, a highly transient workforce, and other factors often

complicate accurate characterization of construction worker exposures. OSHA's Advisory Committee for Construction Safety and Health (ACCSH) and other participants suggested that OSHA allow the use of direct-reading instruments to address this problem [ACCSH Tr. 100–103, 7/28/92; Workgroup report, pp. 3–4; Tr. 814–818, 9/21/92; Tr. 1377–1382, 9/23/92].

In response to these comments, the final rule has been revised to allow the use of such instruments where employees are exposed to MC on fewer than 30 days within a given year. This means that construction employers who are involved in short-term construction projects will be able to use these instruments to characterize the MC exposures of their employees. Paragraph (d)(2)(iii), which addresses transient workplaces or work operations where employees are exposed on fewer than 30 days a year, permits employers to use direct reading instruments such as detector tubes to estimate exposure and determine what protective measures to provide to their MC-exposed employees. Although these simple measurement tools often do not meet the accuracy requirements that other types of monitoring methods do, they have the advantage of immediate results and thus allow employers to provide protection immediately. OSHA believes that this provision is responsive to the comments discussed above and represents an effective solution to a difficult worker protection problem.

Paragraph (d)(3) addresses periodic monitoring. Table X–1, below, which corresponds to Table 1 of paragraph (d)(3), displays the various monitoring scenarios possible under the final rule's periodic monitoring requirements. When the initial determination shows employee exposures to be at or above the action level or above the STEL, the employer is required to establish a periodic monitoring program. The 8-hour TWA monitoring is to be done every six months if exposures are at or above the action level but at or below the 8-hour TWA PEL and the STEL. The 8-hour TWA or STEL monitoring must be done every three months if the initial determination or subsequent monitoring shows results that are above the 8-hour TWA PEL or the STEL, respectively. If two consecutive subsequent monitoring results taken at least seven days apart show that exposures have decreased to or below the 8-hour TWA PEL, but above the action level, the frequency may be decreased to every six months. Eight-hour TWA monitoring may be terminated when two consecutive monitoring results taken at least seven days apart show that exposures are below the action level. STEL monitoring may be terminated when two consecutive monitoring results taken at least seven days apart show that exposures are at or below the STEL (See note to paragraph (d)(3)).

There are six possible initial determination exposure scenarios, or combinations of 8-hour TWA and short-term exposures, that determine the frequency of required monitoring. Table X–1 below lists these six exposure scenarios, along with their monitoring frequencies. As shown by Table X–1, the action level trigger largely determines whether employers must monitor employee exposure to MC. The only exception is the scenario in which 8-hour TWA exposures are below the action level and short-term exposures are above the STEL. In this case, exceeding the STEL obligates employers to monitor short-term exposures four times per year at those job locations where the STEL was exceeded, but employers are not required to monitor 8-hour TWA exposures at those job locations.

TABLE X–1.—SIX INITIAL DETERMINATION EXPOSURE SCENARIOS AND THEIR ASSOCIATED MONITORING FREQUENCIES

Exposure Scenario	Required Monitoring Activity
Below the action level and at or below the STEL	No 8-hour TWA or STEL monitoring required.
Below the action level and above the STEL	No 8-hour TWA monitoring required; monitor STEL exposures every three months.
At or above the action level, at or below the TWA, and at or below the STEL.	Monitor 8-hour TWA exposures every six months.
At or above the action level, at or below the TWA, and above the STEL	Monitor 8-hour TWA exposures every six months and monitor STEL exposures every three months.
Above the TWA and at or below the STEL	Monitor 8-hour TWA exposures every three months.
Above the TWA and above the STEL	Monitor 8-hour TWA exposures and STEL exposures every three months.

Several commenters stated that the proposal required unnecessarily frequent monitoring [Exs. 19–25, 19–26, 19–28, 19–30, 19–31, and 19–57]. Some commenters [Exs. 19–30, 19–31] said that the frequency of monitoring should be the same as that in the benzene standard (29 CFR 1910.1028 (e)(3)), since frequent monitoring does nothing to reduce or control exposures. The benzene standard requires monitoring at least every six months if employee exposure exceeds the 8-hour TWA, at least every year if exposure is at or above the action level but at or below the 8-hour TWA, and ''as necessary'' to evaluate short-term exposures. OSHA believes that MC exposure is highly variable due to the substance's volatility (vapor pressure = 350 mmHg at 20 C, compared with a vapor pressure for benzene of 75 mmHg at the same temperature) and the way that it is commonly used (e.g., in manual applications), and that reducing the frequency of exposure monitoring could therefore result in inadequate employee protection. The frequency of monitoring required by this MC standard is similar to that in other OSHA standards such as Ethylene Oxide (29 CFR 1910.1047), and is sufficient to characterize employee exposure and to evaluate the effectiveness of exposure control strategies.

The Advisory Committee on Construction Safety and Health suggested that OSHA trigger exposure monitoring by frequency of use as well as the exposure level. OSHA believes, however, that the magnitude of an employee's exposure is the appropriate determinant of monitoring frequency (and the selection of protective measures based on the results of that monitoring) because it is cumulative MC dose, not frequency of use, that determines the significance of the risk to which employees are exposed. Therefore, the Agency has not made the suggested change.

The Polyurethane Foam Association (PFA) [Ex. 19–39] questioned the necessity of requiring exposure monitoring at the action level. According to the PFA [Ex. 19–39], ''An action level of 12.5 ppm would require

that workers be monitored at a level that has only a remote health risk associated with it. The costs of such monitoring, however, would be significant.'' OSHA disagrees strongly with the PFA's analysis of the significance of the risk remaining at the action level. As discussed in the Significance of Risk and Economic Analysis sections of this preamble, only feasibility has constrained the Agency from reducing the 8-hour TWA PEL in the final rule to levels below the action level, because even at 10 ppm, the risk remaining is significant. That is, an employee exposed to an MC concentration of 10 ppm as an 8-hour TWA over a working lifetime would still be at significant risk of dying of MC-induced cancer.

Under paragraph (d)(4)(i), employers are required to perform additional monitoring when workplace conditions change or there is an indication that employee exposures may have increased. Paragraph (d)(4)(ii) requires that, where exposure monitoring is performed due to a spill, leak, rupture or equipment breakdown, the employer must clean up the MC and perform repairs and then monitor MC levels. The changes referred to in these provisions would include deliberate changes, such as a process or production change, or unexpected changes, such as a leak, rupture, or other breakdown. In the case of the latter, the employer is to perform the monitoring after taking whatever immediate action is required to clean-up or repair the equipment or source of exposure. OSHA recognizes that such occurrences can result in very high exposures. Several rulemaking participants [Exs. 19–31, 19–57, Tr. 2035, 10/14/92] stated that remonitoring is not necessary after a spill or leak since MC has a high vapor pressure, there would be no visible residual MC and no opportunity for significant exposure. However, OSHA believes that such remonitoring is an appropriate way to ascertain if proper corrective methods have been instituted and if the magnitude of an employee's exposure has changed significantly as a result of the leak or spill.

Employees are to be notified in writing of the results of exposure monitoring under paragraph (d)(5). This is to be done within 15 working days of the time the employer receives the monitoring results, and can be done either individually or by posting. When the results show that the 8-hour TWA PEL or the STEL has been exceeded, the employer must also notify employees of the corrective action being taken, and the schedule for completion of the action. This provision is effectively identical to the corresponding provision of the proposed rule.

One commenter [Ex. 19–49] argued that 15 working days is not enough time to develop corrective actions, especially where engineering controls are involved. OSHA believes that this comment misunderstands the requirement, which merely states that employers are required to ''describe the corrective action being taken * * * and the schedule for completion of this action.'' The Agency believes that 15 working days is adequate time for the employer to make a preliminary assessment that includes the immediate steps being taken to reduce employee exposure, such as utilization of air-supplied respirators, and the employer's plan for implementing permanent controls and/or work practices. This requirement is necessary to assure employees that the employer is making efforts to furnish them with a safe and healthful work environment, in accordance with section 8(c)(3) of the Act. OSHA would expect employers to update the notification when plans for permanent controls are made.

Employees or their designated representatives are provided by paragraph (d)(6) with the opportunity to observe any required monitoring of employee exposure to MC. This provision is required by section 8(c)(3) of the Act (29 U.S.C. 657(c)(3)). It was relocated to paragraph (d)(6) of the final rule from proposed paragraph (l) to consolidate all of the exposure monitoring requirements in one place. The observer, whether an employee or a designated representative, must be provided (at no cost to the observer) with any personal protective clothing or equipment required to be worn by employees working in the area that is being monitored, and must additionally comply with all other applicable safety and health procedures. These provisions of the final rule are identical to those of the proposed rule.

As noted above, OSHA received a number of comments on the monitoring provisions proposed in the NPRM. For example, Occidental Chemical Corporation requested that OSHA consider using what they termed ''exposure assessment'' rather than monitoring, testifying [Tr. 2012–2013, 10/14/92] as follows:

> [I]nstead of just looking at monitoring, which is in the middle of the process, exposure assessment looks at a basic * * * characterization: What is the characterization of the work force? What is the characterization of the workplace? What is the characterization of the contaminants in the workplace? All of that is weighed together; it's a collection of information.
>
> The next step, then, is to interpret that information and determine what are the actual exposure levels, what category would they fit into * * *. If, at that point, and this is still just a paper exercise based on that information, you * * * conclude that exposures [are] unacceptable * * * you act. You may conclude that you have insufficient data and you'd like to monitor. Or you may conclude the data are acceptable; in this case, you would act and * * * change something and go through the process again. Or, in the case they [employee exposures] are acceptable, * * * you would document that it is acceptable and then reevaluate at some regular frequency, say annually or something like that.

In response to this comment, OSHA notes that nothing in the standard prevents employers from conducting exposure assessments. Indeed, the fact that the final standard allows employers to use objective data and recent (within the past year) exposure data are both examples of the kinds of evaluation made by industrial hygienists performing exposure assessments. An employer unable to avail himself or herself of the exclusions to initial monitoring offered by the standard would logically move to the next step in the exposure assessment process: the direct monitoring of employees' exposures to MC. Thus the final rule, far from interfering with exposure assessment, actually both reflects this process and encourages employers to engage in such assessments themselves.

Paragraph (e) Regulated Areas

Paragraph (e)(1) requires employers to establish a regulated area wherever an employee's exposure to airborne concentrations of MC exceeds or can be reasonably expected to exceed either the 8-hour TWA PEL or the STEL. This paragraph was changed slightly from the proposal to clarify that OSHA is concerned with employee exposures that can reasonably be anticipated to exceed one of the PELs, rather than excessive exposures that ''may'' occur. Regulated areas can be either temporary or permanent, depending on the characteristics of a given workplace. Such areas are required by the standard to reduce employee exposures and to alert employees to those areas in the workplace that present the greatest danger of MC overexposures.

Paragraph (e)(2) limits access to regulated areas to authorized persons (a term which is defined in the definitions paragraph (b)). This provision applies when either the TWA PEL or STEL is exceeded or can reasonably be expected to be exceeded. OSHA believes that the establishment of a regulated area will help to ensure that employees are aware of areas in the workplace where MC

levels are above the 8-hour TWA PEL or STEL. OSHA believes that regulated areas are an effective means of limiting the risks of high exposures to substances suspected of being carcinogenic to humans to as few employees as possible.

Comments from Bristol-Myers Squibb [Ex. 19–14] suggested that OSHA delete the regulated area concept from the standard and replace it with a ''regulated job classification'' for jobs exceeding the PEL and a ''regulated procedure'' for procedures exceeding the STEL. This commenter's rationale was that since airborne concentrations are measured by personal monitoring and by job classification, it does not make sense to define an ''area'' of exposure. OSHA does not agree, for a number of reasons. First, in many workplaces, specific areas, such as quality control monitoring stations, mixing tanks, cutoff saw stations, spray booths, etc., are known to be associated with high levels of MC on a routine basis, and demarcating these areas protects employees by making them aware of the potential for these exposures in these locations. Second, it is standard industrial hygiene practice to use area monitoring to identify areas of exceptionally high exposures so that all non-authorized employees can be protected from overexposure. Finally, OSHA does not believe that the approach suggested by Bristol-Myers has the same potential to alert employees to the presence of high airborne concentrations that a demarcated area does, and therefore believes that the suggested change would not provide equivalent protection from overexposure.

The Laborers' Safety and Health Fund of North America [Tr. 1378–79, 9/23/92] testified that, in construction, a regulated area should be established wherever MC is used. Although there are many uses of MC on construction sites that may warrant establishing regulated areas, there are also engineering controls available (for example, portable ventilation) which may reduce employee exposures so that a regulated area would be unneccessary. OSHA believes that employers should not be required to establish regulated areas unless potential exposure levels warrant them. The Agency also believes that the employer is in the best position to determine whether the exposures from a particular MC application will warrant establishing regulated areas at a particular work site. The Advisory Committee on Construction Safety and Health also suggested that the establishment of regulated areas could replace some of the standard's monitoring requirements [Ex. 21–69]. As discussed previously, however, OSHA believes that both employers and employees benefit from knowing what exposures to MC are in a given workplace or on a specific job assignment. OSHA has therefore not revised the final rule's requirement for regulated areas in locations where exposures exceed or can reasonably be expected to exceed either or both of the PELs.

The proposal would have required that employers supply employees entering regulated areas with appropriate respiratory protection and ensure its use in such areas at all times. Several commenters [Exs. 19–25, 19–31 and 19–49] argued that respirator use in such areas should be required only if occupational exposures in such areas either exceeded the 8-hour TWA PEL or the STEL or could reasonably be expected to exceed one or both of these limits. OSHA agrees with these commenters and has revised the final rule accordingly. Paragraph (e)(3) states that employers must supply a respirator to each person who enters a regulated area, but shall require each affected employee to use that respirator only if MC exposures are likely to exceed the 8- hour TWA PEL or STEL. Thus, not all workers in regulated areas will be required to wear respirators in regulated areas at all times.

For example, under the final rule, an employer would be required to demarcate the area around a cutoff saw operator's work station in a foam blowing plant as a regulated area and to train the operator to recognize the area as regulated; however, the operator would only be required to wear a respirator in the area at times when the foam ''bun'' was coming out of the tunnel for cutting. The employer would demarcate the area because he or she recognizes, based on monitoring results for the cutoff saw operator, that this work station is one where the 8-hour TWA PEL is regularly exceeded during foam blowing operations. Because of the intermittent nature of many foam blowing operations, however, respirators would need to be worn by the operator (or other workers assisting the operator) only when foam was actually being blown. This example assumes that foam blowing operations are intermittent and that exposures at the cutoff saw would exceed the PELs only during foam blowing, although this may not be the case in all plants or at all times. In facilities where foam is blown continually and the saw operator is stationed at the end of the tunnel over the full shift, respiratory protection would likely be required to be worn in the regulated area at all times because exposures would routinely exceed the PEL in that area.

Under paragraph (e)(4), which has been added to the final rule, the employer shall ensure that, within a regulated area, employees do not engage in non-work activities which may increase dermal or oral MC exposure. This provision indicates that such non-work activities as eating, drinking, smoking, taking medication, applying lotions or cosmetics or storing such products in regulated areas are prohibited. Proposed paragraph (e)(4) has been promulgated as final rule paragraph (e)(6), as discussed below.

In addition, under paragraph (e)(5), which has been added to the final rule, the employer shall ensure that employees who are wearing respirators do not engage in activities (such as taking medication or chewing gum or tobacco) which interfere with respirator seal or performance. Proposed paragraph (e)(5) has been promulgated as final rule paragraph (e)(7), as discussed below.

Final rule paragraphs (e)(4) and (e)(5) are based on the response to NPRM Issue 41 (56 FR 57043) which indicated that OSHA was considering a provision to prohibit activities such as eating, drinking, smoking, etc. in regulated areas and asked for comments on this subject. This prohibition was supported by some rulemaking participants [Ex. 19–36, Tr. 1379, 9/23/92]. OSHA notes that it is standard industrial hygiene practice to limit such activities in regulated areas, both because employees should be aware at all times that they are working in a high- exposure area and because of health concerns. Among other things, since respirators are generally (although not always) required to be worn in regulated areas, engaging in the prohibited activities while wearing respirators might interfere with the respirator seal, placement or performance, thus reducing the effectiveness of the respirator. Furthermore, in the case of MC, smoking while being exposed to high MC concentrations (such as those prevailing in regulated areas) is particularly hazardous because MC is metabolized to CO in the body and leads to carboxyhemoglobinemia, a potentially life-threatening condition for some individuals, e.g., those with silent or symptomatic heart disease. Other OSHA health standards (e.g., asbestos, cadmium, ethylene oxide) have included similar prohibitions, and OSHA has concluded, based on the reasons discussed above and the Agency's experience with other standards, that including these

provisions in the final MC standard is appropriate.

OSHA has broadened the language and separated it into two provisions (paragraphs (e)(4) and (e)(5)) to differentiate the types of activities which would generally not be allowed in a regulated area and those which would interfere with the effective use of respiratory protection. This is consistent with OSHA's intent in this rule to allow establishment of regulated areas, but require respirator use only when the 8-hour TWA PEL or STEL is likely to be exceeded.

Paragraph (e)(6), which is essentially unchanged from the proposed provision, requires employers to demarcate their regulated areas, but it does not specify how this is to be done as long as employees are aware of the location of the area and access to it is thus minimized. Factors that the Agency believes are appropriate for employers to consider in determining how to demarcate their areas include the configuration of the area, whether the regulated area is permanent, the airborne MC concentration present in the area, the number of employees in adjacent areas, and the period of time the area is expected to have exposure levels above the PEL or STEL. Permitting employers to choose how to identify and limit access to regulated areas is consistent with OSHA's belief that employers are in the best position to make such determinations, based on the specific conditions of their workplaces. This performance-oriented approach gives employers compliance flexibility without compromising employee health.

Paragraph (e)(7), proposed as paragraph (e)(5), requires employers at multi-employer worksites who establish a regulated area to communicate information to other potentially affected employers at the worksite about the location and access restrictions pertaining to the regulated area. OSHA believes that such communication will reduce the likelihood that unauthorized persons will enter the area or that workers not involved in MC-related operations will be exposed inadvertently. Those employers whose employees are exposed to MC at concentrations above either or both of the PELs must coordinate their operations with other employers whose employees could suffer excessive exposure because of their proximity to a regulated area where MC is being used. Compliance with this provision will ensure that only those employees at multi-employer worksites who are properly authorized, trained, and equipped enter regulated areas. This provision also recognizes OSHA's awareness that, although multi-employer worksites are common in construction, they are also increasingly found in other industry sectors.

Paragraph (f) Methods of Compliance

Paragraph (f) addresses the means by which employers are to reduce employee exposures to or below the 8-hour time-weighted average (TWA) PEL or the STEL. Under paragraph (f)(1), employers are required to institute and maintain the effectiveness of engineering controls and work practices to reduce employee exposure to or below the PEL and STEL, except to the extent the employer can demonstrate such controls are not feasible. Where these measures cannot reduce the concentration of airborne MC to or below the TWA PEL and STEL, the employer is nevertheless required to implement them to achieve the lowest feasible level. The employer is required to supplement these controls with respirators where necessary to ensure that employees are not exposed to MC at levels above either the 8-hour TWA PEL or the 15-minute STEL. Section 1910.134(a)(1) of the respiratory protection standard requires respirators to be used where effective engineering controls are not feasible.

One commenter [Ex. 19–57] indicated that it should be left to professional judgment to determine whether engineering controls or respirators are the best method for protecting employees. OSHA does not agree with this comment because it fails to acknowledge the industrial hygiene hierarchy of controls, which places engineering controls ahead of administrative or personal protective equipment as methods of protecting employees from hazardous exposures. The hierarchy of controls has been established industrial hygiene practice since the 1950s and is based on the fact that engineering controls are the most effective method of protecting employees because they remove the hazard from the workplace. In contrast, respirators merely prevent employees from breathing the contaminant—it remains in the workplace air. Effective respirator use also requires constant supervision, extensive employee training and fit testing, and regular (often daily) care and maintenance of the respirator. Consequently, respirators should only be used as a means of achieving the PELs where feasible engineering controls are not available (such as in some vessel cleaning and non-stationary maintenance operations) or are not sufficient to control exposures to required levels. All OSHA substance-specific health standards have recognized and required employers to observe the hierarchy of controls, and OSHA's enforcement experience with these standards has reinforced the importance of this concept to the protection of employee health.

In the Final Economic Analysis, OSHA has described feasible control technologies for each industry affected by the final MC standard. Many employers have already implemented such controls in their workplaces and are currently achieving the MC levels required by the final rule. Examples of such feasible control strategies include dilution and local exhaust ventilation, chilling coils, magnetic pumps and magnetic floating gauges, exhausted lances for drum filling, and inline quality control sampling equipment.

OSHA acknowledges that there may be a few operations where the use of engineering and work practice controls to control exposure to MC is infeasible because exposures are highly intermittent in nature and limited in duration. In particular, OSHA is aware that the use of engineering and work practice controls to comply with the PELs is infeasible for some maintenance and repair operations and during emergency situations. Where it is infeasible to reduce workplace MC levels below the PELs through engineering and work practice controls, the employer is required to protect employees from excess exposure by providing and requiring the proper use of personal protective equipment, in this case supplied-air respirators.

As discussed in the NPRM (56 FR 57120–21), OSHA asked for comments on whether employers should be allowed to place increased reliance on the use of respirators to protect employees exposed to MC. The International Brotherhood of Painters and Allied Trades [Ex. 19–23] commented that ''[w]ith the exception of emergencies that require use of a SCBA respirator, engineering and work practice controls should be the sole method of compliance.''

In addition, the IUE [Tr. 530, 9/18/92] testified as follows:

> [R]equirements to control those exposures using engineering controls are particularly important because of the lack of adequate chemical cartridge respirators for methylene chloride. For that reason, we reject the question posed by OSHA regarding the provisions to allow greater use of respirators which came from earlier proceedings on revisions to 1910.1000.

Also, NIOSH [Tr. 884, 9/21/92] testified as follows:

> NIOSH supports the existing OSHA policy on methods of compliance, that is the

hierarchy of controls for controlling exposures to hazardous agents. Generally, this policy states that whenever feasible, engineering controls and work practices should be used to prevent exposures, and that personal protective equipment, including respiratory protection, should be used only when engineering controls are not feasible.

As discussed above, OSHA agrees with these comments. The Agency considers the use of respirators to be the least satisfactory approach to exposure control because respirators provide adequate protection only if employers ensure, on a constant basis, that they are properly fitted and worn. Also, unlike engineering and work practice controls, respirators protect only the employees who are wearing them from a hazard, rather than reducing or eliminating the hazard from the workplace as a whole. Moreover, respirators are uncomfortable to wear, cumbersome to use, and interfere with communication in the workplace, which can often be critical to maintaining safety and health. As mentioned above, OSHA has reached similar conclusions for other standards promulgated to protect employees from exposure to toxic substances. Paragraph (g) of the final standard discusses respiratory protection requirements.

The NPRM also proposed requirements for a written compliance program that would have required employers to detail their plans for implementing engineering and other controls. However, OSHA has decided to eliminate these provisions from the final rule for MC to reduce the amount of paperwork employers would be required to complete. The Paperwork Reduction Act of 1995 (PRA 95), (44 U.S.C. 3501 *et seq.*), requires agencies to minimize the paperwork burdens on the public. Preparation of written compliance plans would be classified as paperwork under the new Act. OSHA believes that the lack of a written compliance plan will not substantially reduce the effectiveness of the standard; the Agency solicits comment on this point. One of the primary benefits of a written plan is that it encourages employers to consider remedial actions soon after the standard is promulgated. For MC, however, this may not be an issue because the necessary control measures are not complex and, except for the very smallest employers, the period for compliance allowed by the standard is relatively short. Nevertheless, OSHA believes that many employers will voluntarily develop these plans because they make it easier for employers and employees to monitor progress toward compliance. OSHA will be considering including compliance plans in its standards on a case-by-case basis in future rulemakings when they are appropriate. The Agency believes that employers benefit from having a plan to meet the start-up dates, and has included examples of how this might be done in Appendix B. There were very few comments about the written compliance plan requirements, other than one stating that a written plan is reasonable but annual review and update of it is not [Ex. 19–26].

Paragraph (f)(2), proposed as paragraph (f)(1)(iv), precludes use of a schedule of employee rotation as a means of compliance with the PELs. Employee rotation reduces the extent of exposure to individual employees, but increases the number of employees exposed. OSHA is regulating MC as an occupational carcinogen, and the Agency therefore prohibits practices that would place more employees at risk. No threshold has been demonstrated for the carcinogenic action of MC, and it is therefore prudent public health policy to limit the number of workers exposed. In addition, since the dose-response relationship for MC is convex, exposure to higher concentrations for shorter periods of time is riskier than exposure to the equivalent ppm-hour concentration spread over 8 hours (when rotation is used as a method of employee exposure control, employees tend to be exposed to higher concentrations for shorter durations).

Paragraph (f)(3) requires employers to address leak and spill detection in the workplace. Employers must implement procedures to detect leaks and contain spills as well as follow appropriate methods to dispose of contaminated materials and clean-up or repair the spill or leak. These requirements were addressed in proposed paragraph (f)(1)(iii), but in the final rule have been separated out and clarified to emphasize their importance. Appendix A provides examples of procedures that would meet these requirements. Liquid MC has a high vapor pressure (350 mm Hg at 20 C). Accordingly, leaks and spills of MC-containing products could generate high airborne MC levels. The leak and spill detection program reduces the possibility of worker overexposure to MC.

Bristol-Myers Squibb (BMS) [Ex. 19–14] and Dow [Ex. 19–31] supported OSHA's performance-oriented requirement for a program to detect leaks and spills. For example, BMS stated:

[T]here are many ways in which this can be done (e.g. monitoring of tank levels, walks through areas where leaks may occur). In some cases, continuous monitoring can be done to detect leaks, however, this is not always feasible. Monitoring equipment may be very difficult and expensive to maintain and may not provide the sensitivity needed for early detection. We recommend that OSHA leave this section as it is and not specify the system or the equipment which should be used for the detection program.

Proposed paragraph (h) required employers to develop emergency plans, implement those plans when necessary, equip employees correcting emergency situations with appropriate PPE, and alert and evacuate employees potentially affected by emergencies, as necessary. In reviewing the proposed rule, OSHA concluded that the proposed requirements duplicated provisions of the Hazardous Waste Operations and Emergency Response (HAZWOPER) standard (Section 1910.120). The Agency has therefore deleted the separate MC requirement for an emergency plan, and has added a note to final rule paragraph (f)(3)(ii) which refers employers to the HAZWOPER standard for the applicable requirements.

Paragraph (g) Respiratory Protection

Paragraph (g) of the final rule addresses requirements for respiratory protection allowed to be used to comply with the MC standard. Paragraph (g)(1) requires that employers provide respirators at no cost to each affected employee, and to ensure that each affected employee uses a respirator under the following conditions:

(1) Whenever an employee's exposure to MC exceeds or can reasonably be expected to exceed the 8-hour TWA PEL or the STEL;

(2) During the time interval necessary to install or implement feasible engineering and work practice controls;

(3) In a few work operations, such as some maintenance operations and repair activities, for which the employer demonstrates that engineering and work practice controls are infeasible;

(4) Where feasible engineering and work practice controls are not sufficient to reduce exposures to or below the PELs; or

(5) In emergencies.

These limitations on the required use of respirators are consistent with OSHA's longstanding position on the hierarchy of controls in the workplace, as reflected in the respiratory protection requirements in other OSHA health standards (e.g., asbestos, §1910.1001; ethylene oxide, §1910.1047; benzene, §1910.1028; cadmium, §1910.1027) and with good industrial hygiene practice. They reflect OSHA's determination that respirators are inherently less reliable in providing protection to exposed

employees than engineering and work practice controls.

However, to reflect the changes made to the final rule's regulated area provision (paragraph (e)(1)), the final rule's respiratory protection requirements differ somewhat from those in proposed paragraph (g). In the NPRM, OSHA proposed to require that employers provide respirators in the following circumstances: (1) During the time interval necessary to install or implement feasible engineering and work practice controls; (2) in work operations, such as maintenance and repair activities, vessel cleaning, or other activities for which engineering and work practice controls are demonstrated to be infeasible, and when exposures are intermittent in nature and limited in duration; (3) in work situations where feasible engineering controls are not yet sufficient to reduce exposure to or below the PELs; and (4) in emergencies. In the final rule, another situation where respirator use is appropriate is acknowledged: whenever an employee's exposure to MC exceeds or can reasonably be expected to exceed either or both of the PELs.

The Building and Construction Trades Department, AFL–CIO, testified [Tr. 816–17, 9/21/92] that proposed paragraph (g)(1)(ii) could be interpreted by construction contractors ''as an exemption from the requirement for adopting a control strategy that places engineering and work practice controls above that of the PPE.'' In response, OSHA has revised final rule paragraph (g)(1)(ii) to clarify OSHA's intent. OSHA recognizes that it may be infeasible to control MC exposure with engineering and work practice controls during certain maintenance and repair operations, although OSHA is also aware that portable local exhaust, ''elephant trunks,'' and other means of providing ventilation to, and removing contaminated air from, process vessels and other difficult-to-reach work spaces are widely used in construction and elsewhere. The Agency also recognizes that there may be other MC-related activities where an employer could establish the infeasibility of controls, particularly where employee exposure is highly intermittent or of short duration. Accordingly, OSHA has revised proposed paragraph (g)(1)(ii) as described above. This change also addresses comments made by the Pharmaceutical Manufacturers Association (PMA) [Ex. 19–25; Tr. 1430, 9/23/92], which stated that it was infeasible for employers to protect employees during manual unloading of batch operated centrifuges and manual loading of dryers from MC exposure with engineering and work practice controls. The PMA suggested that OSHA revise proposed paragraph (g)(1)(ii) to include those loading and unloading activities in the list of operations allowed to protect affected employees through the use of air-supplied respirators. However, OSHA included examples in the proposal only to provide a general indication of the situations where the Agency would accept the use of air-supplied respirators in lieu of engineering and work practice controls. OSHA believes that the examples suggested by the PMA are too narrowly focused for inclusion in such a list. It would not be possible for OSHA to enumerate in the final rule all of the workplace-specific operations where engineering and work practice controls may be infeasible. Therefore, in accordance with longstanding OSHA practice, employers claiming that engineering and work practice controls are infeasible must establish infeasibility on an objective basis.

Other commenters were concerned about requiring respirators during emergency escape situations, noting the time involved in donning a respirator in an emergency. The Dow Chemical Company stated ''Dow believes the respiratory protection requirements for emergency escape are excessive. For the short period of time it takes to escape a release of MC, considering the minor acute effects of the material, it is excessive to require, as a minimum, a gas mask with an organic vapor canister'' [Ex. 19–86].

Similarly, comparing escaping right away or first finding a respirator and then escaping during an emergency situation, Occidental Chemical testified [Tr. 2041, 10/14/92]:

> Methylene chloride is not incapacitating so the goal should be to escape as fast as possible not trying to find a device—and it may be close, it may be further—and then put it on, which could take a minute or so, 30 seconds or a minute, and then decide about escape. That whole process becomes much longer. So I'm not advocating we don't have escape respirators, just that the process should be, escape should be the number one priority.

OSHA agrees that escape is the first priority for employees exposed to MC in an emergency situation. Furthermore, the Agency has determined, in general, that the ready availability of escape respirators is essential to ensure that employees are able to escape safely. To that end, emergency plans must provide for fast access to escape respirators where the potential for emergency exposure situations has been identified by the employer. In addition, employees must be trained to don those respirators properly and quickly and to recognize any foreseeable situations where taking the time to obtain and put on their respirators would significantly reduce their ability to escape or where they can safely escape an emergency situation without using respirators. OSHA recognizes that immediate escape is not always possible, so respirators are needed to protect those employees while they are still in the exposure area.

Paragraph (g)(2), proposed as paragraph (i)(1)(ii), requires employers to determine that any employee required by this standard to wear a supplied-air respirator in the negative pressure mode or a negative-pressure respirator for escape purposes is medically fit to use such a respirator. This provision has been changed from the proposal to recognize that medical fitness for respirator users under this standard is appropriate only for negative-pressure respirators or those operated in that mode. This change will assist employers to direct their medical surveillance resources effectively. In addition, in keeping with the greater flexibility provided by this standard to employers in selecting an appropriate health care professional, paragraph (g)(2) uses the final rule's language, ''Physician or other licensed health care professional,'' in lieu of the proposal's exclusive use of ''physician.''

Paragraph (g)(3), proposed as paragraph (g)(2), requires employers to select appropriate atmosphere-supplying respirators from among those listed in Table 2 (Table 1 in the proposed rule), which sets forth the minimum requirements for respiratory protection and is unchanged from the proposal. Employers may use respirators approved for a higher level of protection in lower concentrations of MC. Employers are required to select atmosphere-supplying respirators that have been approved by NIOSH under the provisions of 42 CFR Part 84. Also, employers must select vapor canisters which have been approved by NIOSH when they provide gas masks with organic vapor canisters for use in emergency escape. The final rule differs from proposed paragraph (g)(2) in that it does not require employers to give employees who cannot wear negative pressure air-supplied respirators or who cannot wear a negative pressure (organic vapor canister) during an emergency escape the option of wearing a respirator with less breathing resistance. OSHA believes that the respirators required by the final rule will not strain an employee's respiratory system during such use.

Issue 30 (56 FR 57042) asked if the proposed respirator selection table

(Table 1 in the proposal) appropriately regulated the choice of respirators. Several commenters suggested changes. For example, Abbott Laboratories [Ex. 19–29] suggested that OSHA allow the use of a continuous flow air-supplied hood or helmet for exposures up to 5,000 ppm instead of 625 ppm of MC. On the other hand, the Laborers' Health & Safety Fund of North America [Ex. 19–36] suggested that OSHA require employers to provide positive pressure SCBAs or airline positive- pressure full facepieces with auxiliary escape for all exposures over 25 ppm, instead of allowing any flexibility, in keeping with NIOSH recommendations for respiratory protection against carcinogens. The Advisory Committee on Construction Safety and Health [Ex. 21–69] recommended that respirators, when used, be pressure-demand, supplied air respirators with an auxiliary self-contained breathing apparatus, because of MC's fast cartridge/canister breakthrough and the lack of effective end-of-service-life indicators.

OSHA is currently in the process of developing a final standard to revise its general respiratory protection provisions in 29 CFR 1910.134. Until that rulemaking is completed the Agency will continue to rely on NIOSH's Assigned Protection Factors (APF) for determining the types of respirators required for protection to airborne concentrations of MC. The APF for continuous flow hoods/helmets is 25 in the NIOSH Respirator Decision Logic. The maximum specified use concentration for a respirator is generally determined by multiplying the exposure limit, in this case 25 ppm, by the protection factor, which is 25; therefore, these hood/helmets could be used only up to 625 ppm of MC. Using the same decision logic, OSHA believes that adequate protection can be provided by the respirators described in Table 2 when they are used under appropriate exposure conditions.

Some commenters questioned the reliability of atmosphere-supplying respirators. For example, in the furniture stripping industry commenters noted that MC could cause damage or potential damage to the hoses, the plastic lens, and the gasket of the facepiece of air line respirators or other kind of respirators, resulting in inadequate protection. [Ex. 19–11; Tr. 348–9, 9/17/92; Tr. 2146–7, 10/14/92; Tr. 2505–2506, 10/15/92]. In addition, the Occidental Chemical Corporation [Tr. 2115, 10/14/92] noted that none of the manufacturers contacted had hoses resistant to MC-induced corrosion. The Agency acknowledges that MC may damage respirator components, if the MC is left on them for extended periods of time. However, existing §1910.134 (f) already requires employers to inspect respirators frequently and to maintain respirators at their original effectiveness. In addition, MC does not damage rubber components which are available. Most importantly, if feasible engineering controls and work practices are not available, properly utilized air-supplied respirators are the only way to protect employee health from significant risk.

Issue 30 also requested information on the circumstances under which air-purifying respirators may be used. Dr. Morton Corn of Johns Hopkins University testified [Tr. 2352, 10/15/92] that ''* * * with the current state of knowledge and the breakthroughs I indicated, [allowing gas masks with organic canisters for emergency escape only] is a prudent restriction at this time.''

Several commenters disagreed with Dr. Corn and remarked that there are some situations where air-purifying respirators may be appropriate in addition to emergency situations, and recommended that OSHA expand the provision to allow the use of air-purifying (filter) respirators. For example, Occidental Chemical testified [Tr. 2113–4, 10/14/92] as follows:

> Transportation workers who make deliveries in trucks can have intermittent exposure to methylene chloride inside the truck and, if you set the PEL too low, and in that emergency situation * * * you can't have engineering controls on some types of trucks, especially if they are rented. You ought to allow the use of respirators in that case; it's a very short type exposure, goes in, takes the drum out, and then gets back in the truck. Now it may be possible to schedule operations in certain industries where the PEL is exceeded for short periods of time. Filter cartridge respirators could be used to protect the worker during the short periods of time without the use of cumbersome supplied-air respirators. Of course, you have to have changes in the regulated areas in the rules also if you're going to allow the use of respirators where you have intermittent exposures above the PEL.
>
> And a short breakthrough time does not mean a respirator is useless. If you use the NIOSH calculations, at 200 parts per million which might be typical of paint stripping, you ought to have about 118 minutes worth of time before you get breakthrough; and that may be enough in paint stripping operations.

Similarly, Bristol-Myers Squibb stated that air-purifying respirators may be appropriate in certain circumstances [Ex. 19–14]:

> Based upon the scientific information now in the record, BMS requested that OSHA consider allowing chemical cartridge air-purifying respirators for specific types of activities (lower MC concentrations, shorter durations).
>
> Organic vapor cartridges can be used for protecting employees against exposures to MC where using an air-supplied respirator would not be feasible due to costs or process (e.g. multiple working areas). Only air-supplied respirators should be used for operations involving the need for extended wear (e.g. greater than several hours).

The Eastman Kodak Company [Ex. 102] also requested that OSHA allow air-purifying respirators ''in circumstances where their effectiveness can be adequately demonstrated, engineering controls are not feasible and supplied-air respirators are impractical or potentially unsafe. OSHA also should permit the use of half mask respirators'' [Tr. 1196–7, 9/22/92]. In addition, Kodak described specific situations where it believed the use of air-purifying respirators was appropriate:

> The use of air-supplied respirators must be an essential component of the exposure-control strategies for both the Roll Coating Division and the Dope Department. Moreover, the evidence demonstrates that air-purifying canister or cartridge-type respirators may appropriately be used in some operations, such as certain dope maintenance tasks. The use of air-purifying respirators is appropriate where: (1) air-supplied respirators or other controls are impractical or potentially unsafe, (2) personal monitoring of employees is conducted regularly, (3) the extremes and conditions of the exposure potential are well characterized, and (4) used cartridges are tested after use to verify the absence of unacceptable breakthrough. It is essential that OSHA permit the use of air-purifying respirators under these circumstances so that Kodak can control employee exposure when engineering and work practice controls and air-supplied respirators are infeasible, ineffective or potentially unsafe.

OSHA considered including a provision in the final rule to allow exceptions for the use of air-purifying respirators in limited circumstances where very tight control of the respirator program is implemented. However, the Agency has rejected this alternative for several reasons. First, the record strongly supports the inadequacy of such respirators for employee protection. Consequently, the use of air-purifying respirators should only be considered when the use of air-supplied respirators presents major disadvantages. Second, a program to use air-purifying respirators would have to be very detailed and be tailored to a specific workplace. It would be difficult, if not impossible, to list all of the relevant factors and criteria for such a program in the regulatory text, which must necessarily be appropriate to apply to many workplaces. (Below, OSHA discusses the Agency's variance procedures, which employers wishing to use air-purifying respirators may use to apply for a variance.)

While there may be circumstances when the use of filter respirators may seem preferable to the use of atmosphere-supplied respirators, OSHA has concluded, as a general matter, that air- purifying respirators do not provide sufficient, consistent, and reliable protection to employees exposed to MC. In support of this conclusion, NIOSH testified as follows [Tr. 887–89, 9/21/92]:

At the request of OSHA, NIOSH has completed an in-depth study of the breakthrough characteristics of MC for organic vapor respirator cartridges and canisters under a variety of test conditions. This work was undertaken to determine MC breakthrough time for commercially available, organic vapor respirator cartridges and canisters. Several MC challenge concentrations were studied, ranging from 50 ppm to 1,000 ppm. As received cartridges and canisters were tested at equivalent flow rates of 64 Lpm through the respirator and at both 50% and 80% relative humidities (RHs). Breakthrough times were determined for individual cartridges and canisters, as well as stacked cartridges. The results of this study show rapid breakthrough of MC for organic vapor cartridges even for low concentrations of MC (e.g., 5 ppm breakthrough at approximately 30 minutes for 50 ppm challenge concentration and 80% RH). Appendix D is a detailed report of this study. At 125 ppm challenge concentration, 5 ppm breakthrough, and 80% RH, one brand of cartridge showed breakthrough times of approximately 40 minutes. The same brand of chin-style canister, that contains approximately 2 and ½ to 3 times more sorbent than two cartridges (i.e., two cartridges per respirator) showed breakthrough times of approximately 100 minutes when tested at the same conditions. The same brand of front- or back-mounted canister, that contains approximately 10 times more sorbent than two cartridges, showed breakthrough times of approximately 600 minutes. Based on the results of this study, NIOSH supports the OSHA proposal to require the use of air-supplied respirators in lieu of air-purifying respirators. However, because of the potential carcinogenicity of MC, NIOSH continues to recommend only the most protective positive-pressure respirators as noted previously.

The NIOSH study indicated that MC quickly penetrates organic vapor cartridges (in a fraction of a typical work shift), contrary to the assertions of Occidental Chemical and the other commenters mentioned above. Larger canisters, which contain greater amounts of absorbent, last longer, but are still effective for less than a work shift (except for very large canisters). Another problem with organic vapor cartridges and canisters is that MC migrates through the absorbent even when the respirator is not being used. This further decreases the breakthrough time and raises the possibility that the employee will be exposed to significant concentrations of MC. Also, humidity decreases the amount of MC collected by the absorbent.

Another problem with air-purifying respirators in the case of MC is this substance's poor warning properties, which mean that workers will not be able to smell or sense the presence of MC when breakthrough occurs. OSHA believes that employees wearing air-purifying respirators could easily have a false sense of security and be lulled into believing that they were being protected against MC when it could already have broken through the absorbent. Accordingly, OSHA has concluded that it would be inappropriate to allow broad-scale use of air-purifying respirators because of MC's quick breakthrough time and its carcinogenic health effects.

Employers who believe that the use of filter respirators is appropriate for their operations may apply for a permanent variance from the requirements of paragraph (g)(3) of this section, pursuant to the authority granted by § 6(d) of the Occupational Safety and Health Act and the procedures set out in 29 CFR part 1905. In particular, an applicant would need to establish that the use of filter respirators in a specific workplace would provide employee protection equivalent to that which would be provided through compliance with final rule paragraph (g)(3). As discussed below, the respirator program, procedures, and data needed to support the use of such respirators under a variance are extensive.

A successful variance application for an exception that would allow air-purifying respirators would have to address a number of the characteristics that employers such as Eastman-Kodak [Ex. 102] indicate they have undertaken with regard to the use of such equipment. For example, extensive exposure monitoring would have to be done to accurately characterize employee MC exposure levels. Furthermore, the breakthrough time for MC when used in the airborne concentrations expected in the workplace would have to be known, and cartridges would have to be changed before employees are unacceptably exposed. The program would have to be carefully monitored by a trained and experienced individual such as a certified industrial hygienist or the equivalent. Finally, the respirators would have to be appropriately fit tested for each affected employee. For all of the reasons stated above, OSHA has determined that the interests of employee protection will be best served by requiring all employers, except those whose respiratory program, procedures, and exposure data can support a variance request, to provide their employees with the respirators shown in Table 2.

Paragraph (g)(4), which is identical to the proposed (g)(3), requires employers to implement a respiratory protection program in accordance with 29 CFR 1910.134 whenever respirator use is required by this standard. The respiratory protection program must include basic requirements for proper selection, fit, use, training of employees, cleaning, and maintenance of respirators. For employers to ensure that employees use respirators properly, OSHA has found that the employees need to understand the respirator's limits and the hazard against which it is providing protection in order to appreciate why specific requirements must be followed.

Paragraph (g)(5) (effectively identical to proposed paragraph (g)(4)) requires that employers allow employees wearing respirators to leave the regulated area to readjust the respirator facepiece to their faces for proper fit. In addition, employers must permit employees who wear respirators to leave the regulated area to wash their faces as necessary to prevent skin irritation associated with respirator use. These requirements encourage the proper use of respirators by authorizing employees to take specific actions that ensure the effective functioning of respirators and reduce the likelihood that employees will experience adverse side effects from wearing respirators.

Paragraph (g)(6), which is essentially the same as the corresponding proposed paragraph, addresses situations where employers provide gas masks with organic vapor cartridges for purposes of emergency escape. If gas masks are used, the canisters are to be replaced before the gas masks are returned to service. This requirement is necessary because actual MC exposures during emergencies are generally not known, so the expected service life of the canister cannot be determined. In addition, the migration of MC within the canister after emergency exposure further reduces the amount of useful life remaining, posing exposure risks for subsequent users.

Paragraph (g)(7) addresses respirator fit and is essentially identical to the corresponding provision of the proposal. It requires the employer to ensure that each respirator issued is properly fitted and has the least possible facepiece leakage.

Under paragraph (g)(7)(ii), the employer must perform qualitative or quantitative fit testing initially and at

least annually thereafter for each employee wearing a negative pressure respirator, including those employees for whom emergency escape respirators of this type are provided. A note has been added to this provision to indicate clearly that the only supplied-air respirators to which this provision would apply are SCBAs operated in the negative pressure mode and full facepiece supplied-air respirators operated in negative pressure mode. Quantitative fit testing relies on objective data generated by measurements of facepiece seal leakage, in contrast to qualitative fit testing, which is based on subjective observations made by the respirator wearer. Many commenters expressed a preference for quantitative fit testing over qualitative fit testing. For example, Newport News Shipbuilding (NNS) [Ex. 19–37, p. 2] stated: ''Quantitative respirator fit testing is the method of choice. At NNS we use quantitative fit testing exclusively, as this method is more definitive than qualitative fit testing and provides a record of the fit test.'' The Shipbuilders Council of America [Ex. 19–56, p. 11] took the same view.

Several commenters noted the importance of proper selection and fit testing of respirators [Exs. 19–12, p. 3; 19–31, pp. 15–17; 19–71, p. 4]. Dr. David Newcombe of the Department of Environmental and Health Sciences at The Johns Hopkins University testified as follows:

> I think that's [quantitative fit testing] a very important parameter because, first of all, respiratory protection when it's required takes a reasonable amount of time to ensure that the individual is properly fitted so that the mask fits if that's the piece that's going to be used and is protective against the substance that you're protecting against and, in addition, I think it's important to note that some people may have deformities that cause a poor fit and, therefore, don't protect and so I would think that you have to have a careful assessment of the type of respiratory protection you're going to use, its fit in a single individual as well [Tr. 800, 9/18/92].

In most cases, OSHA has determined that positive pressure respirators are the respirators of choice for MC exposure, especially loose-fitting models such as hoods or helmets; for these respirators, fit testing is generally not needed. However, for those situations where negative pressure respirators are used, fit testing is needed. Qualitative or quantitative fit testing allows the employer to test various respirators on the employee until the appropriate fit is identified and selected for the employee.

Paragraph (h) Protective Work Clothing and Equipment

Paragraph (h) requires that, where needed, employers provide and ensure the use of the appropriate protective clothing and equipment. The requirements for protective work clothing and equipment were separated from proposed paragraph (g) (respiratory protection and personal protective equipment) and moved to paragraph (h) to facilitate compliance. Proposed paragraph (g)(6) was effectively identical to this paragraph.

Protective clothing used during exposure to MC, such as gloves or aprons, must be resistant to MC. The Building and Construction Trades Department, AFL–CIO [Tr. 832, 9/21/92] suggested that OSHA codify NIOSH's recommendations for protective clothing materials suitable for use with MC. MC is a constituent of so many different products that a codification of guidance regarding appropriate protective clothing would be unwieldy and unlikely to be complete. Further, the continual formulation and reformulation of MC products virtually ensures the early obsolescence of any protective clothing guidelines.

Therefore, OSHA believes that it is appropriate for paragraph (h) to set general criteria and for the Agency to adopt the NIOSH recommendations in a nonmandatory appendix so employers will have more detailed guidance and so OSHA can update that guidance, without rulemaking, as advances in PPE technology cause existing guidance to become outdated. As discussed above, this performance-oriented approach reflects OSHA's belief that employers are in the best position to select protective measures that are tailored specifically to the needs of their workplaces.

Paragraph (h) requires the employer to provide all necessary protective clothing and equipment at no cost to the employee and to launder, repair, replace and safely dispose of that clothing and equipment. The final rule is performance-oriented so the employer has the flexibility to provide only the protective clothing and equipment necessary to protect employees in each particular work operation from MC exposure. The generic requirements for PPE in the general industry, construction, and shipyard standards also apply to PPE for MC, except where a specific provision of the MC standard applies.

Paragraph (i) Hygiene Facilities

Paragraph (i) of the final rule establishes requirements for hygiene facilities in establishments where it is reasonably foreseeable that an employee's eyes or skin may contact solutions containing 0.1 percent or greater MC. Although such provisions were not part of the proposed rule, OSHA requested comment on the appropriateness of including such requirements in Issue 38 (56 FR 57122). Specifically, the Agency requested comment on the appropriateness of including requirements for quick-drench showers and eye-wash facilities in the final rule. OSHA described quick-drench showers as,'' * * * showers that could drench an employee with piped-in water applied with force,'' and eyewash facilities as devices ''that could flush the eyes repeatedly with a great amount of water.'' In response to comments, described below, the Agency has decided that it is not necessary to specify in the final rule when showers and eyewash facilities are required to protect employees from skin or eye contact with MC, because employers are in the best position to determine whether the MC used in their establishments meets the 0.1 percent cutoff specified in this provision and whether contact of the eyes or skin with MC can reasonably be foreseen.

Paragraph (i)(1) requires employers to provide conveniently located washing facilities appropriate to removing MC if it is reasonably foreseeable that the employee's skin may contact a solution containing 0.1 percent or greater MC through splashes or spills. MC can be absorbed into the body through skin contact (percutaneous absorption), which would add to the dose employees receive via inhalation and thus increase the risk of cancer and other adverse health effects. However, MC is not a corrosive chemical, and, if left on the skin for short periods, is not likely to cause long-term or irreversible damage. Therefore, it is important that employers make provisions to remove MC from the skin of employees quickly, although immediate drenching is not usually required. This requirement has been stated in performance-oriented language in the final rule to allow employers to determine what type of washing facilities are needed and at what distance from affected employees. This provision thus recognizes that employers in some facilities, such as furniture stripping shops where a thick MC gel is used that may burn the skin on contact, employers need to position washing facilities in closer proximity to affected employees than is the case where less hazardous solutions of MC are used. OSHA believes that this requirement of the final rule strikes the

right balance between employee protection and employer flexibility by ensuring that washing facilities for the skin will be available and appropriately placed in workplaces where such contact is likely.

MC splashed into the eyes will cause irritation if the MC is not promptly washed out, and immediate flushing is therefore required. Paragraph (i)(2) requires employers to provide appropriate eyewash facilities within the immediate work area for emergency use if it is reasonably foreseeable that an employee's eyes will contact solutions containing 0.1 percent or greater MC through splashes or spills.

Existing OSHA requirements at § 1910.141 and § 1926.51 establish generic provisions for hygiene facilities but do not focus on MC-specific situations. Existing § 1910.151(c) and § 1926.50 (g) require employers to provide suitable facilities for quick-drenching or flushing of body and eyes within the immediate work area for immediate emergency use, when the body or eyes may be exposed to injurious corrosive materials. However, because MC is not classified as a corrosive material, these existing requirements would not apply. Thus the final rule's performance-oriented requirements will provide guidance to employers about what facilities and access distances are appropriate for conditions in their workplaces. In addition, Appendix A provides examples of both washing facilities and eyewash facilities that would satisfy this requirement.

The response to Issue 38 emphasized the need for eyewash and shower facilities [Exs. 19–37, 19–56; Tr. 2644–2645, 10/16/92; Tr. 1942–1943, 9/24/92]. For example, PRMA testified [Tr. 348, 9/17/92] that MC splashes happen ''almost every day'' in furniture stripping workplaces.

Commenters also addressed the health effects associated with such accidental exposures. The Amalgamated Clothing and Textile Workers Union testified [Tr. 1825, 9/24/92]:

> I would advocate including it [the provisions for showers and eyewash facilities]. It [methylene chloride] has skin effects. Anyone who's ever stripped paint can tell you about what it's like to get it on their skin or their eyes. So it's very important to be able to irrigate an affected area promptly.

One means to provide protection from prolonged skin or eye exposure to MC from accidents is to specifically require quick-drench showers and eyewashes. The NPRM sought comments on whether or not the final rule should require employers to provide quick-drench showers and eyewash facilities. Many commenters recommended that the final rule contain such provisions [Exs. 19–15; 19–36; Tr. 532, 9/18/92; Tr. 1380, 9/23/92; Tr. 2352–53, 10/15/92]. For example, PRMA [Ex. 19–11] favored a requirement for eyewash/ quick drench facilities, stating as follows:

> An eyewash station is a safety device that should be required in any work environment where there is the possibility of splashing chemicals into ones eyes. Quick drench showers are also a safety device that should be standard equipment in every facility. MC paint removers are one of the few paint removers that are easily rinsed from one's eyes.

The Dow Chemical Company commented [Ex. 19–31]:

> Washing facilities are always a good idea when working with any material, however, it is not always necessary to have quick-drench showers, etc. Incidentally, quick-drench showers do not deliver water ''applied with force.'' They work on a deluge system delivering a large amount of water to wash off the material, not force it off. Installing showers and eyewash fountains in all workplaces may not be economically feasible. There are other systems such as water hoses, portable eye-washes, etc. that work effectively for MC. MC is a material that, in some cases, may be painful if held against the skin for a period of time, but is not eye nor skin nor life threatening. Therefore, an immediate shower is not required.

OSHA agrees that quick drench and eyewash facilities are effective means for treating employees who have been accidentally exposed to MC by spills or splashes. However, the Agency agrees with Dow Chemical that quick drench showers are not the only means to ensure proper first aid treatment for MC exposure due to accidental splashes or spills and believes that other types of washing facilities can also provide effective treatment for accidental exposure.

In some cases, the availability of a hose attached to a potable water supply would enable employers to provide effective first aid treatment. This could be an especially effective means of protection at a construction worksite. Several commenters [Ex. 19–23, 19–38; Tr. 859, 9/21/92] agreed that construction employers should have potable water at the worksite in case of accidental exposure. For example, the Building and Construction Trades Department, AFL–CIO, testified [Tr. 817, 9/21/92]:

> The standard does not address the need for available hygiene facilities. Since methylene chloride can damage the skin and eyes and potable water is often in limited supply on construction sites, the requirement for potable washing areas must be clearly stated in the standard. Potable water supplies should be of sufficient volume to provide at least 15 minutes of continuous flushing.

The Occupational Health Foundation testified that the MC standard should require that hygiene facilities be provided within a reasonable distance at construction worksites [Tr. 858–859, 9/21/92]:

> Unlike in a lot of other work sites where at least there's a sink nearby, in construction you really need to specifically mandate that provision to be sure that there's going to be water anywhere remote, you know, within a reasonable distance to the work site.

Issue 38 also requested information on the extent to which MC-exposed employees are already provided with quick drench showers and eye wash facilities. Several commenters described workplaces that have emergency shower or eyewash facilities in place. The United Automobile, Aerospace and Agricultural Implement Workers of America (UAW) testified [Tr. 1942–1943, 9/24/92] ''[t]here are a lot of showers and eye washes in areas where you have open-top chemicals or use of chemicals.'' In addition, the Occidental Chemical Corporation testified [Tr. 2159, 10/14/92]:

> . . . we conducted a survey of our customers that were not CMA and not NACCD members recently and asked them questions like that. We have some information on that. It doesn't necessarily mean that we hit a large percentage of our methylene chloride customers, though.
> . . . we have safety shower[s] and eyewash[es] [in our plants], certainly. We have . . . recommendations on it and we certainly follow the ANSI standards on it.

Newport News Shipbuilding (NNS) and the Shipbuilders Council for America both commented [Exs. 19–37 and 19–56] that ''[p]rocedures at NNS now require eyewash units. For the most part we use portable (5 gallon) units. Plumbed combination units would be better.'' The National Tank Truck Carriers, Inc. also indicated that their facilities are already equipped with emergency showers [Tr. 1750–51, 9/24/92].

With regard to the proximity of employees to emergency showers and eye washes, commenters and testimony indicated that, depending on the work operation, shower facilities have been installed as close as eight feet or as far away as 100 feet. For example, the J. M. Murray Center, testified [Tr. 1047–48, 9/21/92] that they have both eye washes and showers that are ten to twelve feet from the employees.

The Polyurethane Foam Association (PFA) testified [Tr. 1630, 9/23/92] that the proximity of shower facilities and eye washes depends on the plant and

operation within the plant, stating as follows:

> We've got methylene chloride in bulk storage area and we also use it at the foam machine. The total range from those things that you might be would be anywhere from eight feet to may be 60 feet. And I'm guessing at the 60 feet. That, again, is specific for those plants that I am responsible for. There are 80-some-odd plants out there, and I can't speak for that particular physical setup in each one of those plants.

The PFA further stated in its post hearing comment:

> Eye wash and drench showers are available in the production areas. These are located within 10 to 15 feet of the work stations, such as near bulk storage tanks and the mixing head, where a higher risk of employee exposure exists. Hygiene facilities may be 50 to 75 feet away from other work areas [Ex. L–100A].

The Eastman Kodak Company testified [Tr. 1259, 9/22/92] that emergency eye-wash and quick-drench showers are available in their workplaces, and that such stations are between 50 and 100 feet from all work areas where exposure to chemicals may occur.

Striptech International, which advocated requirements for pressure showers and eyewash facilities where workers are exposed to MC [Ex. 19–15], also testified that hygiene facilities are not readily accessible in the aircraft paint stripping industry [Tr. 1834–35, 9/24/92]:

> I've heard people ask about deluge in eye wash. Does it exist in aircraft maintenance hangars? Yes, it surely does; but you also have to look at where they normally are. They're normally on the walls. When a man or a lady is on top of an aircraft, on the tail of an aircraft, they may be nine stories in the air. If they get methylene chloride in their eyes or really a bad shot of it, they've got to come down nine stories and may be cross a 400 to 600-foot-long hangar to get to it. Deluge showers, yes; all aircraft people have them. Are they readily accessible? No.

It is important for the employer to evaluate the potential hazard posed by the particular use of MC and to provide appropriate washing facilities within a reasonable distance and eyewash facilities within immediate reach. In addition, employers are required to provide employees who are at risk of skin and/or eye contact with MC with appropriate protective clothing and eye protection. Portable eyewash units, which would significantly reduce any delay in irrigating the eyes, are available and can be located within easy access distance of affected employees. As described above, access to washing facilities should be quick, but immediate showering is not generally necessary to address the MC skin hazard. Therefore, an employee stripping an airplane would likely have time to get to the showers located along the walls of the hangar to wash MC from the skin. (Note: Some paint stripping compounds do contain corrosives, and immediate access to quick-drench facilities is essential in such cases.) Based on a review of the rulemaking record, the Agency has determined that performance-oriented provisions for hygiene facilities are reasonably necessary to supplement the other requirements of the final rule and has promulgated paragraph (i) accordingly.

Paragraph (j) Medical Surveillance

Section 6(b)(7) of the OSH Act requires that, where appropriate, occupational health standards shall prescribe the type and frequency of medical exams or other tests to be made available, by the employer or at the employer's cost, to exposed employees in order to determine if the employee's health is being adversely affected by exposure to workplace hazards.

A medical surveillance program that complies with paragraph (j) enables the employer to:

(1) Determine if an employee has an underlying health condition that places the employee at increased risk from the effects of exposure to MC;

(2) detect, insofar as possible, early or mild clinical conditions arising as a result of MC exposure, so that appropriate preventive measures can be taken;

(3) identify any occupational diseases that occur as a result of MC exposure; and

(4) help to evaluate possible trends in the incidence of these diseases.

The most serious health effect that may result from MC exposure is cancer. Although a medical surveillance program cannot detect MC-induced cancer at a preneoplastic stage, OSHA anticipates that, as in the past, methods for early detection and treatments leading to increased survival rates will continue to evolve. Moreover, the cardiovascular disease, central nervous sytem and dermal irritation effects caused by MC exposure can already be detected at early or mild stages by medical surveillance provisions such as a medical history and a medical exam. MC has not been tested adequately for the full range of possible health effects that may result from exposure, so it is also not presently possible to identify all diseases that may be associated with exposure to MC. The specific level of protection afforded the worker by the final standard cannot be predicted with certainty, although the risk of exposure for those effects that have been identified are significant, and the record shows that reducing the exposure of employees will significantly reduce that risk. An important goal of the medical surveillance program is to provide information related to the adequacy of the PELs for MC by documenting the health condition of exposed employees, particularly in the area of carcinogenicity.

Several rulemaking participants [Exs. 19–31, 19–83, Tr. 1802–3, 9/24/92] stated that the proposed medical surveillance provision should be deleted from the final rule because it would not detect employee exposure to harmful levels of MC. In addition participants contended [Ex. 19–83, Tr. 458, 9/17/92] that the medical surveillance provision is too expensive and burdensome. OSHA has determined that the medical surveillance program required by the final rule is reasonably necessary for the protection of workers. In particular, medical surveillance will directly benefit workers with cardiovascular disease, central nervous system effects, and dermal irritation. These conditions can be detected by the medical surveillance program required by this paragraph of the final rule, and the detection of such conditions can, in turn, alert the employer to potential overexposures to MC in the workplace and to the need to limit MC exposures for certain employees with underlying heart disease or other conditions.

In addition, by increasing the performance orientation of the rule, OSHA has minimized the costs of medical surveillance while maintaining its effectiveness. For example, the final rule leaves the content of laboratory surveillance for individual employees to the discretion of the physician or other licensed health care professional. Also, the requirement for a physical examination has been tailored to the age of the employee, so that employees younger than 45 generally receive an exam only every three years, instead of annually. The medical surveillance program also will aid in the evaluation of cancer incidence in the workplace and temporal trends therein.

Paragraph (j)(1) specifies the circumstances under which employers must provide medical surveillance for employees who are or may be exposed to MC. Under paragraph (j)(1)(i), employers must make medical surveillance available to all employees who are exposed to MC at or above the action level for 30 days or more in any year or above either of the PELs for at least 10 days in any year. This provision is effectively identical to the corresponding provision of the

proposed rule. Also, this requirement is consistent with the approach taken by OSHA in the benzene standard (29 CFR 1910.1028). OSHA recognizes that the health effects associated with MC exposure are, in general, the result of chronic exposures to MC. Accordingly, employees exposed only for a few days in any year will be at relatively low risk of developing MC-induced disease. The exposure duration thresholds in the final rule will thus enable employers to focus valuable medical resources on high-risk employees.

Some commenters were concerned about the use of the PELs and action level as triggers for medical surveillance. The Building and Construction Trades Department, AFL-CIO [Tr. 817, 9/21/92] was concerned that this provision would preclude medical surveillance for some employees with MC exposures that exceeded the PELs on fewer than 10 days in a given year but who might nonetheless be at risk of adverse health effects. OSHA has determined that employees who have been identified by a physician or other licensed health care professional as being at risk for cardiac disease or some other serious MC-related health condition and who are exposed to MC at levels that exceed the PELs on fewer than 10 days in any year should have the option of participating in a medical surveillance program. Accordingly, paragraph (j)(1)(ii) has been added to the final rule. This provision states that medical surveillance must be provided to any employee (1) who is exposed above the 8-hour TWA PEL or STEL for any time period, and (2) who has been identified by a physician or other licensed health care professional as being at risk from cardiac disease or from some other serious MC-related health condition, and (3) who requests inclusion in the medical surveillance program. As noted in the Health Effects section, above, OSHA is concerned that any MC exposure above either of the PELs could exacerbate cardiac problems. This paragraph enables such high-risk employees to participate in a medical surveillance program.

Under paragraph (j)(1)(iii), appropriate surveillance is required to be made available to employees exposed in an emergency regardless of the airborne concentrations of MC normally present in the workplace. Where very large amounts of materials are kept in a sealed system, routine exposure may be very low. However, rupture of the container might result in extremely high MC exposures. Thus, it is appropriate for employers who have identified operations where there is a potential for an emergency involving MC to plan ahead so that emergency medical surveillance would be available if needed. This provision is effectively identical to proposed paragraph (i)(1)(iii).

Proposed paragraph (i)(1)(ii) would have required that the employer have the examining physician or other licensed health care professional determine if affected employees are physically fit to wear respirators. OSHA has placed this requirement with the other respiratory protection provisions in paragraph (g) of this final rule.

Paragraph (j)(2) requires that employers offer examinations without cost to employees, at a reasonable time and place, and without loss of pay. OSHA believes that this provision is necessary to encourage employees to participate in the medical surveillance program. Final rule paragraph (j)(2), which is essentially identical to proposed paragraph (i)(2), is also consistent with other OSHA health standards and with provisions contained in the OSH Act.

Paragraph (j)(3) requires that all medical procedures be performed by or under the supervision of a physician or other licensed health care professional, defined as ''an individual whose legally permitted scope of practice (i.e., license, registration, or certification) allows him or her to independently provide or be delegated the responsibility to provide some or all of the health care services required by paragraph (j) of the standard.'' The proposal required that all medical procedures be performed only by or under the supervision of a physician. Only one commenter [Ex. 19–31] specifically supported this provision.

OSHA has long considered the issue of whether and how to identify the particular professionals who are to perform the medical surveillance required by its health standards. The Agency has determined that other professionals who are licensed under state laws to provide medical surveillance services would also be appropriate providers of such services for the purposes of the MC standard. The Agency recognizes that the personnel able to provide the required medical surveillance may vary from state to state, depending on state licensing laws. Under the final rule, an employer has the flexibility to retain the services of a range of qualified licensed health care professionals, thus potentially reducing costs, increasing flexibility, and allowing employers to identify those professionals, who may not necessarily be physicians, with the greatest expertise in diagnosing and treating occupational diseases. In future rulemakings, OSHA may attempt, with the cooperation of interested stakeholders, to specify which licensed health care professionals are the most appropriate to perform each of the diagnostic, therapeutic, medical management and other services required by the Agency's standards.

Paragraph (j)(4) of the final standard addresses when medical examinations and consultations are to be provided.

Initial surveillance. Under paragraph (j)(4)(i), initial medical surveillance must be provided before an employee's initial assignment to work in an area where they would be exposed to MC or by the start-up dates described in paragraph (n)(2)(iii) of the final MC standard, whichever is later. The employer need not repeat equivalent medical surveillance if it has already been provided within the past 12 months. OSHA's requirement for a preplacement examination is intended to determine if an individual is at increased risk of adverse effects from exposure to MC. It also establishes a general baseline for future reference. The provisions of final rule paragraph (j)(4) are effectively identical to those in proposed paragraph (i)(3), except that the proposed rule did not take into account medical surveillance provided prior to the effective date of this section. In the preamble to the NPRM (56 FR 57124), OSHA stated that it was considering a provision that would give employers credit for medical examinations provided within one year of the standard's effective date. The Agency requested comment on the usefulness of such a provision. Commenters [Exs. 19–31, 19–55b, 19–83] supported such a provision. In particular, Dow Chemical [Ex. 19–31] stated ''[i]f this is not done this section will be unfair to those employers who have on-going health surveillance programs.'' OSHA agrees with these commenters and has promulgated the final rule accordingly.

Periodic surveillance. Paragraph (j)(4)(ii) addresses periodic medical surveillance. OSHA proposed to require annual medical surveillance for all affected employees. In the final rule, this has been changed so that the employer is required to update the medical and work history for each affected employee every year but must only provide physical examinations on a schedule that varies with the age of the employee. For affected employees 45 years of age or older, the physical examination must be conducted every year. For employees less than 45 years of age, the examination need only be done every three years.

OSHA differentiated these groups of employees in an effort to target surveillance resources effectively. The probability of developing heart disease (which can be exacerbated by MC exposure) increases as employees age. Age 45 is a rough approximation of the point at which medical professionals would have heightened concern for cardiac effects. In other words, it is generally more likely that employees 45 years and older would experience the adverse cardiac effects of MC exposure. Three-year intervals between physical examinations for workers younger than 45 seemed the proper interval to balance the conservation of valuable medical resources and the provision of a medical surveillance program that is useful for detecting adverse MC health effects. The annual updates on medical and work history will enable the physician or other licensed health care professional to identify those individuals for whom more frequent examinations would be appropriate.

To a lesser extent, this would be true for the detection of MC-induced cancer as well. Although MC-induced cancer cannot currently be detected at the pre-neoplastic stage, early detection of cancer generally increases the survival rate, so it is important to include employees exposed to MC in a medical surveillance program that may detect tumors. Since any cancers caused by MC are more likely to be found in older employees and employees exposed to MC for longer durations, it is reasonable to concentrate medical surveillance resources on older employees.

The main goal of periodic medical surveillance for workers is to detect adverse health effects at an early, and potentially still reversible, stage. The intervals chosen based on the age of the employee are consistent with this purpose and with other OSHA health standards. The Agency believes that these periodic surveillance requirements strike a proper balance between the need to diagnose health effects, such as cancer, at an early stage, thus increasing the effectiveness of medical intervention, and the expectation that a limited number of cases will be identified through the surveillance program. This approach decreases the cost burden of surveillance by lengthening the period of time between examinations for younger employees who have fewer years of exposure and thus have a lower risk of adverse health effects.

Termination of employment or reassignment. Paragraph (j)(4)(iii) requires the employer to provide medical surveillance when an employee terminates employment or is reassigned to an area where exposure is consistently at or below the action level and the STEL. The termination examination need not be conducted if medical surveillance has been performed within the past six months. This requirement reduces the likelihood that an employee who terminates employment has an active, but undiagnosed, disease related to his or her MC exposure. In the NPRM, OSHA had proposed that the termination examination be performed unless medical surveillance had been conducted on that employee within the past three months. The Motor Vehicle Manufacturers Association [Ex. 19–42] requested that the exam should only be required if the employee has not had a medical exam within six months of termination or reassignment, instead of three months as had been proposed. The MVMA stated that ''six months is adequate and consistent with other OSHA health standards (Cadmium, Sec. 1910.1027(l)(8)). We see no contribution to reducing employee risk from examining such employees at an earlier date, especially since the exposure to methylene chloride has been removed.'' Upon reconsideration of the issue, OSHA has adopted this suggestion in the final rule.

The Agency requested public comment on whether continued annual surveillance should be offered to employees who have left employment, retired, or transferred to other areas within the employer's operations. Such an approach would be consistent with the requirement in the Benzene standard (29 CFR 1910.1028), which makes medical surveillance available to certain employees who have been exposed to benzene during their employment with their current employer. Several commenters [Exs. 19–31, 19–38, 19–42, 19–48, 19–55b, 19–58] stated that there should be no medical surveillance after an employee leaves a job in an exposure area or for employees previously exposed to MC. In particular, Dow Chemical [Ex. 19–31] stated: ''[W]e do not believe that the employer should be responsible for continued medical surveillance for employees who leave MC exposure areas * * *. [T]he continued surveillance does nothing more than divert occupational medical resources from more important work.'' Taking a different view, the IUE [Tr. 533, 9/18/92] testified that formerly exposed retirees should be included in the medical surveillance program. They also stated that retirees, presently employed workers formerly exposed to MC in previous jobs, and workers relocated to nonexposed areas should be included in the medical surveillance program. The ACTWU agreed, testifying [Tr. 1763–1764, 9/24/92] that employees who continue to work for the same employer after their exposure to MC is terminated should be entitled to participate in the medical surveillance program.

OSHA has decided that it would be inappropriate to include retirees and other formerly exposed employees in the medical surveillance program. A major value of medical surveillance is to detect the acute heart disease and CNS effects associated with MC exposure. Workers no longer exposed to MC, or retirees, would be at much less risk of experiencing these effects.

Additional surveillance. Paragraph (j)(4)(iv) requires employers to provide additional surveillance when the physician or other licensed health care professional recommends that it be provided. This may be warranted, for example, for an employee who is under 45 years of age but has a health condition that requires surveillance more frequently than every 3 years. Inclusion of this provision in the final rule will ensure that all employees receive the most appropriate level of surveillance for their particular health situation. The proposed provision was essentially identical.

Paragraph (j)(5) of the final rule, like paragraph (i)(4) of the proposal, establishes the requirements for the content of medical exams. This provision requires a comprehensive medical and work history, a physical examination, laboratory surveillance, and any additional information determined to be necessary by the physician or other licensed health care professional. The language in the proposed rule, which was similar, has been revised for clarity and to provide guidance about what constitutes adequate medical surveillance. For example, the final rule addresses medical and work history in greater detail than the proposal because, in some cases, three years may elapse before a subsequent physical examination is provided. On the other hand, the specific content of the physical examination and laboratory surveillance has been left largely to the discretion of the physician or other licensed health care professional.

Paragraph (j)(5)(i) requires that a comprehensive medical and work history be obtained from each participating employee. This paragraph requires a medical evaluation that includes a comprehensive medical and work history with special emphasis on neurological symptoms, skin conditions, history of hematologic or liver disease,

signs or symptoms suggestive of heart disease (angina, coronary artery disease), risk factors for heart disease, MC exposures, and the work practices and personal protective equipment used to control exposures. OSHA has included an example of a medical and work history format that would satisfy this requirement in non- mandatory Appendix B of the standard. The proposed provision required a comprehensive or interim medical and work history with emphasis on neurological symptoms, mental status, and cardiac health. Final rule paragraph (j)(5)(i) has been revised to indicate clearly what is required.

The medical and work history component of the initial medical evaluation will assist the physician or licensed health care professional in identifying pre-existing conditions that might place the employee at increased risk when exposed to MC. It also establishes a health baseline for future monitoring. The subsequent annual updates will identify changes in neurological symptoms, skin conditions or cardiac health, and, in combination with laboratory analyses and information on exposure history, may provide early warnings of MC toxicity. The information derived from a medical evaluation assists the physician or other licensed health care professional in distinguishing between MC-related effects and those effects that are unrelated to MC exposure. This information is particularly important because the health effects associated with MC exposure are not unique to such exposure. For example, the proposed requirement to assess mental health status has been eliminated from the final rule because no specific correlation has been demonstrated between mental health status and MC exposure.

Paragraph (j)(5)(ii) requires that the extent and nature of the required physical examinations be determined by the physician or licensed health care professional based on the health status of the employee and analysis of the medical and work history for that employee. The standard also requires that the examiner give particular attention to the lungs, cardiovascular system (including blood pressure and pulse), liver, nervous system and skin. Proposed paragraph (i)(4)(ii) specifically would have required that the examination address the lungs, liver, nervous system and breast. OSHA has determined that, in order to indicate clearly that the physician or licensed health care professional should assess the potential cardiac health impacts of MC, the medical exam should give attention to the cardiovascular system, blood pressure and pulse. In addition, the Agency has decided that, because of the skin irritation effects of MC, it is necessary to include evaluation of the skin in the medical exam.

Two hearing participants [Tr. 803, 9/18/92; Tr. 2434–35, 10/15/92] testified that men over 40 years old should be given electrocardiograms (ECGs), which should be repeated every 1 to 3 years. OSHA is not requiring ECGs because there is no evidence in the record that associates specific changes in ECGs with MC exposures. However, the physician or licensed health care professional has the discretion to order an ECG for any employee where it is deemed appropriate.

Proposed paragraph (i)(4)(iv) also required the physician to make a determination of any reproductive difficulties of the employee. Vulcan Chemicals [Ex. 19–48] and Organization Resources Counselors (ORC) [Ex. 19–51] commented that the evidence for a relationship between reproductive effects and MC exposure did not warrant inclusion of such a provision in the final rule. OSHA agrees with these commenters that the evidence associating MC exposure and specific reproductive health effects is sparse. Therefore, the Agency has not included reproductive effects in the list of effects the physician or other licensed health care professional should focus on. However, the Agency will continue to monitor the literature to determine if future evidence indicates that inclusion of this provision is warranted.

Two commenters [Exs. 19–28, 19–42] stated that the breast examination requirement should be eliminated from the final rule because breast exams would be highly unlikely to identify effects related to exposure to MC. In the proposal OSHA placed attention on the breast because of concern raised by the increased number of breast tumors in the rat bioassay. Upon further consideration, OSHA has dropped the requirement for breast exams. The Agency notes that rats are particularly sensitive to mammary tumors and it is unclear that humans have similar risks of developing breast cancer after exposure to MC. The Agency remains concerned about the potential for MC carcinogenicity evidenced by the rat mammary tumors, however, and has relied, in part, on mammary tumor data in identifying MC as a cancer hazard.

In final rule paragraph (j)(5)(iii), laboratory surveillance of employees is to be conducted as the examining physician or licensed health care professional determines to be necessary and appropriate, based on the employee's health status and the medical and work history. This is a more performance-oriented provision than the corresponding provision of the proposed rule. The proposal would have required several specific laboratory tests, while the final rule leaves laboratory test requirements to the discretion of the physician or other licensed health care professional. Non-mandatory Appendix B includes guidance regarding the types of tests that may be appropriate.

Some commenters [Exs. 19–28, 19–42, 19–48, 19–49] stated that COHb levels, which had been included among the tests in the NPRM, are not a good measure of toxic exposure to MC. In particular, the MVMA [Ex. 19–42] stated that it is difficult to determine the COHb level attributable to MC exposure for employees who are smokers or who may have other exposures to CO. Several other participants [Exs. 19–25, 19–57, 19–83 and Tr. 1438, 9/23/92] suggested that COHb testing should be done only after over-exposure to MC, such as after an emergency. The Laborers Health and Safety Fund [Tr. 1386, 9/23/92] testified,

> [W]e're not convinced that that's [COHb monitoring] an appropriate and accurate measure of exposures, given other sources of carbon monoxide on construction sites as well as the issue of smokers versus non-smokers.

However, the Department of the Army [Ex. 19–55b] suggested that COHb levels are a more cost-effective measurement of the oxygen-carrying capacity of blood than a complete blood count. Similarly, the California Department of Health Services [Ex. 19–17] requested that references to COHb testing be moved from the appendix to the regulatory text.

COHb levels greater than 3% can exacerbate angina symptoms, decrease exercise tolerance and increase risks for myocardial infarctions (heart attacks) in susceptible individuals. COHb concentrations can also be used as a rough estimate of worker exposure to MC (taking into consideration smoking behavior, time since exposure, and exposure to other CO sources) to calibrate personal MC monitoring measurements. Before- and after-shift COHb determinations can be useful in correlating recent MC exposures with COHb levels. The Agency is not requiring COHb testing, however, because confounding factors, such as smoking or exposure to a CO source, can reduce the usefulness of the results of the tests and, in addition, COHb does not measure a health effect per se but is instead a surrogate measure of MC exposure. However, COHb testing may

be clinically important in the evaluation of a symptomatic worker and therefore remains an option for the physician or other licensed health care professional to pursue. Exposure monitoring (see paragraph (d) of the final rule) must be performed to quantify an employee's exposure to MC.

In the comments received subsequent to publication of the ANPR for MC [Exs. 10–3, 10–10, 10–28], several industry commenters indicated that urine analysis, liver function tests and chest X-rays are commonly performed as part of the medical surveillance programs of these companies. OSHA believes that annual urine analysis or chest X-ray would not be relevant to detection of MC-related health effects. Liver function tests have also been evaluated for inclusion as a requirement in the medical surveillance provision. As discussed above in the Health Effects section, animal studies and human clinical studies show an association between chronic MC exposure and some changes in liver enzymes, particularly after high exposures or doses of MC for prolonged periods of time. The changes in liver enzyme levels after MC exposure are not consistent in the human clinical studies, however, and in general, changes in liver enzymes are not specific or unique to MC exposure. Therefore, the Agency believes that it should be left to the physician's or other licensed health care professional's discretion to determine if laboratory analysis of liver enzymes is warranted.

Several commenters [Exs. 19–11, 19–26, 19–42, 19–48, 19–55b] agreed that routine use of all of the tests included in the proposal would not be appropriate or necessary for the detection of MC-related health effects. The Agency also sought comments on the inclusion of other medical tests in the final MC rule. Two commenters [Exs. 19–31, 19–48] stated that a complete blood count was not necessary because the results of this test may not correlate with MC overexposure. In particular, the Dow Chemical Co. [Ex. 19–31] commented that a complete blood count is not necessary because blood cell volume and hemoglobin findings would suffice. OSHA has reevaluated the utility of the proposed tests and has decided that leaving laboratory surveillance to the discretion of the physician or licensed health care professional is more cost-effective than the approach taken in the proposal and will not negatively impact worker health.

In paragraph (j)(5)(iv), the final rule requires the medical surveillance program of the employer to include any other information or reports the physician or other licensed health care professional determines are necessary. This is to ensure that a complete medical profile is available to the physician or licensed health care professional to make decisions regarding the employee's health and exposure status. This provision is essentially identical to that proposed.

Paragraph (j)(6) of the final rule describes the required contents of emergency medical surveillance. The proposed rule did not specify what elements should be included in an emergency medical exam. The final rule clarifies that emergency medical surveillance should include any appropriate emergency treatment and decontamination of the exposed employee, a comprehensive physical exam, an updated medical and work history, and laboratory surveillance, if needed.

The Dow Chemical Company [Ex. 19–31] commented that employees exposed to MC during an emergency should not automatically be included in the regular medical surveillance program. Instead, this commenter argued that only those components of a medical examination that are appropriate in a given situation should be conducted. OSHA believes that it is important for an employer to provide medical examinations and appropriate follow-up to employees exposed to MC during an emergency. After considering the issue and comments raised during the rulemaking, the Agency agrees with Dow that employees exposed to MC during an emergency should not necessarily be enrolled in the continuing medical surveillance program provided to employees routinely exposed to MC. To that end, OSHA has added language to the final rule that clearly indicates what emergency medical surveillance is required. OSHA believes that final rule paragraph (j)(6) allows the employer appropriate flexibility, while at the same time ensuring that those employees exposed to MC during an emergency receive appropriate medical surveillance.

Paragraph (j)(7) requires the employer to provide medical surveillance services, in addition to those specified in final rule paragraphs (j)(5) and (j)(6), when the physician or other licensed health care professional determines that they are necessary. Compliance with this requirement will ensure that the information needed to evaluate the effects of MC exposure on employees is available. This provision is essentially the same as proposed paragraph (i)(5).

Paragraph (j)(8) requires that the employer provide the physician or other licensed health care professional with (1) a copy of the standard, including the relevant appendices; (2) a description of the affected employee's past, current, and anticipated future duties as they relate to the employee's MC exposure; (3) a description of former, current or anticipated exposure levels (including the frequency and exposure levels anticipated to be associated with emergencies), as applicable; (4) a description of any PPE that the employee must use or will use, such as respirators; and (5) information from any previous medical examinations that would not otherwise be available to the examining physician or other licensed health care professional. OSHA has determined that the physician or other licensed health care professional needs the above-listed background information in order to place the information derived from medical surveillance in the proper context. For example, a well-documented exposure history assists the physician or other licensed health care professional in determining whether an observed health condition may be related to MC exposure. It also helps this individual to determine if the results of medical surveillance indicate a need to limit an employee's occupational exposure to MC. This paragraph is essentially the same as proposed paragraph (i)(6).

Paragraph (j)(9) of the final rule requires employers to ensure that the examining physician or other licensed health care professional provides the employer and the affected employee with a written opinion that addresses (1) the physician's or other licensed health care professional's opinion as to whether the employee has any detected medical condition that would place the employee at increased risk of material health impairment as a result of exposure to MC; (2) any recommended limitations on the employee's exposure or use of personal protective clothing or equipment and respirators; (3) a statement that the employee has been informed of the potential carcinogenicity of MC, the risk factors for heart disease, and the potential for exacerbation of underlying heart disease associated with exposure to MC; and (4) a statement that the employee has been informed of the results of the medical examination and any medical conditions related to MC exposure that require further explanation or treatment.

The physician or other licensed health care professional must provide copies of the written medical opinion to the employee and the employer within 15 days after completion of the evaluation of medical and laboratory findings, but no later than 30 days after the medical examination. This

requirement was included to ensure that the employee and the employer have been informed of the above-mentioned results of the medical examination in a timely manner. This requirement differs slightly from that in proposed paragraph (i)(7)(i). Instead of the physician providing a copy of the written medical opinion to the employer, who then provides a copy to the employee, the final rule requires the physician or other licensed health care professional to supply a copy of the written medical opinion directly to both the employer and the employee. In addition, the time allowed for providing the opinion has been changed to recognize that time may be needed to receive and evaluate laboratory or other medical findings. The Agency believes that notifying both the employer and affected employees of the MC-related results of the medical surveillance at the same time is an efficient approach to disseminating this information to the appropriate parties. Providing copies of the same written opinion both to the employer and the employee ensures that the employer is aware of any factors that may influence work assignments or choice of personal protective equipment.

OSHA has added a requirement to the final rule that the physician or other licensed health care professional inform the employee of the carcinogenic and cardiac effects of MC to reinforce the information on MC's serious health effects that was transmitted during training. The Agency believes that this reinforcement will help to ensure that employees are aware of the potential effects of MC and take appropriate precautions when using this toxic substance.

OSHA received several comments on different aspects of paragraph (j)(9). For example, the UAW [Tr. 1884, 9/24/92] testified that the written opinion transmitted to the employer by the physician or other licensed health care professional should only state the limitations on the employee's exposure or use of respiratory or other personal protective equipment recommended by the physician or other health care professional, and should not include the medical or other reasons behind the recommended limitations.

OSHA agrees with the UAW that it is important to protect the privacy of employees enrolled in medical surveillance programs. Consequently, OSHA health standards have traditionally included a statement to the effect that no findings or diagnoses should be included in the physician's written opinion that are unrelated to occupational exposure. This requirement is intended both to protect the employee's privacy and to encourage employees to participate in the employer's medical surveillance program. The restriction on what may be revealed in the written opinion appears in the final rule as paragraph (j)(9)(ii), and is intended to apply to all of the information provided in the physician's or other licensed health care professional's written opinion, including that related to recommended limitations.

The MVMA [Ex. 19–42] and ORC [Ex. 19–57] stated that the proposed 15-day requirement for providing the employer with a copy of the written opinion should be 15 days from the physician's or other licensed health care professional's receipt of the test results rather than 15 days from the date of the examination. The Agency agrees and, as described above, has changed the requirement so that the written opinion must be provided within 15 days of completion of evaluation of medical findings, but not more than 30 days after the examination. OSHA believes that this strikes the proper balance between allowing sufficient time for the physician or other licensed health care professional to evaluate any laboratory findings while still providing the information to the employer and the employee in a timely manner.

Newport News Shipbuilding [Ex. 19–37] and the Shipbuilders Council of America [Ex. 19–56] stated that the written opinion should require only that employees be notified of abnormal test results, not normal results. In response to these comments, OSHA notes that such a provision would actually require many physicians and other licensed health care professionals to change their current practice because it would require them specifically to delete normal results from printouts of laboratory and other findings. Such reports routinely display all results, both normal and abnormal, for a given individual. In addition, OSHA believes that employees benefit from knowing which of their blood parameters and other test results are normal and which are abnormal. OSHA does not believe that requiring medical personnel to increase the amount of paperwork they perform is a good use of medical resources, and has therefore not revised the final rule to respond to these comments.

Under paragraph (j)(9)(ii) of the final rule, the physician or other licensed health care professional must exclude findings or diagnoses that are unrelated to MC exposure from the written opinion provided to the employer. As discussed above, OSHA has included this provision in the final rule to reassure employees participating in medical surveillance that they will not be penalized or embarrassed by the employer's obtaining information about them that is not directly pertinent to MC exposure. The above provisions are identical to those in proposed paragraph (i)(7)(ii). A note has been added to the final rule that states that the written opinion developed to comply with the MC standard may also contain information related to other OSHA standards. For example, an employer whose employees are enrolled in medical surveillance due to their exposure to benzene, formaldehyde *and* MC could receive a single, consolidated written opinion that addressed findings related to all three substances. This performance-oriented provision could result in reduced paperwork burdens for employers.

NPRM Issue 3 solicited input regarding whether the Agency should add a provision for Medical Removal Protection (MRP). Medical removal protection encourages employee participation in (and therefore increases the effectiveness of) the medical surveillance program by ensuring that reporting symptoms or health conditions to the physician or licensed health care professional will not result in loss of job or pay. Several rulemaking participants expressed support for the inclusion of MRP in the final rule [Exs. 19–23, 19–38; Tr. 1787, 9/24/92; Tr. 1802, 9/24/92; Tr. 1869, 9/24/92; and Tr. 1883, 9/24/92]. For example, the Amalgamated Clothing and Textile Workers (ACTWU) [Tr. 1793, 9/24/92] testified that OSHA should require MRP based on clinical judgment, as OSHA allowed in the final rule for formaldehyde (29 CFR 1910.1048). They also stated that they believed it was critical to have a medical removal protection provision in the MC standard in order to ensure worker participation. Mr. Frumin of the ACTWU testified as follows [Tr. 1792–1793, 9/24/92]:

> As I say, the problems that employers, physicians and, for that matter, OSHA confront in trying to assure the integrity of medical surveillance programs are not limited to a particular substance. They deal with the general perception—these problems arise from the general perception of workers, which is widespread through industry, that if they submit to a medical examination and it's not confidential, and employers could get the results of the medical findings, that health problems may result in some negative action.
>
> You have a symptom-based medical surveillance program, at least for the non-cancer effects. And if workers are supposed to report the types of symptoms, for instance, that Dr. Soden was looking for, shortness of breath, things of that nature—and they're

concerned that reporting that might involve some negative action against them: either their job security or their pay. You know, they will be discouraged from participating in medical surveillance, and the whole structure of the program is undermined. So the fact that these health effects are symptom-based rather than, say, based on laboratory tests alone, makes it all the more important to include medical removal protection and multiple physician review in the final rule.

Two commenters [Exs. 19–23, 19–38] suggested that MRP should be based on COHb levels. However, Dr. Mirer of the UAW [Tr. 1940, 9/24/92] disagreed with this idea and concurred with Mr. Frumin's remarks that medical removal protection should be based on symptoms and professional discretion. He stated,

* * * the guidance for the physicians, once the physician decides this employee is at increased risk, if they continue in this exposure and I want to remove him or her from the job, that's the trigger. At this moment, I would leave it that way. Increased carboxyhemoglobin is more an index of exposure than an adverse clinical effect, so I don't have any particular guidance. If the doctor wants to pull that man or woman out of a job, that's where I am now.

He continued,

* * * the other benefit of protecting the disclosure of symptoms is that it's going to identify sources of exposure, because one of the ways of determining exposure is by the presentation of symptoms. So the benefit of having them disclose symptoms is it will lead to lower exposure.

I can't think of anything much else that you would need to get out of MRP than improved participation, although at least our experience in lead is that MRP has been the driving force to reduce exposures independent of that.

OSHA considered the issues raised during the MC rulemaking and in general agrees with these worker representatives that MRP increases employee participation in medical surveillance. OSHA remains concerned about several issues, however. The Agency recognizes that employees may hesitate to participate in medical surveillance if they have reason to expect that the results may adversely affect them economically. However, OSHA has determined that there is no substantive guidance that it could give a physician or other licensed health care professional to indicate when it might be appropriate to remove an employee temporarily from the workplace, or what an appropriate trigger for return to work might be. Accordingly, OSHA has decided to promulgate the final rule for MC without including MRP provisions. The Agency will continue to monitor compliance with the medical surveillance and PPE provisions of this standard and the experience in industries subject to standards with medical removal protection provisions to determine whether any further action is warranted.

Paragraph (k) Hazard Communication

The requirements for hazard communication have been changed from proposed paragraph (j) (Communication of MC hazards to employees) and promulgated in paragraph (k) of the final rule. The paragraph addressing hazard communication in the final MC rule is consistent with the requirements of OSHA's Hazard Communication Standard (HCS). The HCS requires all chemical manufacturers and importers to assess the hazards of the chemicals they produce or import. It also requires all employers to provide information concerning the hazards of such chemicals to their employees. The transmittal of hazard information to employees is to be accomplished by such means as container labeling and other forms of warning, material safety data sheets and employee training.

Since the HCS ''is intended to address comprehensively the issue of evaluating the potential hazard of chemicals and communicating information concerning hazards and appropriate protective measures to employees'' (52 FR 31877), OSHA is including paragraph (k) in the final rule only to reference the HCS requirements for labels and material safety data sheets, and to indicate specifically the MC health effects that are required to be addressed under that rule. This additional guidance to employers simply reiterates the requirements of the HCS to convey information to affected employees about all health hazards to which they are potentially exposed. The health effects addressed by the final MC rule are cancer, cardiac effects (including elevation of carboxyhemoglobin), central nervous system effects, and skin and eye irritation. There may also be other health hazards or physical hazards associated with MC that meet the definitions of coverage under the HCS. These should be addressed appropriately on the label and MSDS as well.

Employers who have already met their longstanding requirements to comply with the HCS will have no additional duties with regard to labels and MSDSs under the MC final rule. This is consistent with the suggestions of some commenters that no requirements should be mandated beyond those listed in the HCS [Exs. 19–25, 19–31, 19–42]. OSHA agrees that the HCS addresses the issue comprehensively, and additional requirements are not necessary to protect MC-exposed employees specifically. As a result, the Agency has deleted the proposed requirement for warning signs. Such signs are not required under the HCS, although they may be useful in some situations and employers may choose to use them. The Organization Resources Counselors [Ex. 19–57] commented that the required signs should say ''warning'' and not ''danger'' as proposed, and suggested consistency with the benzene and ethylene oxide standards. It should be noted that the terms ''warning'' and ''danger'' have specific meaning in the context of labels, and there are criteria for their application under voluntary consensus standards such as the ANSI Z129.1 standard for precautionary labeling. ORC's comment is otherwise moot at this point since the relevant requirement has been deleted.

Paragraph (l) Employee Information and Training

The requirements for employee information and training, which were part of proposed paragraph (j) (Communication of MC hazards to employees), have been separated from the hazard communication requirements for labels and data sheets described above, and promulgated as paragraph (l) in the final MC rule. Some of the training provisions that were proposed duplicated requirements of the HCS. These have been removed, and a reference to the information and training required under the HCS has been added to simply remind employers of their longstanding obligations under that rule to ensure that employees are apprised of the hazards of the chemicals in their workplaces, as well as appropriate protective measures. The information and training requirements in the final MC rule build upon those requirements with additional information specific to MC that will help employees understand the risks of exposure and the means to prevent adverse health effects from occurring in their particular workplaces.

It should be noted that the information and training requirements in the final rule have been separated from each other rather than being addressed together, because they deal with different ways of conveying information. ''Information'' transmittal is simply that—a passive process of making information available to employees should they choose to use it. In some cases, this may be done in writing or some other simple manner of information transfer. ''Training,'' on the other hand, is not a passive process. The

information provided to employees in training requires them to comprehend it and subsequently to use it in the performance of their duties in the workplace. There are many different ways to accomplish training effectively, but it cannot be a simple transfer of information such as handing someone a written document. OSHA's voluntary training guidelines, which are found in OSHA Publication No. 2252, are available to provide employers additional guidance in setting up and implementing an appropriate employee training program. An effective training program is a critical component of any safety and health program in the workplace. Workers who are fully informed and engaged in the protective measures established by the employer will play a significant role in the prevention of adverse health effects. Ineffective training will not serve the purpose of making workers full participants in the program, and the likelihood of a successful program for safety and health in the absence of an effectively trained workforce is remote.

Paragraph (l)(1) requires employers to provide all employees who are potentially exposed to MC with information and training on MC prior to or at the time of initial assignment to a job involving MC exposure. Thus employees will have the information they need to protect themselves before they are actually subject to exposure. The final rule further indicates in paragraph (l)(2) that employers shall ensure that the information and training is presented in a manner that is understandable to employees and that employees have received the information and training required under the HCS.

Paragraph (l)(3) addresses the information to be provided to affected employees. This includes the requirements of the final MC standard and information available in its appendices, as well as how the employee can access or obtain a copy of it in the workplace. This will ensure that MC-exposed employees are aware that specific requirements have been established to protect them from adverse health effects, and give them an opportunity to review those requirements themselves if they so desire. Wherever employee exposures exceed or can reasonably be expected to exceed the action level, the employer is required to inform employees about the location of MC in the workplace, what operations may be affected, particularly noting where in the workplace there may be exposures above the permissible exposure limits.

Paragraph (l)(4) requires each employer to train each affected employee as required under the Hazard Communication Standard (29 CFR 1910.1200, 29 CFR 1915.1200 or 29 CFR 1926.59, as appropiate). This provision simply reminds employers of their obligation to train employees regarding the hazards of MC under the Hazard Communication Standard.

The final rule does not provide a specific time period for updating the training, whereas the proposed standard included a requirement for annual retraining. Instead, the final rule indicates in paragraph (l)(5) that the employer shall re-train each affected employee as necessary to ensure that employees exposed above the action level or the STEL maintain a good understanding of the principles of safe use and handling of MC in the workplace. Employers can assess whether this understanding is generally present in exposed employees in various ways, such as by observing their actions in the workplace. For example, if an employee is not using appropriate protective equipment or following safe work practices routinely, this may be an indication that additional training is required. This provision of the final rule is a performance-oriented requirement that allows each employer to determine how much or how often training is needed.

Paragraph (l)(6) requires that the employer do additional training when the workplace is modified or changed in such a way that employees are subject to greater exposures and those exposures exceed or can reasonably be expected to exceed the action level and those employees need information and training to understand how to implement the modifications or training successfully. This provision was not in the proposal, but the Agency considers it necessary to further protect employees from the hazards of MC when significant changes in workplace conditions occur.

Paragraph (l)(7) requires the employer whose employees are exposed to MC at a multi-employer worksite to notify the other employers with work operations at that site regarding the use of MC-containing materials, the hazards associated with the use of those materials and the control measures implemented to protect affected employees from MC exposure, in accordance with the requirements of the Hazard Communication Standard (HCS). The HCS addresses sharing information at multi-employer worksites, and since this final rule covers construction where most of the sites are multi-employer, this provision was added to remind such employers of these requirements. OSHA is also aware that an increasing number of manufacturing worksites involve more than one employer.

In paragraph (l)(8) of the final rule, OSHA has indicated that the Assistant Secretary or the Director may access all materials relating to employee information and training in the workplace. This would be done in conjunction with an inspection to ascertain compliance with the rule, or in the event of a NIOSH health hazard evaluation. Review of the available materials regarding information and training will help assess whether the program has been properly conducted, as well as evaluate what could be improved if employees do not appear to be effectively trained.

The information and training provisions of this standard are performance-oriented, because employees are exposed to MC in a wide variety of circumstances and the best method of conveying the necessary data may vary from site-to-site. The standard lists the categories of information to be transmitted to employees but does not specify the ways in which it is to be transmitted.

Some commenters [Tr. 531–32, 9/18/92; Tr. 545–49, 9/18/92; Tr. 828–32, 9/21/92; Tr. 1380, 1384–85, 9/23/92] suggested that OSHA make the proposed training provisions more specific, such as by including requirements for length of training, qualifications of instructors, or requirements for interactive training. In addition, hearing participants and commenters suggested that OSHA require employers to monitor the effectiveness of training [Ex. 19–38, Tr. 531–32, 9/18/92]. These participants suggested that provisions be made, as well, for training of workers in languages other than English and for training of workers with limited literacy [Ex. 19–38, Tr. 531–32, 9/18/92; Tr. 831–32, 9/21/92].

The International Brotherhood of Painters and Allied Trades, AFL-CIO, testified [Tr. 830–831, 9/21/92]:

> We urge OSHA to promulgate a standard that requires that workers receive a minimum of 16 hours training. Such training would include at the minimum information on the hazards of methylene chloride and how it harms the body. Engineering controls that can be implemented in the field should be described and demonstrated. We will submit information on one such control to the record. Training should also include information on work practices associated with specific job assignments, methods by which workers can protect themselves, the limits of respirators use, appropriate procedures for work in confined spaces, employee rights under the standard, the

purpose of medical surveillance and other elements of training as enumerated in Section (j)(4).

OSHA does not agree that specifying a time frame for training ensures that it will be complete, appropriate, or effective. The amount of training required will depend to a large extent on the conditions of use in a given workplace. It will also be related to the extent of training on MC that has already been done by the employer under the HCS. Therefore, the final rule provisions remain performance-oriented with regard to the time needed to convey the information and training.

With regard to the issues of literacy and language, these remain a significant consideration in the proper design and implementation of any training program. Because working safely with MC is such a significant concern, the employer must make every effort to ensure that the training is presented in such a way that employees can understand and act on the information.

OSHA expects that employers will ensure that the information and training is effective. Any good training program should include an evaluation component to help ensure effectiveness. The voluntary training guidelines previously recommended can provide additional guidance in this respect.

OSHA received comments that indicated that the MC standard should simply refer to the HCS rather than having separate requirements [Exs. 19–25; 19–49]. While the Agency agrees with these comments in reference to the label and MSDS requirements, it does not appear that this is the appropriate approach to training. While the HCS addresses training about the hazards of a chemical and appropriate precautionary measures, there are other items of training that are specific to the MC standard requirements and the determinations made in this rulemaking regarding MC. As such, it is important to ensure that the already-required HCS training is supplemented with information and training specific to MC.

Paragraph (m) Recordkeeping

Paragraph (m) of the final rule addresses requirements for employers to create and maintain records of their compliance with some of the provisions of this section. Section 8(c)(1) of the OSH Act authorizes the Agency to promulgate regulations requiring employers to keep necessary and appropriate records regarding activities to permit the enforcement of the Act or to develop information regarding the causes and prevention of occupational accidents and illnesses. Section 8(c)(3) of the Act specifically addresses the promulgation of ''regulations requiring employers to maintain accurate records of employee exposures to potentially toxic materials or harmful physical agents which are required to be monitored or measured under section 6.''

Paragraph (m)(1) requires that employers who rely on objective data to characterize potential exposures to MC, rather than conducting initial monitoring under paragraph (d) of this section, maintain records that show the information and methodology used in reaching their conclusion that exposures are at or below the action level and no additional monitoring is required. The record must include the MC-containing material evaluated; the source of the objective data; the testing protocol, and the results or analysis of the testing; a description of the operation(s) exempted from monitoring, and how the data support the exemption; and other relevant data.

Since the use of objective data exempts the employer from conducting monitoring, as well as establishing that most of the other provisions need not be complied with due to the low level of potential exposure, it is critical that this determination be carefully documented. Compliance with the requirement to maintain a record of objective data protects the employer at later dates from the contention that initial monitoring was improperly omitted. The record will also be available to employees so that they can examine the determination made by the employer. The employer is required to maintain the record for the duration of the employer's reliance upon objective data. This provision is effectively identical to proposed paragraph (k)(1).

Paragraph (m)(2) requires that employers establish and keep an accurate record of all measurements taken to monitor employee exposure to MC. For employers with 20 or more employees, the record must include at least: the date of measurement for each sample taken; the operation involving exposure to MC which is being monitored; sampling and analytical methods used and evidence of their accuracy; number, duration and results of samples taken; the type of personal protective equipment, such as respiratory protective devices worn (if any); and name, social security number, and job classification and exposure of all the employees deemed to be represented by such monitoring, indicating which employees were actually monitored. For employers with fewer than 20 employees, the record shall include, at a minimum: the date of measurement for each sample; the number, duration and results of samples taken; and name, social security number, job classification and exposure of all the employees deemed to be represented by such monitoring, indicating which employees were actually monitored. OSHA believes it is necessary to maintain these records so that employers, employees and OSHA can determine the extent to which MC exposure has been identified and subsequently controlled. Over time, the exposure records can help determine if additional measures are needed for employee protection. OSHA has reduced the amount of information required for small businesses in recognition of the more limited variety of operations and exposure levels there. This should ease these employers' recordkeeping burden without compromising employee safety and health in these types of facilities.

Two commenters [Exs. 19–25, 19–49] suggested that such documentation should only be required for each person actually monitored (paragraph (d)(1) provides for representative monitoring). However, OSHA believes that it is necessary for records to be kept for each employee represented by the exposure monitoring so that individual employees can access information that characterizes their own exposures to MC. If records were kept only for those actually monitored, it would be unreasonably difficult for an employee to identify the exposure measurement that is intended to represent his or her experience. Accordingly, OSHA has not made the suggested change.

Paragraph (m)(3) requires that the employer keep accurate medical records for each employee subject to medical surveillance. The information to be included in the record addresses identification of the employee; the physician's or other licensed health care professional's written opinions; and documentation of any employee medical conditions that are found to be related to MC exposure. Maintenance of employee medical records is necessary for the proper evaluation of the employee's health, as well as for appropriate followup.

Proposed paragraph (k)(3)(ii)(D) required that a copy of the information provided to the physician or other licensed health care professional be included in the employee record. The Dow Chemical Company [Ex. 19–31] requested that, because many larger companies have company medical facilities, some provision be made so that records do not have to be maintained in medical department records and duplicated in the personnel record of every employee potentially

exposed to MC. The information required under paragraph (j)(8) of this section includes a copy of this section including its appendices, a description of duties involving MC exposure, exposure levels, personal protective equipment, and previous medical surveillance information. Since this information is available to the employee through other means, OSHA believes that the requirements under proposed paragraph (k)(3)(ii)(D) were unnecessarily burdensome, and OSHA has therefore deleted this paragraph from the final rule. OSHA has also deleted proposed requirements for maintaining records of employee fit testing as being unnecessarily burdensome. Dow also suggested that an employee identification number be permitted in lieu of social security number [Ex. 19–31]. OSHA does not agree with this suggestion. Social security numbers have much wider application, and are correlated to employee identity in other types of records. These numbers are a more useful differentiation among employees since each number is unique to an individual for a lifetime and does not change as an employee changes employers.

Paragraph (m)(4) of the final rule specifies that access to exposure and medical records by employees, employees'' designated representatives, NIOSH and OSHA shall be provided in accordance with 29 CFR 1910.1020. OSHA promulgated 29 CFR 1910.1020 as the generic rule for access to employee exposure and medical records on May 23, 1980 (45 FR 35212). It applies to records created under specific OSHA standards and to records that are voluntarily created by employers. OSHA retains unrestricted access to medical and exposure records but its access to personally identifiable records is subject to the Agency's rules of practice and procedure concerning OSHA access to employee medical records, which have been published at 29 CFR 1913.10.

The time periods required for retention of exposure records and medical records is thirty years and the period of employment plus thirty years, respectively. These retention requirements are consistent with those in the OSHA records access standard and with pertinent sections of the Toxic Substances Control Act. It is necessary to keep records for extended periods of time because of the long latency periods commonly observed for the induction of cancer caused by exposures to carcinogens. Cancer often cannot be detected until 20 or more years after onset of exposure. The extended record retention period is therefore needed for two purposes. First, possession of past and present exposure data and medical records furthers the diagnosis of workers' ailments. In addition, retaining records for extended periods makes possible a review at some future date of the effectiveness and adequacy of the standard.

Paragraph (m)(5) requires employers to comply with the requirements of 29 CFR 1910.1020(h). That provision requires the employer to notify the Director of NIOSH in writing at least 90 days prior to the disposal of records and to transfer those records to NIOSH unless told not to do so by NIOSH. The employer is required to comply with any other applicable requirements set forth in the records retention standard.

Paragraph (n) Dates

This paragraph establishes the effective date for the MC final rule, and the start-up dates for the various provisions of the standard. The start-up dates allow employers additional time to comply with some of the provisions of the standard that require more effort to accomplish. It is expected that such work will commence by the effective date, and be completed as soon as possible but in no case later than the compliance deadline established by the effective date. All other obligations imposed by the standard become effective on the effective date unless otherwise indicated.

Paragraph (n)(1) of the final rule provides that this standard will become effective on April 10, 1997. This date is 90 days from the date of publication in the Federal Register. Proposed paragraph (m)(1) had provided that the final rule would become effective 60 days after publication in the Federal Register. OSHA stated in the preamble to the proposed rule [56 FR 57128] that the proposed effective date, in conjunction with the proposed start-up dates, would allow sufficient time for employers to achieve compliance with the substantive requirements of the proposed rule.

Although no commenters directly addressed the 60-day period proposed in paragraph (m)(1), several commenters addressed the reasonableness of the start-up dates in proposed paragraph (m)(2). Those comments, discussed below, indicated that some employers would need more time to comply than the proposed rule would have allowed.

The Agency sets the effective date to allow sufficient time for employers to obtain the standard, read and understand its requirements, and undertake the necessary planning and preparation for compliance. Section 6(b)(4) of the OSHA Act provides that the effective date of an OSHA standard may be delayed for up to 90 days from the date of publication in the Federal Register. Given the concerns expressed by commenters, OSHA's interest in having employers implement effective compliance efforts, and the minimal effect of the additional 30 day delay, the Agency has decided that it is appropriate to set the effective date at 90 days from publication, rather than at 60 days.

Paragraph (n)(2) of the final rule establishes the start-up dates for compliance with the provisions of the MC standard. The start-up dates are based on information in the record about the state of the art with regard to the types of provisions employers are expected to implement, such as available control measures, their complexity, and the time that is reasonably necessary to complete their installation and implementation. In the case of MC, the types of provisions included in the rule, such as requirements that will require conventional controls, are identical to the elements included in all OSHA health standards.

Proposed paragraphs (m)(2)(i), (ii) and (iii) required that initial monitoring be completed by all employers within 120 days of the effective date of the MC standard, engineering controls within one year of the effective date and all other requirements within 180 days of the effective date. As described below, OSHA received numerous comments on the appropriateness of the start-up dates, especially for small businesses. Given the large number of small employers covered by the requirements, and the special problems of many of those employers in identifying and implementing appropriate control measures, OSHA has decided to phase-in compliance and to permit these employers a longer time period in which to comply with the requirements of the standard. The schedule for compliance with the provisions of the standard are described below.

OSHA received a number of comments on the proposed periods for compliance with the control requirements. In 1992, Kodak [Exs. 19–18 and 19–102] described circumstances at its film base production facility that would prevent compliance with the PELs through engineering controls before mid-1995. Kodak stated ''[it] is essential that OSHA be responsive to these considerations in promulgating the final rule. OSHA should permit adequate time for Kodak to implement feasible engineering controls in an orderly and minimally disruptive schedule.'' Considering the effective

date and start-up dates in this regulation, OSHA has determined that affected parties will have sufficient time to comply with the standard.

Similar requests for longer time periods for compliance were also received from a variety of other commenters [Exs. 19–55, 19–57, 19–67, 19–72, 19–75, 115–3, 115–28, 115–33, 115–37, Tr. 1422, 1427–29, 9/23/92, Tr. 2103, 10/14/92, Tr. 2291–92, 2300, 10/15/92]. However, OSHA's Final Economic Analysis for this rulemaking indicates that readily available control measures can be used to control exposure in many of the operations where MC is present. In general, compliance will not require the development of new or novel control technology. Accordingly, OSHA believes that more extended time periods for compliance are not necessary for all affected industries. However, as discussed below, small businesses (for example, those with fewer than 20 employees and polyurethane foam manufacturers with 20 to 99 employees) have been granted additional time to comply.

As discussed above in Section VIII, several commenters [Exs. 19–14, 19–25, 19–28 and 19–29] stated that engineering controls to achieve compliance were not available. These commenters further stated that the development and implementation of the process changes and engineering controls needed to achieve compliance would take four years from the effective date, not the single year proposed. For example, the Pharmaceutical Manufacturers Association and Abbott Laboratories [Exs. 19–25 and 19–29] stated as follows:

> [I]f the agency should rule that the exposure level to MC be reduced to 25 ppm for an 8-hour TWA and a 125 ppm STEL, a minimum of 1 year from the effective date must be allowed for identification of the engineering controls. A minimum of 3 years from the effective date must be allowed for compliance with paragraph (f)(1) of the proposed rule.

Those commenters and the HSIA [Ex. 19–45] also indicated that FDA approval is needed in the pharmaceutical industry for any alteration of manufacturing processes, substitution for MC, or modification of work practices to achieve compliance with OSHA's MC standard, and requested that OSHA consider the FDA's regulatory requirements when establishing start-up dates. In particular, Abbott Laboratories described how it took three years to obtain FDA approval for the substitution of hydroalcoholic or aqueous solutions for MC in tablet coating operations, stating ''[p]resently, completion of required testing and obtaining FDA approval for production of a single product can take 3 months to three years, depending upon the extent of the change.''

Abbott also commented as follows [Ex. 19–29]:

> As stated previously, feasible engineering controls do not exist for the present bulk pharmaceutical centrifugal separation and drying equipment. Implementation of engineering controls would therefore require the use of a different process or a different production method. Changes of that degree require Abbott Laboratories to complete development work on an alternative process and/or identify new production equipment; erect a building to house the equipment; purchase, receive and install the equipment; train employees; and validate the process. This cannot be accomplished in one year.

OSHA is aware that pharmaceutical manufacturers must comply with other regulatory requirements, including those set by the FDA. The Agency has considered how affected employers, in general, need to coordinate their OSHA compliance efforts with their other regulatory compliance activities, that this regulation does not require implementation of particularly complicated or novel control technologies, and that the compliance time frames are in keeping with those in other OSHA standards. OSHA views the coordination of OSHA compliance with other regulatory compliance activities as an ongoing employer effort, not just an ad hoc response to a particular OSHA action (such as the revision of a PEL). For example, a pharmaceutical manufacturer would need to consider the implications for OSHA compliance of process changes undertaken due to FDA requirements or for other reasons, whether those changes were to be made during the MC standard's ''start-up'' period or subsequently.

Accordingly, the Agency has determined that the commenters have not established a need for the requested extension of the start-up dates. OSHA believes that the proposed one-year period in which to implement controls will, in general, be adequate and, therefore, has not made the suggested change. However, as discussed elsewhere, OSHA has tailored the compliance schedule to the size of the establishment and anticipated impact of the standard on those businesses.

Dow [Ex. 19–31] also expressed concern that many employers would be unable to meet the start-up dates, focusing on the time and resources that would be required to conduct initial monitoring. In addition, Dow stated as follows ''OSHA should require that certain actions be completed within the stated time periods and that if the actions can not be completed, the employer should have a written plan and corresponding actions to show a good faith effort to meet the requirements.'' OSHA agrees that there may be circumstances where, despite good faith efforts, employers cannot achieve compliance within the time periods specified by paragraph (n)(2). OSHA further agrees that developing a written plan and taking other ''good faith'' actions towards compliance would be appropriate measures to mitigate any circumstances of non-compliance with the regulation. Indeed, the suggested procedure closely resembles the temporary variance process already established by OSHA.

Under section 6(b)(6) of the OSH Act, an employer can obtain a temporary variance from compliance with an OSHA standard if it shows that it cannot achieve compliance by the effective date; is taking all available steps to safeguard its employees from the pertinent hazard; and has an effective program for coming into compliance with the standard. The implementing regulations for the temporary variance process appear at 29 CFR part 1905. Employers who experience difficulties in meeting the start-up dates should contact OSHA and apply for a temporary variance.

The HSIA [Ex. 19–45] recommended that OSHA ''provide a compliance schedule similar to that provided in the generic PEL update * * * [which] in some circumstances allows employers until December 31, 1993 to comply (a total of 4 years and 10 months).'' In addition to mentioning the lengthy FDA approval process, the HSIA noted that ''DCM users, particularly many of the smaller companies, will find compliance technologically and economically difficult at best.''

As stated above, OSHA believes that the sort of extended compliance schedule set through the generic PEL update is unnecessary for the MC standard. Based on its review of the rulemaking record, the Agency has reached the general conclusion that employers will be able to achieve compliance within the time frames established in paragraph (n).

However, OSHA is concerned that some small facilities affected by this rulemaking, such as many of those in the furniture refinishing industry and the polyurethane foam manufacturing industry, may have difficulties determining the appropriate control measures to use and also may not be able to absorb the costs of compliance, particularly those associated with implementing the appropriate

engineering controls within the time frames initially proposed. The Agency has estimated (see Section VIII, Summary of the Final Economic Analysis) that allowing a variable schedule of compliance, based upon size of establishment, will enable firms in all impacted sectors to absorb many of the compliance costs without endangering their financial health.

Based on these considerations, OSHA has determined that the following implementation schedule is reasonable and appropriate for businesses of all sizes:

Establishment size	Initial monitoring provisions must be complied with within	Implementation of engineering controls must be completed within	All other provisions must be complied with within
Fewer than 20 employees	300 days of the effective date	3 years of the effective date	1 year of the effective date.
Polyurethane foam manufacturers with 20 to 99 employees.	210 days of the effective date	2 years of the effective date	270 days of the effective date.
All other employers	120 days of the effective date	1 year of the effective date	180 days of the effective date.

The Agency is promulgating paragraph (n) accordingly.

The schedule of intermediate start-up dates (210 d, 270 d and 2 years) for polyurethane foam manufacturers with 20 to 99 employees was limited to this application group because this group has the highest potential economic impacts except for the furniture stripping and construction groups. In both of the latter groups, most firms have fewer than 20 employees, and thus would already be allowed additional time to comply with the final rule's start-up dates. In contrast, in the flexible polyurethane foam manufacturing group, even firms with fewer than 100 employees will need to install several types of engineering controls and are likely to have unusually high capital expenditures in order to meet the requirements of the regulation. This extension of compliance deadlines will allow those firms that need extensive engineering controls time to adequately plan for and implement their system of controls. This modification will thus also help to ensure adequate protection for workers.

Paragraph (o) Appendices

The final paragraph of the standard simply states that the appendices which follow are not intended to create any additional obligations beyond those already specified in the standard. They are basically intended as non-mandatory guidance documents to supplement and complement the regulatory requirements in the standard, and to provide additional information about MC and its safe handling and use to exposed employees, employers, and health care professionals.

A few comments were received by OSHA regarding the text of the appendices as proposed. These addressed the need for additional information [Ex. 57, Tr. 832, 9/21/92, Tr. 1380 and 1384–85, 9/23/92], or whether information should appear in an appendix or in the regulatory text itself [see, e.g., Tr. 2435–36 and 2448–49, 10/15/92]. OSHA has reviewed and updated the text in the appendices to address these comments and ensure that they are consistent with the new regulatory text in the final standard.

Also, proposed Non-mandatory Appendix C, which addressed respirator fit testing, has not been included in the final rule, because OSHA has determined that very few of the respirators used to comply with this standard will require fit testing. In addition, OSHA's revision of the generic respirator standard (29 CFR 1910.134) will contain an up-to-date appendix that addresses fit testing for all respirators.

XI. Authority and Signature

This document was prepared under the direction of Joseph A. Dear, Assistant Secretary of Labor for Occupational Safety and Health, U.S. Department of Labor, 200 Constitution Avenue, NW., Washington, DC 20210.

Pursuant to sections 4, 6(b), 8(c) and 8(g) of the Occupational Safety and Health Act (29 U.S.C. 653, 655, 657), section 107 of the Contract Work Hours and Safety Standards Act (the Construction Safety Act) (40 U.S.C. 333); the Longshore and Harbor Workers' Compensation Act (33 U.S.C. 941); the Secretary of Labor's Order No. 1–90 (55 FR 9033); and 29 CFR part 1911; 29 CFR parts 1910, 1915 and 1926 are amended as set forth below.

List of Subjects in 29 CFR Part 1910, 1915 and 1926

Chemicals, Cancer, Health risk-assessment, Methylene chloride, Occupational safety and health.

Signed at Washington, D.C., this 31st day of December 1996.

Joseph A. Dear,

Assistant Secretary of Labor.

XII. Final Standard Regulatory Text

Parts 1910, 1915, and 1926 of Title 29 of the Code of Federal Regulations are amended as follows:

PART 1910—[AMENDED]

Subpart B—[Amended]

1. The authority citation for subpart B of part 1910 continues to read as follows:

Authority: Secs. 4, 6 and 8 of the Occupational Safety and Health Act, 29 U.S.C. 653, 655, 657; Walsh-Healey Act, 29 U.S.C. 35 *et seq*; Service Contract Act of 1965, 41 U.S.C. 351 *et seq*; Contract Work Hours and Safety Standards Act (Construction Safety Act), 40 U.S.C. 333; Sec 41 Longshore and Harbor Worker's Compensation Act, 33 U.S.C. 941; National Foundation on Arts and Humanities, 20 U.S.C. 951 *et seq*; Secretary of Labor's Order No, 12–71 (36 FR 8754); 8–76 (41 FR 25059); 9–83 (48 FR 35736); 1–90 (55 FR 9033); and 29 CFR part 1911.

2. By adding a new paragraph (m) to §1910.19 to read as follows:

§ 1910.19 Special provisions for air contaminants.

* * * * *

(m) *Methylene Chloride (MC):* Section 1910.1052 shall apply to the exposure of every employee to MC in every employment and place of employment covered by §1910.16 in lieu of any different standard on exposure to MC which would otherwise be applicable by virtue of that section when it is not present in sealed, intact containers.

Subpart Z—[Amended]

3. The authority citation for subpart Z of 29 CFR part 1910 continues to read, in part, as follows:

Authority: Secs. 6 and 8 Occupational Safety and Health Act, 29 U.S.C. 655, 657; Secretary of Labor's Orders 12–71 (36 FR 8754), 8–76 (41 FR 25059), 9–83 (48 FR 35736) or 1–90 (55 FR 9033), as applicable; and 29 CFR part 1911.

* * * * *

§ 1910.1000 [Amended]

4. By removing the entire entry for Methylene Chloride (Z37.23–1969) in Table Z-2 of § 1910.1000 and adding the

following entry in its place in the substance column: ''Methylene chloride: see § 1910.1052''.

5. By adding a new § 1910.1052 to read as follows:

§ 1910.1052 Methylene Chloride.

This occupational health standard establishes requirements for employers to control occupational exposure to methylene chloride (MC). Employees exposed to MC are at increased risk of developing cancer, adverse effects on the heart, central nervous system and liver, and skin or eye irritation. Exposure may occur through inhalation, by absorption through the skin, or through contact with the skin. MC is a solvent which is used in many different types of work activities, such as paint stripping, polyurethane foam manufacturing, and cleaning and degreasing. Under the requirements of paragraph (d) of this section, each covered employer must make an initial determination of each employee's exposure to MC. If the employer determines that employees are exposed below the action level, the only other provisions of this section that apply are that a record must be made of the determination, the employees must receive information and training under paragraph (l) of this section and, where appropriate, employees must be protected from contact with liquid MC under paragraph (h) of this section. The provisions of the MC standard are as follows:

(a) *Scope and application.* This section applies to all occupational exposures to methylene chloride (MC), Chemical Abstracts Service Registry Number 75–09–2, in general industry, construction and shipyard employment.

(b) *Definitions.* For the purposes of this section, the following definitions shall apply:

Action level means a concentration of airborne MC of 12.5 parts per million (ppm) calculated as an eight (8)-hour time-weighted average (TWA).

Assistant Secretary means the Assistant Secretary of Labor for Occupational Safety and Health, U.S. Department of Labor, or designee.

Authorized person means any person specifically authorized by the employer and required by work duties to be present in regulated areas, or any person entering such an area as a designated representative of employees for the purpose of exercising the right to observe monitoring and measuring procedures under paragraph (d) of this section, or any other person authorized by the OSH Act or regulations issued under the Act.

Director means the Director of the National Institute for Occupational Safety and Health, U.S. Department of Health and Human Services, or designee.

Emergency means any occurrence, such as, but not limited to, equipment failure, rupture of containers, or failure of control equipment, which results, or is likely to result in an uncontrolled release of MC. If an incidental release of MC can be controlled by employees such as maintenance personnel at the time of release and in accordance with the leak/spill provisions required by paragraph (f) of this section, it is not considered an emergency as defined by this standard.

Employee exposure means exposure to airborne MC which occurs or would occur if the employee were not using respiratory protection.

Methylene chloride (MC) means an organic compound with chemical formula, CH_2Cl_2. Its Chemical Abstracts Service Registry Number is 75–09–2. Its molecular weight is 84.9 g/mole.

Physician or other licensed health care professional is an individual whose legally permitted scope of practice (i.e., license, registration, or certification) allows him or her to independently provide or be delegated the responsibility to provide some or all of the health care services required by paragraph (j) of this section.

Regulated area means an area, demarcated by the employer, where an employee's exposure to airborne concentrations of MC exceeds or can reasonably be expected to exceed either the 8-hour TWA PEL or the STEL.

Symptom means central nervous system effects such as headaches, disorientation, dizziness, fatigue, and decreased attention span; skin effects such as chapping, erythema, cracked skin, or skin burns; and cardiac effects such as chest pain or shortness of breath.

This section means this methylene chloride standard.

(c) *Permissible exposure limits (PELs).* (1) *Eight-hour time-weighted average (TWA) PEL.* The employer shall ensure that no employee is exposed to an airborne concentration of MC in excess of twenty-five parts of MC per million parts of air (25 ppm) as an 8-hour TWA.

(2) *Short-term exposure limit (STEL).* The employer shall ensure that no employee is exposed to an airborne concentration of MC in excess of one hundred and twenty-five parts of MC per million parts of air (125 ppm) as determined over a sampling period of fifteen minutes.

(d) *Exposure monitoring.* (1) *Characterization of employee exposure.* (i) Where MC is present in the workplace, the employer shall determine each employee's exposure by either:

(A) Taking a personal breathing zone air sample of each employee's exposure; or

(B) Taking personal breathing zone air samples that are representative of each employee's exposure.

(ii) *Representative samples.* The employer may consider personal breathing zone air samples to be representative of employee exposures when they are taken as follows:

(A) *8-hour TWA PEL.* The employer has taken one or more personal breathing zone air samples for at least one employee in each job classification in a work area during every work shift, and the employee sampled is expected to have the highest MC exposure.

(B) *Short-term exposure limits.* The employer has taken one or more personal breathing zone air samples which indicate the highest likely 15-minute exposures during such operations for at least one employee in each job classification in the work area during every work shift, and the employee sampled is expected to have the highest MC exposure.

(C) *Exception.* Personal breathing zone air samples taken during one work shift may be used to represent employee exposures on other work shifts where the employer can document that the tasks performed and conditions in the workplace are similar across shifts.

(iii) *Accuracy of monitoring.* The employer shall ensure that the methods used to perform exposure monitoring produce results that are accurate to a confidence level of 95 percent, and are:

(A) Within plus or minus 25 percent for airborne concentrations of MC above the 8-hour TWA PEL or the STEL; or

(B) Within plus or minus 35 percent for airborne concentrations of MC at or above the action level but at or below the 8-hour TWA PEL.

(2) *Initial determination.* Each employer whose employees are exposed to MC shall perform initial exposure monitoring to determine each affected employee's exposure, except under the following conditions:

(i) Where objective data demonstrate that MC cannot be released in the workplace in airborne concentrations at or above the action level or above the STEL. The objective data shall represent the highest MC exposures likely to occur under reasonably foreseeable conditions of processing, use, or handling. The employer shall document the objective data exemption as specified in paragraph (m) of this section;

(ii) Where the employer has performed exposure monitoring within 12 months prior to April 10, 1997 and that exposure monitoring meets all other requirements of this section, and was conducted under conditions substantially equivalent to existing conditions; or

(iii) Where employees are exposed to MC on fewer than 30 days per year (e.g., on a construction site), and the employer has measurements by direct-reading instruments which give immediate results (such as a detector tube) and which provide sufficient information regarding employee exposures to determine what control measures are necessary to reduce exposures to acceptable levels.

(3) *Periodic monitoring.* Where the initial determination shows employee exposures at or above the action level or above the STEL, the employer shall establish an exposure monitoring program for periodic monitoring of employee exposure to MC in accordance with Table 1:

Table 1.—SIX INITIAL DETERMINATION EXPOSURE SCENARIOS AND THEIR ASSOCIATED MONITORING FREQUENCIES

Exposure scenario	Required monitoring activity
Below the action level and at or below the STEL	No 8-hour TWA or STEL monitoring required.
Below the action level and above the STEL	No 8-hour TWA monitoring required; monitor STEL exposures every three months.
At or above the action level, at or below the TWA, and at or below the STEL.	Monitor 8-hour TWA exposures every six months.
At or above the action level, at or below the TWA, and above the STEL	Monitor 8-hour TWA exposures every six months and monitor STEL exposures every three months.
Above the TWA and at or below the STEL	Monitor 8-hour TWA exposures every three months.
Above the TWA and above the STEL	Monitor 8-hour TWA exposures and STEL exposures every three months.

[Note to paragraph (d)(3): The employer may decrease the frequency of exposure monitoring to every six months when at least 2 consecutive measurements taken at least 7 days apart show exposures to be at or below the 8-hour TWA PEL. The employer may discontinue the periodic 8-hour TWA monitoring for employees where at least two consecutive measurements taken at least 7 days apart are below the action level. The employer may discontinue the periodic STEL monitoring for employees where at least two consecutive measurements taken at least 7 days apart are at or below the STEL.]

(4) *Additional monitoring.* (i) The employer shall perform exposure monitoring when a change in workplace conditions indicates that employee exposure may have increased. Examples of situations that may require additional monitoring include changes in production, process, control equipment, or work practices, or a leak, rupture, or other breakdown.

(ii) Where exposure monitoring is performed due to a spill, leak, rupture or equipment breakdown, the employer shall clean-up the MC and perform the appropriate repairs before monitoring.

(5) *Employee notification of monitoring results.* (i) The employer shall, within 15 working days after the receipt of the results of any monitoring performed under this section, notify each affected employee of these results in writing, either individually or by posting of results in an appropriate location that is accessible to affected employees.

(ii) Whenever monitoring results indicate that employee exposure is above the 8-hour TWA PEL or the STEL, the employer shall describe in the written notification the corrective action being taken to reduce employee exposure to or below the 8-hour TWA PEL or STEL and the schedule for completion of this action.

(6) *Observation of monitoring.* (i) *Employee observation.* The employer shall provide affected employees or their designated representatives an opportunity to observe any monitoring of employee exposure to MC conducted in accordance with this section.

(ii) *Observation procedures.* When observation of the monitoring of employee exposure to MC requires entry into an area where the use of protective clothing or equipment is required, the employer shall provide, at no cost to the observer(s), and the observer(s) shall be required to use such clothing and equipment and shall comply with all other applicable safety and health procedures.

(e) *Regulated areas.* (1) The employer shall establish a regulated area wherever an employee's exposure to airborne concentrations of MC exceeds or can reasonably be expected to exceed either the 8-hour TWA PEL or the STEL.

(2) The employer shall limit access to regulated areas to authorized persons.

(3) The employer shall supply a respirator, selected in accordance with paragraph (h)(3) of this section, to each person who enters a regulated area and shall require each affected employee to use that respirator whenever MC exposures are likely to exceed the 8-hour TWA PEL or STEL.

[Note to paragraph (e)(3): An employer who has implemented all feasible engineering, work practice and administrative controls (as required in paragraph (f) of this section), and who has established a regulated area (as required by paragraph (e)(1) of this section) where MC exposure can be reliably predicted to exceed the 8-hour TWA PEL or the STEL only on certain days (for example, because of work or process schedule) would need to have affected employees use respirators in that regulated area only on those days.]

(4) The employer shall ensure that, within a regulated area, employees do not engage in non-work activities which may increase dermal or oral MC exposure.

(5) The employer shall ensure that while employees are wearing respirators, they do not engage in activities (such as taking medication or chewing gum or tobacco) which interfere with respirator seal or performance.

(6) The employer shall demarcate regulated areas from the rest of the workplace in any manner that adequately establishes and alerts employees to the boundaries of the area and minimizes the number of authorized employees exposed to MC within the regulated area.

(7) An employer at a multi-employer worksite who establishes a regulated area shall communicate the access restrictions and locations of these areas to all other employers with work operations at that worksite.

(f) *Methods of compliance.* (1) *Engineering and work practice controls.* The employer shall institute and

maintain the effectiveness of engineering controls and work practices to reduce employee exposure to or below the PELs except to the extent that the employer can demonstrate that such controls are not feasible. Wherever the feasible engineering controls and work practices which can be instituted are not sufficient to reduce employee exposure to or below the 8–TWA PEL or STEL, the employer shall use them to reduce employee exposure to the lowest levels achievable by these controls and shall supplement them by the use of respiratory protection that complies with the requirements of paragraph (g) of this section.

(2) *Prohibition of rotation.* The employer shall not implement a schedule of employee rotation as a means of compliance with the PELs.

(3) *Leak and spill detection.* (i) The employer shall implement procedures to detect leaks of MC in the workplace. In work areas where spills may occur, the employer shall make provisions to contain any spills and to safely dispose of any MC-contaminated waste materials.

(ii) The employer shall ensure that all incidental leaks are repaired and that incidental spills are cleaned promptly by employees who use the appropriate personal protective equipment and are trained in proper methods of cleanup. [Note to paragraph (f)(3)(ii): See Appendix A of this section for examples of procedures that satisfy this requirement. Employers covered by this standard may also be subject to the hazardous waste and emergency response provisions contained in 29 CFR 1910.120 (q).]

(g) *Respiratory protection.* (1) *General requirements.* The employer shall provide a respirator which complies with the requirement of this paragraph, at no cost to each affected employee, and ensure that each affected employee uses such respirator where appropriate. Respirators shall be used in the following circumstances:

(i) Whenever an employee's exposure to MC exceeds or can reasonably be expected to exceed the 8-hour TWA PEL or the STEL (such as where an employee is using MC in a regulated area);

(ii) During the time interval necessary to install or implement feasible engineering and work practice controls;

(iii) In a few work operations, such as some maintenance operations and repair activities, for which the employer demonstrates that engineering and work practice controls are infeasible;

(iv) Where feasible engineering and work practice controls are not sufficient to reduce exposures to or below the PELs; or

(v) In emergencies.

(2) *Medical Evaluation.* Before having any employee use a supplied-air respirator in the negative pressure mode, or a gas mask with organic vapor canister for emergency escape, the employer shall have a physician or other licensed health care professional ascertain each affected employee's ability to use such respiratory protection. The physician or other licensed health care professional shall provide his or her findings to the affected employee and the employer in a written opinion.

(3) *Respirator selection.* The appropriate atmosphere-supplying respirators, as specified in Table 2, shall be selected from those approved by the National Institute for Occupational Safety and Health (NIOSH) under the provisions of 42 CFR Part 84, ''Respiratory Protective Devices.'' When employers elect to provide gas masks with organic vapor canisters for use in emergency escape, the organic vapor canisters shall bear the approval of NIOSH.

TABLE 2.—MINIMUM REQUIREMENTS FOR RESPIRATORY PROTECTION FOR AIRBORNE METHYLENE CHLORIDE

Methylene chloride airborne concentration (ppm) or condition of use	Minimum respirator required [1]
Up to 625 ppm (25 X PEL)	(1) Continuous flow supplied-air respirator, hood or helmet.
Up to 1250 ppm (50 X 8–TWA PEL)	(1) Full facepiece supplied-air respirator operated in negative pressure (demand) mode. (2) Full facepiece self-contained breathing apparatus (SCBA) operated in negative pressure (demand) mode.
Up to 5000 ppm (200 X 8–TWA PEL)	(1) Continuous flow supplied-air respirator, full facepiece. (2) Pressure demand supplied-air respirator, full facepiece. (3) Positive pressure full facepiece SCBA.
Unknown concentration, or above 5000 ppm (Greater than 200 X 8–TWA PEL).	(1) Positive pressure full facepiece SCBA. (2) Full facepiece pressure demand supplied-air respirator with an auxiliary self-contained air supply.
Fire fighting	Positive pressure full facepiece SCBA.
Emergency escape	(1) Any continuous flow or pressure demand SCBA. (2) Gas mask with organic vapor canister.

[1] Respirators assigned for higher airborne concentrations may be used at lower concentrations.

(4) *Respirator program.* Where respiratory protection is required by this section, the employer shall institute a respirator program in accordance with 29 CFR 1910.134.

(5) *Permission to leave area.* The employer shall permit employees who wear respirators to leave the regulated area to readjust the facepieces to their faces to achieve a proper fit, and to wash their faces and respirator facepieces as necessary in order to prevent skin irritation associated with respirator use.

(6) *Filter respirators.* Employers who provide gas masks with organic vapor canisters for the purpose of emergency escape shall replace those canisters after any emergency use before those gas masks are returned to service.

(7) *Respirator fit testing.* (i) The employer shall ensure that each respirator issued to the employee is properly fitted and exhibits the least possible facepiece leakage from among the facepieces tested.

(ii) The employer shall perform qualitative or quantitative fit tests at the time of initial fitting and at least annually thereafter for each employee wearing a negative pressure respirator, including those employees for whom emergency escape respirators are provided.

[Note to paragraph (g)(7)(ii): The only supplied-air respirators to which this provision would apply are SCBA in negative pressure mode and full facepiece supplied-air respirators operated in negative pressure mode. The small business compliance guides will contain examples of protocols for qualitative and quantitative fit testing.]

(h) *Protective Work Clothing and Equipment.* (1) Where needed to prevent

MC-induced skin or eye irritation, the employer shall provide clean protective clothing and equipment which is resistant to MC, at no cost to the employee, and shall ensure that each affected employee uses it. Eye and face protection shall meet the requirements of 29 CFR 1910.133 or 29 CFR 1915.153, as applicable.

(2) The employer shall clean, launder, repair and replace all protective clothing and equipment required by this paragraph as needed to maintain their effectiveness.

(3) The employer shall be responsible for the safe disposal of such clothing and equipment. [Note to paragraph (h)(4): See Appendix A for examples of disposal procedures that will satisfy this requirement.]

(i) *Hygiene facilities.* (1) If it is reasonably foreseeable that employees' skin may contact solutions containing 0.1 percent or greater MC (for example, through splashes, spills or improper work practices), the employer shall provide conveniently located washing facilities capable of removing the MC, and shall ensure that affected employees use these facilities as needed.

(2) If it is reasonably foreseeable that an employee's eyes may contact solutions containing 0.1 percent or greater MC (for example through splashes, spills or improper work practices), the employer shall provide appropriate eyewash facilities within the immediate work area for emergency use, and shall ensure that affected employees use those facilities when necessary.

(j) *Medical surveillance.* (1) *Affected employees.* The employer shall make medical surveillance available for employees who are or may be exposed to MC as follows:

(i) At or above the action level on 30 or more days per year, or above the 8-hour TWA PEL or the STEL on 10 or more days per year;

(ii) Above the 8–TWA PEL or STEL for any time period where an employee has been identified by a physician or other licensed health care professional as being at risk from cardiac disease or from some other serious MC-related health condition and such employee requests inclusion in the medical surveillance program;

(iii) During an emergency.

(2) *Costs.* The employer shall provide all required medical surveillance at no cost to affected employees, without loss of pay and at a reasonable time and place.

(3) *Medical personnel.* The employer shall ensure that all medical surveillance procedures are performed by a physician or other licensed health care professional, as defined in paragraph (b) of this section.

(4) *Frequency of medical surveillance.* The employer shall make medical surveillance available to each affected employee as follows:

(i) *Initial surveillance.* The employer shall provide initial medical surveillance under the schedule provided by paragraph (n)(2)(iii) of this section, or before the time of initial assignment of the employee, whichever is later. The employer need not provide the initial surveillance if medical records show that an affected employee has been provided with medical surveillance that complies with this section within 12 months before April 10, 1997.

(ii) *Periodic medical surveillance.* The employer shall update the medical and work history for each affected employee annually. The employer shall provide periodic physical examinations, including appropriate laboratory surveillance, as follows:

(A) For employees 45 years of age or older, within 12 months of the initial surveillance or any subsequent medical surveillance; and

(B) For employees younger than 45 years of age, within 36 months of the initial surveillance or any subsequent medical surveillance.

(iii) *Termination of employment or reassignment.* When an employee leaves the employer's workplace, or is reassigned to an area where exposure to MC is consistently at or below the action level and STEL, medical surveillance shall be made available if six months or more have elapsed since the last medical surveillance.

(iv) *Additional surveillance.* The employer shall provide additional medical surveillance at frequencies other than those listed above when recommended in the written medical opinion. (For example, the physician or other licensed health care professional may determine an examination is warranted in less than 36 months for employees younger than 45 years of age based upon evaluation of the results of the annual medical and work history.)

(5) *Content of medical surveillance.* (i) *Medical and work history.* The comprehensive medical and work history shall emphasize neurological symptoms, skin conditions, history of hematologic or liver disease, signs or symptoms suggestive of heart disease (angina, coronary artery disease), risk factors for cardiac disease, MC exposures, and work practices and personal protective equipment used during such exposures. [Note to paragraph (j)(5)(i): See Appendix B of this section for an example of a medical and work history format that would satisfy this requirement.]

(ii) *Physical examination.* Where physical examinations are provided as required above, the physician or other licensed health care professional shall accord particular attention to the lungs, cardiovascular system (including blood pressure and pulse), liver, nervous system, and skin. The physician or other licensed health care professional shall determine the extent and nature of the physical examination based on the health status of the employee and analysis of the medical and work history.

(iii) *Laboratory surveillance.* The physician or other licensed health care professional shall determine the extent of any required laboratory surveillance based on the employee's observed health status and the medical and work history. [Note to paragraph (j)(5)(iii): See Appendix B of this section for information regarding medical tests. Laboratory surveillance may include before- and after-shift carboxyhemoglobin determinations, resting ECG, hematocrit, liver function tests and cholesterol levels.]

(iv) *Other information or reports.* The medical surveillance shall also include any other information or reports the physician or other licensed health care professional determines are necessary to assess the employee's health in relation to MC exposure.

(6) *Content of emergency medical surveillance.* The employer shall ensure that medical surveillance made available when an employee has been exposed to MC in emergency situations includes, at a minimum:

(i) Appropriate emergency treatment and decontamination of the exposed employee;

(ii) Comprehensive physical examination with special emphasis on the nervous system, cardiovascular system, lungs, liver and skin, including blood pressure and pulse;

(iii) Updated medical and work history, as appropriate for the medical condition of the employee; and

(iv) Laboratory surveillance, as indicated by the employee's health status. [Note to paragraph (j)(6)(iv): See Appendix B for examples of tests which may be appropriate.]

(7) *Additional examinations and referrals.* Where the physician or other licensed health care professional determines it is necessary, the scope of the medical examination shall be expanded and the appropriate additional medical surveillance, such as referrals for consultation or examination, shall be provided.

(8) *Information provided to the physician or other licensed health care professional.* The employer shall provide the following information to a physician or other licensed health care professional who is involved in the diagnosis of MC-induced health effects:

(i) A copy of this section including its applicable appendices;

(ii) A description of the affected employee's past, current and anticipated future duties as they relate to the employee's MC exposure;

(iii) The employee's former or current exposure levels or, for employees not yet occupationally exposed to MC, the employee's anticipated exposure levels and the frequency and exposure levels anticipated to be associated with emergencies;

(iv) A description of any personal protective equipment, such as respirators, used or to be used; and

(v) Information from previous employment-related medical surveillance of the affected employee which is not otherwise available to the physician or other licensed health care professional.

(9) *Written medical opinions.* (i) For each physical examination required by this section, the employer shall ensure that the physician or other licensed health care professional provides to the employer and to the affected employee a written opinion regarding the results of that examination within 15 days of completion of the evaluation of medical and laboratory findings, but not more than 30 days after the examination. The written medical opinion shall be limited to the following information:

(A) The physician's or other licensed health care professional's opinion concerning whether the employee has any detected medical condition(s) which would place the employee's health at increased risk of material impairment from exposure to MC;

(B) Any recommended limitations upon the employee's exposure to MC or upon the employee's use of protective clothing or equipment and respirators;

(C) A statement that the employee has been informed by the physician or other licensed health care professional that MC is a potential occupational carcinogen, of risk factors for heart disease, and the potential for exacerbation of underlying heart disease by exposure to MC through its metabolism to carbon monoxide; and

(D) A statement that the employee has been informed by the physician or other licensed health care professional of the results of the medical examination and any medical conditions resulting from MC exposure which require further explanation or treatment.

(ii) The employer shall instruct the physician or other licensed health care professional not to reveal to the employer, orally or in the written opinion, any specific records, findings, and diagnoses that have no bearing on occupational exposure to MC. [Note to paragraph (j)(9)(ii): The written medical opinion may also include information and opinions generated to comply with other OSHA health standards.]

(k) *Hazard communication.* The employer shall communicate the following hazards associated with MC on labels and in material safety data sheets in accordance with the requirements of the Hazard Communication Standard, 29 CFR 1910.1200, 29 CFR 1915.1200, or 29 CFR 1926.59, as appropiate: cancer, cardiac effects (including elevation of carboxyhemoglobin), central nervous system effects, liver effects, and skin and eye irritation.

(l) *Employee information and training.* (1) The employer shall provide information and training for each affected employee prior to or at the time of initial assignment to a job involving potential exposure to MC.

(2) The employer shall ensure that information and training is presented in a manner that is understandable to the employees.

(3) In addition to the information required under the Hazard Communication Standard at 29 CFR 1910.1200, 29 CFR 1915.1200, or 29 CFR 1926.59, as appropiate:

(i) The employer shall inform each affected employee of the requirements of this section and information available in its appendices, as well as how to access or obtain a copy of it in the workplace;

(ii) Wherever an employee's exposure to airborne concentrations of MC exceeds or can reasonably be expected to exceed the action level, the employer shall inform each affected employee of the quantity, location, manner of use, release, and storage of MC and the specific operations in the workplace that could result in exposure to MC, particularly noting where exposures may be above the 8-hour TWA PEL or STEL;

(4) The employer shall train each affected employee as required under the Hazard Communication standard at 29 CFR 1910.1200, 29 CFR 1915.1200, or 29 CFR 1926.59, as appropiate.

(5) The employer shall re-train each affected employee as necessary to ensure that each employee exposed above the action level or the STEL maintains the requisite understanding of the principles of safe use and handling of MC in the workplace.

(6) Whenever there are workplace changes, such as modifications of tasks or procedures or the institution of new tasks or procedures, which increase employee exposure, and where those exposures exceed or can reasonably be expected to exceed the action level, the employer shall update the training as necessary to ensure that each affected employee has the requisite proficiency.

(7) An employer whose employees are exposed to MC at a multi-employer worksite shall notify the other employers with work operations at that site in accordance with the requirements of the Hazard Communication Standard, 29 CFR 1910.1200, 29 CFR 1915.1200, or 29 CFR 1926.59, as appropiate.

(8) The employer shall provide to the Assistant Secretary or the Director, upon request, all available materials relating to employee information and training.

(m) *Recordkeeping.* (1) *Objective data.* (i) Where an employer seeks to demonstrate that initial monitoring is unnecessary through reasonable reliance on objective data showing that any materials in the workplace containing MC will not release MC at levels which exceed the action level or the STEL under foreseeable conditions of exposure, the employer shall establish and maintain an accurate record of the objective data relied upon in support of the exemption.

(ii) This record shall include at least the following information:

(A) The MC-containing material in question;

(B) The source of the objective data;

(C) The testing protocol, results of testing, and/or analysis of the material for the release of MC;

(D) A description of the operation exempted under paragraph (d)(2)(i) of this section and how the data support the exemption; and

(E) Other data relevant to the operations, materials, processing, or employee exposures covered by the exemption.

(iii) The employer shall maintain this record for the duration of the employer's reliance upon such objective data.

(2) *Exposure measurements.* (i) The employer shall establish and keep an accurate record of all measurements taken to monitor employee exposure to MC as prescribed in paragraph (d) of this section.

(ii) Where the employer has 20 or more employees, this record shall include at least the following information:

(A) The date of measurement for each sample taken;

(B) The operation involving exposure to MC which is being monitored;

(C) Sampling and analytical methods used and evidence of their accuracy;

(D) Number, duration, and results of samples taken;

(E) Type of personal protective equipment, such as respiratory protective devices, worn, if any; and

(F) Name, social security number, job classification and exposure of all of the employees represented by monitoring, indicating which employees were actually monitored.

(iii) Where the employer has fewer than 20 employees, the record shall include at least the following information:

(A) The date of measurement for each sample taken;

(B) Number, duration, and results of samples taken; and

(C) Name, social security number, job classification and exposure of all of the employees represented by monitoring, indicating which employees were actually monitored.

(iv) The employer shall maintain this record for at least thirty (30) years, in accordance with 29 CFR 1910.1020.

(3) *Medical surveillance.* (i) The employer shall establish and maintain an accurate record for each employee subject to medical surveillance under paragraph (j) of this section.

(ii) The record shall include at least the following information:

(A) The name, social security number and description of the duties of the employee;

(B) Written medical opinions; and

(C) Any employee medical conditions related to exposure to MC.

(iii) The employer shall ensure that this record is maintained for the duration of employment plus thirty (30) years, in accordance with 29 CFR 1910.1020.

(4) *Availability.* (i) The employer, upon written request, shall make all records required to be maintained by this section available to the Assistant Secretary and the Director for examination and copying in accordance with 29 CFR 1910.1020. [Note to paragraph (m)(4)(i): All records required to be maintained by this section may be kept in the most administratively convenient form (for example, electronic or computer records would satisfy this requirement).]

(ii) The employer, upon request, shall make any employee exposure and objective data records required by this section available for examination and copying by affected employees, former employees, and designated representatives in accordance with 29 CFR 1910.1020.

(iii) The employer, upon request, shall make employee medical records required to be kept by this section available for examination and copying by the subject employee and by anyone having the specific written consent of the subject employee in accordance with 29 CFR 1910.1020.

(5) *Transfer of records.* The employer shall comply with the requirements concerning transfer of records set forth in 29 CFR 1910.1020(h).

(n) *Dates.* (1) *Effective date.* This section shall become effective April 10, 1997.

(2) *Start-up dates.*

(i) Initial monitoring required by paragraph (d)(2) of this section shall be completed according to the following schedule:

(A) For employers with fewer than 20 employees, within 300 days after the effective date of this section.

(B) For polyurethane foam manufacturers with 20 to 99 employees, within 210 days after the effective date of this section.

(C) For all other employers, within 120 days after the effective date of this section.

(ii) Engineering controls required under paragraph (f)(1) of this section shall be implemented according to the following schedule:

(A) For employers with fewer than 20 employees, within three (3) years after the effective date of this section.

(B) For polyurethane foam manufacturers with 20 to 99 employees, within two (2) years after the effective date of this section.

(C) For all other employers, within one (1) year after the effective date of this section.

(iii) All other requirements of this section shall be complied with according to the following schedule:

(A) For employers with fewer than 20 employees, within one (1) year after the effective date of this section.

(B) For polyurethane foam manufacturers with 20 to 99 employees, within 270 days after the effective date of this section.

(C) For all other employers, within 180 days after the effective date of this section.

(3) *Transitional dates.* The exposure limits for MC specified in 29 CFR 1910.1000 (1996), Table Z-2, shall remain in effect until the start-up dates for the exposure limits specified in paragraph (n) of this section, or if the exposure limits in this section are stayed or vacated.

(o) *Appendices.* The information contained in the appendices does not, by itself, create any additional obligations not otherwise imposed or detract from any existing obligation.

Appendix A to Section 1910.1052: Substance Safety Data Sheet and Technical Guidelines for Methylene Chloride

I. Substance Identification

A. Substance: Methylene chloride (CH_2Cl_2).

B. Synonyms: MC, Dichloromethane (DCM); Methylene dichloride; Methylene bichloride; Methane dichloride; CAS: 75–09–2; NCI–C50102.

C. Physical data:

1. Molecular weight: 84.9.

2. Boiling point (760 mm Hg): 39.8°C (104°F).

3. Specific gravity (water=1): 1.3.

4. Vapor density (air=1 at boiling point): 2.9.

5. Vapor pressure at 20° C (68° F): 350 mm Hg.

6. Solubility in water, g/100 g water at 20° C (68° F)=1.32.

7. Appearance and odor: colorless liquid with a chloroform-like odor.

D. Uses:

MC is used as a solvent, especially where high volatility is required. It is a good solvent for oils, fats, waxes, resins, bitumen, rubber and cellulose acetate and is a useful paint stripper and degreaser. It is used in paint removers, in propellant mixtures for aerosol containers, as a solvent for plastics, as a degreasing agent, as an extracting agent in the pharmaceutical industry and as a blowing agent in polyurethane foams. Its solvent property is sometimes increased by mixing with methanol, petroleum naphtha or tetrachloroethylene.

E. Appearance and odor:

MC is a clear colorless liquid with a chloroform-like odor. It is slightly soluble in water and completely miscible with most organic solvents.

F. Permissible exposure:

Exposure may not exceed 25 parts MC per million parts of air (25 ppm) as an eight-hour time-weighted average (8-hour TWA PEL) or 125 parts of MC per million parts of air (125 ppm) averaged over a 15-minute period (STEL).

II. Health Hazard Data

A. MC can affect the body if it is inhaled or if the liquid comes in contact with the eyes or skin. It can also affect the body if it is swallowed.

B. Effects of overexposure:

1. Short-term Exposure:

MC is an anesthetic. Inhaling the vapor may cause mental confusion, light-headedness, nausea, vomiting, and headache. Continued exposure may cause increased light-headedness, staggering, unconsciousness, and even death. High vapor concentrations may also cause irritation of the eyes and respiratory tract. Exposure to MC may make the symptoms of angina (chest pains) worse. Skin exposure to liquid MC may cause irritation. If liquid MC remains on the skin, it may cause skin burns. Splashes of the liquid into the eyes may cause irritation.

2. Long-term (chronic) exposure:

The best evidence that MC causes cancer is from laboratory studies in which rats, mice and hamsters inhaled MC 6 hours per day,

5 days per week for 2 years. MC exposure produced lung and liver tumors in mice and mammary tumors in rats. No carcinogenic effects of MC were found in hamsters.

There are also some human epidemiological studies which show an association between occupational exposure to MC and increases in biliary (bile duct) cancer and a type of brain cancer. Other epidemiological studies have not observed a relationship between MC exposure and cancer. OSHA interprets these results to mean that there is suggestive (but not absolute) evidence that MC is a human carcinogen.

C. Reporting signs and symptoms:

You should inform your employer if you develop any signs or symptoms and suspect that they are caused by exposure to MC.

D. Warning Properties:

1. Odor Threshold:

Different authors have reported varying odor thresholds for MC. Kirk-Othmer and Sax both reported 25 to 50 ppm; Summer and May both reported 150 ppm; Spector reports 320 ppm. Patty, however, states that since one can become adapted to the odor, MC should not be considered to have adequate warning properties.

2. Eye Irritation Level:

Kirk-Othmer reports that ''MC vapor is seriously damaging to the eyes.'' Sax agrees with Kirk-Othmer's statement. The ACGIH Documentation of TLVs states that irritation of the eyes has been observed in workers exposed to concentrations up to 5000 ppm.

3. Evaluation of Warning Properties:

Since a wide range of MC odor thresholds are reported (25–320 ppm), and human adaptation to the odor occurs, MC is considered to be a material with poor warning properties.

III. Emergency First Aid Procedures

In the event of emergency, institute first aid procedures and send for first aid or medical assistance.

A. Eye and Skin Exposures:

If there is a potential for liquid MC to come in contact with eye or skin, face shields and skin protective equipment must be provided and used. If liquid MC comes in contact with the eye, get medical attention. Contact lenses should not be worn when working with this chemical.

B. Breathing:

If a person breathes in large amounts of MC, move the exposed person to fresh air at once. If breathing has stopped, perform cardiopulmorary resuscitation. Keep the affected person warm and at rest. Get medical attention as soon as possible.

C. Rescue:

Move the affected person from the hazardous exposure immediately. If the exposed person has been overcome, notify someone else and put into effect the established emergency rescue procedures. Understand the facility's emergency rescue procedures and know the locations of rescue equipment before the need arises. Do not become a casualty yourself.

IV. Respirators, Protective Clothing, and Eye Protection

A. Respirators:

Good industrial hygiene practices recommend that engineering controls be used to reduce environmental concentrations to the permissible exposure level. However, there are some exceptions where respirators may be used to control exposure. Respirators may be used when engineering and work practice controls are not feasible, when such controls are in the process of being installed, or when these controls fail and need to be supplemented. Respirators may also be used for operations which require entry into tanks or closed vessels, and in emergency situations.

If the use of respirators is necessary, the only respirators permitted are those that have been approved by the Mine Safety and Health Administration (MSHA) or the National Institute for Occupational Safety and Health (NIOSH). Supplied-air respirators are *required* because air-purifying respirators do not provide adequate respiratory protection against MC.

In addition to respirator selection, a complete written respiratory protection program should be instituted which includes regular training, maintenance, inspection, cleaning, and evaluation. If you can smell MC while wearing a respirator, proceed immediately to fresh air. If you experience difficulty in breathing while wearing a respirator, tell your employer.

B. Protective Clothing:

Employees must be provided with and required to use impervious clothing, gloves, face shields (eight-inch minimum), and other appropriate protective clothing necessary to prevent repeated or prolonged skin contact with liquid MC or contact with vessels containing liquid MC. Any clothing which becomes wet with liquid MC should be removed immediately and not reworn until the employer has ensured that the protective clothing is fit for reuse. Contaminated protective clothing should be placed in a regulated area designated by the employer for removal of MC before the clothing is laundered or disposed of. Clothing and equipment should remain in the regulated area until all of the MC contamination has evaporated; clothing and equipment should then be laundered or disposed of as appropriate.

C. Eye Protection:

Employees should be provided with and required to use splash-proof safety goggles where liquid MC may contact the eyes.

V. Housekeeping and Hygiene Facilities

For purposes of complying with 29 CFR 1910.141, the following items should be emphasized:

A. The workplace should be kept clean, orderly, and in a sanitary condition. The employer should institute a leak and spill detection program for operations involving liquid MC in order to detect sources of fugitive MC emissions.

B. Emergency drench showers and eyewash facilities are recommended. These should be maintained in a sanitary condition. Suitable cleansing agents should also be provided to assure the effective removal of MC from the skin.

C. Because of the hazardous nature of MC, contaminated protective clothing should be placed in a regulated area designated by the employer for removal of MC before the clothing is laundered or disposed of.

VI. Precautions for Safe Use, Handling, and Storage

A. Fire and Explosion Hazards:

MC has no flash point in a conventional closed tester, but it forms flammable vapor-air mixtures at approximately 100°C (212°F), or higher. It has a lower explosion limit of 12%, and an upper explosion limit of 19% in air. It has an autoignition temperature of 556.1°C (1033°F), and a boiling point of 39.8°C (104°F). It is heavier than water with a specific gravity of 1.3. It is slightly soluble in water.

B. Reactivity Hazards:

Conditions contributing to the instability of MC are heat and moisture. Contact with strong oxidizers, caustics, and chemically active metals such as aluminum or magnesium powder, sodium and potassium may cause fires and explosions.

Special precautions: Liquid MC will attack some forms of plastics, rubber, and coatings.

C. Toxicity:

Liquid MC is painful and irritating if splashed in the eyes or if confined on the skin by gloves, clothing, or shoes. Vapors in high concentrations may cause narcosis and death. Prolonged exposure to vapors may cause cancer or exacerbate cardiac disease.

D. Storage:

Protect against physical damage. Because of its corrosive properties, and its high vapor pressure, MC should be stored in plain, galvanized or lead lined, mild steel containers in a cool, dry, well ventilated area away from direct sunlight, heat source and acute fire hazards.

E. Piping Material:

All piping and valves at the loading or unloading station should be of material that is resistant to MC and should be carefully inspected prior to connection to the transport vehicle and periodically during the operation.

F. Usual Shipping Containers:

Glass bottles, 5- and 55-gallon steel drums, tank cars, and tank trucks.

Note: This section addresses MC exposure in marine terminal and longshore employment only where leaking or broken packages allow MC exposure that is not addressed through compliance with 29 CFR parts 1917 and 1918, respectively.

G. Electrical Equipment:

Electrical installations in Class I hazardous locations as defined in Article 500 of the National Electrical Code, should be installed according to Article 501 of the code; and electrical equipment should be suitable for use in atmospheres containing MC vapors. See Flammable and Combustible Liquids Code (NFPA No. 325M), Chemical Safety Data Sheet SD–86 (Manufacturing Chemists' Association, Inc.).

H. Fire Fighting:

When involved in fire, MC emits highly toxic and irritating fumes such as phosgene, hydrogen chloride and carbon monoxide. Wear breathing apparatus and use water spray to keep fire-exposed containers cool. Water spray may be used to flush spills away from exposures. Extinguishing media are dry

chemical, carbon dioxide, foam. For purposes of compliance with 29 CFR 1910.307, locations classified as hazardous due to the presence of MC shall be Class I.

I. Spills and Leaks:

Persons not wearing protective equipment and clothing should be restricted from areas of spills or leaks until cleanup has been completed. If MC has spilled or leaked, the following steps should be taken:

1. Remove all ignition sources.
2. Ventilate area of spill or leak.
3. Collect for reclamation or absorb in vermiculite, dry sand, earth, or a similar material.

J. Methods of Waste Disposal:

Small spills should be absorbed onto sand and taken to a safe area for atmospheric evaporation. Incineration is the preferred method for disposal of large quantities by mixing with a combustible solvent and spraying into an incinerator equipped with acid scrubbers to remove hydrogen chloride gases formed. Complete combustion will convert carbon monoxide to carbon dioxide. Care should be taken for the presence of phosgene.

K. You should not keep food, beverage, or smoking materials, or eat or smoke in regulated areas where MC concentrations are above the permissible exposure limits.

L. Portable heating units should not be used in confined areas where MC is used.

M. Ask your supervisor where MC is used in your work area and for any additional plant safety and health rules.

VII. Medical Requirements

Your employer is required to offer you the opportunity to participate in a medical surveillance program if you are exposed to MC at concentrations at or above the action level (12.5 ppm 8-hour TWA) for more than 30 days a year or at concentrations exceeding the PELs (25 ppm 8-hour TWA or 125 ppm 15-minute STEL) for more than 10 days a year. If you are exposed to MC at concentrations over either of the PELs, your employer will also be required to have a physician or other licensed health care professional ensure that you are able to wear the respirator that you are assigned. Your employer must provide all medical examinations relating to your MC exposure at a reasonable time and place and at no cost to you.

VIII. Monitoring and Measurement Procedures

A. Exposure above the Permissible Exposure Limit:

1. Eight-hour exposure evaluation: Measurements taken for the purpose of determining employee exposure under this section are best taken with consecutive samples covering the full shift. Air samples must be taken in the employee's breathing zone.

2. Monitoring techniques: The sampling and analysis under this section may be performed by collection of the MC vapor on two charcoal adsorption tubes in series or other composition adsorption tubes, with subsequent chemical analysis. Sampling and analysis may also be performed by instruments such as real-time continuous monitoring systems, portable direct reading instruments, or passive dosimeters as long as measurements taken using these methods accurately evaluate the concentration of MC in employees'' breathing zones.

OSHA method 80 is an example of a validated method of sampling and analysis of MC. Copies of this method are available from OSHA or can be downloaded from the Internet at http://www.osha.gov. The employer has the obligation of selecting a monitoring method which meets the accuracy and precision requirements of the standard under his or her unique field conditions. The standard requires that the method of monitoring must be accurate, to a 95 percent confidence level, to plus or minus 25 percent for concentrations of MC at or above 25 ppm, and to plus or minus 35 percent for concentrations at or below 25 ppm. In addition to OSHA method 80, there are numerous other methods available for monitoring for MC in the workplace.

B. Since many of the duties relating to employee exposure are dependent on the results of measurement procedures, employers must assure that the evaluation of employee exposure is performed by a technically qualified person.

IX. Observation of Monitoring

Your employer is required to perform measurements that are representative of your exposure to MC and you or your designated representative are entitled to observe the monitoring procedure. You are entitled to observe the steps taken in the measurement procedure, and to record the results obtained. When the monitoring procedure is taking place in an area where respirators or personal protective clothing and equipment are required to be worn, you or your representative must also be provided with, and must wear, protective clothing and equipment.

X. Access To Information

A. Your employer is required to inform you of the information contained in this Appendix. In addition, your employer must instruct you in the proper work practices for using MC, emergency procedures, and the correct use of protective equipment.

B. Your employer is required to determine whether you are being exposed to MC. You or your representative has the right to observe employee measurements and to record the results obtained. Your employer is required to inform you of your exposure. If your employer determines that you are being over exposed, he or she is required to inform you of the actions which are being taken to reduce your exposure to within permissible exposure limits.

C. Your employer is required to keep records of your exposures and medical examinations. These records must be kept by the employer for at least thirty (30) years.

D. Your employer is required to release your exposure and medical records to you or your representative upon your request.

E. Your employee is required to provide labels and material safety data sheets (MSDS) for all materials, mixtures or solutions composed of greater than 0.1 percent MC. An example of a label that would satisfy these requirements would be:

Danger Contains Methylene Chloride
Potential Cancer Hazard

May worsen heart disease because methylene chloride is converted to carbon monoxide in the body.

May cause dizziness, headache, irritation of the throat and lungs, loss of consciousness and death at high concentrations (for example, if used in a poorly ventilated room).

Avoid Skin Contact. Contact with liquid causes skin and eye irritation.

XI. Common Operations and Controls

The following list includes some common operations in which exposure to MC may occur and control methods which may be effective in each case:

Operations	Controls
Use as solvent in paint and varnish removers; manufacture of aerosols; cold cleaning and ultrasonic cleaning; and as a solvent in furniture stripping.	General dilution ventilation; local exhaust ventilation; personal protective equipment; substitution.
Use as solvent in vapor degreasing.	Process enclosure; local exhaust ventilation; chilling coils; substitution.
Use as a secondary refrigerant in air conditioning and scientific testing.	General dilution ventilation; local exhaust ventilation; personal protective equipment.

Appendix B to Section 1910.1052: Medical Surveillance for Methylene Chloride

I. Primary Route of Entry

Inhalation.

II. Toxicology

Methylene Chloride (MC) is primarily an inhalation hazard. The principal acute hazardous effects are the depressant action on the central nervous system, possible cardiac toxicity and possible liver toxicity. The range of CNS effects are from decreased eye/hand coordination and decreased performance in vigilance tasks to narcosis and even death of individuals exposed at very high doses. Cardiac toxicity is due to the metabolism of MC to carbon monoxide, and the effects of carbon monoxide on heart tissue. Carbon monoxide displaces oxygen in the blood, decreases the oxygen available to heart tissue, increasing the risk of damage to the heart, which may result in heart attacks in susceptible individuals. Susceptible individuals include persons with heart disease and those with risk factors for heart disease.

Elevated liver enzymes and irritation to the respiratory passages and eyes have also been reported for both humans and experimental animals exposed to MC vapors.

MC is metabolized to carbon monoxide and carbon dioxide via two separate pathways. Through the first pathway, MC is metabolized to carbon monoxide as an end-product via the P–450 mixed function oxidase pathway located in the microsomal

fraction of the cell. This biotransformation of MC to carbon monoxide occurs through the process of microsomal oxidative dechlorination which takes place primarily in the liver. The amount of conversion to carbon monoxide is significant as measured by the concentration of carboxyhemoglobin, up to 12% measured in the blood following occupational exposure of up to 610 ppm. Through the second pathway, MC is metabolized to carbon dioxide as an end product (with formaldehyde and formic acid as metabolic intermediates) via the glutathione dependent enzyme found in the cytosolic fraction of the liver cell. Metabolites along this pathway are believed to be associated with the carcinogenic activity of MC.

MC has been tested for carcinogenicity in several laboratory rodents. These rodent studies indicate that there is clear evidence that MC is carcinogenic to male and female mice and female rats. Based on epidemiologic studies, OSHA has concluded that there is suggestive evidence of increased cancer risk in MC-related worker populations. The epidemiological evidence is consistent with the finding of excess cancer in the experimental animal studies. NIOSH regards MC as a potential occupational carcinogen and the International Agency for Research Cancer (IARC) classifies MC as an animal carcinogen. OSHA considers MC as a suspected human carcinogen.

III. Medical Signs and Symptoms of Acute Exposure

Skin exposure to liquid MC may cause irritation or skin burns. Liquid MC can also be irritating to the eyes. MC is also absorbed through the skin and may contribute to the MC exposure by inhalation.

At high concentrations in air, MC may cause nausea, vomiting, light-headedness, numbness of the extremities, changes in blood enzyme levels, and breathing problems, leading to bronchitis and pulmonary edema, unconsciousness and even death.

At lower concentrations in air, MC may cause irritation to the skin, eye, and respiratory tract and occasionally headache and nausea. Perhaps the greatest problem from exposure to low concentrations of MC is the CNS effects on coordination and alertness that may cause unsafe operations of machinery and equipment, leading to self-injury or accidents.

Low levels and short duration exposures do not seem to produce permanent disability, but chronic exposures to MC have been demonstrated to produce liver toxicity in animals, and therefore, the evidence is suggestive for liver toxicity in humans after chronic exposure.

Chronic exposure to MC may also cause cancer.

IV. Surveillance and Preventive Considerations

As discussed above, MC is classified as a suspect or potential human carcinogen. It is a central nervous system (CNS) depressant and a skin, eye and respiratory tract irritant. At extremely high concentrations, MC has caused liver damage in animals.

MC principally affects the CNS, where it acts as a narcotic. The observation of the symptoms characteristic of CNS depression, along with a physical examination, provides the best detection of early neurological disorders. Since exposure to MC also increases the carboxyhemoglobin level in the blood, ambient carbon monoxide levels would have an additive effect on that carboxyhemoglobin level. Based on such information, a periodic post-shift carboxyhemoglobin test as an index of the presence of carbon monoxide in the blood is recommended, but not required, for medical surveillance.

Based on the animal evidence and three epidemiologic studies previously mentioned, OSHA concludes that MC is a suspect human carcinogen. The medical surveillance program is designed to observe exposed workers on a regular basis. While the medical surveillance program cannot detect MC-induced cancer at a preneoplastic stage, OSHA anticipates that, as in the past, early detection and treatments of cancers leading to enhanced survival rates will continue to evolve.

A. Medical and Occupational History:

The medical and occupational work history plays an important role in the initial evaluation of workers exposed to MC. It is therefore extremely important for the examining physician or other licensed health care professional to evaluate the MC-exposed worker carefully and completely and to focus the examination on MC's potentially associated health hazards. The medical evaluation must include an annual detailed work and medical history with special emphasis on cardiac history and neurological symptoms.

An important goal of the medical history is to elicit information from the worker regarding potential signs or symptoms associated with increased levels of carboxyhemoglobin due to the presence of carbon monoxide in the blood. Physicians or other licensed health care professionals should ensure that the smoking history of all MC exposed employees is known. Exposure to MC may cause a significant increase in carboxyhemoglobin level in all exposed persons. However, smokers as well as workers with anemia or heart disease and those concurrently exposed to carbon monoxide are at especially high risk of toxic effects because of an already reduced oxygen carrying capacity of the blood.

A comprehensive or interim medical and work history should also include occurrence of headache, dizziness, fatigue, chest pain, shortness of breath, pain in the limbs, and irritation of the skin and eyes.

In addition, it is important for the physician or other licensed health care professional to become familiar with the operating conditions in which exposure to MC is likely to occur. The physician or other licensed health care professional also must become familiar with the signs and symptoms that may indicate that a worker is receiving otherwise unrecognized and exceptionally high exposure levels of MC.

An example of a medical and work history that would satisfy the requirement for a comprehensive or interim work history is represented by the following:

The following is a list of recommended questions and issues for the self-administered questionnaire for methylene chloride exposure.

Questionnaire For Methylene Chloride Exposure

I. Demographic Information

1. Name
2. Social Security Number
3. Date
4. Date of Birth
5. Age
6. Present occupation
7. Sex
8. Race

II. Occupational History

1. Have you ever worked with methylene chloride, dichloromethane, methylene dichloride, or CH_2Cl_2 (all are different names for the same chemical)? Please list which on the occupational history form if you have not already.

2. If you have worked in any of the following industries and have not listed them on the occupational history form, please do so.

Furniture stripping
Polyurethane foam manufacturing
Chemical manufacturing or formulation
Pharmaceutical manufacturing
Any industry in which you used solvents to clean and degrease equipment or parts
Construction, especially painting and refinishing
Aerosol manufacturing
Any industry in which you used aerosol adhesives

3. If you have not listed hobbies or household projects on the occupational history form, especially furniture refinishing, spray painting, or paint stripping, please do so.

III. Medical History

A. General

1. Do you consider yourself to be in good health? If no, state reason(s).

2. Do you or have you ever had:

a. Persistent thirst

b. Frequent urination (three times or more at night)

c. Dermatitis or irritated skin

d. Non-healing wounds

3. What prescription or non-prescription medications do you take, and for what reasons?

4. Are you allergic to any medications, and what type of reaction do you have?

B. Respiratory

1. Do you have or have you ever had any chest illnesses or diseases? Explain.

2. Do you have or have you ever had any of the following:

a. Asthma

b. Wheezing

c. Shortness of breath

3. Have you ever had an abnormal chest X-ray? If so, when, where, and what were the findings?

4. Have you ever had difficulty using a respirator or breathing apparatus? Explain.

5. Do any chest or lung diseases run in your family? Explain.

6. Have you ever smoked cigarettes, cigars, or a pipe? Age started:

7. Do you now smoke?

8. If you have stopped smoking completely, how old were you when you stopped?

9. On the average of the entire time you smoked, how many packs of cigarettes, cigars, or bowls of tobacco did you smoke per day?

C. Cardiovascular

1. Have you ever been diagnosed with any of the following: Which of the following apply to you now or did apply to you at some time in the past, even if the problem is controlled by medication? Please explain any yes answers (i.e., when problem was diagnosed, length of time on medication).

a. High cholesterol or triglyceride level
b. Hypertension (high blood pressure)
c. Diabetes
d. Family history of heart attack, stroke, or blocked arteries

2. Have you ever had chest pain? If so, answer the next five questions.

a. What was the quality of the pain (i.e., crushing, stabbing, squeezing)?
b. Did the pain go anywhere (i.e., into jaw, left arm)?
c. What brought the pain out?
d. How long did it last?
e. What made the pain go away?

3. Have you ever had heart disease, a heart attack, stroke, aneurysm, or blocked arteries anywhere in you body? Explain (when, treatment).

4. Have you ever had bypass surgery for blocked arteries in your heart or anywhere else? Explain.

5. Have you ever had any other procedures done to open up a blocked artery (balloon angioplasty, carotid endarterectomy, clot-dissolving drug)?

6. Do you have or have you ever had (explain each):

a. Heart murmur
b. Irregular heartbeat
c. Shortness of breath while lying flat
d. Congestive heart failure
e. Ankle swelling
f. Recurrent pain anywhere below the waist while walking

7. Have you ever had an electrocardiogram (EKG)? When?

8. Have you ever had an abnormal EKG? If so, when, where, and what were the findings?

9. Do any heart diseases, high blood pressure, diabetes, high cholesterol, or high triglycerides run in your family? Explain.

D. Hepatobiliary and Pancreas

1. Do you now or have you ever drunk alcoholic beverages? Age started: _____ Age stopped: _____.

2. Average numbers per week:

a. Beers: _____, ounces in usual container:
b. Glasses of wine: _____, ounces per glass:
c. Drinks: _____, ounces in usual container:

3. Do you have or have you ever had (explain each):

a. Hepatitis (infectious, autoimmune, drug-induced, or chemical)
b. Jaundice
c. Elevated liver enzymes or elevated bilirubin
d. Liver disease or cancer

E. Central Nervous System

1. Do you or have you ever had (explain each):

a. Headache
b. Dizziness
c. Fainting
d. Loss of consciousness
e. Garbled speech
f. Lack of balance
g. Mental/psychiatric illness
h. Forgetfulness

F. Hematologic

1. Do you have, or have you ever had (explain each):

a. Anemia
b. Sickle cell disease or trait
c. Glucose-6-phosphate dehydrogenase deficiency
d. Bleeding tendency disorder

2. If not already mentioned previously, have you ever had a reaction to sulfa drugs or to drugs used to prevent or treat malaria? What was the drug? Describe the reaction.

B. Physical Examination

The complete physical examination, when coupled with the medical and occupational history, assists the physician or other licensed health care professional in detecting pre-existing conditions that might place the employee at increased risk, and establishes a baseline for future health monitoring. These examinations should include:

1. Clinical impressions of the nervous system, cardiovascular function and pulmonary function, with additional tests conducted where indicated or determined by the examining physician or other licensed health care professional to be necessary.

2. An evaluation of the advisability of the worker using a respirator, because the use of certain respirators places an additional burden on the cardiopulmonary system. It is necessary for the attending physician or other licensed health care professional to evaluate the cardiopulmonary function of these workers, in order to inform the employer in a written medical opinion of the worker's ability or fitness to work in an area requiring the use of certain types of respiratory protective equipment. The presence of facial hair or scars that might interfere with the worker's ability to wear certain types of respirators should also be noted during the examination and in the written medical opinion.

Because of the importance of lung function to workers required to wear certain types of respirators to protect themselves from MC exposure, these workers must receive an assessment of pulmonary function before they begin to wear a negative pressure respirator and at least annually thereafter. The recommended pulmonary function tests include measurement of the employee's forced vital capacity (FVC), forced expiratory volume at one second (FEV1), as well as calculation of the ratios of FEV1 to FVC, and the ratios of measured FVC and measured FEV1 to expected respective values corrected for variation due to age, sex, race, and height. Pulmonary function evaluation must be conducted by a physician or other licensed health care professional experienced in pulmonary function tests.

The following is a summary of the elements of a physical exam which would fulfill the requirements under the MC standard:

Physical Exam

I. Skin and appendages

1. Irritated or broken skin
2. Jaundice
3. Clubbing cyanosis, edema
4. Capillary refill time
5. Pallor

II. Head

1. Facial deformities
2. Scars
3. Hair growth

III. Eyes

1. Scleral icterus
2. Corneal arcus
3. Pupillary size and response
4. Fundoscopic exam

IV. Chest

1. Standard exam

V. Heart

1. Standard exam
2. Jugular vein distension
3. Peripheral pulses

VI. Abdomen

1. Liver span

VII. Nervous System

1. Complete standard neurologic exam

VIII. Laboratory

1. Hemoglobin and hematocrit
2. Alanine aminotransferase (ALT, SGPT)
3. Post-shift carboxyhemoglobin

IX. Studies

1. Pulmonary function testing
2. Electrocardiogram

An evaluation of the oxygen carrying capacity of the blood of employees (for example by measured red blood cell volume) is considered useful, especially for workers acutely exposed to MC.

It is also recommended, but not required, that end of shift carboxyhemoglobin levels be determined periodically, and any level above 3% for non-smokers and above 10% for smokers should prompt an investigation of the worker and his workplace. This test is recommended because MC is metabolized to CO, which combines strongly with hemoglobin, resulting in a reduced capacity of the blood to transport oxygen in the body. This is of particular concern for cigarette smokers because they already have a diminished hemoglobin capacity due to the presence of CO in cigarette smoke.

C. Additional Examinations and Referrals

1. Examination by a Specialist

When a worker examination reveals unexplained symptoms or signs (i.e. in the physical examination or in the laboratory tests), follow-up medical examinations are necessary to assure that MC exposure is not

adversely affecting the worker's health. When the examining physician or other licensed health care professional finds it necessary, additional tests should be included to determine the nature of the medical problem and the underlying cause. Where relevant, the worker should be sent to a specialist for further testing and treatment as deemed necessary.

The final rule requires additional investigations to be covered and it also permits physicians or other licensed health care professionals to add appropriate or necessary tests to improve the diagnosis of disease should such tests become available in the future.

2. Emergencies

The examination of workers exposed to MC in an emergency should be directed at the organ systems most likely to be affected. If the worker has received a severe acute exposure, hospitalization may be required to assure proper medical intervention. It is not possible to precisely define ''severe,'' but the physician or other licensed health care professional's judgement should not merely rest on hospitalization. If the worker has suffered significant conjunctival, oral, or nasal irritation, respiratory distress, or discomfort, the physician or other licensed health care professional should instigate appropriate follow-up procedures. These include attention to the eyes, lungs and the neurological system. The frequency of follow-up examinations should be determined by the attending physician or other licensed health care professional. This testing permits the early identification essential to proper medical management of such workers.

D. Employer Obligations

The employer is required to provide the responsible physician or other licensed health care professional and any specialists involved in a diagnosis with the following information: a copy of the MC standard including relevant appendices, a description of the affected employee's duties as they relate to his or her exposure to MC; an estimate of the employee's exposure including duration (e.g., 15hr/wk, three 8-hour shifts/wk, full time); a description of any personal protective equipment used by the employee, including respirators; and the results of any previous medical determinations for the affected employee related to MC exposure to the extent that this information is within the employer's control.

E. Physicians' or Other Licensed Health Care Professionals' Obligations

The standard requires the employer to ensure that the physician or other licensed health care professional provides a written statement to the employee and the employer. This statement should contain the physician's or licensed health care professional's opinion as to whether the employee has any medical condition placing him or her at increased risk of impaired health from exposure to MC or use of respirators, as appropriate. The physician or other licensed health care professional should also state his or her opinion regarding any restrictions that should be placed on the employee's exposure to MC or upon the use of protective clothing or equipment such as respirators. If the employee wears a respirator as a result of his or her exposure to MC, the physician or other licensed health care professional's opinion should also contain a statement regarding the suitability of the employee to wear the type of respirator assigned. Furthermore, the employee should be informed by the physician or other licensed health care professional about the cancer risk of MC and about risk factors for heart disease, and the potential for exacerbation of underlying heart disease by exposure to MC through its metabolism to carbon monoxide. Finally, the physician or other licensed health care professional should inform the employer that the employee has been told the results of the medical examination and of any medical conditions which require further explanation or treatment. This written opinion must not contain any information on specific findings or diagnosis unrelated to employee's occupational exposures.

The purpose in requiring the examining physician or other licensed health care professional to supply the employer with a written opinion is to provide the employer with a medical basis to assist the employer in placing employees initially, in assuring that their health is not being impaired by exposure to MC, and to assess the employee's ability to use any required protective equipment.

BILLING CODE 4510–26–P

Appendix C to Section 1910.1052: Questions and Answers--Methylene Chloride Control in Furniture Stripping--

CDC
CENTERS FOR DISEASE CONTROL AND PREVENTION

NIOSH

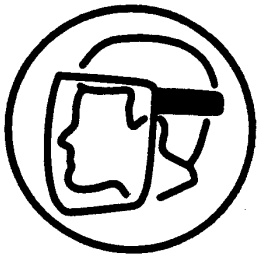

—Questions and Answers— Methylene Chloride Control in Furniture Stripping

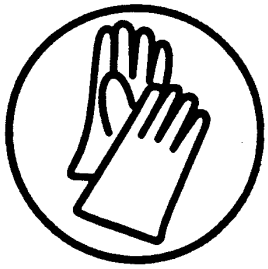

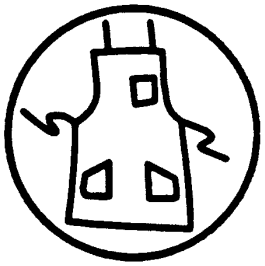

U.S. DEPARTMENT OF HEALTH AND HUMAN SERVICES
Public Health Service
Centers for Disease Control and Prevention
National Institute for Occupational Safety and Health

September 1993

Q's & A's

DISCLAIMER

Mention of any company or product does not constitute endorsement by the Centers for Disease Control and Prevention, National Institute for Occupational Safety and Health.

This document is in the public domain and may be freely copied or reprinted.

Copies of this and other NIOSH documents are available from

Publications Dissemination, DSDTT

National Institute for Occupational Safety and Health

4676 Columbia Parkway

Cincinnati, OH 45226

FAX (513) 533-8573

For information about other occupational safety and health problems, call 1-800-35-NIOSH

DHHS (NIOSH) Publication No. 93-133

Q's & A's

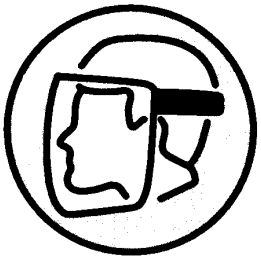

Introduction

This Pamphlet answers commonly asked questions about the hazards from exposure to methylene chloride. It also describes approaches to controlling methylene chloride exposure during the most common furniture stripping processes. Although these approaches were developed and field tested by NIOSH, each setting requires custom installation because of the different air flow interferences at each site.

What is the Stripping Solution Base?

The most common active ingredient in paint removers is a chemical called methylene chloride. Methylene chloride is present in the paint remover to penetrate, blister, and finally lift the old finish. Other chemicals in paint removers work to accelerate the stripping process, to retard evaporation, and to act as thickening agents. These other ingredients may include: methanol, toluene, acetone, or paraffin.[1]

Is Methylene Chloride Bad for Me?

Exposure to methylene chloride may cause short-term health effects or long-term health effects.

Short-Term (acute) Health Effects

Exposure to high levels of paint removers over short periods of time can cause irritation to the skin, eyes, mucous membranes, and respiratory tract. Other symptoms of high exposure are dizziness headache, and lack of coordination. The occurrence of any of these symptoms indicates that you are being exposed to high levels of the methylene chloride. At the onset of any of these symptoms, you should leave the work area, get some fresh air, and determine why the levels were high.

A portion of inhaled methylene chloride is converted by the body to carbon monoxide, which can lower the blood's ability to carry oxygen. When the solvent is used properly, however, the levels of carbon monoxide should not be hazardous. Individuals with cardiovascular or pulmonary health problems should check with their physician before using the paint stripper. Individuals experiencing severe symptoms such as shortness of breath or chest pains should obtain proper medical care immediately.[2]

Long-term (Chronic) Health Effects

Methylene chloride has been shown to cause cancer in certain laboratory animal tests. The available human studies do not provide the necessary information to determine whether methylene chloride causes cancer in humans. However, as a result of the animal studies, methylene chloride is

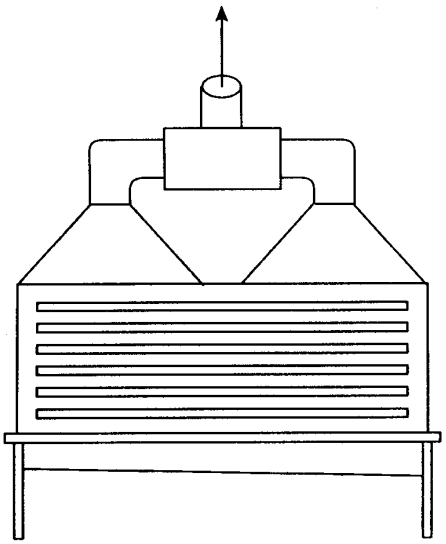

Figure 1 — Slot Hood

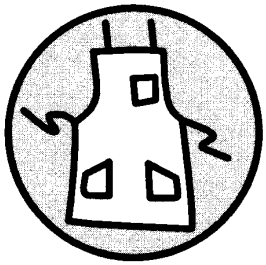

Q's & A's

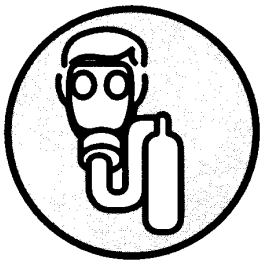

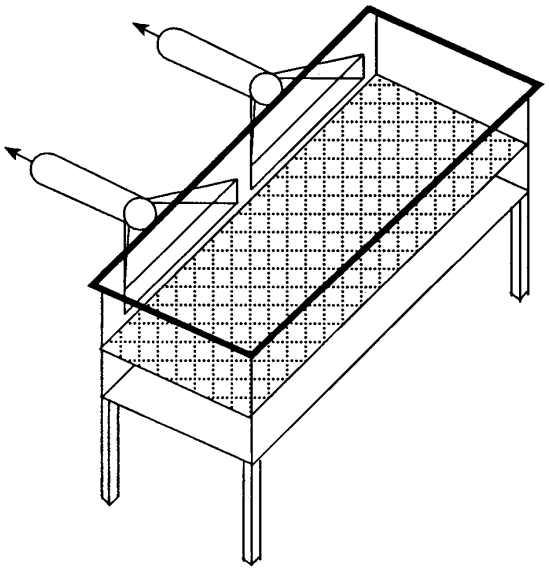

Figure 2 — Downdraft Hood

considered a potential occupational carcinogen. There is also considerable indirect evidence to suggest that workers exposed to methylene chloride may be at increased risk of developing ischemic heart disease. Therefore, it is prudent to minimize exposures to solvent vapors.[3]

What Do Federal Agencies Say About Methylene Chloride?

In 1991, the Occupational Safety and Health Administration published a Notice of Proposed Rulemaking for methylene chloride. The proposed standard would establish an eight-hour time-weighted average exposure limit of 25 parts per million (ppm), as well as a short-term exposure limit of 125 ppm determined from a 15 minute sampling period. That is a sharp reduction from the current limit of 500 ppm. The proposed standard would also set a 12.5 ppm action level (a level that would trigger periodic exposure monitoring and medical surveillance provisions.[4]

The National Institute for Occupational Safety and Health recommends that methylene chloride be regarded as a "potential occupational carcinogen." NIOSH further recommends that occupational exposure to methylene chloride be controlled to the lowest feasible limit. This recommendation was based on the observation of cancers and tumors in both rats and mice exposed to methylene chloride in air.[5]

How Can I Be Exposed to Methylene Chloride while Stripping Furniture?

Methylene chloride can be inhaled when vapors are in the air. Inhalation of the methylene chloride vapors is generally the most important source of exposure. Methylene chloride evaporates quicker than most chemicals. The odor threshold of methylene chloride is 300 ppm.[6] Therefore, once you smell methylene chloride, you are being over-exposed. Pouring, moving, or stirring the chemical will increase the rate of evaporation.

Methylene chloride can be absorbed through the skin either by directly touching the chemical or through your gloves. Methylene chloride can be swallowed if it gets on your hands, clothes, or beard, or if food or drinks become contaminated.

How Can Breathing Exposures be Reduced?

Install a Local Exhaust Ventilation System

Local exhaust ventilation can be used to control exposures. Local exhaust ventilation systems

capture contaminated air from the source before it spreads into the workers' breathing zone.[7] If engineering controls are not effective, only a self-contained breathing apparatus equipped with a full facepiece and operated in a positive-pressure mode or a supplied-air respirator affords the necessary level of protection. Air-purifying respirators such as organic vapor cartridges can only be used for escape situations.[8]

A local exhaust system consists of the following: a hood, a fan, ductwork, and a replacement air system.[9,10,11] Two processes are commonly used in furniture stripping: flow-over and dip tanks. For flow-over systems there are two common local exhaust controls for methylene chloride — a slot hood and a downdraft hood. A slot hood of different design is most often used for dip tanks. (See Figures 1, 2, and 3)

The hood is made of sheet metal and connected to the tank. All designs require a centrifugal fan to exhaust the fumes, ductwork connecting the hood and the fan, and a replacement air system to bring conditioned air into the building to replace the air exhausted.

In constructing or designing a slot or downdraft hood, use the following data:

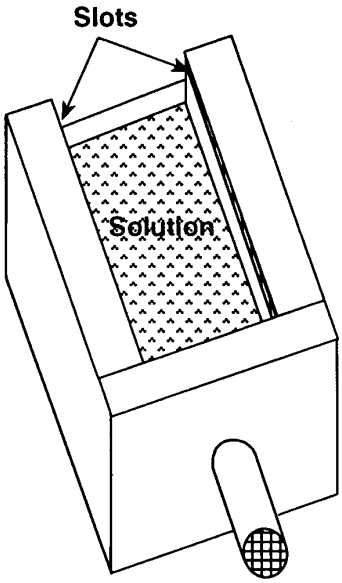

Figure 3 — Slot Hood for Dip Tank

Slot hood (Figure 1)

- At least 2200 cfm per 8' X 4' tank
- 1 - 2 inch slots
- Slot velocity - 1000 fpm
- 3 - 5 slots
- Plenum at least 1 foot deep

Downdraft hood (Figure 2)

- At least 1600 cfm per 8' X 4' tank
- Plenum at least 9" deep

Slot hood for Dip Tank (Figure 3)

- At least 2900 cfm per 8' X 4' tank
- 3/4" slot that runs the length of the front and back of the tank
- Slot velocity — 3200 fpm
- Plenum on the sides of the tank should be 6" deep by 36" long
- 12" duct leads from the center of the front plenum to the fan

Safe work practices

Workers can lower exposures by decreasing their access to the methylene chloride.[12]

1) Turn on dip tank control system several minutes before entering the stripping area.

2) Avoid unnecessary transferring or moving of stripping solution.

3) Keep face out of the air stream between the solution-covered furniture and the exhaust system.

4) Keep face out of vapor zone above the stripping solution and dip tank.

5) Retrieve dropped items with a long handled tool.

6) Keep the solution-recycling system off when not in use. Cover reservoir for recycling system.

7) Cover dip tank when not in use.

8) Provide adequate ventilation for rinse area.

Q's & A's

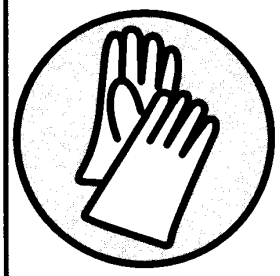

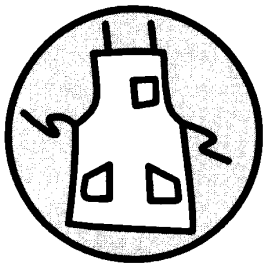

Q's & A's

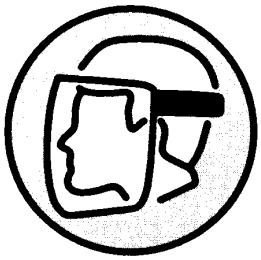

How Can Skin Exposures be Reduced?

Skin exposures can be reduced by wearing gloves whenever you are in contact with the stripping solution.[13]

1) Two gloves should be worn. The inner glove should be made from polyethylene/ethylene vinyl alcohol (e.g. Silver Shield®, or 4H®). This material, however, does not provide good physical resistance against tears, so an outer glove made from nitrile or neoprene should be worn.

2) Shoulder-length gloves will be more protective.

3) Change gloves before the break-through time occurs. Rotate several pairs of gloves throughout the day. Let the gloves dry in a warm well ventilated area at least over night before reuse.

4) Keep gloves clean by rinsing often. Keep gloves in good condition. Inspect the gloves before use for pin-holes, cracks, thin spots, and stiffer than normal or sticky surfaces.

5) Wear a face shield or goggles to protect face and eyes.

What Other Problems Occur?

Stripping Solution Temperature

Most manufacturers of stripping solution recommend controlling the solution to a temperature of 70°F. This temperature is required for the wax in the solution to form a vapor barrier on top of the solution to keep the solution from evaporating too quickly. If the temperature is too high, the wax will not form the vapor barrier. If it is too cold, the wax will solidify and separate from the solvent causing increased evaporation. Use a belt heater to heat the solution to the correct temperature. Call your solution manufacturer for the correct temperature for your solution.[14]

Make-Up Air

Air will enter a building in an amount to equal the amount of air exhausted whether or not provision is made for this replacement. If a local exhaust system is added a make-up or replacement air system must be added to replace the air removed. Without a replacement air system, air will enter the building through cracks causing uncontrollable eddy currents. If the building perimeter is tightly sealed, it will prevent the air from entering and severely decrease the amount exhausted from the ventilation system. This will cause the building to be under negative pressure and decrease the performance of the exhaust system.[15]

Dilution Ventilation

With general or dilution ventilation, uncontaminated air is moved through the workroom by means of fans or open windows, which dilutes the pollutants in the air. Dilution ventilation does not provide effective protection to other workers and does not confine the methylene chloride vapors to one area.[16]

Phosgene Poisoning from Use of Kerosene Heaters

Do not use kerosene heaters or other open flame heaters while stripping furniture. Use of kerosene heaters in connection with methylene chloride can create lethal or dangerous concentrations of phosgene. Methylene chloride vapor is mixed with the air used for the combustion of kerosene in kerosene stoves. The vapor thus passes through the flames, coming into close contact with carbon monoxide at high temperatures. Any chlorine formed by decomposition may, under these conditions, react with carbon monoxide and form phosgene.[17]

REFERENCES

[1] Halogenated Solvents Industry Alliance and Consumer Product Safety Commission [1990]. Stripping Paint from Wood (Pamphlet for consumers on how to strip furniture and precautions to take). Washington DC: Consumer Product Safety Commission.

[2] *Ibid.*

[3] NIOSH [1992]. NIOSH Testimony on Occupational Safety and Health Administration's proposed rule on occupational exposure to methylene chloride, September 21, 1992, OSHA Docket No. H-71. NIOSH policy statements. Cincinnati, OH: U.S. Department of Health and Human Services, Public Health Service, Centers for Disease Control, National Institute for Occupational Safety and Health.

[4] 56 Fed. Reg. 57036 [1991]. Occupational Safety and Health Administration: Proposed rule on occupational exposure to methylene chloride.

[5] NIOSH [1992].

[6] Kirk, R.E. and P.F. Othmer, Eds. [1978]. Encyclopedia of Chemical Technology, 3rd Ed., Vol. 5:690. New York: John Wiley & Sons, Inc.

[7] ACGIH [1988]. Industrial Ventilation: A Manual of Recommended Practice. 20th Ed. Cincinnati, OH: American Conference of Governmental Industrial Hygienists.

[8] NIOSH [1992].

[9] Fairfield, C.L. and A.A. Beasley [1991]. In-depth Survey Report at the Association for Retarded Citizens, Meadowlands, PA. The Control of Methylene Chloride During Furniture Stripping. Cincinnati, OH: U.S. Department of Health and Human Services, Public Health Service, Centers for Disease Control, National Institute for Occupational Safety and Health.

[10] Fairfield, C.L. [1991]. In-depth Survey Report at the J.M. Murray Center, Cortland, NY. The Control of Methylene Chloride During Furniture Stripping. Cincinnati, OH: U.S. Department of Health and Human Services, Public Health Service, Centers for Disease Control, National Institute for Occupational Safety and Health.

[11] Hall, R.M., K.F. Martinez, and P.A. Jensen [1992]. In-depth Survey Report at Tri-County Furniture Stripping and Refinishing, Cincinnati, OH. The Control of Methylene Chloride During Furniture Stripping. Cincinnati, OH: U.S. Department of Health and Human Services, Public Health Service, Centers for Disease Control, National Institute for Occupational Safety and Health.

[12] Fairfield, C.L. and A.A. Beasley [1991]. In-depth Survey Report at the Association for Retarded Citizens, Meadowlands, PA. The Control of Methylene Chloride During Furniture Stripping. Cincinnati, OH: U.S. Department of Health and Human Services, Public Health Service, Centers for Disease Control, National Institute for Occupational Safety and Health.

[13] Roder, M. [1991]. Memorandum of March 11,1991 from Michael Roder of the Division of Safety Research to Cheryl L. Fairfield of the Division of Physical Sciences and Engineering, National Institute for Occupational Safety and Health, Centers for Disease Control, Public Health Service, U.S. Department of Health and Human Services.

[14] Kwick Kleen Industrial Solvents, Inc. [1981]. Operations Manual, Kwick Kleen Industrial Solvents, Inc., Vincennes, IN.

[15] ACGIH [1988].

[16] *Ibid.*

[17] Gerritsen, W.B. and C.H. Buschmann [1960]. Phosgene Poisoning Caused by the Use of Chemical Paint Removers containing Methylene Chloride in Ill-Ventilated Rooms Heated by Kerosene Stoves. British Journal of Industrial Medicine *17* :187.

Q's & A's

Where Should I go for More Information?

The NIOSH 800- number is a toll-free technical information service that provides convenient public access to NIOSH and its information resources. Callers may request information about any aspect of occupational safety and health.

1-800-35-NIOSH
(1-800-356-4674)

☆ U.S. GOVERNMENT PRINTING OFFICE: 1993: 550-147/80026

BILLING CODE 4510–26–C

PART 1915—[AMENDED]

6. The authority citation for 29 CFR part 1915 continues to read as follows:

Authority: Sec. 41, Longshore and Harbor Workers Compensation Act (33 U.S.C. 941); secs. 4, 6, 8, Occupational Safety and Health Act of 1970 (29 U.S.C. 653, 655, 657); Secretary of Labor's Order No. 12–71 (36 FR 8754), 8–76 (41 FR 25059), 9–83 (48 FR 35736) or 1–90 (55 FR 9033), as applicable; 29 CFR part 1911.

7. In Table Z of section 1915.1000, *Air Contaminants*, the entire entry for methylene chloride is removed and replaced with the following entry added in the substance column: ''Methylene chloride: see § 1910.1052''.

8. Subpart Z of part 1915 is amended by adding § 1915.1052, as follows:

§ 1915.1052 Methylene chloride.

Note: The requirements applicable to shipyard employment under this section are identical to those set forth at 29 CFR 1910.1052.

PART 1926—[AMENDED]

Subpart D—[Amended]

9. The authority citation for subpart D of part 1926 continues to read as follows:

Authority: Sec. 107, Contract Work Hours and Safety Standards Act (40 U.S.C. 333), secs. 4, 6, and 8, Occupational Safety and Health Act of 1970 (29 U.S.C. 653, 655, 657); Secretary of Labor's Orders No. 12–71 (36 FR 8754), 8–76 (41 FR 25059), 9–83 (48 FR 35736), or 1–90 (55 FR 9033), as applicable.

10. In Appendix A of section 1926.55, *Gases, vapors, fumes, dusts and mists*, the entire entry for methylene chloride is removed and replaced by the following entry added in the substance column: ''Methylene chloride: see § 1910.1052''.

Subpart Z—[Amended]

11. The authority citation for subpart Z of part 1926 continues to read as follows:

Authority: Secs. 6 and 8, Occupational Safety and Health Act (29 U.S.C. 655, 657); section 41, Secretary of Labor's Orders Nos. 12–71 (36 FR 8754), 8–76 (41 FR 25059), 9–83 (48 FR 35736), or 1–90 (55 FR 9033), as applicable; and 29 CFR part 1911.

12. Subpart Z of part 1926 is amended by adding § 1926.1152, as follows:

§ 1926.1152 Methylene chloride.

Note: The requirements applicable to construction employment under this section are identical to those set forth at 29 CFR 1910.1052.

[FR Doc. 97–198 Filed 1–9–97; 8:45 am]

BILLING CODE 4510–26–P

federal register

Friday
January 10, 1997

Part III

Department of Transportation

Coast Guard

33 CFR Part 157

Structural Measure to Reduce Oil Spills From Existing Tank Vessels Without Double Hulls; Final Rule

DEPARTMENT OF TRANSPORTATION

Coast Guard

33 CFR Part 157

[CGD 91–045c]

RIN 2115–AF27

Structural Measures to Reduce Oil Spills From Existing Tank Vessels Without Double Hulls

AGENCY: Coast Guard, DOT.

ACTION: Final rule.

SUMMARY: This final rule represents the last phase in the Coast Guard's three-phased effort to establish economically and technologically feasible structural and operational measures to reduce the threat of oil spills from tank vessels without double hulls, as required by the Oil Pollution Act of 1990. No structural measures are contained in this final rule because the Coast Guard has determined that there are no interim structural measures that are both technologically and economically feasible for existing tank vessels without double hulls.

DATES: This final rule is effective February 10, 1997.

ADDRESSES: Unless otherwise indicated, documents referenced in this preamble are available for inspection or copying at the office of the Executive Secretary, Marine Safety Council (G–LRA/3406), U.S. Coast Guard Headquarters, 2100 Second Street SW., room 3406, Washington, DC 20593–0001, between 9:30 a.m. and 2 p.m., Monday through Friday, except Federal holidays. The telephone number is (202) 267–1477.

FOR FURTHER INFORMATION CONTACT: LCDR Suzanne Englebert, Project Manager, Project Development Division, at (202) 267–6490.

SUPPLEMENTARY INFORMATION:

Regulatory History

Section 4115(b) of the Oil Pollution Act of 1990 (OPA 90) directs the Coast Guard to develop structural or operational requirements for tank vessels of 5,000 gross tons (GT) or more without double hulls that will serve as regulations until the year 2015. After 2015, all tank vessels operating in U.S. waters will be required to have double hulls under section 4115(a) of OPA 90 (46 U.S.C. 3703a). Regulations issued under the authority of section 4115(b) must provide as substantial protection to the environment as is economically and technologically feasible. A detailed review of structural measure issues, as they pertain to the Congressional mandates of OPA 90, appears in the supplemental notice in proposed rulemaking (SNPRM) entitled ''Structural Measures to Reduce Oil Spills from Existing Tank Vessels without Double Hulls'' published on December 28, 1995 (60 FR 67226).

This final rule represents the final phase of the Coast Guard's three-phased effort to reduce oil pollution from certain existing tank vessels. The first phase was completed on August 5, 1994, by issuing a final rule entitled ''Emergency Lightering Equipment and Advanced Notice of Arrival Requirements for Existing Tank Vessels Without Double Hulls'' (59 FR 40186), which requires the carriage of emergency lightering equipment and the inclusion of the vessel's International Maritime Organization number in the advance notice of arrival report. The second phase was completed on July 30, 1996, by issuing a separate final rule entitled ''Operational Measures to Reduce Oil Spills from Existing Tank Vessels without Double Hulls'' (61 FR 39769). That rule, which focused on reducing the risk of groundings, collisions, or fires, requires existing tank vessels without double hulls to comply with certain operational measures until the year 2015.

To complete the third phase, the Coast Guard evaluated several different structural measures to determine their economical and technological feasibility. Such measures included retrofitting double bottoms or sides, implementing hydrostatic balance loading (HBL) for all vessel configurations, and restricting certain existing tanks from carrying cargo or retrofitting spaces so that they are located protectively around tanks carrying oil as cargo. As a result of further economic cost-benefit analysis and the comments on the SNPRM, the Coast Guard is not requiring structural measures. The Coast Guard has determined that structural measures are not economically feasible and that the measures required under phase one and two of this rulemaking meet the Congressional mandate of OPA 90 section 4115(b).

Discussion of Comments

Background information on proposed structural measures for existing vessels without double hulls is provided in the preambles to the advanced notice of proposed rulemaking (56 FR 56284; November 1, 1991), the notice of proposed rulemaking (58 FR 54870; October 22, 1993), and the SNPRM (60 FR 67226; December 28, 1995). The Coast Guard received a total of 29 letters on the SNPRM. These letters addressed several issues and presented more than 180 comments. Twelve comments supported operational measures and two comments supported emergency lightering measures as finalized. The remaining comments discussed issues related to reducing oil outflow after an accident occurs on an existing tank vessel and are addressed in the following sections. All comments received on this rulemaking are available for inspection in docket [CGD 91–045c] at the address listed under **ADDRESSES**. For the purposes of this preamble discussion, the term ''single-hull'' means an existing tank vessel without a double hull. Pre-MARPOL vessels are defined as vessels that are not required to meet the pollution prevention requirements of the 1973 International Convention for the Prevention of Pollution from Ships (MARPOL 73). MARPOL 73/78 vessels are defined as vessels that meet the requirements of the MARPOL 73 convention and vessels that meet the MARPOL 73 convention as amended by the 1978 Protocol (MARPOL 78). The term ''Regulation 13G'' refers to Regulation 13G of Annex I of MARPOL 73 as amended by the 1978 Protocol.

I. Applicability

Twenty-three comments pertained to the application of structural measures. Nine comments made general remarks on the applicability of structural measures and the OPA 90 mandated phase-out schedule's relationship to the implementation of structural measures. The remaining comments suggested that the Coast Guard exempt various types of vessels from the application of structural measures.

Two comments shared the opinion that the current OPA 90 phase-out schedule effectively creates an orderly transition to a future double-hull fleet, thus making additional measures unnecessary. One of these comments specifically noted that tank barges, in particular, would accrue no benefit from structural measures due to impending OPA 90 phase-outs. A separate comment agreed that the Coast Guard should maintain OPA 90 phase-out dates, but did not request that vessels be excluded from the application of structural measures or that structural measures not be required.

Five comments recommended that the Coast Guard require structural measures for all existing tank vessels, including non-petroleum oil carriers and tank barges. The comments stated that non-petroleum carriers may periodically transport petroleum and that non-petroleum oil spills pose an equal or greater risk to the environment as petroleum oil spills. In addition, the comments claimed that standards

should be uniform throughout industry to encourage equal competition and an even distribution of costs.

Two comments suggested alternatives to the broad application of structural measures. One comment encouraged the use of company historical performance as a basis for requiring implementation of structural measures. For example, the comment claimed that companies with a history of minimal oil spillage should not be required to implement structural measures to the same degree as frequent offenders. The second comment recommended that the Coast Guard establish an enforceable performance standard, as opposed to a one-size-fits-all approach, for the implementation of specific measures to ensure a high degree of spill prevention.

During this rulemaking, the Coast Guard extensively researched the cost and benefit of requiring a multitude of measures on single-hull tankships and tank barges prior to their phase-out dates. No tank barge or tankship company commented that their sole cargo carriage consisted on non-petroleum products. Consequently, all tank vessels, including those with the ability to transport non-petroleum products for one charter and change to carrying petroleum products for the next, were considered for this rulemaking.

The anticipated cost to single-hull tank vessels until 2015, or their phase-out dates, was strictly taken into account for this final rule assessment. The OPA 90 phase-out dates and current differences between U.S. and international fleet pollution prevention requirements were also considered in the cost and benefit analysis. Because this rulemaking addresses out-flow prevention measures typically requiring architectural or loading changes, and not human performance factors that are usually the reason for a company's lower spill record, the Coast Guard did not consider equivalencies or exemptions based on individual company performance.

Several comments claimed vessels trading at deepwater ports or offshore lightering zones should be exempt from the application of structural measures because most already operate with protection adequate for trading in these low risk areas and would experience no benefit from the use of structural measures. Other comments requested exemptions for vessels carrying non-petroleum oil or product cargo because most are already equipped with double bottoms and pose an insignificant risk to the environment. Comments also recommended excluding all tank vessels equipped with double bottoms from the implementation of structural measures since these already have the ability to reduce oil outflow due to grounding incidents. Comments suggested that spill response tank barges, which transport oil for a limited purpose only, be held to lower standards than structural measures for routine oil carriers. In addition, several comments requested that clean product tankers less than 30,000 deadweight tons (dwt) be exempt from structural measures because spillage from these vessels has historically proven to be less damaging and less difficult to contain than spills from other vessels. Finally, some comments claimed that vessels which meet the requirements of MARPOL 78, should be exempt from these requirements because they already meet the highest international standards.

Vessels that are solely engaged in oil spill response are already exempt from the structural measures required by 33 CFR 157.08. Vessels operating at deepwater ports, offshore lightering zones, and those vessels fitted with double bottoms were considered in this rulemaking because, although groundings are less frequent, collisions and structural failures remain potential hazards. Non-petroleum carrying vessels were included in this rulemaking because the Coast Guard has determined that bulk spills of animal fat, vegetable oil, and other non-petroleum oil can be damaging to the environment. The cost and benefit of applying structural measures to single-hull tank vessels were separately identified by deadweight tonnage categories in this final rule regulatory assessment to determine if tank vessels, such as those product carriers operating at 30,000 dwt or less, were disproportionately affected. MARPOL 73/78 vessels were also considered separately in the regulatory analysis for this final rule to ensure anticipated benefits from any structural measures accurately reflected their currently pollution prevention construction.

Several comments requested exemption of specific vessels from implementation of HBL because it is not technically feasible for their operation. Specific vessels included: Type 2 Bulk Chemical/Integrated Cargo parcel tankers, which encounter difficulties in implementing HBL when dealing with heterogeneous cargoes; and vessels engaged in multi-port voyages, due to problems resulting from the implementation of HBL multiple times during a single voyage.

The Coast Guard agrees that the difficulty of implementing HBL directly correlates with cargo variety and discharge schedules. The technical feasibility analysis for the structural measures SNPRM assumed tank vessels were carrying homogeneous cargoes and had limited off-loads. Small tankships, such as parcel tankers and vessels making multiple port discharges, have valid concerns about the practical application of HBL to their operations, and would most likely incur voyage delays or higher cargo shutout rates than originally assumed in the SNPRM for HBL. The regulatory assessment for this final rule analyzed the effect that HBL, assuming a higher cargo shutout cost and expense of delayed operations for a product or parcel tankship, would have on the cost-benefit ratio.

2. Consistency With International Standards

The Coast Guard received 12 comments expressing support for the development or adoption of regulations that are equivalent to international standards such as Regulation 13G and International Maritime Organization (IMO) standards. Arguments in favor of harmonization included concerns that country-specific legislation would be difficult for industry to implement, and would introduce technical risks and disproportionate costs. Another comment specifically noted that the combination of protectively located void spaces (PL/Spaces) and HBL analyzed in the SNPRM would be too expensive and complex to implement. Consequently, the comment recommended adoption of Regulation 13G because it permits use of HBL or PL/Spaces on an individual basis. Another comment stated that a requirement to fit PL/Spaces would be onerous to the international fleet because it affects a vessel's ability to trade, unlike HBL, even when not trading in U.S. waters.

Other comments encouraged the Coast Guard to work in cooperation with the IMO to ensure high standards of environmental performance for all newly-built tank vessels. One comment also encouraged the Coast Guard to consider enforcement issues when preparing a structural measures regulation, stressing the importance of maintaining competition on an equal level.

In contrast, only one comment disagreed that uniformity would be achieved by drafting measures commensurate with international standards. This comment reasoned that, theoretically, Regulation 13G and OPA 90 express somewhat opposing objectives, since Regulation 13G works to extend the operating life of single-hull vessels, while OPA 90 limits the operating life of single-hull vessels by setting a maximum retirement date.

Consequently, it was suggested that other options be considered, including an alternative PL/Space configuration that splits the protected area between the side and bottom of the vessel.

The Coast Guard's goal is to implement its statutory mandates in regulations that are consistent with international standards wherever doing so is lawful, appropriate, and practical. Based on comments from the SNPRM, the Coast Guard considered adoption of international regulations including Regulation 13G, as well as other requirements not presently required by IMO. However, based on the revised cost and benefit analysis of these structural measures for existing tank vessels, the Coast Guard has determined that no measures, international or otherwise, are economically feasible.

3. Congressional Intent

Four comments argued that Congress directed the Coast Guard to consider implementation of both structural and operational measures for existing tank vessels without double hulls, but did not require the adoption of both types of measures. Three of the four comments also stated that no structural measures are required to be implemented unless they are both economically and technologically feasible. Another comment stated that Congress mandated strict standards to protect our nation's waters, obligating the Coast Guard to develop measures that closely approximate the protective effect of double hulls on single-hull tank vessels.

The Coast Guard has done extensive research on the requirements of section 4115(b) of OPA 90, including an analysis of the Congressional guidance offered for its implementation. The three final rules promulgated under CGD 91–045 make up a comprehensive evaluation of section 4115(b) that implements those measures the Coast Guard deems are both economically and technologically feasible as required by law.

4. Alternative Measures and Economic Incentives

The Coast Guard received five comments that encouraged the adoption of alternative systems to reduce oil outflow. One comment recommended that intermediate oil tight decks (IOTD) be required or offered as an equivalent measure for compliance with structural measures. The comment challenged the Coast Guard's refusal to consider IOTD on the basis of its alleged failure to meet the benchmark equivalency for alternative compliance found in Regulation 13G. The comment argued that the Coast Guard's interpretation of the Regulation 13G standards was misleading and incorrect as it pertained to IOTD. According to the comment, the estimated installation costs for IOTD, $2 million per vessel, would be approximately identical to fitting PL/Spaces. However, the comment asserted that cargo shutout amounts would vary from 2 percent for an IOTD equipped tanker to 19 percent for a tankship fitted with PL/Spaces. The comment also contended that the IOTD concept should be considered equivalent to a double hull.

The basis of the Coast Guard's determination of appropriate alternative measures for single-hull tank vessels in this final rule remains as stated in the SNPRM: the alternative must be approved by IMO's Marine Environment Protection Committee (MEPC) as an alternative structural arrangement meeting the requirements of Regulation 13G. Although IMO has accepted the concept of IOTD as a method for complying with the HBL alternative to Regulation 13G, this acceptance was not the only factor considered for this rulemaking. This final rule's regulatory assessment found that PL/Spaces, a combination of PL/Spaces and HBL, and HBL alone are all economically infeasible for pre-MARPOL tank vessels. A separate analysis using the IOTD shutout estimate of 2 percent and the refit costs of fitting PL/Spaces over 30 percent of the cargo tank area revealed that even with the reduced cargo shutout of IOTD, the cost-benefit of such a measure is not economically feasible. Calculations from this analysis estimated that the cost-benefit of implementing IOTD for vessels operating on U.S. coastal voyages ranged from $62,200 to $211,000, and from $32,200 to $159,300 per barrel of unspilled oil on those vessels operating on international voyages. The Coast Guard estimates that these ranges are a conservative representation of the IOTD's cost-benefit because the cost of fitting IOTD for the entire cargo area would be substantially higher than the cost of fitting bulkheads or double bottoms over 30 percent of the cargo area. The determination of equivalency between IOTD and a double hull is outside the scope of this rulemaking.

Another comment suggested that the Coast Guard adopt the American Underpressure System. This comment claimed that this inert gas controlled system dynamically controls the underpressure in the tank ullage space and would prevent oil spills above the line of rupture. This comment reasoned that since the Coast Guard has endorsed HBL and PL/Spaces it should also accept alternative concepts, such as the American Underpressure System, that are similarly effective and result in comparable levels of risk regardless of IMO approval. According to the comment, the American Underpressure System is comparable in performance to the double hull, is significantly more effective than either HBL or PL/Spaces, and introduces no unmanageable risks. The comment estimated that the cost of implementing the American Underpressure System would be between 1 and 1.5 percent of the construction cost required to build a new single-hull tanker, while the cost to install a double hull would be between 30 to 40 percent of the construction cost required to build a new single-hull tanker. In addition, the comment claimed that the out-of-service time to retrofit the American Underpressure System was 1 to 3 weeks, compared to the 6 to 12 months typically required to install a double hull. Considering the loss of cargo capacity that would result from the installation of the double hull, as well as the comparison between the refit cost and out-of-service time required for the implementation of both measures, this comment concluded that no quantitative support exists to exclude the American Underpressure System as a viable alternative measure.

While underpressure systems could be less costly than PL/Spaces or HBL, they were not included in the regulatory assessment for this final rule because they have not been approved by IMO as an alternative to comply with Regulation 13G. Underpressure systems were specifically examined and discussed by IMO. These systems were expressly rejected by IMO due to various safety concerns.

Two comments recommended that the Coast Guard require emergency transfer systems (ETS). Another comment suggested that the Coast Guard develop industry-wide economic incentives that encourage companies to employ spill-reduction measures such as effective combinations of PL/Spaces and HBL prior to the regulatory phase-in dates and to engage in further development of promising new measures such as Underpressure Systems and ETS.

While ETS could be less costly than PL/Spaces or HBL, they were not included in the regulatory assessment for this final rule because they have not been approved by IMO as an alternative to comply with Regulation 13G and there are indications that, in some instances, they may be unsafe. The Coast Guard is using IMO approval of Regulation 13G alternatives as a benchmark because it provides international consistency as well as

general operational and safety requirements. Alternative measures creating conditions such as exposure of the tankship to stress, creation of fire or explosion hazards, stability considerations, and loading requirements are not approved by IMO. The Coast Guard's 1995 report to Congress entitled, ''The Feasibility of Using Segregated Ballast Tanks (SBT) for Emergency Transfer of Cargo and Storage of Recovered Oil,'' concludes that when a vessel casualty occurs, fundamental changes in the vessel's stability often result. These stability changes make it potentially unsafe and inadvisable to use SBT for the emergency transfer of cargo. The Coast Guard did not consider an economic incentive program because it is beyond the scope of this rulemaking and Section 4115(b) does not provide the authority for incentives.

5. Phase-In Alternatives

The Coast Guard received 15 comments on phase-in alternatives. Four comments claimed they could meet the 3-year phase-in period in the SNPRM, but would rather have one of the following options: (1) A phase-in period commencing no earlier than the date of a tank vessel's first scheduled dry docking following issuance of the final rule; (2) a requirement for industry to begin compliance in 1997 at a vessel's next scheduled dry dock, but no later than the year 2000; (3) a phase-in period no earlier than 1999 to 2001 for PL/Spaces to avoid substantial economic hardships on U.S. coastwise crude trading resulting from reduced cargo-carrying capacity; or (4) a phase-in for PL/Spaces at the vessel's next scheduled or emergency dry docking period, or at the next Certificate of Inspection renewal following issuance of the final rule, if dry docking is not required. Another comment urged the Coast Guard to delay the implementation of structural measures until at least 2000, which is the time when pre-MARPOL tank vessels reaching 25 years of age are required to comply with international standards. This comment explained that if the implementation dates were delayed, it would be easier for industry to meet the requirements, and, in addition, the Coast Guard would not have to account for the cost of implementing structural measures on these vessels in its final rule regulatory assessment. Another comment did not express support for structural measures, but suggested a standardized implementation period for domestic and foreign fleets.

In contrast, five comments strongly urged the Coast Guard to implement structural measures immediately. Two of these comments limited their request to the implementation of HBL only, while another recognized the potential for delays in implementing structural measures on the pre-MARPOL fleet. One comment claimed that companies presently operating double-hull tank vessels are already providing higher levels of environmental protection, and consequently, are suffering economic penalties because single-hull tank vessels are still operating. Another comment alleged that the Coast Guard has failed to provide substantial protection to the environment by neglecting to promulgate a rulemaking within the deadlines established by OPA 90 and has harmed the public.

The Coast Guard has taken action to implement interim measures for existing tank vessels by issuing regulations for emergency lightering equipment and advanced notice of arrival requirements (59 FR 40186; August 5, 1994), and operational measures (61 FR 39769; July 30, 1996). These efforts reduce the risk of oil discharges from existing single-hull tank vessels. In order to ensure the equal consideration of economic burden on each facet of the industry, this final rule did not consider a staggered implementation schedule across the single-hull fleet. The regulatory assessment for this final rule analyzes the costs and benefits of implementing HBL on MARPOL as well as pre-MARPOL vessels starting in 1997. The assessment also considers implementation of PL/Spaces with ballast on pre-MARPOL vessels starting in 1997, assuming completion by 2000. The Coast Guard notes the comment pertaining to the OPA 90 deadline.

6. Increased Potential for Environmental Harm

The Coast Guard received a total of 17 comments suggesting that the implementation of structural measures would lead to a greater risk of oil outflow, resulting in an increased risk of environmental harm. Eight comments attributed the greater environmental risk to the reduction in cargo capacity. Reduced cargo capacity would lead to more vessels or voyages necessary to transport cargo, thus increasing tank vessel traffic. Increased tank vessel traffic would create a greater potential for accidents, in opposition to the objectives of OPA 90.

Six comments claimed that complications resulting from physical structural modifications would increase the risk of vessel damage and instability, eventually leading to a greater probability of structural failure. The three remaining comments suggested that the implementation of structural measures would pose an increase in safety hazards for vessel personnel.

Estimated cargo shutout from measures similar to Regulation 13G revealed that the resultant increase in the tank vessel traffic would be about 12 percent. This represents an approximate 2 percent increase in the total U.S. port deep draft traffic volume. The Coast Guard assumes that this small increase in traffic volume would be offset by the accident reduction measures implemented through operational measures. The Coast Guard agrees that some measures studied would modify the distribution of hull girder stresses and shear forces. In some instances, vessel owners may have to conduct additional structural analyses to determine how these stresses change the vessel's structural integrity. In those cases where the stresses would not be within allowable tolerances, additional structural safeguards such as swash bulkheads may be required. In the cost analysis for this final rule, refitting expense was considered for all measures, including HBL on MARPOL tankships. The Coast Guard recognizes that material stresses on a vessel's hull can develop due to hot work, specifically from the marriage of large areas of new metal to existing plate or framing. In some cases, this type of material stress has contributed to structural failure. If however, proper shipyard procedures are followed and there is thorough oversight of vessel construction or refits by the Coast Guard inspectors or classification societies, material stresses can be prevented. Corrosion damage due to converting cargo tanks to ballast tanks is valid and the cost to coat tanks has been considered in the regulatory assessment for this final rule. The Coast Guard disagrees with the claim that structural measures would pose a safety hazard for vessel personnel. Oil outflow reduction measures are incorporated directly into the vessel's design or provide passive protection with little human interface.

7. State Regulation

The Coast Guard received four comments regarding Federalism issues. Two comments urged the Coast Guard to unambiguously declare that regulations promulgated for structural measures preempt State laws to avoid confusion arising from many independent laws. In contrast, two remaining comments strongly recommended that the Coast Guard declare that Federal law does not preempt State law on structural measures. The Coast Guard believes the clear and manifest purpose of Congress

is to confer upon the Federal government, through the Coast Guard, the exclusive authority to set structural standards for vessels to protect the environment from harm. The Coast Guard has determined that no additional structural measures are required for single-hull tank vessels. Nevertheless, the Coast Guard believes that States are precluded from imposing structural measures on tank vessels operating in interstate or foreign commerce.

8. Technical Feasibility of PL/Spaces and HBL

Seven comments addressed implications of required implementation of PL/Spaces. One comment suggested that the Coast Guard consider alternative PL/Space configurations such as splitting the protected area between the vessel's side and bottom as an option. Another between the vessel's side and bottom as an option. Another comment encouraged the Coast Guard to conduct further studies on potential PL/Space configurations prior to mandating MARPOL requirements for the sake of uniformity. In addition, another comment recommended that the Coast Guard designate the location of PL/Spaces to ensure all vessels have the same built-in protection. One comment specifically urged the Coast Guard not to require PL/Spaces as this modification would lead to a greater demand on the ship-building industry, resulting in the production of inferior vessels. In contrast, one comment asserted that PL/Spaces are technologically feasible and recommended that PL/Spaces be required on all single-hull vessels.

For most tank vessel designs, the most technologically feasible place to install PL/Spaces is in the tankship's midbody. However, due to unique design considerations and the need to vary a vessel's draft or cargo-carrying capacity, the Coast Guard researched and analyzed the cost and benefit of allowing the owner to designate the location of PL/Spaces on their vessels. The Coast Guard assumes that by mandating the location of PL/Spaces for all tank vessels, the installation costs and benefits realized would be similar to those realized in the event that vessel owners were able to choose the PL/Space locations. While the Coast Guard has determined that PL/Spaces are technologically feasible, fitting them on pre-MARPOL tankships is economically infeasible.

A total of 15 comments were received pertaining to HBL. Eight opposed HBL for reasons including the following: (1) The implementation of HBL would place pre-MARPOL vessels at a competitive disadvantage with MARPOL vessels, because they are already required to contain PL/Spaces under Regulation 13G; (2) HBL would be practically impossible to use because, depending on the type of cargo carried, problems may arise due to variances in density, tank coating compatibility, heating and cooling requirements, and permissible last cargoes; (3) HBL would necessitate revisions to vessel manuals and equipment; and (4) HBL would represent a significant regulatory challenge requiring strong, effective operational enforcement through Coast Guard oversight of industry compliance. Additionally, two comments suggested that HBL would provide only minimal oil outflow protection during groundings. One of these comments specifically explained that based on the static model used by the Coast Guard to test HBL's effectiveness, HBL may indicate a theoretical reduction in oil outflow for some grounding scenarios. However, after an accident, HBL may have limited effectiveness due to highly dynamic situations, such as weather-related impacts, tide ranges, and changes in ship trim and heel. Another two comments contended that HBL is not a structural measure requiring physical modifications, but an operational measure requiring a skilled knowledge of certain operating procedures.

In contrast to the opposing comments, the Coast Guard received seven comments supporting implementation of HBL. One comment noted that compliance with HBL requirements could be easily verified by tank gauging report examinations and draft mark inspections. Another comment recommended implementation of HBL on all single-hull vessels. An additional two comments suggested employment of HBL in all vessel cargo tanks, as opposed to only those tanks that are probabilistically located. One comment based this recommendation on two assumptions: (1) HBL would be easy to implement immediately as structural refits would be unnecessary; and (2) HBL would effectively reduce oil outflow in grounding incidents.

The Coast Guard has determined that HBL, in general, is technically feasible for single-hull tankships. Multi-port voyages and complex cargo carriage operations make HBL more time-consuming and difficult to meet. Also, some vessels would have costs attributable to HBL that are beyond the cargo shutout costs assumed in the SNPRM regulatory assessment. The regulatory assessment for this final rule accounts for some costs associated with HBL measures on smaller tankships since these vessels are most likely to have difficulty implementing HBL. The effectiveness estimates associated with HBL in reducing the outflow of oil in a grounding were not changed for this final rule assessment because the Coast Guard deems the estimates to be representative of static, as well as limited dynamic conditions. The Coast Guard recognizes that enforcement of HBL would require its direct oversight to ensure compliance by all single-hull vessel owners or operators and that tank gauging reports could be used as tools. Since no structural measures are economically feasible, the Coast Guard will be using its resources to ensure operational measures are met. The Coast Guard did not analyze the cost-benefit of requiring tank vessel owners or operators to use HBL in all cargo tanks. However, if the cost to benefit ratio of applying HBL to those cargo tanks that are located in areas of higher damage risk is prohibitive, then the cost to benefit ratio for applying HBL to all cargo tanks is also infeasible.

Four comments suggested that the Coast Guard require a combination of PL/Spaces and HBL. One comment suggested a combination of PL/Spaces covering 30 percent of the vessel's side or bottom with HBL for the remaining tanks to the extent necessary for compliance with Regulation 13G. Another comment recommended employment of PL/Spaces covering 100 percent of center tank bottoms, if HBL is used in wing tanks.

The Coast Guard has analyzed the cost and the resultant oil outflow benefits attributable to a combination of fitting PL/Spaces and applying HBL measures to pre-MARPOL tankships in accordance with Regulation 13G. The cost for this measure when compared to its benefits make this measure economically infeasible. If the combination of PL/Spaces and HBL is not cost-effective, then employing the more onerous requirement of 100 percent PL/Spaces would also be infeasible.

Amendments to 33 CFR 157

This final rule amends the subpart G, H, and I heading to reflect that no structural measures are required as interim measures for existing tank vessels without double hulls to meet the requirements of Section 4115(b) of the Oil Pollution Act of 1990. The measures required under subparts G, H, and I are all measures the Coast Guard has determined are economically and technologically feasible for enhancing

the oil pollution prevention efforts of existing single-hull tank vessels.

Assessment

This rule is a significant regulatory action under section 3(f) of Executive Order 12866 and has been reviewed by the Office of Management and Budget under that Order. It required an assessment of potential costs and benefits under section 6(a)(3) of that Order, and is significant under the regulatory policies and procedures of the Department of Transportation (44 FR 11040; February 26, 1979). An Assessment has been prepared and is available in the docket for inspection or copying where indicated under **ADDRESSES**. The Assessment is summarized in the following discussion.

This rulemaking applies to all existing vessels of 5,000 gross tons (GT) or more that do not have double hulls and that carry oil, animal fat, vegetable oil, and other non-petroleum oil in bulk as cargo. An estimated 995 existing tankships (51 U.S. tankships, 944 foreign tankships) that will be operating on U.S. navigable waters in 1997 were considered to be affected by this rulemaking.

This final rule assessment revises the benefits assumptions and calculations of the regulatory assessment conducted for the supplemental notice of proposed rulemaking (SNPRM). Cost estimates were appropriately reduced to account for implementation of Regulation 13G of Annex I of the International Convention for the Prevention of Pollution from Ships, 1973, as modified by the Protocol of 1978 (Regulation 13G) within the international fleet. Costs were also revised where comments indicated that costs were underestimated or omitted in the SNPRM analysis. The vessel population not required to meet the pollution prevention requirements of the 1973 International Convention for the Prevention of Pollution from Ships (pre-MARPOL) was also reassessed and reduced based on port call data and certificate of financial responsibility applications. The cost and benefits for vessels meeting the requirements of the 1973 International Convention for the Prevention of Pollution from Ships (MARPOL 73) and vessels meeting the MARPOL 73 convention as amended by the 1978 Protocol (MARPOL 78), were combined in this final assessment. MARPOL 73/78 refers to vessels meeting MARPOL 73 and vessels meeting MARPOL 78 requirements.

General Comments on the SNPRM Regulatory Assessment

The Coast Guard received 36 comments addressing general regulatory assessment issues. Most of the comment criticized the Coast Guard's use of oil spill data from accidents occurring prior to the promulgation of the Oil Pollution Act of 1990 (OPA 90), because using this data resulted in the underestimation of costs and overestimation of benefits. The majority of these comments were based on a general impression that little benefit would result from the implementation of proposed structural measures in relation to the extensive costs involved. One comment specifically noted that studies performed by the International Maritime Organization (IMO), the Coast Guard, and Herbert Engineering Corporation failed to indicate that these measures were cost-effective.

The Coast Guard has revised its regulatory assessment for this final rule. The major difference between its assessment for the SNPRM and this final rule is the recalculation of anticipated oil outflow benefits based on the accident data for single-hull tankships from 1990 through 1994. This five-year period indicates a reduction of single-hull tankship accidents and reflects many of the improvements industry has made to reduce oil spills since OPA 90.

Another comment contended that a cost-benefit analysis was not authorized by OPA 90. The comment asserted that OPA 90 requires the Coast Guard to adopt measures providing the maximum protection to the environment that are economically feasible, not the ones that are least costly. Two other comments argued that economic feasibility should not be determined solely by a limited cost-benefit analysis. One of these comments maintained that economic feasibility should be based on whether the costs are wholly disproportionate to the benefits on an industry-wide scale, with the fate of one isolated firm or facility immaterial to the outcome of the rule. The other comment contended that economic feasibility should be based on the industry's ability to pass on or absorb costs without threatening the competitive structure of the industry.

Several requirements to conduct a cost-benefit analysis exist in law. One law requiring such analysis, which is specifically applicable to this rulemaking, is the Small Business Regulatory Enforcement Fairness Act of 1996. For this final rule, an evaluation of cost and its relationship to the anticipated benefits was performed with respect to structural measures. The evaluation included a review of the potential impact of such measures on small entities, as well as a comparison of the impact on domestic versus international fleet vessels. The disproportionate cost to U.S. tankship companies operating on coastal routes, considering the little anticipated benefit in oil outflow reduction, was key in the Coast Guard's determination of economic infeasibility for structural measures.

Industry Costs

This final rule reassessed the cost of implementing structural measures in order to estimate the cost-benefit of requiring pre-MARPOL tankships to meet the requirements of Regulation 13G earlier than the 25 year age limit it imposes. In addition, costs were also reassessed to reflect the range of cargo shutout amounts realized by vessels depending on the type of cargo carried, i.e., crude or product. Finally, to ensure that a thorough examination of the cost to benefit ratio was conducted, costs were broken down by deadweight tonnage.

Cost Comments on the SNPRM Regulatory Assessment

(a) *General:* The Coast Guard received over 40 comments regarding various cost issues. Only two of the comments believed that the proposed structural measures would be economically feasible. One of these comments specifically disagreed with the hydrostatic balance loading (HBL) cost estimates attributed to vessels complying with the Ports and Waterways Safety Act or otherwise equipped with segregated ballast tanks (SBT). The comment argued that HBL would not result in a loss of cargo capacity for either vessel type.

The majority of the comments claimed that structural measures would not be economically feasible due to the excessive cost resulting from the reduction in cargo capacity. Most comments predicted a cargo capacity reduction of between 8 and 25 percent, but a few indicated that cargo capacity would be reduced by as much as 30 to 50 percent. If measures were applied to all vessels, one comment contended that a level economic playing field could be achieved throughout the industry and the high costs of cargo shutout could be adequately offset by an indirect distribution of costs to the public. Other comments stated that the cost estimates for structural measures did not adequately address opportunity costs (such as lost transportation time), time charter rates, dry dock fees, depreciation losses, and transportation, delivery, crew, fuel, financing, and insurance

costs. In addition, four comments claimed that some vessels would be unable to continue operations to U.S. ports if structural measures were implemented. Five more comments stated that the proposed measures would not be economically feasible for their fleet because their vessels would be phased-out of service shortly after incurring the cost of any structural measures. One of these comments suggested that rather than depleting limited financial resources to implement structural measures, vessel owners and operators should use the finances to support their fleet's transition to double hulls, which will become effective in 2015.

Another comment claimed that HBL-related cargo shutout amounts for the pre-MARPOL fleet were overestimated by the Coast Guard, and would amount to only 8 percent or less, as opposed to the 19 percent estimated in the SNPRM regulatory assessment. Consequently, this comment believed that HBL would be economically feasible, and that structural measures would cause a relatively insignificant 1.5 percent increase in tonnage demand on the international, import-trading fleet. In contrast, four other comments strongly stated that when costs are reviewed with respect to freight rates and worldwide tonnage capacity, the implementation of structural measures would not be economically feasible. Two comments stated that the SNPRM cost analysis substantially underestimated costs by not recognizing the cost of replacing lost oil-carrying capacity, and by not accounting for an increase in charter rates (and oil prices) caused by the consequent loss of capacity in the world fleets. The comments further explained that while there is some slack cargo carriage capacity remaining in the world's very large crude carrier (VLCC) tankship fleet, it is disappearing rapidly as older ships continue to retire, and any requirement reducing cargo capacity would inevitably exert substantial upward pressure on charter rates and transportation costs worldwide. The comments also calculated that the world scale spot charter market rate would increase as much as four times the cost attributed by the SNPRM to a VLCC tankship owner implementing HBL. Another comment estimated that the significant increase in daily time charter rates (from 27 to 78 percent to recover the costs of implementing protectively-located spaces (PL/Spaces) to its pre-MARPOL fleet, and from 6 to 32 percent to recover the costs of fitting double sides to its MARPOL 73/78 fleet) on their tankships of less than 30,000 dwt would severely impact their ability to recover their capital investment. Consequently, the comment stated this would reduce its current fleet of 42 tankships trading in U.S. waters to 6 tankships. The fourth comment calculated that the total tonnage available for the U.S. trades in the 25,000 to 30,000 dwt product carrier category would be reduced 45 percent because of increased charter rates and reduced cargo-carrying capacity. The comment went on to state that due to the costs associated with the implementation of structural measures, 8 clean product tankers currently providing 64 percent of the clean product to the U.S. Gulf and East Coast would be forced from U.S. trade.

The Coast Guard has revised the cost and benefit calculations for this final rule in consideration of the comments submitted to the docket. This final rule assessment is extensive and uses factors such as cargo loss, or lack thereof for vessel's fitted with SBT, opportunity costs, and a wide range of costs a company might incur from refitting a vessel. Financing, insurance costs, vessel depreciation, the replacement of lost tonnage (resulting in time charter rate increases), and a vessel's limited remaining life under the OPA 90 phase-out schedule were used, in general, to evaluate the cost-effectiveness of replacing single-hull vessels with double hull vessels earlier than their OPA 90 mandated dates. Concerns such as the loss of a substantial portion of a company's fleet due to structural measures, as well as the possibility of disproportionate indirect costs to consumers in geographic areas dependent on a single oil source were key in the Coast Guard's determination of economic infeasibility.

(b) *Pre-MARPOL Tank Vessels:* Two comments supplied specific data for their international pre-MARPOL vessels between 5,000 to 29,000 dwt. One of these comments estimated a cargo shutout of 25 to 27 percent and refit costs of $225,000 per vessel to implement structural measures on these smaller product tankers. The second comment indicated that each of their parcel tankers would be subjected to a cargo shutout of 35 percent with an average refit cost of $10.3 million. Another comment supplied only cargo shutout information for international pre-MARPOL product tankers of 5,000 to 50,000 dwt. This comment calculated a cargo shutout of 20 to 25 percent for PL/Spaces, with HBL increasing the shutout to 28 to 35 percent. One comment estimated that the implementation of HBL would result in a cost of $2 million per vessel for the pre-MARPOL fleet. Another comment contended that the cost to pre-MARPOL tankships operating as very large crude carriers (VLCC) was overestimated in the SNPRM regulatory assessment, and that the pre-MARPOL VLCC tanker model used in the SNPRM regulatory assessment was not representative of a typical tanker of that size. As a result, according to this comment, the Coast Guard's assumption that all VLCC pre-MARPOL tankships will have to refit PL/Spaces to meet the requirements of Regulation 13G is false. This comment indicated that five vessels researched would be able to meet the requirements of Regulation 13G by using the HBL criteria approved as an IMO alternative. In a similar vein, another comment disagreed with the Coast Guard's assumption that pre-MARPOL tankers reaching the age of 25 before 2002 would have to implement PL/Spaces to meet Regulation 13G. This comment explained that these tankers can implement HBL to meet the international requirement of 13G and continue to trade; thus, if PL/Spaces are mandated without allowing for the HBL alternative, the cost to fit such spaces on pre-MARPOL tankers reaching 25 years old before 2002 should be included in the regulatory analysis.

For this final rule, the Coast Guard reassessed the costs and benefits of implementing different structural measures on the international pre-MARPOL tankship fleet. Measures studied for this reassessment included the combination of PL/Spaces and HBL, the use of HBL only in order to meet the requirements of Regulation 13G, and the implementation of HBL requirements on the identical timeline required by Regulation 13G. The per vessel, per voyage cost for implementing HBL in the final assessment varied depending on deadweight tonnage and ranged from $121,000 to $2.4 million. The Coast Guard recognizes that the assessment for the SNPRM only reflected cargo shutout cost for crude carriers. In the assessment for the final rule, costs were broken down by deadweight tonnage. A separate analysis was done to estimate the effect higher cargo shutout amounts realized by small product tankers may have on the cost-effectiveness of each of the structural measures researched. The Coast Guard did not increase the refit cost assumed in the SNPRM for small tankships because it deems the original onetime refit cost estimate of $328,000 to be reasonable.

(c) *MARPOL 73/78 Tank Vessels:* Three comments supplied information on U.S. coastal fleet, MARPOL 73/78 vessels. For product tankers in the 5,000

to 49,000 dwt category, one comment submitted cargo shutout amounts approximating 207,515 long tons (LT) per year (yr), and opportunity costs (which include structural refit costs needed to meet the HBL requirement) of $1 to $3 million per vessel. Another comment supplied shutout percentages for product vessels carrying heavy (bunker C), medium (diesel oil), and light (gasoline) cargoes, using three different variations of structural measures. According to their calculations, shutout using HBL only would equal 5.5 percent for heavy cargo, 19.5 percent for medium weight cargo, and 38 percent for light cargo. Clean ballast tanks (CBT) with HBL would impose cargo shutouts of 29 percent, 41.6 percent, and 50 percent, respectively. Ballasted empty wing tanks with HBL would result in shutouts amounting to 53.6 percent, 59.2 percent, and 64.5 percent, respectively.

A comment estimated that crude-carrying U.S. MARPOL 73/78 vessels ranging from 5,000 to 49,000 dwt would experience shutouts of 113,077 LT/yr, and refit costs of $1 to $3 million per vessel following the implementation of structural measures. For crude-carrying tankers of the 50,000 to 89,000 dwt category, shutouts were approximated at 326,195 LT/yr, with refit costs again ranging from $1 to $3 million per vessel. Crude-carrying vessels operating in the 90,000 to 199,000 dwt range were estimated to potentially experience shutout amounts of 724,655 LT/yr and refit costs of $1 to $3 million per vessel following implementation of structural measures. For those crude-carrying vessels comprising 200,000 dwt or greater, a comment indicated that shutout would amount to 861,785 LT/yr plus $1 to $3 million in refit costs per vessel.

Two comments supplied information relating to the international MARPOL 73/78 fleet. For product-carrying vessels of 30,000 to 49,000 dwt, a cargo shutout cost was calculated to be $300,000 per year (or $1.5 million for the remainder of the ship's life). For parcel tankers operating in the 5,000 to 29,000 dwt category, cargo shutout was estimated at 34 percent for the implementation of HBL, plus 10 percent for the implementation of PL/Spaces when required, while refit costs amounted to an average $7.4 million per vessel. Calculations submitted for parcel tankers operating in the 30,000 to 49,000 dwt category, showed 34 percent shutout using HBL, plus an additional 10 percent for PL/Spaces where required, with refit costs averaging $11.9 million per vessel.

For this final rule, the Coast Guard reassessed the costs and benefits of implementing HBL on the MARPOL 73/78 tankship fleet. A range of cargo shutout amounts was used to demonstrate the variance between the cost of implementing HBL on crude-carrying and product-carrying vessels. Per vessel, per voyage cargo shutout estimates for implementing HBL in this final assessment also varied depending on a vessel's deadweight tonnage, and ranged from $151,000 to $2.4 million. The Coast Guard recognizes that the assessment for the SNPRM did not include a refit cost for MARPOL 73/78 vessels. Onetime refit costs to MARPOL 73/78 vessels for swash bulkheads or other associated structural changes were added to the cost estimates for this final assessment. This onetime refit cost was assumed for MARPOL 73/78 vessels between 5,000 and 50,000 dwt in order to account for the practical application of HBL to these smaller tankships, which would necessarily have to fit some proportion of PL/Spaces to account for the high shutout consequences of HBL. Refit costs were not included for larger MARPOL 73/78 vessels because it was assumed that these vessels have sufficient CBT or PL/Spaces to practically apply HBL, assuming the cargo shutout amounts estimated in this final rule's regulatory assessment.

(d) *Tank Barges:* One comment estimated that for tank barges, the installation of PL/Spaces would impose average costs of $3 million per tank barge, while the implementation of HBL would reduce cargo capacity by 33 to 50 percent, and in some cases, 100 percent per barge. This comment went on to explain that such costs are not readily absorbed, and are even exacerbated by the limited service life remaining for some of these barges, the enormous capital expenditure necessitated by the OPA-mandated transition to double hulls, and the diminution in value of the existing barge fleet brought on by the OPA-mandated replacement schedule. Another comment surmised that is was not technologically feasible for barges to meet the requirements of PL/Spaces or HBL without eliminating cargo tanks or performing major modifications at a significant cost. This comment estimated that PL/Spaces would reduce cargo capacity by 25 percent on barges with three longitudinal bulkheads, while HBL would impose a cargo shutout of 50 percent for barges with one longitudinal bulkhead. In addition, the costs of installing longitudinal bulkheads were estimated at $800,000 to $1.2 million per barge, ballast systems and tank coatings at $400,000 to $500,000 per barge, and opportunity costs at $600,000 to $800,000 per barge.

The Coast Guard reviewed and reassessed the cost for U.S. tank barge owners to comply with PL/Spacing requirements using either added bulkheads or existing tanks, and HBL requirements. The costs analyzed for the PL/Space options were similar to those used in the SNPRM assessment, but the costs studied for HBL measures were estimated by using figures provided in the comments. The phase-out dates for these barges were also factored into this cost analysis, along with costs similar to those incurred by the pre-MARPOL fleet. Through this final rule, the Coast Guard verifies that because of the high cost of implementing structural measures on tank barges, such measures are not economically feasible.

Final Rule Cost Assessment

The cost assessment for this final rule, as presented in Table 1, provides an estimate of costs for each tank vessel category (pre-MARPOL or MARPOL 73/78) and deadweight tonnage range. In general, these costs were calculated using a methodology similar to that done for the SNPRM assessment. However, additional analyses were used to calculate the projected costs of several variations of measures researched for the SNPRM including: (1) Implementation of Regulation 13G on the pre-MARPOL fleet in 1997, 1998, or 1999; (2) implementation of Regulation 13G on the pre-MARPOL fleet using the same timeline mandated by that regulation; (3) implementation of the HBL alternative allowed under Regulation 13G on the pre-MARPOL fleet; and (4) implementation of HBL on tank barges. An estimated range of costs was also developed to represent the difference in cargo shutout amounts attributable to vessels carrying crude oils (low number) and vessels carrying lighter products (high number). As a summary, the present-value cost of implementing certain structural measures in 1997 is presented in Table 1.

BILLING CODE 4910–14–M

Table 1: Cost Due to Certain Structural Measures

Estimated Present Value Cost in Millions for Single-Hull Fleet (1997 through 2015)*

Cost Range Represents Variation in Cargo Shutout to Reflect Crude or Product Cargos

Deadweight Tonnage (x1,000)	Pre-MARPOL			
	P/L Spaces with Ballast		HBL to meet 13G(7)	
	International	U.S. Coastal	International	U.S. Coastal
5 - 29	$262.7. - $338.4	$26.3 - $34.1	$50.5 - $378.4	$5.3 - $39.4
30 - 49	$125.1 - $141.6	$13.7 - $15.7	$22.1 - $166.0	$2.8 - $20.7
50 - 89	$63.2 - $71.0	$7.2 - $8.2	$10.2 - $77.2	$1.4 - $10.8
90 - 199	-----	$21.3 - $23.1	-----	$4.2 - $10.5
90 - 144	$91.6 - $99.7	-----	$16.3 - $40.8	-----
145 -199	$6.7 - $7.2	-----	$1.6 - $3.2	-----
200+	$159.1 - $171.6	$11.5 - $12.5	$17.9 - $35.7	$2.1 - $5.2
Total	$708.4 - $829.5	$80.0 - $93.6	$118.6 - $701.3	$15.8 - $86.6

Deadweight Tonnage (x1,000)	MARPOL 73/78	
	HBL to meet 13G(7)	
	International	U.S. Coastal
5 - 49	$186.9 - $314.6	$22.5 - $93.1
50 - 89	$270.4 - $339.9	$10.6 - $16.2
90 - 199	-----	$30.4 - $39.7
90 - 144	$261.7 - $319.8	-----
145 -199	$49.6 - $60.6	-----
200+	$116.3 - $142.2	$10.6 - $13.0
Total	$884.9 - $1,177.1	$74.1 - $162.0

Deadweight Tonnage (x1,000)	U.S. Tank Barges		
	PL/Spaces Refit	PL/Spaces using Cargo Tanks	HBL
5 - 29	$148.4 - $160.4	$48.9 - $216.6	$14.0 - $140.5
30+	$54.0 - $66.6	$58.8 - $142.5	$19.0 - $126.5
Total	$202.4 - $227.0	$107.7 - $359.1	$33.0 - $267.0

* In accordance with Office of Management and Budget guidance costs and benefits have been discounted by 7% back to 1990.

BILLING CODE 4910–14–C

Benefits

The benefit analysis for this final assessment, in general, uses a methodology similar to that used in the SNPRM for evaluating the incremental reduction in volume of oil spilled as a result of structural measures. Although effectiveness ratios for international pre-MARPOL vessels were reevaluated based on the implementation of Regulation 13G, other effectiveness ratios remained the same as those reported in the SNPRM assessment. However, the volume of oil spilled due to accidents was estimated based on revised historical oil spill data reflecting: (1) The accident history of single-hull tankships since the enactment of OPA 90; (2) the anticipated reduction in oil spills due to the effect of the operational measures final rule on the frequency and severity of future accidents; and (3) the elimination of operational discharge benefits from the calculation, since operational discharge is not allowed in U.S. navigable waters.

Benefit Comments on the SNPRM Regulatory Assessment

Six comments included remarks regarding the potential environmental benefits that may result from the implementation of structural measures. Three comments urged the Coast Guard to provide equal or greater consideration to the environmental benefits derived from the use of structural measures. Yet another comment contended that the SNPRM regulatory assessment failed to properly assess the benefits of the measures considered, citing the Coast Guard's failure to state the value of avoiding spills in comparable terms such as cleanup costs, natural resource damages, restoration costs, and commercial and recreational losses. Another comment urged the Coast Guard to include the potential reduction of both environmental and economic damages from oil not spilled in its regulatory analysis.

Although the Coast Guard recognizes the value of assessing benefits in terms of the cost of third-party cleanup and damage to natural resources, the Coast Guard, for all OPA 90 rulemakings, has reviewed benefits from the perspective of the amount of oil not spilled, rather than a dollar value figure. Details on the extensive work that NOAA has done on this subject can be found in its final rule entitled, ''Natural Resource Damage Assessments'' published in the Federal Register on January 5, 1996 (61 FR 440). When calculating benefits using NOAA natural resource guidance, a wide range of benefits can be estimated depending on the sensitivity of the habitat, restoration costs, compensable value, and damage assessment costs. However, the inclusion of these factors would not significantly increase the benefits resulting from the implementation of structural measures to make them cost-effective.

The remaining comments minimized the potential benefits that may arise from the use of structural measures, and essentially concluded that structural measures would contribute little to the reduction of oil spill volume in U.S. waters. One comment noted that the environmental benefits resulting from the implementation of PL/Spaces would likely be minimal because the most cost-effective location for such spaces, the vessel's mid-body, would not provide adequate protection to the fore and aft sections of the vessel, which are the areas most likely to sustain damage in collisions. Another comment contended that the Coast Guard overestimated operational discharge benefit amounts by wrongly assuming that foreign tankers are not operating to the same operational discharge criteria as U.S. tankers, explaining that discharge criteria established by the 1973 International Convention for the Prevention of Pollution from Ships was brought into force in the late 1970s and applies to over 90 percent of the world's tanker tonnage. Two comments argued that the Coast Guard overestimated benefits for pre-MARPOL vessels by using the MARPOL 73 maximum allowable discharge amounts and underestimated the operational discharge benefits from MARPOL 73/78 vessels, which were incorrectly assumed to have no discharges. One of these comments questioned the Coast Guard's incorporation of operational discharges into the regulatory assessment for the SNPRM in the first place, because all operational discharge is forbidden in U.S. waters. Therefore, the comment asserted that the quantities of unspilled oil occurring from operational discharge were significantly overestimated in the SNPRM regulatory assessment and should be removed from the benefit calculations. The other comment calculated that the quantity of oil not spilled from operational discharges from pre-MARPOL vessels when converting to SBT/CBT was overestimated by the Coast Guard by a factor of 10 to 20.

A total of nine comments challenged the Coast Guard's use of pre-OPA 90 oil spill data in the regulatory assessment for the SNPRM, primarily on the grounds that it did not reflect the significant gains achieved in oil spill reduction within recent years. In addition, several comments recommended that the Coast Guard consider the following when reviewing post-OPA 90 data: oil released from accidents, instead of oil released from operational discharges; and, accident data involving groundings or structural failures. In contrast, other comments stated that the Coast Guard should specifically exclude the following data from the economic assessment for structural measures: spill data in international waters; lightering zone data; and barge and tanker spill data unrelated to groundings, collisions, and structural failures.

The Coast Guard has extensively reassessed the anticipated benefits for structural measures in this final rule. This reassessment was done because the Coast Guard recognized the substantial decrease in oil spill volume from the tank vessel industry since 1990. The Cost Guard agrees that oil spill amounts attributed to operational discharges should not be included as a benefit for structural measures. The Coast Guard deems this final rule benefit assessment a reasonable estimate of oil outflow reduction amounts achieved through the implementation of structural measures.

Final Rule Benefit Assessment

Oil spill amounts attributed to single-hull tankships and tank barges during the 5-year period of 1990 through 1994 were taken from the regulatory assessment for the operational measures final rule if the spills were caused by groundings, collisions, or structural failures. Based on this accident data, an average annual oil spill amount from single-hull tankships was estimated at 11.52 barrels per vessel. The average annual oil spill amount from single-hull tank barges over 5,000 GT was estimated to be 72.4 barrels per barge. Using a combination of the phase-out schedule and the build dates of the affected vessel population, as calculated in the SNPRM assessment, an estimated present value of oil spilled due to groundings, collisions, or structural failures was calculated to be 52,369 barrels for single-hull tankships and 21,487 barrels for barges. Based on anticipated oil spill prevention resulting from the implementation of operational measures, this present value oil spill amount was reduced appropriately and estimated to be between 16,768 and 32,520 barrels spilled between 1997 and 2015 for tankships and between 18,055 and 19,865 barrels spilled for tank barges. The average of this present value oil spill amount was then proportioned out between the four tankship categories based on vessel population as follows: (1) International pre-MARPOL (11,735

barrels); (2) U.S. pre-MARPOL (558 barrels); (3) International MARPOL 73/78 (11,742 barrels); and (4) U.S. MARPOL 73/78 (608 barrels). For U.S. and international tank barges, the average present value of 18,960 barrels spilled was used in this analysis. As done in the SNPRM, the U.S. fleet consists of vessels that only operate in U.S. coastwise trade. If a U.S. flagged vessel also trades between international ports, it was accounted for in the international population.

To estimate benefits in terms of oil unspilled, each structural measure's ability to reduce oil outflow in a grounding, collision, or structural failure accident was calculated and translated into an effectiveness ratio similar to those developed for the SNPRM assessment. This effectiveness ratio was then multiplied by the anticipated annual oil spill amount for each of the three accident types to calculate the anticipated benefits of the implementation of structural measures.

Because comments received on the SNPRM stated that the cost to benefit ratio was disproportionate for smaller tankship operations, anticipated oil spill benefits were further broken down by deadweight tonnage. Benefits were also calculated for pre-MARPOL fleets where HBL was instituted to meet the requirements of Regulation 13G. The Coast Guard recognizes that PL/Spaces must be ballasted down in order to provide oil outflow benefits, despite the fact that Regulation 13G does not articulate this requirements. Consequently, for this final rule assessment, benefits for the measure combining PL/Spaces and HBL were calculated based on the assumption that the spaces were ballasted down. The benefits estimated for this final rule are significantly less than those estimates used in the SNPRM, because the recalculation of benefits did not include consideration of operational discharge benefits for pre-MARPOL vessels, and because the spill history used for all tankships reflects post-OPA 90 accident data. Table 2 is a summary of the present-value benefits estimated for this final rule with respect to vessel type and deadweight tonnage based on an implementation date of 1997.

BILLING CODE 4910–14–M

Table 2: Benefits Due to Certain Structural Measures

Average Present Value Barrels Unspilled (1997 through 2015)*

Deadweight Tonnage (x1,000)	Pre-MARPOL			
	P/L Spaces with Ballast		HBL to meet 13G(7)	
	International	U.S. Coastal	International	U.S. Coastal
5 - 29	1,525.5	61.8	572.7	23.6
30 - 49	576.7	24.3	292	12.6
50 - 89	304.7	16.9	154.2	5.1
90 - 199	------	26.0	-----	10.7
90 - 144	260.3	-----	115.6	-----
145 -199	8.1	-----	3.5	-----
200+	414.2	12.3	137.2	4.1
Total	3,089.5	141.3	1,275.2	56.1

Deadweight Tonnage (x1,000)	MARPOL 73/78	
	HBL to meet 13G(7)	
	International	U.S. Coastal
5 - 49	513.0	27.3
50 - 89	583.9	11.0
90 - 199	-----	36.9
90 - 144	391.7	-----
145 -199	57.5	-----
200+	159.3	7.3
Total	1,705.4	82.5

Deadweight Tonnage (x1,000)	U.S. Tank Barges		
	PL/Spaces Refit	PL/Spaces using Cargo Tanks	HBL
5 - 29	3,925.0	3,925.0	1,473.4
30+	1,442.7	1,442.7	1,125.0
Total	5,367.70	5,367.70	2,598.40

* In accordance with current Office of Management and Budget guidance program costs and benefits are discounted at 7% back to 1990.

BILLING CODE 4910–14–C

Cost-Benefit

Cost-benefit calculations were completed using the revised cost and benefit estimates calculated for each structural measure. Based on the cost-benefit analysis performed for this final rule, structural measures, in particular, pose the greatest economic challenge to the U.S. coastal fleets. Post OPA–90 benefits combined with the high cost to U.S. coastal vessels to refit PL/Spaces or to implement HBL requirements that meet Regulation 13G requirements make the cost-effectiveness of implementing structural measures on these vessels questionable. In addition, given the disproportionate cost impact of structural measures on that portion of the fleet operating as small product tankers crucial to certain ports, economically feasible structural measures for these vessels cannot be attained.

Cost-Benefit Comments on the SNPRM Regulatory Assessment

The Coast Guard received six comments on the cost-effectiveness of implementing structural measures. One comment estimated that a refinement of the SNPM regulatory assessment using post-OPA 90 data, excluding operational discharges in whole or in part (since such discharges occur far from U.S. waters in amounts substantially less than assumed in the SNPRM regulatory assessment), and including the cost of fitting PL/Spaces to pre-MARPOL tankers (since many vessels can satisfy the requirements of Regulation 13G using light-loading only), would result in costs in excess of $50,000 per barrel of oil not spilled, as opposed to actual spill costs of $2,000 to $10,000 per barrel spilled. Another company evaluated the true cost-benefit of implementing structural measures to their corporation in light of the company's historical non-spill performance. Based upon their calculations, a 3-year phase-in period would result in cargo shutout and onetime modification costs totaling $17.7 million for their fleet of product and crude-carrying vessels, while the net present value cost per barrel of spilled oil avoided would be $1 million per barrel. Consequently, this comment estimated the potential cost to this particular corporation as being 28 to 84 times greater than that indicated in the SNPM regulatory assessment. Another comment provided extensive documention and analysis on the cost-effectiveness of the proposed measures by using oil spill data from 1991 through 1994, estimating the operational discharge benefits based on actual vessel discharge records, and including an estimate of clean-up and retribution costs. Using National Oceanic and Atmospheric Administration (NOAA) damage assessment and restoration settlement data and oil spill data from spills recorded within U.S. waters in the Oil Spill Intelligence Report, this comment estimated that the average damage amount per barrel should be $18,580, and explained that in order for a requirement to be cost-effective, its cost-benefit should be less than this amount. According to this comments analysis, no structural requirement is cost-effective.

The Coast Guard agrees with the comments and has calculated the benefits for this final rule using post-OPA 90 accident data and excluding the benefits gained from eliminating operational discharges. The recalculated benefits for this final rule do not include estimates in terms of the amount of money saved by eliminating oil spill clean-up costs. To remain consistent with all other OPA 90 assessments, the Coast Guard has considered benefits in terms of oil unspilled. Because the cost-benefit ratios presented in this final rule are much higher than $2,000 or $18,580 per barrel as referenced in the comments, the Coast Guard deems that even if clean-up cost savings were included in this cost-benefit analysis, the cost-benefit ratios would not fall below these thresholds.

Three more comments specifically discouraged the Coast Guard from implementing the least costly structural measure. Two of these comments noted that the Coast Guard proposed PL/Spaces in light of its low cost, despite findings that another alternative requiring HBL would prevent the spillage of significantly more oil. Specifically, the comment estimated that the HBL alternative would present spillage of 164,000 barrels of oil which is nearly 8 times the 21,000 barrels of spillage prevented by PL/Spaces. One of the comments also conceded that the HBL alternative would cost approximately $3 billion to implement from 1998 to 2015, which amounts to nearly 5 times the estimated cost of implementing PL/Spaces, $579 million, but explained that as compared to the cost of cleanup under California law, $18,900 per barrel, the feasibility of HBL in terms of avoided costs is economically favorable.

The Coast Guard has reassessed the cost to benefit ratio for various structural measures. The costs for this final assessment closely correlate the costs used in the SNPRM assessment; however, the benefits have been significantly reduced, and no longer correlate. If the cost to benefit ratio of $18,900 per barrel of unspilled oil is compared to this final rule assessment, none of the measures can be deemed cost-effective. However, the Coast Guard determination of economic infeasibility is not based solely on the dollar per barrel unspilled ratio. While the numbers certainly support a determination of economic infeasibility, the impact on small entities and geographic areas dependent on a single oil source also weighted in favor of this decision.

Final Rule Cost-Benefits

The Coast Guard has extensively researched both the cost and the resultant benefits of implementing structural measures on single-hull tank vessels. In accordance with current Office of Management and Budget guidance, program costs and benefits are discounted at 7 percent back to 1990. A summary of the cost-benefit ratios, which were computed by dividing the cost of each structural measure by its associated benefit, it presented in Table 3, and reflects a 1997 implementation date. These ratios are categorized by international and U.S. coastal fleets.

BILLING CODE 4910–14–M

Table 3: Cost - Benefit Due to Certain Structural Measures

Estimated Present Value Cost-Benefit in Dollars per Barrel Unspilled (in Thousands)

Single-Hull Fleet with an Implementation date of 1997*

Deadweight Tonnage (x1,000)	Pre-MARPOL			
	P/L Spaces with Ballast		HBL to meet 13G(7)	
	International	U.S. Coastal	International	U.S. Coastal
5 - 29	$172.2 - $221.8	$425.6 - $551.8	$88.2 - $660.7	$224.6 - $1,669.5
30 - 49	$216.9 - $245.5	$563.8 - $646.1	$75.7 - $568.5	$222.2 - $1,642.9
50 - 89	$207.4 - $233.0	$426.0 - $485.2	$66.1 - $500.6	$274.5 - $2,117.6
90 - 199	-----	$819.2 - $888.5	-----	$392.5 - $981.3
90 - 144	$351.9 - $383.0	-----	$141.0 - $352.9	-----
145 -199	$827.2 - $888.9	-----	$457.1 - $914.3	-----
200+	$384.1 - $414.3	$935.0 - $1,016.3	$130.5 - $260.2	$512.2 - $1,268.3
Averaged Total	$248.9	$614.3	$321.5	$912.7

Deadweight Tonnage (x1,000)	MARPOL 73/78	
	HBL to meet 13G(7)	
	International	U.S. Coastal
5 - 49	$364.3 - $613.3	$824.2 - $3410.3
50 - 89	$463.1 - $582.1	$963.6 - $1,472.7
90 - 199	-----	$823.8 - $1,075.9
90 - 144	$668.1 - $816.4	-----
145 -199	$862.6 - $1,053.9	-----
200+	$730.1 - $892.7	$1,452.1 - $1,780.8
Averaged Total	$604.6	$1,430.9

Deadweight Tonnage (x1,000)	U.S. Tank Barges		
	PL/Spaces Refit	PL/Spaces using Cargo Tanks	HBL
5 - 29	$37.8 - $40.9	$12.5 - $55.2	$9.5 - $95.3
30+	$37.4 - $46.2	$40.8 - $98.8	$16.9 - $112.4
Averaged Total	$40.0	$43.5	$57.70

* In accordance with Office of Management and Budget guidance costs and benefits have been discounted by 7% back to 1990.

BILLING CODE 4910–14–C

An analysis of the cost to benefit ratio for requiring implementation of Regulation 13G on pre-MARPOL tankships on the same timeline as required by Regulation 13G (25 years after the vessel's build date) was also completed for this final rule regulatory assessment. Because those pre-MARPOL vessels on international routes were assumed to comply with this requirement, no cost or benefit was assigned to these vessels for implementing this requirement. The cost for implementing Regulation 13G on pre-MARPOL tankships was estimated to be $13.5 million and would be placed solely on those tankships operating on U.S. coastal routes until 2015. The benefit from this requirement was not specifically calculated. The Coast Guard estimated a benefit lower than the attained by the HBL requirement on U.S. coastal pre-MARPOL tankships because the implementation date would be later than 1997 (the date assumed for the HBL calculations). Therefore, the cost-benefit to the U.S. coastal fleet would be higher than $240,642 per barrel of unspilled oil. Because the financial burden of this measure reduces the ability of U.S. ships to compete with foreign shipping interests and the cost-benefit ratio is extremely high, the Coast Guard deems this measure to be economically infeasible.

Similar cost-benefit calculations were also conducted for varying implementation years ranging from 1998 to 2001. These calculations show that the cost-benefit ratio becomes higher with each implementation year proposed due to the short benefit time-frame resulting from the aggressive vessel phase-out schedule created by OPA 90. The inability to recoup financial losses, as well as the effectiveness of operational measures for existing tank vessels for reducing oil spills, supports a determination that the costs of structural measures outweigh the benefits.

The total present value cost of structural measures over the 18-year period of this final rule would range from $896 million to $1.1 billion. Total present value of the benefits for structural measures over the 18-year period of this final rule would range from 5,718 to 10,386 barrels of unspilled oil. As a benchmark for this analysis, the Coast Guard used cost-benefit of $24,000 per barrel of unspilled oil, which was the estimated cost-benefit of the double hull requirements mandated by OPA 90 in Section 4115(a) to which these interim requirements are linked. Because the cost-benefit estimates for the measures are well over $24,000 per barrel of unspilled oil, and the measures would impose substantial costs to the industry over the estimated 18-year period, no measures are required. Some regulatory text is contained in this final rule to clearly indicate that the Coast Guard considers the operational measures and lightering equipment requirements to be the only feasible interim requirements for existing tank vessels without double hulls, and that these requirements, as promulgated, satisfy section 4115(b) of OPA 90.

Small Entities

Under the Regulatory Flexibility Act (5 U.S.C. 601, *et seq.*), the Coast Guard must consider whether this rule will have a significant economic impact on a substantial number of small entities. ''Small entities'' may include: (1) Small businesses and not-for-profit organizations that are independently owned and operated and are not dominant in their fields; and (2) governmental jurisdictions with populations of less than 50,000. The Coast Guard has determined that this rule will not have a significant economic impact on a substantial number of small entities because no structural measures are being imposed in this rule. Therefore, the Coast Guard certifies under section 605(b) of the Regulatory Flexibility Act (5 U.S.C. 601, *et seq.*) that this rule will not have a significant economic impact on a substantial number of small entities.

Unfunded Mandate

Under the Unfunded Mandates Reform Act (Pub. L. 104–4), the Coast Guard must consider whether this rule will result in an annual expenditure by State, local, and tribal governments, in the aggregate, or by the private sector, of $100 million (adjusted annually for inflation). The Act also requires (in Section 205) that the Coast Guard identify and consider a reasonable number of regulatory alternatives and, from those alternatives, select the least costly, most cost-effective, or least burdensome alternative that achieves the objective of the rule.

After extensive review of several alternatives, all with varying cost and effectiveness ratings, the Coast Guard has determined that no structural measures are cost-effective, and is therefore not requiring any in this rule. Consequently, this rule will not result in estimated costs of $100 million or more to either State, local, or tribal governments in the aggregate, or to the private sector.

Collection of Information

This rule contains no collection-of-information requirements under the Paperwork Reduction Act (44 U.S.C. 3501, *et seq.*).

Federalism

The Coast Guard has analyzed this rule under the principles and criteria contained in Executive Order 12612 (October 26, 1987) and, because of the long-standing and judicially recognized need for uniform rules regulating the design and construction of vessels engaged in interstate and international commerce, has determined that this rule does not have sufficient federalism implications to warrant the preparation of a Federalism Assessment.

Environment

The Coast Guard considered the environmental impact of this final rule and concluded that preparation of an Environmental Impact Statement was not necessary. As discussed in the Environmental Assessment, the final rule's Regulatory Assessment, and the Operational Measures final rule Regulatory Assessment provide sufficient evidence and analysis for determining that structural measures are not economically feasible; and therefore, should not be promulgated under Section 4115(b) of OPA 90. Because no structural measures are required, an Environmental Impact Statement is not required under the National Environmental Policy Act. An Environmental Assessment and a Finding of No Significant Impact are available in the docket for inspection or copying where indicated under **ADDRESSES**.

List of Subjects in 33 CFR Part 157

Cargo vessels, Oil pollution, Reporting and recordkeeping requirements.

For the reason set out in the preamble, the Coast Guard amends 33 CFR part 157 as follows:

PART 157—RULES FOR THE PROTECTION OF THE MARINE ENVIRONMENT RELATING TO TANK VESSELS CARRYING OIL IN BULK

1. The authority citation for part 157 continues to read as follows:

Authority: 33 U.S.C. 1903; 46 U.S.C. 3703, 3703a (note); 49 CFR 1.46. Subparts G, H, and I are also issued under section 4115(b), Pub. L. 101–380, 104 Stat. 520; Pub. L. 104–55, 109 Stat. 546.

2. The subpart heading of subpart G is revised to read as follows:

Subpart G—Interim Measures For Certain Tank Vessels Without Double Hulls Carrying Petroleum Oils

3. The subpart heading of subpart H is revised to read as follows:

Subpart H—Interim Measures For Certain Tank Vessels Without Double Hulls Carrying Animal Fat or Vegetable Oil

4. The subpart heading of subpart I is revised to read as follows:

Subpart I—Interim Measures For Certain Tank Vessels Without Double Hulls Carrying Other Non-Petroleum Oil

Dated: January 3, 1997.

Robert E. Kramek,

Admiral, U.S. Coast Guard Commandant.

[FR Doc. 97–471 Filed 1–9–97; 8:45 am]

BILLING CODE 4910–14–M

federal register

Friday
January 10, 1997

Part IV

Federal Emergency Management Agency

Hotel and Motel Fire Safety Act; National Master List; Notice

FEDERAL EMERGENCY MANAGEMENT AGENCY

Changes to the Hotel and Motel Fire Safety Act; National Master List

AGENCY: United States Fire Administration, FEMA.

ACTION: Notice.

SUMMARY: The Federal Emergency Management Agency (FEMA or Agency) gives notice of additions and corrections/changes to, and deletions from, the national master list of places of public accommodations that meet the fire prevention and control guidelines under the Hotel and Motel Fire Safety Act.

EFFECTIVE DATE: February 10, 1997.

ADDRESSES: Comments on the master list are invited and may be addressed to the Rules Docket Clerk, Federal Emergency Management Agency, 500 C Street SW., room 840, Washington, D.C. 20472, (fax) (202) 646–4536. To be added to the National Master List, or to make any other change to the list, please see Supplementary Information below.

FOR FURTHER INFORMATION CONTACT: John Ottoson, Fire Management Programs Branch, United States Fire Administration, Federal Emergency Management Agency, National Emergency Training Center, 16825 South Seton Avenue, Emmitsburg, MD 21727, (301) 447–1272.

SUPPLEMENTARY INFORMATION: Acting under the Hotel and Motel Fire Safety Act of 1990, 15 U.S.C. 2201 note, the United States Fire Administration has worked with each State to compile a national master list of all of the places of public accommodation affecting commerce located in each State that meet the requirements of the guidelines under the Act. FEMA published the national master list in the Federal Register on Friday, June 21, 1996, 61 FR 32036—32256.

Parties wishing to be added to the National Master List, or to make any other change, should contact the State office or official responsible for compiling listings of properties which comply with the Hotel and Motel Fire Safety Act. A list of State contacts was published in 61 FR 32032, also on June 21, 1996. If the published list is unavailable to you, the State Fire Marshal's office can direct you to the appropriate office. The Hotel and Motel Fire Safety Act of 1990 National Master List is now accessible electronically. The National Master List Web Site is located at: http://www.usfa/fema.gov/hotel/index.htm.

Visitors to this web site will be able to search, view, download and print all or part of the National Master List by State, city, or hotel chain. The site also provides visitors with other information related to the Hotel and Motel Fire Safety Act. Instructions on gaining access to this information are available as the visitor enters the site.

Periodically FEMA will update and redistribute the national master list to incorporate additions and corrections/changes to the list, and deletions from the list, that are received from the State offices. Each update contains or may contain three categories: ''Additions;'' ''Corrections/changes;'' and ''Deletions.'' For the purposes of the updates, the three categories mean and include the following:

''Additions'' are either names of properties submitted by a State but inadvertently omitted from the initial master list or names of properties submitted by a State after publication of the initial master list;

''Corrections/changes'' are corrections to property names, addresses or telephone numbers previously published or changes to previously published information directed by the State, such as changes of address or telephone numbers, or spelling corrections; and

''Deletions'' are entries previously submitted by a State and published in the national master list or an update to the national master list, but subsequently removed from the list at the direction of the State.

Copies of the national master list and its updates may be obtained by writing to the Government Printing Office, Superintendent of Documents, Washington, DC 20402–9325. When requesting copies please refer to stock number 069–001–00049–1.

Dated: January 6, 1997.

H. Crane Miller,

Legislative and Regulatory Counsel.

THE HOTEL AND MOTEL FIRE SAFETY ACT OF 1990 NATIONAL MASTER LIST 12/19/96 UPDATE

Index and Property Name	PO box/Rt. No. and street address	City, State/Zip	Phone
Additions			
AK:			
AK0051 WEST COAST INTERNATIONAL INN	3333 W. INTERNATIONAL AIRPORT R.	ANCHORAGE, AK 99502	(907) 243–2233
CA:			
CA1484 IONE HOTEL	25 W. MAIN ST.	IONE, CA 95640	(209) 274–6082
CA1483 REGENCY PLAZA HOTEL	6161 W. CENTURY BLVD	LOS ANGELES, CA 90045	(310) 649–1400
DC:			
DC0059 CLUB QUARTERS	839 17TH STREET, N.W	WASHINGTON, DC 20006	(202) 463–6400
DC0060 GEORGE WASHINGTON UNIVERSITY INN	824 NEW HAMPSHIRE AVE., N.W.	WASHINGTON, DC 20037	(202) 337–6620
DC0058 ONE WASHINGTON CIRCLE HOTEL	ONE WASHINGTON CIRCLE, N.W.	WASHINGTON, DC 20037	(202) 872–1680
IA:			
IA0168 JUMER'S CASTLE LODGE	900 SPRUCE HILLS DRIVE	BETTENDORF, IA 52722	(800) 285–8637
IA0169 HOLIDAY INN	1050 6TH AVENUE	DES MOINES, IA 50314	(515) 283–0151
MS:			
MS0113 STUDIO PLUS AT JACKSON	800 RIDGEWOOD ROAD	RIDGELAND, MS 39157	(601) 956–0884
NC:			
NC0373 STUDIO PLUS AT CARY	600 WESTON PARKWAY	CARY, NC 27513	(919) 677–9910
NC0371 STUDIO PLUS AT TYVOLA	5830 WESTPARK DRIVE	CHARLOTTE, NC 28217	(704) 527–1960
NC0370 STUDIO PLUS AT UNIVERSITY PLACE	723 EAST MCCULLOUGH DRIVE.	CHARLOTTE, NC 28262	(704) 510–0108
NC0375 STUDIO PLUS AT DURHAM	2504 NC HIGHWAY 54	DURHAM, NC 27713	(919) 361–1853
NC0369 HOLIDAY INN FOUR SEASONS	3121 HIGH POINT ROAD	GREENSBORO, NC 27407	(910) 292–9161
NC0372 STUDIO PLUS AT WENDOVER	1705 STANLEY ROAD	GREENSBORO, NC 27407	(704) 547–0405

THE HOTEL AND MOTEL FIRE SAFETY ACT OF 1990 NATIONAL MASTER LIST 12/19/96 UPDATE—Continued

Index and Property Name	PO box/Rt. No. and street address	City, State/Zip	Phone
NC0374 STUDIO PLUS AT RALEIGH	921 WAKE TOWNE DRIVE	RALEIGH, NC 27609	(919) 546–0879
ND:			
ND0091 SLEEP INN	1921 11 STREET SW	FARGO, ND 58103.	(701) 281–8240
NY:			
NY0636 ROARING BROOK RANCH & TENNIS COURT.	RT. 9N	LAKE GEORGE, NY 12845	(518) 668–5767
TX:			
TX0708 HAMPTON INN COLLEGE STATION	320 SOUTH TEXAS AVE	COLLEGE STATION, TX 77840.	(800) 426–7866
TX0706 MISS MOLLY'S HOTEL	109½ WEST EXCHANGE AVE.	FORT WORTH, TX 76106	(800) 996–6559
TX0707 HAMPTON INN I–10 WEST	11333 KATY FRWY	HOUSTON, TX 77079	(713) 935–0022
TX0712 LA POSADA HOTEL/SUITES	1000 ZARAGOSA STREET	LAREDO, TX 78040.	(210) 722–1701
TX0709 CAMBERLEY GUNTER HOTEL	205 EAST HOUSTON STREET.	SAN ANTONIO, TX 78205	(210) 227–3241
TX0711 CLUB HOTEL BY DOUBLETREE-SAN ANTONIO AIRPORT.	1111 N.E. LOOP 410	SAN ANTONIO, TX 78209	(210) 828–9031
VA:			
VA0660 COOL HARBOR MOTEL	141 WEST 15TH STREET	FRONT ROYAL, VA 22630	(540) 635–2191
VA0659 DAYS INN MARINA	1631 BAYVILLE STREET	NORFOLK, VA 23503	(757) 583–4521
VT:			
VT0263 RADISSON HOTEL	2 BURLINGTON SQUARE	BURLINGTON, VT 05401	(802) 658–6500
VT0266 RADISSON HOTEL	60 BATTERY ST	BURLINGTON, VT	
VT0264 INN AT WEATHERSFIELD	ROUTE 106	PERKINSVILLE, VT.	(802) 263–9217
VT0267 HOWARD JOHNSON	410 SHELBURNE RD	S. BURLINGTON, VT	
VT0265 ECONO LODGE (SPRUCE BUILDING)	1961 SHELBURNE RD	SHELBURNE, VT	(802) 985–3377
WV:			
WV0245 DAYS INN, INC.—MAIN—2 BLDGS	5196 RT. 60	HUNTINGTON, WV 25705	(304) 733–4477
WV0246 MOTEL INN	3441 RT. 60 E.	HUNTINGTON, WV 25504	(304) 736–9772
CORRECTIONS/CHANGES			
CA:			
CA0482 RENAISSANCE LOS ANGELES HOTEL	9620 AIRPORT BLVD	LOS ANGELES, CA 90045	(310) 337–2800
IA:			
IA0031 WYNDHAM FIVE SEASONS MOTEL	350 1ST AVE. NE	CEDAR RAPIDS, IA 52401	(319) 363–8161
NC:			
NC0056 BEST WESTERN HOTEL CROWN PARK	4620 S. MIAMI BLVD	DURHAM, NC 27703	(919) 941–6066
NY:			
NY0616 HOLIDAY INN EXPRESS—TURF ON WESTERN AVENUE.	1442 WESTERN AVENUE	ALBANY, NY 12203.	(518) 438–0001
TX:			
TX0080 DOUBLE HOTEL AT CAMPBELL CENTER	8250 N.CENTRAL EXWY	DALLAS, TX 75206	(210) 740–0199
TX0306 RADISSON HOTEL DALLAS	1893 W. MOCKINGBIRD LN	DALLAS, TX 75235.	(214) 634–8850
TX0703 WYNDHAM ANATOILE	2201 STEMMONS FRWY	DALLAS, TX 75207.	(214) 748–1200
TX0554 WYNDHAM DALLAS MARKET CENTER	2015 MARKET CENTER BLVD.	DALLAS, TX 75027.	(214) 742–8686
VA:			
VA0294 DOUBLETREE—TYSONS CORNER	7801 LEESBURG PIKE	FALLS CHURCH, VA 22043	(703) 893–1340
VT:			
VT0004 HO JO INN	573 N. MAIN ST.	BARRE CITY, VT 05678	
VT0005 KNOLL MOTEL MAIN BUILDING	1015 N. MAIN ST.	BARRE CITY, VT 05678	
VT0008 SOUTHSHIRE INN	124 ELM ST.	BENNINGTON, VT 05201	(802) 447–3839
VT0013 ECONO LODGE	243 CANAL ST.	BRATTLEBORO, VT 05301	
VT0246 MOUNTAIN SPORT INN	KILLINGTON RD.	KILLINGTON, VT 05751	
VT0053 COLONIAL MOTEL ANNEX #1	93 MAIN ST.	LUDLOW, VT 05149.	
VT0063 SWIFT HOUSE INN	25 STEWART LN	MIDDLEBURY, VT 05753	
VT0077 COUNTRY GARDEN INN	37 MAIN ST.	QUECHEE, VT 05059	(802) 296–6978
VT0083 COMFORT INN	19 ALLEN ST.	RUTLAND CITY, VT 05201	
VT0084 HOGGE PENNY MOTOR INN	RT. 4	RUTLAND CITY, VT 05701	
VT0085 HOLIDAY INN	RT. 7 S.	RUTLAND CITY, VT 05701	
VT0089 ECONOMY INNS	2040 WILLISTON RD	SOUTH BURLINGTON, VT 05403.	(802) 658–5660
VT0211 RODEWAY INN	1860 SHELBURNE RD	SOUTH BURLINGTON, VT 05403.	
VT0221 ANDIRONS MOTOR LODGE	RT. 100	WEST DOVER, VT 05356	
VT0175 CANTERBURY HOUSE B & B	21 PLEASANT ST.	WOODSTOCK, VT 05091	(802) 457–3843
WV0122 HOLIDAY INN GATEWAY	6007 RT. 60	HUNTINGTON, WV 25504	(304) 736–8974
Deletions			
NC:			
NC0286 DOUBLETREE CLUB HOTEL	895 WEST TRADE STREET	CHARLOTTE, NC 28202	(704) 347–0070
NC0211 FAIRFIELD INN CHARLOTTE NE	5415 N. I–85 SERVICE RD	CHARLOTTE, NC 28213	(704) 596–2999

THE HOTEL AND MOTEL FIRE SAFETY ACT OF 1990 NATIONAL MASTER LIST 12/19/96 UPDATE—Continued

Index and Property Name	PO box/Rt. No. and street address	City, State/Zip	Phone
NC0268 HOLIDAY INN LAURINBURG	15401 BY PASS	LAURINBURG, NC 28352	(919) 276–6555
NC0269 HOLIDAY INN SALISBURY	PO BOX 1925, 530 JAKE ALEXANDER BLVD. S.	SALISBURY, NC 28144	(704) 638–0311
TX:			
TX0320 MISS MOLLY'S HOTEL	109½ W. EXCHANGE AVE	FORT WORTH, TX 76106	(800) 996–6559
TX0283 HOUSTON MARRIOTT WESTSIDE	13210 KATY FRWY	HOUSTON, TX 77079	(713) 558–8338
VT:			
VT0256 HOLIDAY INN BURLINGTON	1068 WILLISTON RD	BURLINGTON, VT 05403	(802) 863–6363
VT0261 SUPER 8 MOTEL	MAIN ST.	DERBY, VT 05829	
VT0262 COMFORT INN	117 STRONGS AVE	RUTLAND, VT 05201	
VT0140 INN AT SUNDERLAND	RT. 7A	SUNDERLAND, VT 05250	(802) 362–4213
VT0155 INN AT WEATHERSFIELD	PO BOX 165, RT. 106	WEATHERSFIELD, VT 05151.	

[FR Doc. 97–611 Filed 1–9–97; 8:45 am]
BILLING CODE 6718–08–U

federal register

Friday
January 10, 1997

Part V

Department of the Interior

Fish and Wildlife Service

50 CFR Part 17

Endangered and Threatened Wildlife and Plants; Final Rules

DEPARTMENT OF THE INTERIOR

Fish and Wildlife Service

50 CFR Part 17

RIN 1018–AD48

Endangered and Threatened Wildlife and Plants; Determination of Endangered Status for the Plant Cordia Bellonis

AGENCY: Fish and Wildlife Service, Interior.

ACTION: Final rule.

SUMMARY: The Fish and Wildlife Service (Service) determines *Cordia bellonis* (no common name) to be endangered pursuant to the Endangered Species Act (Act) of 1973, as amended. This species is a shrub endemic to the island of Puerto Rico and it is restricted to three public forests—Maricao, Susua, and Rio Abajo. The species is threatened by habitat loss, some forest management practices, and restricted distribution. This final rule will implement the Federal protection and recovery provisions afforded by the Act for *Cordia bellonis.*

DATES: Effective February 10, 1997.

ADDRESSES: The complete file for this rule is available for inspection, by appointment, during normal business hours, at the Boquerón Field Office, U.S. Fish and Wildlife Service, P.O. Box 491, Boquerón, Puerto Rico 00622.

FOR FURTHER INFORMATION CONTACT: Ms. Marelisa Rivera at the Boquerón Field Office address (809/851–7297).

SUPPLEMENTARY INFORMATION:

Background

Cordia bellonis was described by Urban in 1899 from specimens collected by Paul Sintenis at ''Monte Alegrillo'' in the municipality of Maricao, Puerto Rico (Urban 1899). The name of ''Monte Alegrillo'' has disappeared from use, but according to Proctor (1991), N.L. Britton referred to ''Monte Alegrillo'' as the peak at the extreme head of the Rio Maricao, with an elevation of 900 meters. This type location was developed for the installation of telecommunication towers. Paul Sintenis collected *Cordia bellonis* in the area known as Indiera Fría. The species was also collected by Britton and Brown in 1915 from Monte Cerrote near Adjuntas (Proctor 1991). Britton and Wilson (1925) described the species as *Varronia bellonis* and identified its distribution as mountain-sides in the vicinity of Maricao. Liogier and Martorell (1982) stated that the species distribution was the mountain slopes and serpentine hills in northwestern districts of Puerto Rico. Proctor (1991) reported only 4 individuals of *Cordia bellonis* from Caín Alto Ward in the Maricao Commonwealth Forest. Breckon and Kolterman (1993) reported 87 individuals at 17 localities in three areas in Maricao. Half of the localities consist of isolated individuals.

The species was reported for the first time in Susúa in 1992, where a small population of 5 individuals was found (Breckon and Kolterman 1993). *Cordia bellonis* was also unknown from the Río Abajo Commonwealth Forest until it was found in 1994 (Federal Highway Administration and Puerto Rico Highway and Transportation Authority 1994). Approximately 118 individuals were found in 12 localities. Ninety-five (82 percent) of these individuals were removed for possible future reintroduction because of the construction of the road PR 10 (PR Highway and Transportation Authority 1995).

Cordia bellonis has been found in serpentine soils at Maricao and Susúa at road edges, river margins, and on steep slopes (Breckon and Kolterman 1993). In the Río Abajo Forest, the species was found either on sunny banks along dirt roads growing in thickets of vegetation or in open saddles between limestone hills (Federal Highway Administration and Puerto Rico Highway and Transportation Authority 1994).

Cordia bellonis is an arching to erect shrub of about 1 to 2 meters (3.3 to 6.6 feet) high with very slender twigs with short hairs. The leaves are alternate, oblong to oblong-lanceolate, 2 to 6 centimeters (0.79 to 2.36 inches) long, usually 2.5 to 3 times longer than wide. The corolla is white with 4 subcylindric lobes. The fruit is a pointed drupe, 5 millimeters (0.20 inches) in length (Proctor 1991). The white axillary flowers are unisexual and the plants are either male or female (dioecious) (Breckon and Kolterman 1993).

The species is threatened by habitat destruction and modification, forest management practices, and restricted distribution. Eighty-two percent of the individuals known from the Río Abajo Commonwealth Forest were removed from the forest for the construction of a highway. Breckon and Kolterman (1994) reported that 14 individuals from Maricao appeared to have been eliminated due to clearing along the roadside of the forest. In 1995, twenty additional individuals were apparently destroyed by the clearing which occurred for the reconstruction of Road 362 in the Camp Santana area. Restricted distribution coupled with the requirement for adequate numbers of both male and female plants in a viable population are limiting factors for the species. In a large number of the localities where the species is found, the shrub occurs as isolated individuals. Because of forest destruction, less than half of the individuals previously known remain in these three forests.

Previous Federal Action

Cordia bellonis was designated a candidate species in the Federal Register notice of review for plant taxa dated September 30, 1993 (58 FR 51144). The species was recommended for listing by Proctor (1991) in a Status Report prepared for the species. In further studies conducted for the species, Breckon and Kolterman (1993) also recommended the species for listing. *Cordia bellonis* is considered to be a critical plant by the Natural Heritage Program of the Puerto Rico Department of Natural and Environmental Resources. A proposed rule to list *Cordia bellonis* as endangered was published on September 28, 1995 (60 FR 50176).

The processing of this final rule conforms with the Service's final listing priority guidance published in the Federal Register on May 16, 1996 (61 FR 24722). The guidance clarifies the order in which the Service will process rulemakings following two related events—(1) the lifting, on April 26, 1996, of the moratorium on final listings imposed on April 10, 1995 (Public Law 104–6), and (2) the restoration of significant funding for listing through the passage of the omnibus budget reconciliation law on April 26, 1996, following severe funding constraints imposed by a number of continuing resolutions between November 1995 and April 1996. The guidance calls for giving highest priority to handling emergency situations (Tier 1) and second highest priority (Tier 2) to resolving the listing status of the outstanding proposed listings. This final rule falls under Tier 2. At this time, there are no pending Tier 1 actions. In the development of this final rule, the Service has conducted an internal review of all available information. Based on this review, the Service has determined that there is no new information that would substantively affect this listing decision and that additional public comment is not warranted.

Summary of Comments and Recommendations

In the September 28, 1995, proposed rule and associated notifications, all interested parties were requested to submit factual reports or information

that might contribute to the development of a final rule. Appropriate agencies of the Commonwealth of Puerto Rico, Federal agencies, scientific organizations, and interested parties were requested to comment. Newspaper notices inviting general public comment were published in ''The San Juan Star'' on October 14, 1995, and in ''El Nuevo Día'' on October 16, 1995. Two comment letters were received and are discussed as follows. Dr. G.J. Breckon and Dr. D.A. Kolterman, both from the University of Puerto Rico, Mayaguez Campus, supported the proposal to list *Cordia bellonis* as an endangered species. The U.S. Department of the Army, Jacksonville District Corps of Engineers, Antilles Office, provided comments, but did not indicate support or objection to listing the species. Comments supplying supplemental data have been incorporated into the Background section of this rule, as appropriate. A public hearing was neither requested nor held.

The Service also solicited the expert opinions of three appropriate and independent specialists regarding pertinent scientific or commercial data and assumptions relating to distribution, abundance, status, and biological and ecological information for *Cordia bellonis.* Two responses from the specialists were received; they supported the listing of the species as an endangered species, and supplemental data was incorporated into this final rule.

Summary of Factors Affecting the Species

After a thorough review and considertion of all information available, the Service has determined that *Cordia bellonis* should be classified as an endangered species. Procedures found at section 4(a)(1) of the Endangered Species Act and regulations implementing the listing provisions of the Act (50 CFR part 424) were followed. A species may be determined to be an endangered or threatened species due to one or more of the five factors described in section 4(a)(1). These factors and their application to *Cordia bellonis,* are as follows:

A. *The present or threatened destruction, modification, or curtailment of its habitat or range.* Destruction and modification of the habitat is considered one of the most significant factors affecting the numbers and distribution of *Cordia bellonis.* This species is only known from three areas in Puerto Rico; Maricao, Susúa, and Río Abajo.

In Maricao, the species is found at 17 localities in three areas, for a total of 87 individuals. Thirty-four of these individuals have been eliminated due to clearing along the roadside and the reconstruction of Road 362. Half of the localities consist of isolated individuals. The dioecious condition of the species is a factor limiting reproduction by these individuals. Because the majority of these individuals occur along both sides of two public roads, maintenance of road sides, as well as fires and vandalism, may result in the loss of these individuals. In Susúa, a small population of only 5 individuals was found in 1992. The species was previously unknown from this area. This small population may be affected by forest management practices. *Cordia bellonis* was also unknown from the Río Abajo forest until it was found in 1994. Approximately 118 individuals were found in 12 localities. Ninety-five individuals were located along the construction route for a highway (which is now completed) and were removed for possible future transplantation. Of the remaining 23 individuals, 13 have been found in an area designated for compensation (mitigation) for the highway and 10 are found in highway rights-of-way. The species is also known from a private landholding where extraction of fill material for the construction of the road will likely result in the loss of these plants. The rareness and restricted distribution make this species vulnerable to habitat destruction and modification.

B. *Overutilization for commercial, recreational, scientific, or educational purposes.* Taking for these purposes has not been a documented factor in the decline of this species.

C. *Disease or predation.* Disease and predation have not been documented as factors in the decline of this species.

D. *The inadequacy of existing regulatory mechanisms.* The Commonwealth of Puerto Rico has adopted a regulation that recognizes and provides protection to certain Commonwealth listed species. However, *Cordia bellonis* is not yet on the Commonwealth list. Federal listing will provide immediate protection to the species, and by virtue of an existing section 6 Conservation Agreement with the Commonwealth, listing will also assure the addition of this species to the Commonwealth list and enhance its possibilities for funding needed research.

E. *Other natural or manmade factors affecting its continued existence.* Two significant factors affecting this species are its limited distribution and dioecious condition. The limited distribution of this species makes it particularly vulnerable to extinction from naturally occurring events such as fire and local management practices. As a dioecious plant, *Cordia bellonis* requires outcrossing to successfully reproduce. Being dioecious creates a limiting factor affecting the continued existence of this rare plant since most remaining individuals are widely separated from each other and, therefore, unlikely to reproduce.

The Service has carefully assessed the best scientific and commercial information available regarding the past, present, and future threats faced by this species in determining to make this rule final. Based on this evaluation, the preferred action is to list *Cordia bellonis* as endangered. The rarity of this plant makes the species vulnerable to the loss of any individual. Only 81 individuals of *Cordia bellonis* are known to occur in the wild. Habitat modification may dramatically affect this endemic plant. Therefore, endangered, rather than threatened, status is considered an accurate assessment of the species' condition. The reasons for not designating critical habitat for this species are discussed in the ''Critical Habitat'' section of this rule.

Critical Habitat

Critical habitat is defined in section 3 of the Act as: (i) the specific areas within the geographical area occupied by a species, at the time it is listed in accordance with the Act, on which are found those physical or biological features (I) essential to the conservation of the species and (II) that may require special management considerations or protection and; (ii) specific areas outside the geographical area occupied by a species at the time it is listed, upon a determination that such areas are essential for the conservation of the species. ''Conservation'' means the use of all methods and procedures needed to bring the species to the point at which listing under the Act is no longer necessary.

Section 4(a)(3) of the Act, as amended, and implementing regulations (50 CFR 424.12) require that, to the maximum extent prudent and determinable, the Secretary designate critical habitat at the time the species is determined to be endangered or threatened. The Service finds that designation of critical habitat is not prudent for *Cordia bellonis.* Service regulations (50 CFR 424.12 (a)(1)) state that designation of critical habitat is not prudent when one or both of the following situations exist—(1) The species is threatened by taking or other human activity, and identification of critical habitat can be expected to increase the degree of threat to the

species, or (2) such designation of critical habitat would not be beneficial to the species.

Populations of *Cordia bellonis* are small and accessible. Vandalism and cutting could seriously affect the survival of the species. Publication of critical habitat descriptions and maps in the Federal Register would increase the likelihood of such activities. The Service believes that Federal involvement in the areas where this plant occurs can be identified without the designation of critical habitat. All involved parties and landowners have been notified of the location and importance of protecting this species' habitat. Protection of this species' habitat will also be addressed through the recovery process and through the section 7 jeopardy standard. The precarious status of *Cordia bellonis* necessitates identical threshholds for determining adverse modification of critical habitat and jeopardizing the continued existence of the species. Therefore, no additional protection from designating critical habitat would occur for this species.

Available Conservation Measures

Conservation measures provided to species listed as endangered or threatened under the Act include recognition, recovery actions, requirements for Federal protection, and prohibitions against certain practices. Recognition through listing encourages and results in conservation actions by Federal, Commonwealth, and private agencies, groups, and individuals. The Act provides for possible land acquisition and cooperation with the States and requires that recovery actions be carried out for all listed species. The protection required of Federal agencies and the prohibitions against certain activities involving listed plants are discussed, in part, below.

Section 7(a) of the Act, as amended, requires Federal agencies to evaluate their actions with respect to any species that is proposed or listed as endangered or threatened and with respect to its critical habitat, if any is being designated. Regulations implementing this interagency cooperation provision of the Act are codified at 50 CFR part 402. Section 7(a)(2) requires Federal agencies to ensure that activities they authorize, fund, or carry out are not likely to jeopardize the continued existence of the species or destroy or adversely modify its critical habitat. If a Federal action may adversely affect a listed species or its critical habitat, the responsible Federal agency must enter into formal consultation with the Service.

The majority of the individuals of *Cordia bellonis* known from Maricao are found along both sides of roads PR #120 and PR #362. Any widening of these roads, installation of water and sewer pipelines, and the installation of powerlines along these roads may adversely affect the species. These types of activities could be funded by Federal agencies (for example, the Federal Highway Administration, U.S. Housing and Urban Development, and Rural Development). *Cordia bellonis* was seriously affected by the construction of a highway in the Río Abajo Commonwealth Forest. This road was funded by the Federal Highway Administration and 82 percent of the individuals of *Cordia bellonis* were removed from the Forest for possible future transplantation.

The Act and its implementing regulations set forth a series of general prohibitions and exceptions that apply to all endangered plants. All prohibitions of section 9(a)(2) of the Act, implemented by 50 CFR 17.61, apply. These prohibitions, in part, make it illegal for any person subject to the jurisdiction of the United States to import or export, transport in interstate or foreign commerce in the course of a commercial activity, sell or offer for sale in interstate or foreign commerce, or remove and reduce the species to possession from areas under Federal jurisdiction. In addition, for plants listed as endangered, the Act prohibits the malicious damage or destruction on areas under Federal jurisdiction and the removal, cutting, digging up, or damaging or destroying of such plants in knowing violation of any State law or regulation, including State criminal trespass law. Certain exceptions to the prohibitions apply to agents of the Service and State conservation agencies.

The Act and 50 CFR 17.62 and 17.63 also provide for the issuance of permits to carry out otherwise prohibited activities involving endangered plants under certain circumstances. Such permits are available for scientific purposes and to enhance the propagation or survival of the species. Few trade permits for this plant will ever be sought or issued, since the species is not known to be in cultivation and is uncommon in the wild.

It is the policy of the Service, published in the Federal Register on July 1, 1994 (50 FR 34272), to identify to the maximum extent practicable those activities that would or would not constitute a violation of section 9 of the Act at the time of listing. The intent of this policy is to increase public awareness of the effect of listing on proposed or ongoing activities. The only known populations of *Cordia bellonis* are restricted to three Commonwealth forests—Maricao, Susúa and Río Abajo. Since there is no Federal ownership, and the species is not currently in trade, the only potential section 9 involvement would relate to removing or damaging the plant in knowing violation of a Commonwealth law or regulation, including Commonwealth criminal trespass law. Section 15.01(b) of the Commonwealth ''Regulation to Govern the Management of Threatened and Endangered Species in the Commonwealth of Puerto Rico'' states: ''It is illegal to take, cut, mutilate, uproot, burn or excavate any endangered plant species or part thereof within the jurisdiction of the Commonwealth of Puerto Rico.'' The Service is not aware of any otherwise lawful activities being conducted or proposed by the public that will be affected by this listing and result in a violation of section 9.

Questions regarding whether specific activites will constitute a violation of section 9 should be directed to the Field Supervisor of the Service's Boquerón Field Office (see **ADDRESSES** section). Requests for copies of the regulations on listed species and inquiries regarding prohibitions and permits should be addressed to U.S. Fish and Wildlife Service, Ecological Services (TE), 1875 Century Boulevard, Atlanta, Georgia 30345–3301 (404/679–7313).

National Environmental Policy Act

The Fish and Wildlife Service has determined that Environmental Assessment and Environmental Impact Statements, as defined under the authority of the National Environmental Policy Act of 1969, need not be prepared in connection with regulations adopted pursuant to section 4(a) of the Endangered Species Act of 1973, as amended. A notice outlining the Service's reasons for this determination was published in the Federal Register on October 25, 1983 (48 CFR 49244).

Required Determinations

The Service has examined this regulation under the Paperwork Reduction Act of 1995 and found it to contain no information collection requirements. This rulemaking was not subject to review by the Office of Management and Budget under Executive Order 12866.

References Cited

Breckon, G.J. and D.A. Kolterman. 1993. *Cordia bellonis* Urban [Boraginaceae]. Final report under cooperative agreement No. 14–16–0004–92–970 between U.S. Fish and Wildlife Service and the University of Puerto Rico, Mayaguez Campus. 14 pp.

Breckon, G.J. and D.A. Kolterman. 1994. *Cordia bellonis* Urban [Boraginaceae]. Final report under cooperative agreement No. 14–16–0004–93–973 between U.S. Fish and Wildlife Service and the University of Puerto Rico, Mayaguez Campus. 4 pp.

Britton, N.L. and P. Wilson. 1925. Scientific survey of Porto Rico and the Virgin Islands. Volume VI–Part 1. Botany of Porto Rico and the Virgin Islands. Descriptive flora-Spermatohyta (continued). New York Academy of Sciences, New York. 158 pp.

Federal Highway Administration and the Puerto Rico Highway and Transportation Authority. 1994. Biological Assessment Relocation of PR–10 Utuado, Puerto Rico. Unpublished Report.

Liogier, H.A. and L.F. Martorell. 1982. Flora of Puerto Rico and adjacent islands: a systematic synopsis. Editorial de la Universidad de Puerto Rico, Río Piedras, Puerto Rico. 342 pp.

Proctor, G. 1991. Puerto Rican plant species of concern: Status and recommendations. Miscellaneous Scientific Publication No. 2. Department of Natural and Environmental Resources, San Juan, Puerto Rico. Pp. 59–61.

Puerto Rico Highway and Transportation Authority. 1995. Report to U.S. Fish and Wildlife Service on plant species, Puerto Rican boa and monitoring program of the broad-winged hawk PR–10 Highway, Arecibo-Utuado. Unpublished report.

Urban. 1899. Symb. Antill. 1:393.

Author

The primary author of this final rule is Ms. Marelisa Rivera, Boquerón Field Office, U.S. Fish and Wildlife Service, P.O. Box 491, Boquerón, Puerto Rico 00622 (809/851–7297).

List of Subjects in 50 CFR Part 17

Endangered and threatened species, Exports, Imports, Reporting and recordkeeping requirements, and Transportation.

Regulation Promulgation

Accordingly, part 17, subchapter B of chapter I, title 50 of the Code of Federal Regulations, is amended as set forth below:

PART 17—[AMENDED]

1. The authority citation for part 17 continues to read as follows:

Authority: 16 U.S.C. 1361–1407; 16 U.S.C. 1531–1544; 16 U.S.C. 4201–4245; Pub. L. 99–625, 100 Stat. 3500; unless otherwise noted.

2. Section 17.12(h) is amended by adding the following, in alphabetical order under FLOWERING PLANTS, to the List of Endangered and Threatened Plants to read as follows:

§ 17.12 Endangered and threatened plants.

* * * * *

(h) * * *

Species		Historic range	Family	Status	When listed	Critical habitat	Special rules
Scientific name	Common name						
FLOWERING PLANTS							
*	*	*	*	*	*	*	
Cordia bellonis	None	U.S.A. (PR)	Boraginaceae	E	601	NA	NA
*	*	*	*	*	*	*	

Dated: December 6, 1996.

John G. Rogers,

Acting Director, Fish and Wildlife Service.

[FR Doc. 97–564 Filed 1–9–97; 8:45 am]

BILLING CODE 4310–55–P

DEPARTMENT OF THE INTERIOR

Fish and Wildlife Service

50 CFR Part 17

RIN 1018–AC64

Endangered and Threatened Wildlife and Plants; Determination of Endangered Status for the Cumberland Elktoe, Oyster Mussel, Cumberlandian Combshell, Purple Bean, and Rough Rabbitsfoot

AGENCY: Fish and Wildlife Service, Interior.

ACTION: Final rule.

SUMMARY: The Fish and Wildlife Service (Service) determines endangered status for five freshwater mussels—Cumberland elktoe (*Alasmidonta atropurpurea*), oyster mussel (*Epioblasma capsaeformis*), Cumberlandian combshell (*Epioblasma brevidens*), purple bean (*Villosa perpurpurea*), and rough rabbitsfoot (*Quadrula cylindrica strigillata*)—under the Endangered Species Act of 1973, as amended (Act). All five species have undergone significant reductions in range and numbers. They now exist as relatively small, isolated populations. The Cumberland elktoe exists in very localized portions of the Cumberland River system in Kentucky and Tennessee. The oyster mussel and Cumberlandian combshell persist at extremely low numbers in portions of the Cumberland and Tennessee river basins in Kentucky, Tennessee, and Virginia. The purple bean and rough rabbitsfoot currently survive in a few river reaches in the upper Tennessee River system in Tennessee and Virginia. These species were eliminated from much of their historic range by impoundments. Presently, these species and their habitats are being impacted by deteriorated water quality, primarily resulting from poor land-use practices. Because the species have such restricted ranges, they are vulnerable to toxic chemical spills.

DATES: Effective February 10, 1997.

ADDRESSES: The complete administrative file for this rule is available for inspection, by appointment, during normal business hours at the U.S. Fish and Wildlife Service, Asheville Field Office, 160 Zillicoa Street, Asheville, North Carolina 28801.

FOR FURTHER INFORMATION CONTACT: Mr. Richard G. Biggins at the above address, or telephone 704/258–3939, Ext. 228.

SUPPLEMENTARY INFORMATION:

Background

Cumberland elktoe (*Alasmidonta atropurpurea*)

The Cumberland elktoe, described by Rafinesque (1831), has a thin but not fragile shell. The shell's surface is smooth, somewhat shiny, and covered with greenish rays. Young specimens have a yellowish brown shell, and the shells of adults are generally black. The inside of the shell is shiny with a white, bluish white, or sometimes peach or salmon color (see Clarke (1981) for a

more complete description of the species).

The Cumberland elktoe is endemic to the Cumberland River system in Tennessee and Kentucky and is considered endangered in the State of Kentucky (Kentucky State Nature Preserves Commission (KSNPC) 1991). Historic records exist from the Cumberland River and from its tributaries entering from the south between the Big South Fork Cumberland River upstream to Cumberland Falls. Specimens have also been taken from Marsh Creek above Cumberland Falls. Old records of a related species, *Alasmidonta marginata*, exist from other creeks above Cumberland Falls; and there is speculation that these specimens were probably the Cumberland elktoe (Gordon 1991). Because the area above the falls has been severely impacted by coal mining, any populations of *A. atropurpurea* that might have existed there were likely lost (Gordon 1991). A record of one fresh dead specimen exists from the Collins River, Grundy County, Tennessee. However, extensive searches of the collection site and other sites in the Collins River and adjacent rivers have failed to find another specimen. If the species did exist in the Collins River, it has likely been extirpated.

Presently, three populations of the Cumberland elktoe are known to persist. The species survives in the middle sections of Rock Creek, McCreary County, Kentucky; the upper portions of the Big South Fork Cumberland River basin in McCreary County, Kentucky; and Scott, Fentress, and Morgan counties, Tennessee; and in Marsh Creek, McCreary County, Kentucky (Gordon 1991). Marsh Creek likely contains the best surviving elktoe population (Robert McCance, KSNPC, *in litt.*, 1994).

Any Cumberland elktoe populations that may have existed in the main stem of the Cumberland River were likely lost when Wolf Creek Dam was completed. Other tributary populations were likely lost due to the impacts of coal mining, pollution, and spills from oil wells. The upper Big South Fork basin population is threatened by coal mining runoff and could also be threatened by impoundments. The Marsh Creek population has been adversely affected and is still threatened by potential spills from oil wells. The Rock Creek population could be threatened by logging. All three populations, especially Rock Creek and Marsh Creek, are restricted to such short stream reaches that they could be eliminated by naturally occurring events such as toxic chemical spills.

Oyster mussel (*Epioblasma capsaeformis*)

The oyster mussel (Lea 1834) has a dull to sub-shiny yellowish- to green-colored shell with numerous narrow dark green rays. The shells of females are slightly inflated and quite thin towards the shell's posterior margin. The inside of the shell is whitish to bluish white in color (see Johnson (1978) for a more complete description of the species). The species is considered endangered in the States of Kentucky (KSNPC 1991) and Virginia (Neves 1991; Sue Bruenderman, Virginia Department of Game and Inland Fisheries (VDGIF), *in litt.*, 1992).

This species historically occurred throughout much of the Cumberlandian region of the Tennessee and Cumberland river drainages in Alabama, Kentucky, Tennessee, and Virginia (Gordon 1991), and Ortmann (1918) considered the species to be very abundant in the upper Tennessee River drainage.

Currently, within the Cumberland River, the oyster mussel survives as a very rare component of the benthic community in Buck Creek, Pulaski County, Kentucky; and it still survives in a few miles of the Big South Fork Cumberland River, McCreary County, Kentucky, and Scott County, Tennessee (Bakaletz 1991; McCance, *in litt.*, 1994). Within the Tennessee River system, only small populations survive at a few sites in the Powell River, Lee County, Virginia; and Hancock and Claiborne counties, Tennessee; in the Clinch River system, Scott County, Virginia, and Hancock County, Tennessee; Copper Creek (a Clinch River tributary), Scott County, Virginia; and Duck River, Marshall County, Tennessee. Although not seen in recent years, the species may still persist at extremely low numbers in the lower Nolichucky river, Cocke and Hamblem counties, Tennessee, and in the Little Pigeon River, Sevier County, Tennessee (Gordon 1991).

Much of the oyster mussel's historic range has been impounded by the Tennessee Valley Authority (TVA) and the U.S. Army Corps of Engineers (Corps). Other populations were lost due to various forms of pollution and siltation. The present populations are threatened by the adverse impacts of coal mining, poor land-use practices, and pollution, primarily from nonpoint sources. The Duck River population could be lost if the proposed Columbia Dam on the Duck River at Columbia, Tennessee, is completed as presently proposed. All the known populations are small and could be decimated by naturally occurring events such as toxic chemical spills.

Cumberlandian combshell (*Epioblasma brevidens*)

The Cumberlandian combshell (Lea 1831) has a thick, solid shell with a smooth to cloth-like outer surface. It is yellow to tawny brown in color with narrow green broken rays. The inside of the shell is white. The shells of females are inflated with serrated teeth-like structures along a portion of the shell margin (see Johnson (1978) for a more complete description of the species). The species is considered endangered in the States of Kentucky (KSNPC 1991) and Virginia (Neves 1991; Bruenderman, *in litt.*, 1992) and a species of special concern in Tennessee (Bogan and Parmalee 1983).

The Cumberlandian combshell historically existed throughout much of the Cumberlandian portion of the Tennessee and Cumberland river systems in Alabama, Kentucky, Tennessee, and Virginia (Gordon 1991). Presently, it survives in the Cumberland River basin, as a very rare component of the benthic community in Buck Creek, Pulaski County, Kentucky, and in a few miles of the Big South Fork Cumberland River, McCreary County, Kentucky, and Scott County, Tennessee (Bakaletz 1991; Gordon 1991; McCance, *in litt.*, 1994). A few old, non-reproducing individuals may also survive in Old Hickory Reservoir on the Cumberland River, Smith County, Tennessee (Gordon 1991).

Within the Tennessee River basin, the species still survives in very low numbers in the Powell and Clinch rivers, Lee and Scott counties, Virginia; and Claiborne and Hancock counties, Tennessee. The Clinch and Powell river populations are very small and in decline (Neves 1991; Richard Neves, Virginia Cooperative Fish and Wildlife Research Unit, personal communication, 1991).

Many of the Cumberlandian combshell's historic populations were lost when impoundments were constructed on the Tennessee and Cumberland rivers by TVA and the Corps. Other populations were lost due to various forms of pollution and siltation. The present populations are threatened by the adverse impacts of coal mining, poor land-use practices, and pollution, primarily from nonpoint sources. All the known populations are small and could be decimated by naturally occurring events such as toxic chemical spills.

Purple bean (*Villosa perpurpurea*)

The purple bean mussel (Lea 1861) has a small- to medium-sized shell. The shell's outer surface is usually dark brown to black with numerous closely spaced fine green rays. The inside of the shell is purple, but the purple may fade to white in dead specimens (see Bogan and Parmalee (1983) for a more complete description of the species). The species is considered endangered in Tennessee (Bogan and Parmalee 1983) and Virginia (Neves 1991; and Bruenderman, *in litt.*, 1992).

The purple bean historically occupied the upper Tennessee River basin in Tennessee and Virginia upstream of the confluence of the Clinch River (Gordon 1991). Ortmann (1918) considered the species ''not rare'' in Virginia. Presently, it survives in limited numbers at a few locations in the upper Clinch River basin, Scott, Tazewell, and Russell counties, Virginia; Copper Creek (a Clinch River tributary), Scott County, Virginia; Indian Creek (a Clinch River tributary), Tazewell County, Virginia (the Indian Creek location information was received from the Service's Abingdon Field Office, Abingdon, Virginia, after the close of the comment period. However, the purple bean was known to occur in the Clinch River, Tazewell County, Virginia, near the mouth of Indian Creek during the open comment period, and another federally listed mussel (tan riffleshell) was also found in the same reach of Indian Creek. The Service has determined that, because this new information did not substantially affect the listing decision, extending the public comment period was not warranted); Obed River, Cumberland and Morgan counties, Tennessee; Emory River just below its confluence with the Obed River, Morgan County, Tennessee; and Beech Creek, Hawkins County, Tennessee (Gordon 1991).

The purple bean populations in the lower Clinch, Powell, and Holston rivers were extirpated by reservoirs. The decline of the species throughout the rest of its range was likely due to the adverse impacts of coal mining, poor land-use practices, and pollution; primarily from nonpoint sources. The population centers that remain are so limited that they are very vulnerable to naturally occurring events such as toxic chemical spills.

Rough rabbitsfoot (*Quadrula cylindrica strigillata*)

The rough rabbitsfoot (Wright 1898) has an elongated heavy, rough textured, yellow- to greenish-colored shell. The shell's surface is covered with green rays, blotches, and chevron patterns. The inside of the shell is silvery to white with an iridescence in the posterior area of the shell (see Bogan and Parmalee (1983) for a more complete species description). The species is considered threatened in Virginia (Neves 1991; Bruenderman, *in litt.*, 1992) and a species of special concern in Tennessee (Bogan and Parmalee 1983).

Historically, this mussel was restricted to the upper Tennessee River basin in the Clinch, Powell, and Holston river systems (Gordon 1991). It still survives in all three of these systems, but only in limited areas and at low population levels. Populations persist in the Powell River, Lee County, Virginia; and Claiborne and Hancock counties, Tennessee; Clinch River, Scott County, Virginia; and Hancock County, Tennessee; Copper Creek (a Clinch River tributary), Scott County, Virginia; and North Fork Holston River, Washington County, Virginia (Gordon 1991).

The rough rabbitsfoot populations in the lower Clinch, Powell, and Holston river systems were extirpated by reservoirs. The decline of the species throughout the rest of its range was likely due to the adverse impacts of coal mining, poor land-use practices, and pollution, primarily from nonpoint sources. The population centers that remain are so limited that they are vulnerable to extirpation from naturally occurring events such as toxic chemical spills.

Previous Federal Action

In the Service's notice of review for animal candidates, published in the Federal Register of November 21, 1991 (56 FR 58804), the Cumberland elktoe, oyster mussel, Cumberlandian combshell, purple bean, and rough rabbitsfoot were included as Category 2 species. At that time, a Category 2 species was one that was being considered for possible addition to the Federal List of Endangered and Threatened Wildlife. Designation of Category 2 species was discontinued in the February 28, 1996, Federal Register notice (61 FR 7596). These mussels were approved for elevation to candidate status by the Service on August 30, 1993. A candidate species is a species for which the Service has sufficient information to propose it for protection under the Act. On August 25, 1992, the Service notified by mail (129 letters), potentially affected Federal and State agencies and local governments within the species' present range, and interested individuals that a status review of the above mentioned five mussels and the slabside pearlymussel (*Lexingtonia dolabelloides*) was being conducted. (The slabside pearlymussel has not been included in this final rule. Additional populations of this species were discovered and further evaluation is needed before a decision can be made regarding the species' need for Federal protection.)

Seven agencies responded to the August 25, 1992, notification. The U.S. Natural Resources Conservation Service (formerly the U.S. Soil Conservation Service) stated: ''It is not anticipated that any planned or current activities will adversely affect these species or their habitat.'' The KSNPC, the Kentucky Department of Environmental Protection, Tennessee Wildlife Resources Agency (TWRA), Virginia Department of Conservation and Recreation (VDCR), and VDGIF provided information on the decline and status of the species in their States.

The Duck River Agency (DRA) provided comments on the status of the oyster mussel in the Duck River. It stated that, as the Duck River population of the oyster mussel is extremely small, it is believed highly unlikely that the stream supports a viable population of *E. capsaeformis*. In contrast to DRA's statement, Don Hubbs (TWRA, *in litt.*, 1992) stated that fresh dead oyster mussel individuals (from young and older cohorts) were not uncommon in muskrat middens on the Duck River in Marshall County, Tennessee. The Service, however, currently has insufficient information to judge the species' long-term viability either in the Duck River or on a rangewide basis.

The DRA took issue with the Service's statement in the notification that the proposed Columbia Dam on the Duck River could eliminate the oyster mussel from the Duck River. It stated that current project alternatives under consideration by the DRA and TVA could result in a project that would flood less than one third of the area and would enhance the future viability of the population segment above the pool. The Service agrees that a smaller Columbia Dam pool would reduce the amount of the oyster mussel population lost to the direct effects of the dam. However, the details of these Columbia Dam alternatives have not been provided to the Service.

The DRA commented that statements in the mussel species accounts (Gordon 1991) used as an information source to prepare the August 25, 1992, notification contained language that appeared to indicate that the Service had already made a decision to list the species prior to receiving any comments

from the notification. The Service agrees that the species accounts, which were prepared by a non-Service biologist under contract to the Service, contain language regarding the need to reverse the species' decline as a means to preserve and recover the mussels. However, these statements, made by a Service contractor, do not represent a predecisional statement by the Service. Statements in the species accounts were considered along with all presently available information on these species, as well as information obtained through the notification and the proposed rule, when making the final decision regarding the status of the species.

The processing of this final rule conforms with the Service's final listing priority guidance published in the Federal Register on May 16, 1996 (61 FR 24722). The guidance clarifies the order in which the Service will process rulemakings following two related events—(1) the lifting, on April 26, 1996, of the moratorium on final listings imposed on April 10, 1995 (Public Law 104–6), and (2) the restoration of significant funding for listing through the passage of the omnibus budget reconciliation law on April 26, 1996, following severe funding constraints imposed by a number of continuing resolutions between November 1995 and April 1996. The guidance calls for giving highest priority to handling emergency situations (Tier 1) and second highest priority (Tier 2) to resolving the listing status of the outstanding proposed listings. This final rule falls under Tier 2. At this time, there are no pending Tier 1 actions.

In the development of this final rule, the Service has conducted an internal review of a draft of this rule and other Service-generated information. Based on this review, the Service has determined that there is no new information that would substantively affect this listing decision and that additional public comment is not warranted.

Summary of Comments and Recommendations

On July 14, 1994, a proposed rule was published in the Federal Register (59 FR 35901) stating that the Cumberland elktoe, oyster mussel, Cumberlandian combshell, purple bean, and rough rabbitsfoot were being considered for endangered species status under the Act. In the proposed rule, in legal notices (published in the *Kingsport Daily News,* Kingsport, Tennessee, on August 2, 1994; *Crossville Chronicle,* Crossville, Tennessee, and *Bristol Herald Courier,* Bristol, Virginia, on August 3, 1994; *Knoxville Journal,* Knoxville, Tennessee, on August 8, 1994; *Columbia Herald,* Columbia, Tennessee, on August 10, 1994; and *Nashville Banner,* Nashville, Tennessee, on August 17, 1994) and in letters dated July 26, 1994, the Service requested Federal and State agencies, local governments, scientific organizations, and interested parties to comment and submit factual reports and information that might contribute to development of a final determination for these five mussels, and provided notification that a public hearing on the proposal could be held, if requested.

In response to the above notifications, the Service received several public hearing requests from within the following counties—Fentress, Cumberland, and Marshall counties, Tennessee; and McCreary County, Kentucky. The Service held two public hearings (December 13, 1994, at the York Institute, Jamestown, Tennessee; and December 15, 1994, at the Marshall County Courthouse, Lewisburg, Tennessee), and reopened the comment period from November 23, 1994, to December 30, 1994. Notices of these hearings and the reopening of the comment period were published in the Federal Register on November 18, 1994, (59 FR 59200) and in the following newspapers—*Daily Herald,* Columbia, Tennessee, and *Bristol Herald Courier,* Bristol, Virginia, on November 20, 1994; *Knoxville News Sentinel,* Knoxville, Tennessee, and *Commonwealth Journal,* Somerset, Kentucky, on November 21, 1994; and *Nashville Banner,* Nashville, Tennessee, *Daily News of Kingsport,* Kingsport, Tennessee, and *Crossville Chronicle,* Crossville, Tennessee, on November 22, 1994. Additionally, the Service, by letters dated November 21, 1994, notified Federal and state agencies, local governments, scientific organizations, and interested parties of the public hearings and the reopening of the comment period.

The Service received nineteen written comments and eight oral comments on the proposal to list the five mussels. Numerous questions on the proposal and related issues were asked at the public hearings. Comments in support of the proposed rule were received from the Environmental Protection Agency (EPA); National Park Service, Big South Fork National River and Recreation Area; KSNPC; Kentucky Department of Fish and Wildlife Resources (KDFWR); Department of Fisheries and Wildlife Sciences, Virginia Polytechnic Institute and State University; Tennessee Department of Environment and Conservation (TDEC); VDCR; VDGIF; and two private individuals. The listing of one or more of these species was opposed by the DRA; Fentress County Utility District, Jamestown, Tennessee; and one individual. The remainder of the respondents expressed concerns over what impact these listings would have on various activities. The following is a summary of the comments, concerns, and questions (referred to as ''Issues'' for the purposes of this summary) regarding the proposed rule that were expressed in writing or presented orally at the public hearings. Comments of similar content have been grouped together.

Issue 1: One respondent expressed concern that listing the purple bean could significantly impact efforts to build a water supply reservoir on Clear Creek, an Obed River tributary, in Morgan County, Tennessee, and asked specific questions regarding how this reservoir project would impact the species.

Response: The purple bean is the only one of these five species that occurs in the Obed River system. However, based on available information, this species does not exist at the proposed reservoir site or in the area downstream of the site that would be significantly affected by the project. Therefore, because the Service does not anticipate that the project will have a significant impact on the purple bean, the listing will not significantly impact the reservoir project. Specific questions on how a reservoir, which will likely have only minimal, if any, impact to the species, might negatively or possibly positively affect the species cannot be fully evaluated until detailed project plans are available for review. These issues, however, would be addressed in any biological opinion that may be developed for this proposed project.

Issue 2: Several respondents expressed concern that listing these five mussels could have a significant impact on private landowners.

Response: Currently, there are 24 federally listed mussels in the Tennessee and Cumberland river systems. These species, many of which have been listed for over 10 years, have not had a significant impact on private lands activities (e.g., logging, agriculture, land development, and home construction). Therefore, based on this historic perspective, the Service does not anticipate that listing these additional species will have a significant impact on private landowners. In fact most individuals that own or farm lands along streams that are inhabited by listed aquatic species are unaware of the species' existence because their presence has never affected their activities.

Issue 3: One respondent requested information on the impact of this listing on mining activities.

Response: If a mining activity comes under the jurisdiction of a state or Federal agency and one of these five mussels or any other listed species may be in the project area, the project's impacts to the species must be considered. However, it has been the Service's experience, after dealing with hundreds of mining projects, that in nearly all cases where there is a conflict between endangered species and a mining project, the project is permitted with only minor modifications.

Issue 4: Several respondents expressed concern that the listing of the Cumberland elktoe could adversely impact the completion of a proposed water supply reservoir on Crooked Creek, a tributary of the Big South Fork of the Cumberland River, Fentress County, Tennessee.

Response: The Service does not believe the listing of the Cumberland elktoe will stop completion of the proposed Crooked Creek Reservoir. The Service is consulting with the Farm Services Agency on this project. A segment of the Cumberland elktoe population does exist at the site of the proposed reservoir. However, this population segment is small and likely is not essential to the species' survival and recovery. Therefore, based on available information, the Service does not anticipate that a jeopardy biological opinion will result from this consultation. The Service's biological opinion will outline measures to minimize incidental take of the elktoe and suggest conservation recommendations, but the project will not be blocked by the Federal listing of the elktoe.

Issue 5: Listing the Duck River population of the oyster mussel was questioned because it was felt that this population was not viable.

Response: The Duck River oyster mussel population may be currently below the number of individuals necessary to maintain long-term viability. However, that does not disqualify this population from protection under the Act. If the population is below the threshold number needed for long-term viability, the population could be augmented with juveniles produced through artificial propagation or with adults from another population.

Issue 6: In the proposed rule, the Service made reference to oyster mussels collected from a muskrat midden. One respondent questioned the Service's use of this information in its assessment of the Duck River's oyster mussel population.

Response: It is a common practice of the Service, other Federal and state agencies, and mussel researchers to utilize information from muskrat middens. Mussels deposited in middens by muskrats can not provide a quantitative assessment of mussel density, but observations of the numbers of specimens in a midden can provide insight into a species' status in the adjacent river reach.

Issue 7: Requests were made that the Service identify—(1) those activities that will not be considered likely to result in a violation of section 9 of the Act and (2) those activities that will be considered likely to result in violation of section 9 of the Act.

Response: This issue is addressed in the ''Available Conservation Measures'' section of this rule.

Issue 8: One respondent wanted to know what impact these listings would have on the placement of docks and piers into rivers inhabited by these mussels.

Response: There should be minimal impact on dock and pier construction as a result of this listing. The construction of piers and docks involves work in navigable waters of the United States and includes the discharge of dredge material back into the waterway. Thus, dock and pier construction comes under the Corps' permit authority pursuant to section 10 of the Rivers and Harbors Act (RHA) (33 U.S.C. 403) and section 404 of the Clean Water Act (CWA) (33 U.S.C. 1344). Thus, a permit must be received from the Corps prior to the construction of a dock or pier. If a federally listed species may be adversely impacted by this activity, the Corps must consult with the Service to determine if the project is likely to jeopardize the species' continued existence.

It is possible that construction of a few piers or docks could be delayed due to the presence of one of these species. However, it is unlikely that any projects would be stopped. Most piers and docks are constructed in pool habitat, and these mussels primarily inhabit relatively shallow riffles. Most piers and docks constructed on the rivers and streams inhabited by these mussels would be relatively small and have only minimal impact on the mussels. Additionally, from an historical perspective, the 24 mussel species that are already listed in the Tennessee and Cumberland river systems have had little impact on the issuance of permits for these structures.

Issue 9: One respondent asked what impact these listings would have on dredging and in-stream gravel mining projects.

Response: In-stream dredging and gravel mining involves work in navigable waters of the United States and can result in the discharge of dredge material back into the water. Thus, in-stream dredging and gravel mining comes under the Corps' permit authority pursuant to section 10 of the RHA (33 U.S.C. 403) and section 404 of the CWA (33 U.S.C. 1344). If a federally listed species may be adversely impacted by this activity, the Corps must consult with the Service to determine if the project is likely to jeopardize the species' continued existence.

It is possible that a few in-stream dredging and gravel mining projects could be impacted due to the presence of one of these species. However, it has been the experience of the Service that most of these projects can be designed in such a way (i.e., removing the gravel only from above the water line) that the project objectives and the needs of the species can be met. Additionally, as some of these newly listed species exist in areas that are already inhabited by listed mussels, the listing of these species that coexist with currently listed mussels will not add any additional permit restrictions to these areas.

Issue 10: Several respondents were concerned with the potential impacts these listings could have on water withdrawal projects.

Response: As water withdrawal projects often require construction of a structure in the water, these projects typically require a permit from the Corps under section 10 of the RHA (33 U.S.C. 403) and section 404 of the CWA (33 U.S.C. 1344). If a federally listed species may be adversely impacted by this activity, the Corps must consult with the Service to determine if the project is likely to jeopardize the species' continued existence. It is possible that a few water withdrawal projects that propose to extract a significant portion of a river's flow could be affected due to the presence of one of these species. However, if the water withdrawal project meets state water quality standards, it has generally been the Service's experience that endangered species will be protected without further significant restrictions.

Issue 11: Several respondents were concerned with the potential impacts these listings could have on waste water discharge projects.

Response: The potential exists for point discharges to impact these species, and there is an increasing demand for discharge permits in the Tennessee and Cumberland river systems. However, the States of

Kentucky, Tennessee, and Virginia, with assistance from and oversight by the EPA, set water quality standards that are presumably protective of aquatic life, including the 24 mussel species that are already listed in the Tennessee and Cumberland river systems. Thus, there should be no significant increase in regulatory burden regarding waste water discharge permits as a result of listing these five species in areas where these species coexist with one or more of the mussels that are currently listed. If new information indicates that current water quality criteria are insufficient to prevent the likelihood of jeopardy to these freshwater mussels, new standards may be needed. If revised standards are implemented, some discharge permits could be further regulated if these species are present. However, in areas where listed mussels already exist, the listing of these five mussels will not add any significant additional burden.

Issue 12: Several respondents were concerned with the degree of impact these listings might have on landowners who have erosion problems on their land.

Response: Siltation can negatively impact the aquatic environment. However, based on a historical perspective, the Act has not impacted individual landowners with erosion problems that might affect the 24 mussel species that are currently listed in the Tennessee and Cumberland river systems. Thus, the Service does not anticipate that the listing of these species will burden private landowners regarding this issue.

The Service, through a proactive and coordinated effort with other agencies, conservation groups, and local governmental bodies, is assisting willing private landowners in the restoration of riparian habitat to control siltation. This program (''Partners for Wildlife'') is currently funding projects on the Clinch River (a Tennessee River tributary in eastern Tennessee and southwestern Virginia) and the Little Tennessee River (a Tennessee River tributary in western North Carolina). Both rivers have endangered fish and mussel fauna and this program has developed cooperative agreements with willing landowners to improve stream side habitat for the benefit of all aquatic species.

Issue 13: One respondent wanted to know what impact these listings would have on the use of pesticides.

Response: The EPA, during its pesticide registration process, consults with the Service to determine if a pesticide will likely jeopardize the continued existence of any federally listed species. If it is determined that the application of the chemical is likely to jeopardize a species, the Service provides reasonable and prudent chemical application alternatives that would avoid the likelihood of jeopardy. These recommendations generally suggest some type of application restriction (i.e., prohibit pesticide application within a prescribed distance from an inhabited stream reach) that would protect the species.

Although there may be some added restrictions to pesticide use as a result of these listings, the Service believes that the resulting impacts to pesticide users should be minimal. Many of the stream reaches inhabited by these five mussels are populated with previously listed mussels that have already been assessed for pesticide restrictions; many pesticides reviewed for registration are not believed to be harmful to mussels and no restrictions are applied to their use; and if a pesticide is found to be harmful to a species, there are often unrestricted, alternative chemicals that can be used to control the same pest.

Issue 14: One respondent wanted to know if the information that these rules are based on had been peer reviewed.

Response: The information utilized in determining to propose these species has been peer reviewed. On August 25, 1992, the Service mailed a summary of the available status information on the five species to 47 agencies, organizations, and individuals familiar with the status of freshwater mussels and solicited their comments on the need to propose these species. Prior and subsequent to the August 25, 1992, notification, a copy of the status report used to make the determination to propose these five species was sent to biologists and agencies familiar with the plight of these species. With the exception of the DRA, none of the respondents questioned the need to propose these species for Federal protection. (See the last paragraph under the ''Summary of Comments and Recommendations'' section for further information.)

Issue 15: One respondent was concerned that these listings could restrict the farming communities' use of fords (stream crossings).

Response: There are numerous active fords in the Tennessee and Cumberland river systems used by the farming community, and many of these fords are in streams inhabited by federally protected mussels. The Act has not restricted the use of these fords, and the listing of these five mussels will not alter this situation.

Issue 16: One respondent wanted to know if the Service planned to designate critical habitat for these five mussels.

Response: The Service is not and has no plans to designate critical habitat for these species (see the ''Critical Habitat'' section of this rule).

Issue 17: Several respondents were concerned that these listings would affect current farming methods in the watershed.

Response: The Service will encourage the use of buffer strips along water courses, reduction of pesticide and herbicide applications, and soil conservation practices that help control soil loss and siltation.

Issue 18: One respondent questioned the statement in the proposed rule that implicated poor land-use practices as a threat to these mussels, and the individual was concerned that the farming community might have been the primary target of this statement.

Response: Siltation from soil erosion is not just or primarily an agricultural problem. Any activity that removes natural vegetated ground cover (e.g., logging, bridge and road construction, mining, and land clearing for industrial and residential construction) can cause significant stream siltation if adequate control measures are not taken. Silt can have a devastating impact on aquatic ecosystems, especially those species that evolved in a relatively silt free environment. Mussels are filter feeders and they can live in one location for most of their lives. High silt loads disrupt their ability to feed and reproduce, and at extreme silt levels, they can be smothered under deep layers of silt.

As mentioned in response to Issue 12, the Service, through its ''Partners for Wildlife'' program, is working with willing landowners to assist in restoration of stream side habit to control siltation. The Service also encourages the use of ''Best Management Practices'' to control erosion and minimize the impacts of silt to aquatic resources.

Issue 19: One respondent wanted to know how the listing of the oyster mussel would affect the completion of Columbia Dam.

Response: The Service stated in a 1979 Biological Opinion that completion of a proposed reservoir project (Columbia Dam) on the Duck River in Maury and Marshall counties, Tennessee, would likely jeopardize the continued existence of two federally listed mussels. Although our Biological Opinion included reasonable and prudent alternatives that would have allowed the project to go forward, TVA has not implemented those measures and has been reevaluating the project and considered other alternatives to meet the project objectives. (A third

mussel listed prior to the issuance of the Biological Opinion is now known from the proposed flood pool.) Although the presence of a fourth endangered mussel (oyster mussel) may somewhat complicate this issue, any measures needed to avoid a jeopardy situation for the currently listed mussels would not be expected to change significantly with the addition of a fourth listed species.

Issue 20: One respondent noted that since species go extinct because of natural causes why should these species receive special protection.

Response: It is true that natural and catastrophic events over geological time have resulted in the extinction of millions of species. However, the rate of extinctions in the past couple of centuries has accelerated dramatically as a direct result of human activities. The Act specifically states that species of fish, wildlife, and plant are of value to this nation, and the Act requires the Department of the Interior to maintain a list of endangered and threatened species. The Service believes that these five mussels meet the criteria for the Act's protection (see the ''Summary of Factors Affecting the Species'' section of these rules).

Issue 21: One respondent suggested that the Service should postpone the decision to list the five species until Congress reauthorizes the Act.

Response: The Act as currently written requires the Department of the Interior to maintain a list of endangered and threatened species and the Act provides five criteria to consider when determining to list a species (see the ''Summary of Factors Affecting the Species'' section of these rules). Based on the best available information, these five species meet these criteria and qualify for the Act's protection. The Service believes that delaying these listings to await Congressional reauthorization would be a violation of existing Federal law.

Issue 22: One respondent wanted to know if a biological survey was required when a Federal permit was needed in areas inhabited by listed species and if a survey was needed, who would conduct the survey.

Response: Often the Service or other agencies have sufficient status information on the species in a project area, and no addtional site specific surveys are needed to determine project impacts to the species. However, if site-specific species information is unavailable or insufficient, a survey of the project impact area may be needed to fully assess the project's impacts. If a survey is needed, it is generally not conducted by the Service. Survey responsibility falls onto the permitting agency. However, the permitting agency usually requires the permit applicant to obtain the needed status information as part of the application process.

Issue 23: One respondent commented that the Service should initiate a massive education effort with the farm community to help build trust and encourage community involvement regarding the protection and recovery of aquatic species.

Response: The Service agrees that local community support is essential to fully protect and recover listed species. The Service has increased its efforts in this area through ''Partners for Wildlife'' and other programs that work with community leaders and willing landowners to build the necessary partnerships.

Issue 24: The VDCR stated that the rough rabbitsfoot was listed as threatened by the VDGIF. Thus, they felt it might be more appropriate to list this species as threatened rather than endangered.

Response: The rough rabbitsfoot is listed as a threatened species by the VDGIF. However, this list was developed in the late 1980's and published in 1991 (Neves 1991). Since the publication of the state list, the rough rabbitsfoot has declined significantly in the Clinch River and may no longer survive in Copper Creek (Neves, personal communication, 1995). Neves (personal communication, 1995), was a primary consultant used by the VDGIF in determining state status for the rough rabbitsfoot, and he plans to recommend State endangered status for this species when the state list is revised. Additionally, he recommended Federal endangered status for this species in response to the proposed rule (Neves, *in litt.*, 1994). Based on this information and the information presented in the ''Background'' and the ''Summary of Factors Affecting the Species'' sections of these rules, the Service believes that endangered status is appropriate for the rough rabbitsfoot.

Issue 25: The EPA requested that the Service clarify what it meant by the following statement that appeared in the July 14, 1994, proposed rule:

> Existing authorities available to protect aquatic systems, such as the Clean Water Act, administered by the Environmental Protection Agency (EPA) and the Army Corps of Engineers, have not been fully utilized and may have led to the degradation of aquatic environments in the Southeast Region, thus resulting in a decline of aquatic species.

Response: Through EPA's implementation of the CWA, water quality has been improved and mussel populations have benefited. However, in spite of general water quality improvements, numerous freshwater mussel populations in the southeastern United States are continuing to decline even in areas that appear to have suitable physical habitat. The Service believes that it is likely that some insidious environmental factor(s), possibly contaminants, may be adversely affecting the growth, reproduction, or survival of these populations. Of all the potential impacts to mussels, less is known about the potential effects of contaminants on these species. The Service believes that EPA could, through the CWA, play a more active role in identifying potential contaminant impacts to mussels.

Issue 26: The EPA also requested that the Service identify in any final rule specific deficiencies and/or inadequacies in the following areas related to their implementation of the CWA in the States of Tennessee and Kentucky—state adopted narrative and numeric water quality criteria; state water use classifications by streams occupied by the five mussels; aquatic life criteria guidance values; and National Pollutant Discharge Elimination System (NPDES) permit procedures.

Response: As mentioned in response to Issue 25, little is known about the potential impacts of contaminants on freshwater mussels. Research is needed to address the lethal and sublethal effects of acute and chronic exposure of toxins to all life stages of freshwater mussels. This research will entail identifying appropriate surrogate species, devising test protocols, and conducting studies to evaluate the protectiveness of these criteria. Additionally, the Service is currently working with EPA to develop a memorandum of agreement (MOA) that will address how EPA and the Service will interact relative to CWA water quality criteria, standards, and NPDES permits within the Service's Southeast Region. Until the MOA is developed and data are available to fully evaluate the effectiveness of current national water quality criteria and standards and the need for site-specific criteria, the Service believes it is premature to attempt, in this final rule, to address any specific deficiencies and/or inadequacies that may exist in EPA's implementation of the CWA regarding the protection of water quality.

The Service also solicited the expert opinions of ten appropriate and independent mussel specialists regarding the pertinent scientific or commercial data and assumptions relating to taxonomy, population status, and biological and ecological information on these five mussels. One

response from a specialist was received, and those comments were incorporated into this final rule.

Summary of Factors Affecting the Species

Section 4(a)(1) of the Act (16 U.S.C. 1531 *et seq.*) and regulations (50 CFR Part 424) issued to implement the listing provisions of the Act set forth the procedures for adding species to the Federal lists. A species may be determined to be an endangered or threatened species due to one or more of the five factors described in Section 4(a)(1). These factors and their application to the Cumberland elktoe (*Alasmidonta atropurpurea*), oyster mussel (*Epioblasma capsaeformis*), Cumberlandian combshell (*Epioblasma brevidens*), purple bean (*Villosa perpurpurea*), and rough rabbitsfoot (*Quadrula cylindrica strigillata*) are as follows:

A. *The present or threatened destruction, modification, or curtailment of its habitat or range.* Mussel populations throughout the Central and Eastern United States have been declining since modern civilization began to significantly alter aquatic habitats. The Ohio River drainage, which includes the Tennessee and Cumberland rivers, was a center for freshwater mussel evolution and historically contained about 127 distinct mussel species and subspecies. Of this once rich mussel fauna, 11 mussels are extinct, and 33 mussels (including the 5 species covered in this final rule) are classified as Federal endangered species. In less than 100 years, 35 percent of the Ohio River system's mussel fauna has either become extinct or federally endangered. No other wide-ranging faunal group in the continental United States has experienced this degree of loss within the last 100 years.

The mussel fauna in most streams of the Ohio River basin has been directly impacted by impoundments, siltation, channelization, and water pollution. Reservoir construction is the most obvious cause of the loss of mussel diversity in the basin's larger rivers. Most of the main stem of both the Tennessee and Cumberland rivers and many of their tributaries are impounded. For example, over 2,300 river miles or about 20 percent of the Tennessee River and its tributaries with drainage areas of 25 square miles or greater are impounded (TVA 1971). In addition to the loss of riverine habitat within impoundments, most impoundments also seriously alter downstream aquatic habitat; and mussel populations upstream of reservoirs may be adversely affected by changes in the fish fauna essential to a mussel's reproductive cycle.

Coal mining-related siltation and associated toxic runoff have adversely impacted many stream reaches. Numerous streams have experienced mussel and fish kills from toxic chemical spills, and poor land-use practices have fouled many waters with silt. Runoff from large urban areas has degraded water and substrate quality. Because of the extent of habitat destruction, the overall aquatic faunal diversity in many of the basins' rivers has declined significantly. As a result of this destruction of riverine habitat, 8 fishes and 24 mussels in the Tennessee and Cumberland river basins have already required the Act's protection, and numerous other aquatic species in these two basins are currently considered species of concern and could warrant listing in the future.

The mussel fauna in the Tennessee and Cumberland rivers has been extensively sampled, and much is known about the historic and present distribution of this rich fauna. Gordon (1991) provided an extensive review of the literature regarding the past and present ranges of the Cumberland elktoe, oyster mussel, Cumberlandian combshell, purple bean, and rough rabbitsfoot. Based on Gordon's (1991) review and personal communications with numerous Federal, State, and independent biologists, it is clear that these five mussel species have undergone significant reductions in range and that they now exist as only remnant isolated populations. (See ''Background'' section for a discussion of current and historic distribution and threats to the remaining populations.)

B. *Overutilization for commercial, recreational, scientific, or educational purposes.* These five mussels are not commercially valuable; but as they are extremely rare, they could be sought by collectors. The specific areas inhabited by these species are presently unknown to the general public. As a result, their overutilization has not been a problem to date. Most stream reaches inhabited by these mussels are extremely small. Thus, populations of the species could be easily eliminated or significantly reduced using readily available toxic chemicals. Although scientific collecting is not presently identified as a threat, take by private and institutional collectors could pose a threat if left unregulated. Federal protection of these species will help to minimize illegal and inappropriate take.

C. *Disease and predation.* Disease occurrence in freshwater mussels is virtually unknown. However, since 1982, biologists and commercial mussel fishermen have reported extensive mussel die-offs in rivers and lakes throughout the United States. The cause(s) of many of these die-offs is unknown, but disease has been suggested as a possible factor.

Shells of all five species are often found in muskrat middens. The species are also presumably consumed by other mammals, such as raccoons and mink. While predation is not thought to be a significant threat to a healthy mussel population, Neves and Odum (1989) suggest it could limit the recovery of endangered mussel species or contribute to the local extirpation of already depleted mussel populations. Predation would be of particular concern to oyster mussel, Cumberlandian combshell, and purple bean, which exist only as extremely small, remnant populations.

D. *The inadequacy of existing regulatory mechanisms.* The States of Kentucky, Alabama, Tennessee, and Virginia prohibit the taking of fish and wildlife, including freshwater mussels, for scientific purposes without a State collecting permit. However, enforcement of this permit requirement is difficult. Also, State regulations do not generally protect these mussels from other threats.

Existing authorities available to protect aquatic systems, such as the CWA, administered by the EPA and the Corps, may not have been fully utilized. This may have contributed to the degradation of aquatic environments and the decline of aquatic species in the Southeast (see response to Issue 25 in the ''Summary of Comments and Recommendations'' of this final rule). As these mussels (Cumberland elktoe, Cumberlandian combshell, oyster mussel, purple bean, and rough rabbitsfoot) coexist with other federally listed species throughout most or all of their range, some of the habitats of these species are indirectly provided some Federal protection from Federal actions and activities through section 7 of the Act. However, Federal listing will provide additional protection for all five species throughout their range by requiring Federal permits to take the species and by requiring Federal agencies to consult with the Service when activities they fund, authorize, or carry out may specifically adversely affect these species.

E. *Other natural or manmade factors affecting its continued existence.* The populations of these species (Cumberland elktoe, oyster mussel, Cumberlandian combshell, purple bean, and rough rabbitsfoot) are small and geographically isolated. This isolation prohibits the natural interchange of genetic material between populations,

and the small population sizes reduce the reservoir of genetic variability within the populations. It is likely that some of the populations of the Cumberland elktoe, oyster mussel, Cumberlandian combshell, purple bean, and rough rabbitsfoot may be below the level required to maintain long-term genetic viability. Also, because most of the extant populations of these mussels are restricted to short river reaches, they are very vulnerable to extirpation from a single catastrophic event, such as a toxic chemical spill or a major stream channel modification. Because the populations of each species are isolated from one another because of impoundments, natural repopulation of any extirpated population is impossible without human intervention.

The invasion of the exotic zebra mussel (*Dreissena polymorpha*) into the Great Lakes poses a potential threat to the Ohio River's mussel fauna. The zebra mussel has recently been reported from the Tennessee and Cumberland rivers, but the extent of its impact on the basin's freshwater mussels is unknown. Zebra mussels in the Great Lakes have been found attached in large numbers to the shells of live and freshly dead native mussels, and zebra mussels have been implicated in the loss of entire mussel beds.

The Service has carefully assessed the best scientific and commercial information available regarding the past, present, and future threats faced by these mussels in determining to make this rule final. Based on these evaluations, the preferred action is to list the Cumberland elktoe (*Alasmidonta atropurpurea*), oyster mussel (*Epioblasma capsaeformis*), Cumberlandian combshell (*Epioblasma brevidens*), purple bean (*Villosa perpurpurea*), and rough rabbitsfoot (*Quadrula cylindrica strigillata*) as endangered species. The Cumberland elktoe, purple bean, and rough rabbitsfoot are known from three populations each, and the Cumberlandian combshell and oyster mussel are known from five populations each. These five species and their habitat have been and continue to be impacted by habitat destruction and range reduction. Their limited distribution also makes them very vulnerable to possible extinction from toxic chemical spills. Because of their restricted distributions and their vulnerability to extinction, endangered status appears to be the most appropriate classification for these species.

Critical Habitat

Section 4(a)(3) of the Act, as amended, requires that, to the maximum extent prudent and determinable, the Secretary designate critical habitat at the time the species is determined to be endangered or threatened. The Service's regulations (50 CFR 424.12(a)(1)) state that designation of critical habitat is not prudent when one or both of the following situations exist: (1) The species is threatened by taking or other activity and the identification of critical habitat can be expected to increase the degree of threat to the species or (2) such designation of critical habitat would not be beneficial to the species. The Service finds that designation of critical habitat is not prudent for these species. Such a determination would result in no known benefit to these species, and designation of critical habitat could pose a further threat to them through publication of their site-specific localities.

Section 7(a)(2) and regulations codified at 50 CFR Part 402 require Federal agencies to ensure, in consultation with and with the assistance of the Service, that activities they authorize, fund, or carry out are not likely to jeopardize the continued existence of listed species or destroy or adversely modify their critical habitat, if designated. Section 7(a)(4) requires Federal agencies to confer informally with the Service on any action that is likely to jeopardize the continued existence of a proposed species or result in the destruction or adverse modification of proposed critical habitat. (See ''Available Conservation Measures'' section for a further discussion of section 7.) As part of the development of this final rule, Federal and state agencies were notified of the mussels' general distributions, and they were requested to provide data on proposed Federal actions that might adversely affect the species. Should any future projects be proposed in areas inhabited by these mussels, the involved Federal agency will already have the general distributional data needed to determine if the species may be impacted by its action; and if needed, more specific distributional information would be provided.

Each of these mussels occupies very restricted stream reaches. Thus, because any significant adverse modification or destruction of these species' habitat would likely jeopardize their continued existence, no additional protection for the species would accrue from critical habitat designation that would not also accrue from listing these species. Therefore, habitat protection for these species would be accomplished through the section 7 jeopardy standard and section 9 prohibitions against take.

In addition, these mussels are rare, and taking for scientific purposes and private collection could pose a threat if specific site information were released. The publication of critical habitat maps in the Federal Register and local newspapers, and other publicity accompanying critical habitat designation could increase the collection threat and increase the potential for vandalism, especially during the often controversial critical habitat designation process. The locations of populations of these species have consequently been described only in general terms in this rule. Any existing precise locality data would be available to appropriate Federal, state, and local governmental agencies from the following offices—the Service office described in the **ADDRESSES** section of these rules; the Service's Cookeville Field Office, 446 Neal Street, Cookeville, Tennessee 38501; the Service's White Marsh Field Office, P.O. Box 480, Mid-County Center, U.S. Route 17, White Marsh, Virginia 23183; the Service's Southeastern Virginia Field Office, P.O. Box 2345, 332 Cummings Street, Abingdon, Virginia 24212; KDFWR; KSNPC; TWRA; TDEC; VDGIF; and VDCR.

Available Conservation Measures

Conservation measures provided to species listed as endangered or threatened under the Act include recognition, recovery actions, requirements for Federal protection, and prohibitions against certain practices. Recognition through listing encourages and results in conservation actions by Federal, state, and private agencies, groups, and individuals. The Act provides for possible land acquisition and cooperation with the states and requires that recovery actions be carried out for all listed species. The protection required of Federal agencies and the prohibitions against taking and harm are discussed, in part, below.

Section 7(a) of the Act requires Federal agencies to evaluate their actions with respect to any species that is proposed or listed as endangered or threatened and with respect to its critical habitat, if any is being designated. Regulations implementing this interagency cooperation provision of the Act are codified at 50 CFR Part 402. Section 7(a)(4) requires Federal agencies to confer informally with the Service on any action that is likely to jeopardize the continued existence of a proposed species or result in destruction or adverse modification of

proposed critical habitat. If a species is listed subsequently, section 7(a)(2) of the Act requires Federal agencies to ensure that activities they authorize, fund, or carry out are not likely to jeopardize the continued existence of such a species or to destroy or adversely modify its critical habitat. If a Federal action may affect a listed species or its critical habitat, the responsible Federal agency must enter into formal consultation with the Service.

The Service notified Federal agencies that may have programs which could affect these species. One major Federal project, a proposed TVA impoundment on the Duck River, Columbia, Tennessee, could have a significant impact on the oyster mussel. Construction of Columbia Dam was suspended in the late 1970's after the Service issued a Biological Opinion stating that the dam's completion would likely jeopardize the continued existence of two federally listed mussels. Although our Biological Opinion included reasonable and prudent alternatives that would have allowed the project to go forward, TVA has not implemented those measures and has been reevaluating the project and considered other alternatives to meet the project objectives. (A third mussel listed prior to the issuance of the Biological Opinion is now known from the proposed flood pool.) Although the presence of a fourth endangered mussel (oyster mussel) may somewhat complicate this issue, any measures needed to avoid a jeopardy situation for the currently listed mussels would not be expected to change significantly with the addition of a fourth listed species (see response to Issue 19 in the ''Summary of Comments and Recommendations'' section of these rules).

A water supply reservoir is under consideration on Crooked Creek in the upper Big South Fork of the Cumberland River watershed, Fentress County, Tennessee. This project would inundate and adversely impact a portion of the Cumberland elktoe population that exists in the upper Big South Fork basin. This water supply project, proposed by the Fentress County Utility District, is one of a series of water supply alternatives currently under review for a permit pursuant to section 404 of the CWA. However, the Service does not believe the listing of the Cumberland elktoe will stop completion of the Crooked Creek Reservoir (see response to Issue 4 in the ''Summary of Comments and Recommendations'' of these rules).

Another water supply reservoir is under consideration by the Catoosa Utility District for Clear Creek, an Obed River tributary, Morgan County, Tennessee. The purple bean occurs in the Obed River system. However, based on available information, this species does not exist at the proposed reservoir site or in the area downstream of the site that would be significantly affected by the project. Therefore, as the Service does not anticipate that the project will have a significant impact on the purple bean, the listing will not have any significant impact on this reservoir project (see response to Issue 1 in the ''Summary of Comments and Recommendations'' of this rule).

Since the close of the comment period on this rule, the Southeastern Virginia Field Office has become involved in an informal section 7 consultation regarding a proposed Federal prison in Lee County, Virginia, and its potential impacts to eight federally listed mussels that live in the Powell River. The Cumberlandian combshell, oyster mussel, and purple bean are also known from the Powell River and will now need to be considered in this consultation. However, since the eight listed mussels are already being considered with regard to this project, the outcome of the consultation should not be affected by the addition of these three more listed mussels. Based on this review, the Service has determined that there is no information that would substantively affect these listing decisions and that additional public comment is not warranted.

No other specific proposed Federal actions were identified that would likely affect any of the species. Federal activities that could occur and impact the species include, but are not limited to, the carrying out or the issuance of permits for reservoir construction, stream alterations, waste water facility development, water withdrawal projects, pesticide registration, mining, and road and bridge construction. However, it has been the experience of the Service that nearly all section 7 consultations have been resolved so that the species have been protected and the project objectives have been met.

The Act and implementing regulations found at 50 CFR 17.21 set forth a series of general prohibitions and exceptions that apply to all endangered wildlife. These prohibitions, in part, make it illegal for any person subject to the jurisdiction of the United States to take (includes harass, harm, pursue, hunt, shoot, wound, kill, trap, or collect; or to attempt any of these), import or export, ship in interstate commerce in the course of commercial activity, or sell or offer for sale in interstate or foreign commerce any listed species. It is also illegal to possess, sell, deliver, carry, transport, or ship any such wildlife that has been taken illegally. Certain exceptions apply to agents of the Service and State conservation agencies.

Permits may be issued to carry out otherwise prohibited activities involving endangered wildlife species under certain circumstances. Regulations governing permits are at 50 CFR 17.22 and 17.23. Such permits are available for scientific purposes, to enhance the propagation or survival of the species, and/or for incidental take in connection with otherwise lawful activities.

It is the policy of the Service published in the Federal Register on July 1, 1994,(59 FR 34272) to identify at the time of listing, to the maximum extent practicable, those activities that would not constitute a violation of section 9 of the Act. The intent of this policy is to increase public awareness as to the effects of these listings on proposed and ongoing activities within a species' range. During the public comment periods, comments were received questioning the effect these listings would have on private landowners (see response to Issue 2 and 12 in the ''Summary of Comments and Recommendations'' section of this rule), pesticide application (see response to Issue 13), use of existing river fords by the farming community (see response to Issue 15), and traditional farming practices (see response to Issue 17). The Service believes, based on the best available information as outlined in the ''Summary of Comments and Recommendations'' section of this rule, that the aforementioned actions will not result in a violation of section 9 provided the activities are carried out in accordance with any existing regulations and permit requirements. In addition, the Service also believes that certain other activities will not result in a section 9 violation. They include use of the river by boaters, anglers, and other existing recreational uses.

Activities that the Service believes could potentially result in ''take'' of these mussels, include, but are not limited to, the unauthorized collection or capture of the species; unauthorized destruction or alteration of the species' habitat (e.g., in-stream dredging, channelization, discharge of fill material); violation of any discharge or water withdrawal permit; and illegal discharge or dumping of toxic chemicals or other pollutants into waters supporting the species.

Other activities not identified in the above two paragraphs will be reviewed on a case-by-case basis to determine if a violation of section 9 of the Act may

be likely to result from such activity. The Service does not consider these lists to be exhaustive and provides them as information to the public.

Questions regarding whether specific activities will constitute a violation of section 9 should be directed to the Field Supervisor of the Service's Asheville Field Office (see **ADDRESSES** section). Requests for copies of the regulations on listed species and inquiries regarding prohibitions and permits should be addressed to the U.S. Fish and Wildlife Service, Ecological Services (TE), 1875 Century Boulevard, Atlanta, Georgia 30345–3301 (404/679–7096).

National Environmental Policy Act

The Service has determined that an Environmental Assessment, as defined under the authority of the National Environmental Policy Act of 1969, need not be prepared in connection with regulations adopted pursuant to section 4(a) of the Act. A notice outlining the Service's reasons for this determination was published in the Federal Register on October 25, 1983 (48 FR 49244).

Required Determinations

The Service has examined this regulation under the Paperwork Reduction Act of 1995 and found it to contain no information collection requirements. This rulemaking was not subject to review by the Office of Management and Budget under Executive Order 12866.

References Cited

Bakaletz, S. 1991. Mussel survey of the Big South Fork National River Recreation Area. M.S. Thesis. Tennessee Technological University, Cookeville, Tennessee. 62 pp.

Bogan, A. E., and P. W. Parmalee. 1983. Tennessee's rare wildlife, Volume II: the mollusks. 123 pp.

Clarke, A. H. 1981. The Tribe Alasmidontini (Unionidae: Anodontinae), Part I: *Pegias, Alasmidonta,* and *Arcidens.* Smithsonian Contributions to Zoology, No. 326. 101 pp.

Gordon, M. E. 1991. Species accounts for Cumberland elktoe (*Alasmidonta atropurpurea*), Cumberlandian combshell (*Epioblasma brevidens*), oyster mussel (*Epioblasma capsaeformis*), rough rabbitsfoot (*Quadrula cylindrica strigillata*), and purple bean (*Villosa perpurpurea*). Unpublished reports to The Nature Conservancy. 75 pp.

Johnson, R. I. 1978. Systematics and zoogeography of *Plagiola* (=*Dysnomia*=*Epioblasma*), an almost extinct genus of mussels (Bivalvia: Unionides) from middle North America. Bull. Mus. Comp. Zool. 148:239–320.

Kentucky State Nature Preserves Commission. 1991. Endangered, Threatened, and Special Concern Plant and Animal Species of Kentucky. March 1991. 15 pp.

Neves, R. J. 1991. Mollusks. *In* Virginia's endangered species, proceedings of a symposium. Coordinated by Karen Terwilliger. McDonald & Woodward Publ. Co., Blacksburg, Virginia. 672 pp.

Neves, R. J., and M. C. Odum. 1989. Muskrat predation on endangered freshwater mussels in Virginia. Jour. Wildl. Manage. 53(4):939–940.

Ortmann, A. E. 1918. The nayades (freshwater mussels) of the upper Tennessee drainage with notes on synonymy and distribution. Proceedings of the American Philosophical Society. 57:521–626.

Tennessee Valley Authority. 1971. Stream length in the Tennessee River Basin. Tennessee River Authority, Knoxville, Tennessee, 25 pp.

Author

The primary author of this final rule is Richard G. Biggins, U.S. Fish and Wildlife Service, Asheville Field Office, 160 Zillicoa Street, Asheville, North Carolina 28801 (704/258–3939, Ext. 228).

List of Subjects in 50 CFR Part 17

Endangered and threatened species, Exports, Imports, Reporting and recordkeeping requirements, and Transportation.

Regulation Promulgation

Accordingly, part 17, subchapter B of chapter I, title 50 of the Code of Federal Regulations, is amended as set forth below:

PART 17—[AMENDED]

1. The authority citation for part 17 continues to read as follows:

Authority: 16 U.S.C. 1361–1407; 16 U.S.C. 1531–1544; 16 U.S.C. 4201–4245; Pub. L. 99–625, 100 Stat. 3500, unless otherwise noted.

2. Section 17.11(h) is amended by adding the following, in alphabetical order under ''CLAMS,'' to the List of Endangered and Threatened Wildlife to read as follows:

§17.11 Endangered and threatened wildlife.

* * * * *

(h) * * *

SPECIES		Historic range	Vertebrate population where endangered or threatened	Status	When listed	Critical habitat	Special rules
Common name	Scientific name						
*	*	*	*	*	*	*	
CLAMS:							
*	*	*	*	*	*	*	
Bean, purple	*Villosa perpurpurea*	U.S.A. (TN and VA)	NA	E	602	NA	NA
*	*	*	*	*	*	*	
Combshell, Cumberland.	*Epioblasma brevidens*	U.S.A. (AL, KY, TN, and VA).	NA	E	602	NA	NA
*	*	*	*	*	*	*	
Elktoe, Cumberland	*Alasmidonta atropurpurea*	U.S.A. (KY and TN)	NA	E	602	NA	NA
*	*	*	*	*	*	*	
Mussel, oyster	*Epioblasma capsaeformis*	U.S.A. (AL, KY, TN, and VA).	NA	E	602	NA	NA

SPECIES		Historic range	Vertebrate population where endangered or threatened	Status	When listed	Critical habitat	Special rules
Common name	Scientific name						
*	*	*	*	*	*	*	
Rabbitsfoot, rough	*Quadrula cylindrica strigillata.*	U.S.A. (TN and VA)	NA	E	602	NA	NA
*	*	*	*	*	*	*	

Dated: December 6, 1996.

John G. Rogers,

Acting Director, Fish and Wildlife Service.

[FR Doc. 97–565 Filed 1–9–97; 8:45 am]

BILLING CODE 4310–55–P

Reader Aids

Federal Register

Vol. 62, No. 7

Friday, January 10, 1997

CUSTOMER SERVICE AND INFORMATION

Federal Register/Code of Federal Regulations

General Information, indexes and other finding aids **202–523–5227**

Laws

For additional information **523–5227**

Presidential Documents

Executive orders and proclamations **523–5227**

The United States Government Manual **523–5227**

Other Services

Electronic and on-line services (voice) **523–4534**

Privacy Act Compilation **523–3187**

TDD for the hearing impaired **523–5229**

ELECTRONIC BULLETIN BOARD

Free Electronic Bulletin Board service for Public Law numbers, Federal Register finding aids, and list of documents on public inspection. **202–275–0920**

FAX-ON-DEMAND

You may access our Fax-On-Demand service. You only need a fax machine and there is no charge for the service except for long distance telephone charges the user may incur. The list of documents on public inspection and the daily Federal Register's table of contents are available using this service. The document numbers are 7050-Public Inspection list and 7051-Table of Contents list. The public inspection list will be updated immediately for documents filed on an emergency basis.

NOTE: YOU WILL ONLY GET A LISTING OF DOCUMENTS ON FILE AND NOT THE ACTUAL DOCUMENT. Documents on public inspection may be viewed and copied in our office located at 800 North Capitol Street, N.W., Suite 700. The Fax-On-Demand telephone number is: **301–713–6905**

FEDERAL REGISTER PAGES AND DATES, JANUARY

1–300 2
301–592 3
593–888 6
889–1030 7
1031–1238 8
1239–1382 9
1383–1658 10

CFR PARTS AFFECTED DURING JANUARY

At the end of each month, the Office of the Federal Register publishes separately a List of CFR Sections Affected (LSA), which lists parts and sections affected by documents published since the revision date of each title.

3 CFR

Presidential Determinations:

No. 97–11A of December 6, 1996 299

No. 97–14 of December 27, 1996 1379

No. 97–15 of December 27, 1996 1381

Executive Orders:

12543 (Continued by Notice of Jan. 2, 1997) 587

12544 (Continued by Notice of Jan. 2, 1997) 587

5 CFR

2640 1361

7 CFR

2 1031
33 1032
210 889
226 889
300 593
319 593
929 915
932 1239
944 1239
959 916
982 1035
985 1246
997 1249
998 1249
999 1249
1011 918
1049 918
1079 918
1124 1

Proposed Rules:

401 333
443 48
445 338
457 .....48, 333
906 55
985 942

8 CFR

Proposed Rules:

1 444
3 444
103 444
204 444
207 444
208 444
209 444
211 444
212 444
213 444
214 444
216 444
217 444
221 444
223 444
232 444
233 444
234 444
235 444
236 444
237 444
238 444
239 444
240 444
241 444
242 444
243 444
244 444
245 444
246 444
248 444
249 444
251 444
252 444
253 444
274a 444
286 444
287 444
299 444
316 444
318 444
329 444

9 CFR

160 597
161 597

Proposed Rules:

78 1406

12 CFR

932 4

Proposed Rules:

202 56
213 62

13 CFR

120 301

14 CFR

39 ...10, 15, 302, 304, 307, 600, 602, 604, 1038, 1039, 1041, 1044, 1275, 1277, 1278, 1383
71 .....309, 607, 608, 609, 1046, 1047, 1048
382 16
91 1192
97 .....1049, 10450, 1050
119 1192
121 1192
135 1192

Proposed Rules:

39 .....343, 945, 947, 949, 951, 1061, 1298, 1299

71 .....70, 347, 348, 1063, 1064, 1065, 1066, 1067, 1068, 1069, 1070, 1071, 1072, 1073
107 1024
108 1024

17 CFR

200 .....520, 1384
228 520
229 520
230 520
240 .....520, 1279, 1385
242 520
Proposed Rules:
Ch. II 1301

18 CFR

33 1281
34 1281
35 1281
36 1281
37 610
292 1281
300 1281
1314 920
Proposed Rules:
284 1073

20 CFR

416 .....309, 1053
Proposed Rules:
404 .....349, 352
416 352

21 CFR

5 923
529 611
579 611
Proposed Rules:
589 552
812 953
1301 1024
1304 1024

22 CFR

42 613
228 314

23 CFR

655 1364
Proposed Rules:
655 691

25 CFR

151 1057

26 CFR

1 .....17, 361, 615, 923
31 22
53 25
602 .....22, 923
Proposed Rules:
1 .....71, 72, 77, 81, 694, 955
53 84
301 .....77, 955
602 81

27 CFR

55 1386

28 CFR

9 314

29 CFR

102 1361
1910 1494
1915 1494
1926 1494

30 CFR

Proposed Rules:
902 1074
926 1408

31 CFR

354 621
356 846
357 26

32 CFR

199 625
220 941
813 631
818 631
844 631

33 CFR

157 1622

38 CFR

Proposed Rules:
21 .....1075, 1303

39 CFR

60 .....631, 638
111 645

40 CFR

52 .....646, 648, 1150, 1187
70 1387
180 (2 documents) 1284, 1288
Proposed Rules:
51 210
52 .....695, 1420
60 960
63 960
89 200
260 960
261 960
264 960
265 960
266 960
270 960
271 960
372 .....365, 366
721 1305

41 CFR

101–20 1057
101–38 322

42 CFR

413 26

45 CFR

1311 1399

46 CFR

572 328

47 CFR

24 653
51 662
73 664
73 329
Proposed Rules:
22 696
26 696
61 1423
73 .....84, 372, 373,

48 CFR

Ch. 1 .....224, 275
1 .....226, 233, 271
2 256
3 .....226, 233
4 .....226, 233, 257
5 .....261, 262, 271
6 .....233, 256, 262
8 233
9 .....226, 233, 266
11 262
12 .....226, 233, 257, 262
13 262
14 .....226, 233, 261, 271
15 .....226, 256, 257, 261
16 .....233, 257
17 261
19 .....226, 233
23 233
24 256
25 .....257, 261, 267, 268
27 .....233, 261
29 233
31 .....233, 257, 269
32 233
33 .....226, 270
36 .....233, 271
37 .....226, 233
39 273
42 .....233, 274
43 226
45 233
46 257
47 233
49 233
52 .....226, 233, 257, 261, 273
53 .....226, 233
216 1058
239 1058
Proposed Rules:
225 374
231 374
242 374

49 CFR

27 16
171 (2 documents) 1208, 1217
172 1217
173 (3 docuement) 1208, 17
174 1217
175 1217
176 1217
177 1217
180 1208
232 278
382 1293
383 1293
390 1293
571 .....798, 1401
Proposed Rules:
538 375
571 .....807, 1077
595 831

50 CFR

17 .....665, 1644, 1647
227 1296
229 33
259 330
285 331
622 .....689, 1402
648 1403
649 1403
Proposed Rules:
300 382
600 .....700, 1306
622 .....384, 720
648 1424
660 700
678 724
679 .....85, 724

REMINDERS

The items in this list were editorially compiled as an aid to Federal Register users. Inclusion or exclusion from this list has no legal significance.

RULES GOING INTO EFFECT TODAY

AGRICULTURE DEPARTMENT

Farm Service Agency

Program regulations:

Construction and other development; planning and performance; published 12-11-96

AGRICULTURE DEPARTMENT

Rural Business-Cooperative Service

Program regulations:

Construction and other development; planning and performance; published 12-11-96

AGRICULTURE DEPARTMENT

Rural Housing Service

Program regulations:

Construction and other development; planning and performance; published 12-11-96

AGRICULTURE DEPARTMENT

Rural Utilities Service

Program regulations:

Construction and other developments; planning and performance; published 12-11-96

NATIONAL LABOR RELATIONS BOARD

Privacy Act; implementation; published 12-11-96

Summary judgment cases notice-to-show cause procedure, advisory opinions, etc.; Federal regulatory review; published 12-11-96

NUCLEAR REGULATORY COMMISSION

Reactor site criteria:

Seismic and earthquake engineering criteria for nuclear power plants; published 12-11-96

SECURITIES AND EXCHANGE COMMISSION

Securities:

Customer limit orders; improvement of handling and execution; published 9-12-96

COMMENTS DUE NEXT WEEK

AGRICULTURE DEPARTMENT

Animal and Plant Health Inspection Service

Interstate transportation of animals and animal products (quarantine):

Brucellosis in cattle and bison—

State and area classifications; comments due by 1-17-97; published 11-18-96

AGRICULTURE DEPARTMENT

Meat and meat products; export reporting; comments due by 1-13-97; published 11-14-96

COMMERCE DEPARTMENT

Export Administration Bureau

Export administration regulations:

Key escrow encryption equipment and software; licensing; comments due by 1-13-97; published 12-13-96

COMMERCE DEPARTMENT

National Oceanic and Atmospheric Administration

Fishery conservation and management:

Alaska; fisheries of Exclusive Economic Zone—

Pacific halibut and red king crab; comments due by 1-15-97; published 12-16-96

Northeastern United States fisheries—

Atlantic mackerel, squid, and butterfish; comments due by 1-14-97; published 11-15-96

Summer flounder and scup; comments due by 1-13-97; published 12-18-96

COMMODITY FUTURES TRADING COMMISSION

Contract markets:

Contract market designation applications review and approval and exchange rules relating to contract terms and conditions; comments due by 1-16-97; published 12-27-96

Contract market rule review procedures; comments due by 1-16-97; published 12-17-96

DEFENSE DEPARTMENT

Acquisition regulations:

Restructuring costs/bonuses; comments due by 1-14-97; published 11-15-96

Federal Acquisition Regulation (FAR):

Independent research and development allowable cost criteria/bid and proposal costs for Fiscal Year 1996 and beyond; comments due by 1-13-97; published 11-14-96

ENVIRONMENTAL PROTECTION AGENCY

Air pollutants, hazardous; national emission standards:

Secondary lead smelters, new and existing; comments due by 1-13-97; published 12-12-96

Air programs:

Outer Continental Shelf regulations--

California; comments due by 1-15-97; published 12-16-96

Air quality implementation plans; approval and promulgation; various States:

Florida; comments due by 1-15-97; published 12-16-96

Georgia; comments due by 1-13-97; published 12-13-96

Idaho; comments due by 1-17-97; published 12-18-96

Texas; comments due by 1-13-97; published 12-13-96

Pesticides; tolerances in food, animal feeds, and raw agricultural commodities:

Propiconazole; comments due by 1-13-97; published 11-13-96

Water pollution control:

Great Lakes System; water quality guidance--

Selenium criterion maximum concentration; comments due by 1-15-97; published 12-16-96

FEDERAL COMMUNICATIONS COMMISSION

Radio services, special:

Aviation services--

112-118 MHz for Differential Global Positioning System (GPS) correction data and hand-held transmitter use; comments due by 1-15-97; published 11-29-96

Radio stations; table of assignments:

Pennsylvania; comments due by 1-13-97; published 12-4-96

Texas; comments due by 1-13-97; published 12-2-96

FEDERAL MARITIME COMMISSION

Maritime carriers in foreign commerce:

Conditions unfavorable to shipping, actions to adjust or meet--

United States/Japan trade; port restrictions and requirements; comments due by 1-13-97; published 11-13-96

FEDERAL RETIREMENT THRIFT INVESTMENT BOARD

Thrift savings plan:

Basic pay definition and Thrift Savings Plan loan program amendments; comments due by 1-17-97; published 11-18-96

GENERAL SERVICES ADMINISTRATION

Federal Acquisition Regulation (FAR):

Independent research and development allowable cost criteria/bid and proposal costs for Fiscal Year 1996 and beyond; comments due by 1-13-97; published 11-14-96

HEALTH AND HUMAN SERVICES DEPARTMENT

Food and Drug Administration

Food additives:

Adjuvants, production aids, and sanitizers--

Sodim 2,2 '-methylenebis(4,6-di-tert-butylphenyl)phosphate; comments due by 1-15-97; published 12-16-96

Adjuvants, production aids, and sanitizers--

2-[[2,4,8,10-tetrakis(1,1-dimethylethyl)dibenzo-[d,f][1,3,2], etc.; comments due by 1-15-97; published 12-16-96

Food for human consumption:

Food additives--

Curdlan; comments due by 1-15-97; published 12-16-96

Human drugs and biological products:

Postmarketing expedited adverse experience reporting requirements; increased frequency reports revocation; comments due by 1-13-97; published 10-28-96

Human drugs:

Colloidal silver ingredients or silver salts, products

containing (OTC); not generally recognized as safe and effective; comments due by 1-13-97; published 10-15-96

INTERIOR DEPARTMENT

Land Management Bureau

Appeals and hearings procedures; revisions; comments due by 1-17-97; published 11-13-96

Disposition; grants:

Alaska; State grants; comments due by 1-14-97; published 11-15-96

Forest management:

Sustained-yield forest units; comments due by 1-14-97; published 11-15-96

LIBRARY OF CONGRESS

Copyright Office, Library of Congress

Copyright office and procedures:

Registration of claims--

≥Best Edition≥ of published copyrighted works; comments due by 1-14-97; published 12-3-96

NATIONAL AERONAUTICS AND SPACE ADMINISTRATION

Federal Acquisition Regulation (FAR):

Independent research and development allowable cost criteria/bid and proposal costs for Fiscal Year 1996 and beyond; comments due by 1-13-97; published 11-14-96

PERSONNEL MANAGEMENT OFFICE

Retirement, health benefits, and life insurance, Federal employees:

Distirct of Columbia Financial Control Authority; employee coverage as Federal employees; comments due by 1-14-97; published 11-15-96

SECURITIES AND EXCHANGE COMMISSION

Electronic Data Gathering, Analysis, and Retrieval System (EDGAR):

Submission of filings and other documents; amendments; comments due by 1-13-97; published 12-12-96

TRANSPORTATION DEPARTMENT

Federal Aviation Administration

Airworthiness directives:

AlliedSignal Inc.; comments due by 1-13-97; published 11-13-96

Bell; comments due by 1-13-97; published 11-14-96

Boeing; comments due by 1-13-97; published 11-12-96

Dornier; comments due by 1-17-97; published 12-5-96

Rolls-Royce plc; comments due by 1-13-97; published 11-13-96

Schempp-Hirth; comments due by 1-17-97; published 11-5-96

Special conditions--

Gulfstream model G1159A airplane; comments due by 1-13-97; published 12-13-96

Class E airspace; comments due by 1-13-97; published 11-19-96

TRANSPORTATION DEPARTMENT

National Highway Traffic Safety Administration

Motor vehicle safety standards:

Occupant crash protection--

Smart air bags, vehicles without; warning labels, manual cutoff switches, etc. reduction of dangerous impacts on children; comments due by 1-13-97; published 11-27-96

TREASURY DEPARTMENT

Alcohol, Tobacco and Firearms Bureau

Firearms:

Commerce in explosives; comments due by 1-13-97; published 10-15-96

TREASURY DEPARTMENT

Fiscal Service

Treasury tax and loan depositaries and payment of Federal taxes:

Electronic Federal Tax Payment System operation; financial institutions and Federal Reserve Banks; comments due by 1-13-97; published 11-21-96