ENVIRONMENTAL PROTECTION AGENCY

40 CFR Part 63

[AD–FRL–5672–5]

RIN 2060–AC19

National Emission Standards for Hazardous Air Pollutants for Source Categories: Organic Hazardous Air Pollutants From the Synthetic Organic Chemical Manufacturing Industry and Other Processes Subject to the Negotiated Regulation for Equipment Leaks; Rule Clarifications

AGENCY: Environmental Protection Agency (EPA).

ACTION: Final rule: Amendments.

SUMMARY: On April 22, 1994 and June 6, 1994, the EPA issued the National Emission Standards for Hazardous Air Pollutants for Source Categories: Organic Hazardous Air Pollutants from the Synthetic Organic Chemical Manufacturing Industry and Other Processes Subject to the Negotiated Regulation for Equipment Leaks. This rule is commonly known as the Hazardous Organic NESHAP or the HON. In June 1994, petitions for review of the April 1994 rule were filed in the U.S. Court of Appeals for the District of Columbia Circuit. The petitioners raised over 75 technical issues and concerns with drafting clarity of the rule.

On August 26, 1996, the EPA proposed correcting amendments to the rule to address the petitioners' issues. Among the proposed amendments were proposed revisions to definitions that apply to wastewater and wastewater treatment and revised control and compliance provisions for wastewater. A new compliance date of April 22, 1999, was proposed for process wastewater, heat exchange systems, equipment subject to the provisions of §63.149, and maintenance wastewater. The EPA also proposed a separate compliance date for wastewater streams affected by the omission of nitrobenzene from the list of compounds subject to the wastewater provisions. The proposed revisions to the other provisions to the rule also included corrections and clarifications to ensure the rule is implemented as intended. The proposed amendments also included some additional compliance options that would reduce the burden associated with the recordkeeping and reporting requirements of the rule. Today's action takes final action on those proposed amendments.

These amendments to the rule will not change the basic control requirements of the rule or the level of health protection it provides. The rule requires new and existing major sources to control emissions of hazardous air pollutants to the level reflecting application of the maximum achievable control technology.

EFFECTIVE DATE: January 17, 1997.

FOR FURTHER INFORMATION CONTACT: For general questions, contact Dr. Janet S. Meyer, Coatings and Consumer Products Group, at (919) 541–5254 or Mary Tom Kissell, Waste and Chemical Processes Group, at (919) 541–4516. For technical questions on wastewater provisions, contact Elaine Manning, Waste and Chemical Processes Group, telephone number (919) 541–5499. The mailing address for the contacts is Emission Standards Division (MD–13), U.S. Environmental Protection Agency, Research Triangle Park, North Carolina 27711.

SUPPLEMENTARY INFORMATION:

I. Regulated Entities and Background Information

A. Regulated Entities

The regulated category and entities affected by this action include:

Category	Examples of regulated entities
Industry	Synthetic organic chemical manufacturing industry (SOCMI) units, e.g., producers of benzene, toluene, or any other chemical listed in Table 1 of 40 CFR part 63, subpart F.

This table is not intended to be exhaustive but, rather, provides a guide for readers regarding entities likely to be interested in the revisions to the regulation affected by this action. Entities potentially regulated by the HON are those which produce as primary intended products any of the chemicals listed in table 1 of 40 CFR part 63, subpart F and are located at facilities that are major sources as defined in section 112 of the Clean Air Act (CAA). To determine whether your facility is regulated by this action, you should carefully examine all of the applicability criteria in 40 CFR 63.100. If you have questions regarding the applicability of this action to a particular entity, consult one of the individuals listed in the preceding **FOR FURTHER INFORMATION CONTACT** section.

B. Background on Rule

On April 22, 1994 (59 FR 19402), and June 6, 1994 (59 FR 29196), the EPA published in the Federal Register the NESHAP for the synthetic organic chemical manufacturing industry (SOCMI), and for several other processes subject to the equipment leaks portion of the rule. These regulations were promulgated as subparts F, G, H, and I in 40 CFR part 63, and are commonly referred to as the hazardous organic NESHAP, or the HON. Since the April 22, 1994 notice, there have been several amendments to clarify various aspects of the rule. Readers should see the following Federal Register notices for more information: September 20, 1994 (59 FR 48175); October 24, 1994 (59 FR 53359); October 28, 1994 (59 FR 54131); January 27, 1995 (60 FR 5321); April 10, 1995 (60 FR 18020); April 10, 1995 (60 FR 18026); December 12, 1995 (60 FR 63624); February 29, 1996 (61 FR 7716); June 20, 1996 (61 FR 31435); August 26, 1996 (61 FR 43698); and December 5, 1996 (61 FR 64571).

In June 1994, the Chemical Manufacturers Association (CMA) and Dow Chemical Company filed petitions for review of the promulgated rule in the U.S. Court of Appeals for the District of Columbia Circuit, *Chemical Manufacturers Association* v. *EPA,* 94–1463 and 94–1464 (D.C. Cir.) and *Dow Chemical Company* v. *EPA,* 94–1465 (D.C. Cir). The petitioners raised over 75 technical issues on the rule's structure and applicability. Issues were raised regarding details of the technical requirements, drafting clarity, and structural errors in the drafting of certain sections of the rule. On August 26, 1996, the EPA proposed clarifying and correcting amendments to subparts F, G, H, and I of part 63 to address the issues raised by CMA and Dow on the April 1994 rule.

In the August 26, 1996 document, the EPA committed to taking final action on some portions of the proposed amendments to the rule as soon as possible after the close of the comment period in order to give sources as much lead time as possible. In the December 5, 1996 Federal Register, the EPA took final action on those portions of the proposed amendments that would eliminate the need for filing some implementation plans that would otherwise be due December 31, 1996, and would allow the filing of requests for compliance extensions up to 4 months before the April 1997 compliance date.

Today the EPA is taking final action on the remaining portions of the amendments proposed on August 26, 1996.

C. Public Comment on the August 26, 1996 Proposal

Eighteen comment letters were received on the August 26, 1996 Federal Register document that proposed

changes to the rule. All comment letters received were from industry representatives and trade associations. Most of the comment letters were supportive of the proposed amendments. A few of these comment letters also included suggested editorial revisions to further clarify some aspects of the proposed amendments or to address oversights in the proposed amendments. The EPA considered these suggestions and, where appropriate, made changes to the proposed amendments. The significant issues raised and the changes to the proposed amendments are summarized in this preamble. A memorandum containing the EPA's response to all comments can be found in Docket A–90–19, item number IX–C–1. The response to comments may also be obtained over the Internet at http://ttnwww.rtpnc.epa.gov or from the EPA's Technology Transfer Network (TTN). The TTN is a network of electronic bulletin boards developed and operated by the Office of Air Quality Planning and Standards. The service is free, except for the cost of a phone call. Dial (919) 541–5742 for up to a 14,400 bits per second modem. Select TTN Bulletin Board: Clean Air Act Amendments and select menu item Recently Signed Rules. If more information on TTN is needed, contact the systems operator at (919) 541–5384.

D. Judicial Review

Under Section 307(b)(1) of the CAA, judicial review of this final action is available only on the filing of a petition for review in the U.S. Court of Appeals for the District of Columbia Circuit within 60 days of today's publication of this final rule. Under Section 307(b)(2) of the CAA, the requirements that are subject to today's notice may not be challenged later in civil or criminal proceedings brought by the EPA to enforce these requirements.

II. Overview of Amendments to Rule

With today's action, the EPA is issuing clarifying and correcting amendments to subparts F, G, H, and I of 40 CFR part 63 that were proposed on August 26, 1996. Readers should refer to the August 26, 1996 Federal Register document for a complete discussion of the background and the proposed changes to the rule. Today's revisions are intended to remove any ambiguity and clearly convey the EPA's intent, to make the rule easier to read and implement, and to increase flexibility for the source.

These amendments include an extension of the existing source compliance date to April 22, 1999 for process wastewater, heat exchange systems, maintenance wastewater, and equipment subject to the provisions of §63.149 and also establish a separate compliance date for wastewater streams affected by the omission of nitrobenzene from table 9 of subpart G. A three year compliance date is being established for process wastewater streams that are subject to control requirements due to the presence of nitrobenzene due to an error in the April 22, 1994 rule. Equipment subject to the other provisions of the rule must be in compliance by April 22, 1997, unless a compliance extension is granted.

Today's amendments also include the revisions to the wastewater sections of subpart G, §§63.132 through 63.147. As discussed in the August 26, 1996 document, the wastewater sections have been redrafted to improve organizational structure and clarity. The revised wastewater sections reflect the concept that only when water is ''discarded'' from a process is it ''wastewater,'' and thus subject to the HON wastewater provisions. The revised wastewater sections in subpart G also include provisions that: (1) Ensure that streams traveling from one piece of process equipment to another are handled appropriately to avoid emissions to the environment, and (2) ensure that the changes in the wastewater definition do not permit sources to dilute their streams prior to the point the streams are considered wastewater, thus avoiding control requirements. The amendments to the wastewater provisions also include the provisions that would allow a HON source owner or operator to ship waste off-site for treatment. Under these revisions to the rule, the owner or operator choosing not to treat wastewater on-site may only ship to a facility that has certified that it will treat the waste to the standard required by the HON.

In contrast to the significant revisions of the wastewater provisions, only minor changes are being made to other sections of the rule. In addition to removing ambiguity and increasing flexibility for the source, some revisions reduce the reporting and recordkeeping burden for sources. The reporting and recordkeeping revisions include changes that (1) reduce the number of copies of reports that must be submitted to the EPA and the States, and (2) provide for alternative, less frequent recordkeeping of monitoring data where sources are able to demonstrate that no violations have occurred for prolonged stretches of time.

III. Summary of Major Comments and Changes to the Proposed Amendments to the Rule

A. Applicability of Rule to Storage Vessels Located in a Tank Farm or Marine Terminal

In the August 26, 1996 document, the EPA proposed amendments to clarify the applicability of the rule to storage vessels located in tank farms and marine tank farms. Due to an oversight, the provisions currently in § 63.100(g) of subpart F of the April 1994 rule did not include instructions regarding allocation of tanks in remote locations, such as tank farms. The proposed amendments, § 63.100(g)(3), provided explicit procedures to be followed to assign the storage vessels to a process and then to determine the applicability of the rule.

Most commenters were supportive of the proposed amendment. However, one commenter requested clarification of the difference between a remote storage tank owned by a chemical process facility and a remote storage tank owned by a for-hire, bulk liquid terminal. The commenter thought the proposed amendments to § 63.100(g) could inappropriately cause a remote storage tank owned by a for-hire, bulk liquid terminal to be considered subject to the HON. The commenter requested that the rule specifically state that remote storage vessels at independent tank farm distribution facilities are not subject to the rule.

The EPA agrees with the commenter that the focus of this rule is on chemical manufacturing plants and not on for-hire terminals that store products for distribution. The EPA believes that the commenter's concern arose because the preamble description of this proposed change was not sufficiently clear that this assignment procedure was for allocation of storage vessels at remote locations within the plant site. The EPA believes that when the provisions of § 63.100(g)(3) are considered within context of all the applicability criteria in subpart F it is clear that this proposed assignment procedure for storage vessels in tank farms does not extend the applicability to for-hire terminals that are not part of the major source. For the amendments to affect any specific storage vessel (or transfer rack or distillation unit), it would have to be part of a chemical manufacturing process unit at a major source subject to the rule. In order for a storage vessel (or transfer rack or distillation unit) to be part of a major source, it would have to be (among other things) under the control of the owner or operator of the chemical manufacturing process unit

and located within the same contiguous area as the chemical manufacturing process unit. A storage vessel owned by a for-hire bulk liquid terminal could only be subject to the HON if it was under the control of the owner or operator of the HON chemical manufacturing process unit, and contiguously located, and therefore part of the same major source. The EPA believes that the applicability of the rule is clear and it is not necessary to add explicit language to the rule to specify that storage vessels at for-hire terminals that are not part of the major source are not subject to the rule.

B. Revision to Table 2 of Subpart F List of Regulated Organic Hazardous Air Pollutants

In the August proposal, the EPA proposed to revise table 2 of subpart F to list 21 specific compounds that are to be regulated as polycyclic organic matter (POM) in the HON. The specific compounds listed were identified as being consistent with the historical working definition of POM, which emphasizes emissions from incomplete combustion and pyrolysis processes (49 FR 31680). This change was proposed to address requests for clarification of the scope of the term POM in the HON.

Several commenters contended that 1,2-naphthylamine sulfonic acid, 1,4-naphthylamine sulfonic acid, α-naphthol, and β-naphthol should not have been included on the list of specific compounds proposed to be added to table 2 to replace the hazardous air pollutants category POM. These commenters all asserted that these compounds do not meet the historical working definition of POM, as claimed by the EPA in the August 26, 1996 document. In support of that view, the commenters stated that, in 1992, the EPA acknowledged the potential problems with the statutory definition of POM and stated that, although the definition would remain, the EPA would emphasize emissions from combustion and pyrolysis activities (letter from John Seitz to Larry Thomas, The Society of the Plastics Industry, March 3, 1992). The commenters also believe that, in 1994, the EPA announced a new POM definition in a response to comments Background Information Document (EPA–453/R–94–003d) for the HON that states:

> Polycyclic organic matter is generally formed or emitted during thermal processes including (1) incomplete combustion, (2) pyrolysis, (3) the volatilization of fossil fuels or bitumens, or (4) the distillation or thermal processing of non-fossil fuels. (HON BID, Vol. 2D, p.4)

The commenters believe that these four compounds do not meet what they describe as the revised definitions of POM since the compounds are not produced by combustion processes and are not used in the types of processes intended to be covered by this listing. The commenters recommended that these specific compounds not be added to table 2 of subpart F. One commenter also argued that the EPA should follow the listing process in section 112(b) of the CAA if the EPA wished to list these specific compounds as hazardous air pollutants.

The EPA does not agree with the commenters that these four compounds do not meet the historical working definition of POM and thus, should not be added to table 2 of subpart F. The term POM, as defined in section 112(b) of the CAA, includes organic compounds with more than one benzene ring and which have a boiling point greater than or equal to 100° C. This definition is very broad and does not limit the term to the group of compounds which the EPA believes are principally responsible for mutagenicity and carcinogenicity in humans and animals. This arises because the current statutory definition includes any compound with more than one benzene ring and is not limited to fused ring compounds. Neither the March 1992 Seitz letter, nor the HON Background Information Document amend the statutory definition of POM. The August 26, 1996 proposal, to list 21 specific compounds on table 2 of subpart F instead of listing POM generally, is consistent with the molecular structures of concern in the historical definition. Specifically, the 21 compounds have molecular structures with two or more fused rings at least one of which is benzenoid in structure. These chemicals were identified as chemical products produced by the chemical manufacturing processes considered to be within the definition of the SOCMI source category. Whether these compounds were produced by extraction from materials produced by pyrolysis processes or derived from petroleum feedstocks, was not a consideration in the listing. The EPA does not agree with the commenter's interpretation that compounds can be considered POM only if formed by incomplete combustion and/or pyrolysis operations; the statutory definition of POM is not limited in that fashion.

The reason for including these specific compounds on table 2 instead of listing POM generally was to ensure that emissions of these compounds from the chemical manufacturing process unit producing these chemicals would be subject to the requirements of the rule. All of these compounds meet the definition of POM in section 112(b) of the CAA. Specification of these compounds on table 2 will not result in application of the rule to sources using these chemical products to produce other products. It will require that emissions of these substances from sources subject to this rule to be subject to the requirements of the rule. Before today's changes to table 2 of subpart F, emissions of the 21 substances were subject to the requirements of the rule. Today's changes merely clarify what the substances are rather than referring to POM generally.

Finally, the EPA disagrees with the commenter who argued that the EPA should follow the listing process in section 112(b) to list these compounds as hazardous air pollutants. The specific hazardous air pollutants added to table 2 meet the definition of POM in section 112(b) and therefore are already subject to the requirements of section 112 without further listing action.

One commenter also asserted that listing 1,2-naphthylamine sulfonic acid and 1,4-naphthylamine sulfonic acid as Hazardous Air Pollutants has potential consequences under other statutes. The commenter noted that the Comprehensive Environmental Response, Compensation, and Liability Act (CERCLA) section 101(14)(e) incorporates by reference any hazardous air pollutant listed under the CAA. This, in turn, establishes Federal authority to respond to releases or threats of releases of hazardous substances and triggers notification requirements of releases to the National Response Center above the Reportable Quantity (RQ) and liability for costs associated with cleanup and any natural resources damages resulting from the release. Another possible result is under section 304 of the Emergency Planning and Community Right-to-Know Act of 1986 (EPCRA) that the owner or operator of a facility from which an RQ or more of a CERCLA hazardous substance has been released must immediately notify state and local emergency response authorities.

The EPA does not agree with the commenter's assessment of the potential consequences of the proposed listing of the 21 compounds in table 2 of 40 CFR part 63, subpart F. The commenter's opinion that the listing of the chemicals of interest in table 2 in place of POM generally triggers new CERCLA and EPCRA reporting requirements is incorrect, as the requirements were effective upon enactment of the CAA by virtue of CERCLA section 101(14) and, in turn, section 102(b). The POM category was one of five broad generic

categories of CAA section 112 hazardous air pollutants codified as a hazardous substance pursuant to CERCLA section 101(14) in 40 CFR 302.4. Section 101(14) of CERCLA states that the term ''hazardous substance'' includes ''any hazardous air pollutant listed under section 112 of the Clean Air Act.'' Thus, the CAA categories automatically became hazardous substances under CERCLA when listed as hazardous air pollutants under section 112 in 1990. In the June 12, 1995 Federal Register (60 FR 30926), the EPA stated that ''All substances within the (CAA section 112 hazardous air pollutants) categories, as well as the categories themselves, are CERCLA hazardous substances'' and that ''CERCLA section 102(b) provides that an RQ of one pound applies to hazardous substances (which include the CAA hazardous air pollutants) until this RQ is adjusted by regulation. Therefore, the section 112 listing of POM in the CAA automatically triggers a one pound RQ for any chemical which falls within the section 112(b) definition of POM. Issuance of a MACT standard requiring control of specific hazardous air pollutants has no additional effect on CERCLA coverage.

C. Compliance Extension for New Sources

The August 26, 1996 proposal included an extension of the compliance date to April 22, 1999 for heat exchange systems, maintenance wastewater, equipment subject to § 63.149, and process wastewater for existing sources. This proposed change was in § 63.100(k)(2)(ii) of the proposed rule.

Several commenters suggested that the compliance schedule should be extended for new sources to April 22, 1999 or initial startup, whichever is later. The commenter's did not state the basis for their belief that more than 2 additional years should be provided for new sources.

While the EPA believes that, in some limited instances new sources may need more time for compliance than was provided in the April 1994 rule, the EPA does not believe that 2 years is justified. In today's final rule the EPA has provided that, in general, new sources that commenced construction or reconstruction up to the date of proposal of the August 1996 amendments continue to have a compliance date of April 22, 1994, (the date of the original final rule) or start-up, whichever is later.

However, some exceptions have been added. Commenters had requested more compliance time for heat exchange systems, maintenance and process wastewater streams, and equipment subject to §63.149 (those pieces of equipment for which a new, later compliance date has been set with respect to existing sources). In response to this request the EPA has decided that heat exchange systems, maintenance wastewater streams, process wastewater streams, and equipment subject to §63.149 that are part of new sources on which construction or reconstruction commenced before proposal of the August 1996 amendments will have a compliance date that is the later of start-up or 180 days from the date of today's final rule.

These exceptions will provide new sources that commenced planning for, or actually achieved compliance with, the April 22, 1994 rule, 6 months more time to allow any minor adjustments necessary to comply with the provisions of today's final rule applicable to the heat exchange system, maintenance and process wastewater streams, and equipment subject to §63.149.

In addition, today's final rule provides that new sources upon which construction or reconstruction commenced after the August 1996 proposal, must be in compliance upon the later of initial start-up or the date of today's final rule.

The EPA believes that 180 days from today is ample time for any new sources that are already in compliance with the April 1994 final rule to make the necessary adjustments to their recordkeeping and reporting procedures to ensure compliance with today's rule. Those sources that commenced construction after December 31, 1992, but have not yet reached start-up will be able to adjust their start-up date to allow time to reach compliance as will any new sources commencing construction after the August 26, 1996 proposal.

D. Delay of Repair for Heat Exchangers

The August proposal included new §63.104 requirements for monitoring heat exchange systems for leaks of process fluids into cooling water. The proposed §63.104 would replace the existing provisions in §63.104 of subpart F. The revisions were proposed to address issues with the existing provisions related to the availability of monitoring methods with sufficient analytical sensitivity, lack of flexibility in some of the requirements, and the burden associated with the monitoring requirements. The proposed §63.104 also included revisions to the delay of repair provisions to allow delay until the next shutdown if a shutdown is planned within 2 months of determination that delay of repair is necessary. The proposed revisions to §63.104 also provided that repair may be delayed up to a maximum of 120 days if the necessary parts or personnel were not available. These new provisions would replace the provisions in the April 1994 rule which only allows delay of repair when it can be demonstrated that immediate shutdown for repair would create more emissions than the emissions that would result from delaying repair of the leaking heat exchanger until the next shutdown. In the August 26, 1996 document, it was explained that the proposed revisions to the delay of repair provisions of the rule were being made to make these provisions workable and to minimize debate over modeling of emissions from heat exchanger systems.

Several commenters objected to this change in the delay of repair provisions in §63.104. The commenters argued that it is inappropriate to require an unscheduled shutdown if it can be demonstrated that greater emissions would result than would occur if the leak were repaired at the next scheduled shutdown. The commenters thought that this change was an unintended result of other changes to the wording of the provision.

As a result of this comment, the EPA reconsidered the circumstances where delay of repair would be appropriate and the approach used to develop an enforceable provision. Based on further examination of situations that might arise in a facility subject to the standard, the EPA concluded that §63.104(e)(2) could be revised to allow delay of repair in situations where greater emissions would result than would occur if the leak were repaired at the next scheduled shutdown if the procedure for calculating emissions were specified in the rule. The revised §63.104(e)(2) includes delay of repair provisions for cases where the maximum potential emissions from the leaking heat exchanger are less than the emissions that would result from an unscheduled shutdown. The proposed 120 day maximum delay due to unavailability of parts or personnel to effect the repair is also retained in the final provisions. The EPA believes that the added provision will address cases involving low flow rate heat exchangers that can not be isolated from the process and where process unit shutdowns may result in substantial emissions. The EPA believes that the revised §63.104(e)(2) provides the flexibility needed while maintaining the enforcability of the provision.

E. Wastewater Issues

1. Point of Determination

In the August 26, 1996 proposal, the EPA proposed to revise the wastewater provisions to base the determination of applicability of control requirements to a wastewater stream on its characteristics at the point where the wastewater stream exits the last recovery device instead of at the point of generation (POG). The new location for determining the characteristics of a wastewater stream was termed the point of determination (POD) to distinguish it from the POG concept used in other air rules for waste and wastewater such as the Benzene Waste NESHAP. This proposed revision was one of several changes proposed to address problems with the clarity and structure of the wastewater provisions in the April 1994 rule.

The public comment on the proposal was supportive of the new POD concept. Therefore, the proposed revision changing from a POG approach to the POD approach is being incorporated into the final rule without revision. However, some public inquiries on the proposal also indicated that confusion exists regarding some details of the concept. Specifically, some readers have mistakenly interpreted POD by confusing the meaning of ''recovery device'' and ''treatment process.'' This section of the preamble sets forth the EPA's intent and emphasizes that key definitions and provisions should be used together to understand and correctly implement the POD concept in this rule.

The EPA's intent in developing the POD approach was to have a decision criterion that is replicable and clearly specifies the location for evaluation of a wastewater stream for the purposes of control. All equipment prior to the POD is considered to be part of the process and equipment downstream of the POD is not considered to be part of the process. The POD is defined as each point where process wastewater exits the chemical manufacturing process unit. To understand the POD approach, other portions of the rule must be understood, especially the definitions of wastewater, recovery device, and treatment process and the provisions in §63.149.

''Wastewater'' is defined, inter alia, as water that is discarded from a chemical manufacturing process unit. Under the revised approach for defining wastewater, a stream does not become wastewater until it exits the last recovery device. At that point, because the stream is no longer being processed or used, it is considered to be discarded. ''Recovery device'' is defined as an individual unit of equipment capable of and normally used for the purpose of recovering chemicals for fuel value, use, or reuse or for sale for one of these purposes.

A ''treatment process'' is defined in the HON as a specific technique that removes or destroys organics in a wastewater stream or residual. Examples of treatment processes are a steam stripper (which separate the organic material from the water) and a biological treatment process (which destroys the organic compounds).

The EPA recognizes that the same categories of equipment, such as oil-water separators or organic removal devices such as decanters or strippers, may be recovery devices or treatment devices depending upon the specific application in a particular process' operations. To determine whether a particular item of equipment should be considered a recovery device or a treatment process, it is necessary to consider the subsequent utilization or disposition of the materials that pass through the item of equipment. If the recovered materials are then used for the same general purpose for which chemicals are utilized within the facility (i.e., used for the chemical properties of the material or for use as a fuel), then the equipment would be considered a recovery device. If the material is not recovered for use, reuse, or fuel value or for sale for use, reuse, or fuel value (under normal circumstances), the equipment can not be considered a recovery device. For example, an organic water separator, such as a steam stripper could not be considered to be a recovery device if the separated organic material is later sent to an incinerator for disposal. However, if the separated organic material were used in a process or incorporated into product, the steam stripper would be considered part of the process.

In developing the POD approach, the EPA assumed that organic hazardous air pollutants containing fluids within the process would be managed in closed systems to minimize losses of a recoverable material. The EPA based this assumption on information provided by industry representatives and the EPA's experience with the chemical industry. The provisions in table 35 of subpart G and the new §63.149 were designed to ensure that conveyance and handling of organic hazardous air pollutants containing process fluids would be handled in a manner consistent with the requirements for wastewater streams subject to control.

The EPA considers the POD approach as appropriate for this rule because the HON addresses the other emission points in the chemical manufacturing process unit. The EPA does not believe that the POD approach would be appropriate for other rules that are not as comprehensive in the coverage of emission points. For example, the POD concept would not be appropriate in cases where it is known that other emission points would not be subject to any control requirements.

2. Clarification of Safety Relief Device Provisions for Waste Management Units

The August proposed revisions to §63.132 included provisions to allow waste management units to be equipped with pressure relief devices needed for safety purposes, §63.132 (a)(2)(i) and (b)(3)(i). Although no comments were received on these proposed provisions, the EPA has received inquiries from some industry representatives and consultants requesting clarification of the intent of these provisions. The inquiries concerned whether these provisions prohibit the use of pressure-vacuum vents on wastewater tanks storing wastewater streams or whether these provisions would allow venting of emissions to the atmosphere of wastewater tanks storing Group 1 wastewater streams.

The intent of the pressure relief valve provisions in §63.132 (a)(2)(i) and (b)(3)(i) is to provide for safety releases in emergency situations only. These provisions provide that a pressure relief device on waste management units is allowed ''provided the pressure relief device is not used for planned or routine venting of emissions.'' These provisions should not be interpreted as providing for routine venting of emissions from waste management units.

Neither should these provisions be interpreted as prohibiting pressure-vacuum vents on fixed roof wastewater tanks allowed for tanks storing wastewater streams with a maximum true vapor pressure of less than: (1) 13.1 kPa if the tank capacity is greater than or equal to 75 m^3 but less than 151 m^3; or (2) less than 5.2 kPa if the tank capacity exceeds 151 m^3 as specified in §63.133(a)(1). The rule requires that tanks meeting these criteria be equipped with a fixed roof and allows the roof to be equipped with openings necessary for operation, inspection, and maintenance. There is no requirement to control emissions from tanks meeting these criteria.

3. Issues Associated With Biological Treatment Processes

The August proposal included provisions that provided easier compliance demonstration options for well-mixed activated sludge systems that are used to control readily biodegraded compounds. In this proposed change to the April 1994 rule, the compounds listed in table 9 of subpart G were divided into three lists. In the proposal, a performance evaluation would not be required for activated sludge systems that met the definition of enhanced biological treatment system and the unit was controlling wastewater streams that contained only list 1 compounds. The proposed revisions to appendix C still required a performance demonstration for activated sludge systems used to treat a combination of list 1 and list 2 and/or list 3 compounds.

All comments on the proposed compliance demonstration provisions for biological treatment systems were supportive of this approach. However, based on conversations with industry representatives, the EPA has learned that some people are misinterpreting the proposed definition of ''enhanced biological treatment system or biological treatment process.'' This section of the preamble sets forth the EPA's intent and reiterates the basis for the proposed compliance demonstration exemption for certain biological treatment units. Because of the potential for misinterpretation of the term, a clarifying change has been made to the proposed definition for ''enhanced biological treatment system or enhanced biological treatment process.''

The proposed revisions to the rule defined an enhanced biological treatment system as an aerated treatment unit(s) that contains biomass suspended in water followed by a clarifier that removes biomass from the treated water and recycles recovered biomass to the aeration unit. The mixed liquor volatile suspended solids (biomass) is greater than 1 kilogram per cubic meter throughout each aeration unit. The biomass is suspended and aerated in the water of the aeration unit(s) by either submerged air flow or mechanical agitation. The EPA's intent in defining the enhanced biological treatment system was to reflect the modeling of an activated sludge system with a well-mixed biological treatment unit that was used to develop the three lists of compounds in table 36. (A well-mixed or completely mixed system is a biological treatment unit where particles entering the tank are dispersed immediately throughout the tank and the system has uniform characteristics (Docket A–90–23, item VII–B–8).) The requirement to recycle biomass indicated an activated sludge system. The requirement to have the biomass suspended and aerated indicated an aerobic biological unit. The phase ''throughout each aeration unit'' was intended to mean that the unit was well-mixed. It is this phrase that is being misinterpreted or overlooked by readers. Therefore, the EPA has slightly revised the definition for enhanced biological treatment systems in today's rule to help clarify the intent. In today's rule the second sentence of the definition reads, ''the mixed liquor volatile suspended solids (biomass) is greater than 1 kilogram per cubic meter homogeneously distributed throughout each aeration unit.'' The additional phrase, ''homogeneously distributed,'' was added to clarify the EPA's intent to define a uniformly well-mixed biological treatment unit. The EPA believes this revision clarifies the original intent and does not alter the meaning of the term.

An example of a system that would meet the enhanced biological treatment system definition would be a conventional well-designed, operated, and maintained activated sludge system. The biological treatment unit of this enhanced biological treatment system would contain a homogeneous mixture or, in other words, the biological treatment unit would have the same concentration, mixed liquor volatile suspended solids (MLVSS), and dissolved oxygen throughout the vessel where the biological reactions occur.

A plug-flow system is an example of a biological treatment system that does not meet the HON enhanced biological treatment system definition. Plug-flow systems typically occur in long tanks with a high length-to-width ratio in which longitudinal dispersion is minimal or absent (Docket A–90–23, item VII–B–8). Plug-flow systems are not considered acceptable units for the compliance demonstration exemption because they may tend to have higher air emissions at the front of the system where the concentration is higher. This is not to say that a well operated plug-flow system would not be an acceptable biological treatment system; however, the EPA was not as confident that the parameters required to operate an acceptable plug-flow system could be defined. These systems are required to demonstrate compliance through use of the procedures in appendix C. Appendix C has been revised to state that the calculation procedures (forms) in the appendix are for well-mixed systems and to include suggestions for ways to address systems that are not uniform well-mixed systems.

F. Miscellaneous Changes

The EPA also made a number of clarifying changes to several sections of the August 1996 proposal. Examples of provisions that were revised to clarify requirements include § 63.145(f)(5), § 63.146(d)(1), and the oxygen control system requirements in section 2.1.6 of Methods 304A and 304B. The EPA believes that these revisions clarify the original intent and do not alter the effect of the rule.

In addition to clarifying changes to the August 1996 proposed amendments to the rule, the EPA also made minor revisions to provide consistency with other similar provisions elsewhere in the rule or in other rules. The EPA slightly revised the provisions in § 63.144(b)(5)(i)(C) to provide consistency between the requirements for use of alternative methods allowed in the HON with similar requirements in 40 CFR part 265, subpart CC (61 FR 59932). One of the changes is to remove a requirement to perform the initial calibration of the analytical system with the compounds for which the analysis is being conducted for Methods 624 and 625. This requirement is already addressed in the procedures outlined in Methods 624 and 625. The other change is to reference a procedure that may be used to add compounds to a method's published list of approved compounds for Methods 624, 625, 1624, and 1625. The record retention requirements for the heat exchanger monitoring plan in § 63.104(c) were revised from the requirements in § 63.103(c) to specify requirements that are similar to the proposed requirements in § 63.152(g)(1)(vi)(D). The revised provisions require that the owner or operator maintain, at all times, the monitoring plan that is currently in use and retain copies of the most recently superceded plan for 15 years. This revision was made to ensure that there could be no misunderstanding that copies of the current plan must be maintained regardless of the duration of the retention period.

G. Technical Corrections

The following amendments are minor technical corrections that were not part of the August 26, 1996 proposal. These changes are being made as part of today's action as a matter of efficiency in rulemaking. Furthermore, these changes are noncontroversial and do not substantively change the requirements of the rule. By promulgating these technical corrections directly as a final rule, the EPA is foregoing an

opportunity for public comment on a notice of proposed rulemaking. Section 553(b) of title 5 of the United States Code and section 307(b) of the CAA permit an agency to forego notice and comment when ''the agency for good cause finds (and incorporates the finding and a brief statement of reasons therefore in the rules issued) that notice and public procedure thereon are impracticable, unnecessary, or contrary to the public interest.'' The EPA finds that notice and comment regarding these minor technical corrections are unnecessary due to their noncontroversial nature and because they do not substantively change the requirements of the HON. The EPA finds that this constitutes good cause under 5 U.S.C. 553(b) for a determination that the issuance of a notice of proposed rulemaking is unncessary.

1. Removal of Caprolactam From Table 2 of 40 CFR Part 63, Subpart F

On June 18, 1996 (61 FR 30816), the EPA took final action deleting caprolactam from the list of hazardous air pollutants under section 112(b) of the CAA. Accordingly, as caprolactam is no longer subject to regulation under section 112(d) of the CAA, the EPA is removing caprolactam from table 2 of 40 CFR part 63, subpart F.

2. Correction of § 63.174(h)(2)

On June 20, 1996 (61 FR 31440), the EPA amended § 63.174(h)(1) of subpart H to replace references to ''glass or glass-lined connectors'' with the terminology ''ceramic or ceramic-lined connectors.'' This change was made to use the more generic terminology for these connectors (60 FR 18074). The need to amend § 63.174(h)(2) was overlooked at the time these amendments were issued. In today's action, the EPA is revising § 63.174(h)(2) to use the terminology ''ceramic or ceramic-lined connectors'' instead of ''glass or glass-lined connectors''. This change will remove an inconsistency in the drafting of § 63.174(h).

IV. Administrative Requirements

A. Paperwork Reduction Act

The Office of Management and Budget (OMB) has approved the information collection requirements contained in the rule under the Provisions of the *Paperwork Reduction Act*, 44 U.S.C. 3501 *et seq.* and has assigned OMB control number 2060–0282. An Information Collection Request (ICR) document was prepared by the EPA (ICR No. 1414.02) and a copy may be obtained from Sandy Farmer, OPPE Regulatory Information Division; U.S. Environmental Protection Agency (2137); 401 M St., S.W.; Washington DC 20460 or by calling (202) 260–2740.

An agency may not conduct or sponsor, and a person is not required to respond to a collection of information unless it displays a currently valid OMB control number. The OMB control numbers for the EPA's regulations are listed in 40 CFR part 9 and 48 CFR Chapter 15.

The changes included in this rule will have no impact on the information collection burden estimates previously made. The changes consist of new definitions, alternative test procedures, and clarifications of requirements. The changes are not additional requirements. Consequently, the ICR has not been revised for this rule.

B. Executive Order 12866 Review

Under Executive Order 12866, the EPA must determine whether the proposed regulatory action is ''significant'' and, therefore, subject to OMB review and the requirements of the Executive Order. The Order defines ''significant'' regulatory action as one that is likely to lead to a rule that may:

(1) Have an annual effect on the economy of $100 million or more or adversely affect in a material way the economy, a sector of the economy, productivity, competition, jobs, the environment, public health or safety in State, local, or tribal governments or communities;

(2) Create a serious inconsistency or otherwise interfere with an action taken or planned by another agency;

(3) Materially alter the budgetary impact of entitlements, grants, user fees, or loan programs or the rights and obligations of recipients thereof; or

(4) Raise novel legal or policy issues arising out of legal mandates, the President's priorities, or the principles set forth in the Executive Order.

The HON rule promulgated on April 22, 1994 was considered ''significant'' under Executive Order 12866, and a regulatory impact analysis was prepared. The amendments issued today clarify the rule and correct structural problems with the drafting of some sections. The amendments also provide additional flexibility for sources and provide opportunities to reduce the recordkeeping and reporting burden. These amendments do not add any new control requirements. Therefore, this regulatory action is considered ''not significant.''

C. Regulatory Flexibility

The EPA has determined that it is not necessary to prepare a regulatory flexibility analysis in connection with this final rule. The EPA has also determined that this rule will not have a significant economic impact on a substantial number of small entities. See the April 22, 1994 Federal Register (59 FR 19449) for the basis for this determination. The changes to the rule remove a reporting requirement and provide additional time to request compliance extensions. Therefore, the changes do not create a burden for any of the regulated entities.

D. Submission to Congress and the General Accounting Office

Under 5 U.S.C. 801(a)(1)(A), as added by the Small Business Regulatory Enforcement Fairness Act of 1996, the EPA submitted a report containing this rule and other required information to the U.S. Senate, the U.S. House of Representatives, and the Comptroller General of the General Accounting Office prior to publication of the rule in today's Federal Register. This rule is not a ''major rule'' as defined by 5 U.S.C. 804(2).

E. Unfunded Mandates Reform Act

Under Section 202 of the Unfunded Mandates Reform Act of 1995 (Unfunded Mandates Act), the EPA must prepare a budgetary impact statement to accompany any proposed or final rule that includes a Federal mandate that may result in estimated costs to State, local, or tribal governments in the aggregate or to the private sector, of $100 million or more. Under Section 205, the EPA must select the most cost-effective and least burdensome alternative that achieves the objectives of the rule and is consistent with statutory requirements. Section 203 requires the EPA to establish a plan for informing and advising any small governments that may be significantly or uniquely impacted by the rule.

The EPA has determined that the action promulgated today does not include a Federal mandate that may result in estimated costs of $100 million or more to either State, local, or tribal governments in the aggregate or to the private sector. Therefore, the requirements of the Unfunded Mandates Act do not apply to this action.

List of Subjects in 40 CFR Part 63

Environmental protection, Air pollution control, Hazardous substances, Reporting and recordkeeping requirements.

Dated: December 26, 1996.

Carol M. Browner,

Administrator.

Chapter I, part 63 of the Code of Federal Regulations is amended as follows:

PART 63—[AMENDED]

1. The authority citation for part 63 continues to read as follows:

Authority: 42 U.S.C. 7401, *et seq.*

Subpart F—National Emission Standards for Organic Hazardous Air Pollutants From the Synthetic Organic Chemical Manufacturing Industry

2. Section 63.100 is amended as follows:

a. By revising paragraphs (b)(2), (c), (e), (f) introductory text, (f)(1), (g) introductory text, (g)(1) introductory text in paragraphs, (g)(2) introductory text, (h)(1) introductory text, (h)(2) introductory text, (h)(1)(i), (h)(2)(i), (h)(2)(ii)(A), (j)(4), (k)(1), (k)(2), (k)(3) introductory text;

b. By redesignating paragraphs (f)(6) through (f)(9) as (f)(8) through (f)(11);

c. By adding paragraphs (f)(6), (f)(7), (g)(3), (g)(4), (h)(3), and (k)(9); and

d. By removing paragraph (h)(2)(v).

The revisions and additions read as follows:

§63.100 Applicability and designation of source.

* * * * *

(b) * * *

(2) Use as a reactant or manufacture as a product, or co-product, one or more of the organic hazardous air pollutants listed in table 2 of this subpart;

* * * * *

(c) The owner or operator of a chemical manufacturing process unit that meets the criteria specified in paragraphs (b)(1) and (b)(3) of this section but does not use as a reactant or manufacture as a product or co-product, any organic hazardous air pollutant listed in table 2 of this subpart shall comply only with the requirements of § 63.103(e) of this subpart. To comply with this subpart, such chemical manufacturing process units shall not be required to comply with the provisions of subpart A of this part.

* * * * *

(e) The source to which this subpart applies is the collection of the process vents; storage vessels; transfer racks; waste management units; maintenance wastewater; heat exchange systems; equipment identified in § 63.149 of subpart G; and pumps, compressors, agitators, pressure relief devices, sampling connection systems, open-ended valves or lines, valves, connectors, instrumentation systems, surge control vessels, and bottoms receivers that are associated with the collection of all chemical manufacturing process units at a major source that meet the criteria specified in paragraphs (b)(1) through (b)(3) of this section. The source also includes equipment required by, or utilized as a method of compliance with this subpart F, subpart G or H of this part which may include control devices and recovery devices.

(1) This subpart applies to maintenance wastewater and heat exchange systems within a source that is subject to this subpart.

(2) This subpart F and subpart G of this part apply to process vents, storage vessels, transfer racks, equipment identified in § 63.149 of subpart G of this part, and wastewater streams and associated treatment residuals within a source that is subject to this subpart.

(3) This subpart F and subpart H of this part apply to pumps, compressors, agitators, pressure relief devices, sampling connection systems, open-ended valves or lines, valves, connectors, instrumentation systems, surge control vessels, and bottoms receivers within a source that is subject to this subpart. If specific items of equipment, comprising part of a chemical manufacturing process unit subject to this subpart, are managed by different administrative organizations (e.g., different companies, affiliates, departments, divisions, etc.), those items of equipment may be aggregated with any chemical manufacturing process unit within the source for all purposes under subpart H of this part, providing there is no delay in the applicable compliance date in § 63.100(k).

(f) The source includes the emission points listed in paragraphs (f)(1) through (f)(11) of this section, but those emission points are not subject to the requirements of this subpart F and subparts G and H of this part. This subpart does not require emission points that are listed in paragraphs (f)(1) through (f)(11) of this section to comply with the provisions of subpart A of this part.

(1) Equipment that is located within a chemical manufacturing process unit that is subject to this subpart but the equipment does not contain organic hazardous air pollutants.

* * * * *

(6) Water from testing of deluge systems;

(7) Water from testing of firefighting systems;

* * * * *

(g) The owner or operator shall follow the procedures specified in paragraphs (g)(1) through (g)(4) of this section to determine whether a storage vessel is part of the source to which this subpart applies.

(1) Where a storage vessel is dedicated to a chemical manufacturing process unit, the storage vessel shall be considered part of that chemical manufacturing process unit.

* * * * *

(2) If a storage vessel is not dedicated to a single chemical manufacturing process unit, then the applicability of this subpart F and subpart G of this part shall be determined according to the provisions in paragraphs (g)(2)(i) through (g)(2)(iii) of this section.

* * * * *

(3) Where a storage vessel is located at a major source that includes one or more chemical manufacturing process units which place material into, or receive materials from the storage vessel, but the storage vessel is located in a tank farm (including a marine tank farm), the applicability of this subpart F and subpart G of this part shall be determined according to the provisions in paragraphs (g)(3)(i) through (g)(3)(iv) of this section.

(i) The storage vessel may only be assigned to a chemical manufacturing process unit that utilizes the storage vessel and does not have an intervening storage vessel for that product (or raw material, as appropriate). With respect to any chemical manufacturing process unit, an intervening storage vessel means a storage vessel connected by hard-piping to the chemical manufacturing process unit and to the storage vessel in the tank farm so that product or raw material entering or leaving the chemical manufacturing process unit flows into (or from) the intervening storage vessel and does not flow directly into (or from) the storage vessel in the tank farm.

(ii) If there is no chemical manufacturing process unit at the major source that meets the criteria of paragraph (g)(3)(i) of this section with respect to a storage vessel, this subpart F and subpart G of this part do not apply to the storage vessel.

(iii) If there is only one chemical manufacturing process unit at the major source that meets the criteria of paragraph (g)(3)(i) of this section with respect to a storage vessel, the storage vessel shall be assigned to that chemical manufacturing process unit. Applicability of this subpart F and subpart G to this part to the storage vessel shall then be determined

according to the provisions of paragraph (b) of this section.

(iv) If there are two or more chemical manufacturing process units at the major source that meet the criteria of paragraph (g)(3)(i) of this section with respect to a storage vessel, the storage vessel shall be assigned to one of those chemical manufacturing process units according to the provisions of paragraph (g)(2) of this section. The predominant use shall be determined among only those chemical manufacturing process units that meet the criteria of paragraph (g)(3)(i) of this section. Applicability of this subpart F and subpart G of this part to the storage vessel shall then be determined according to the provisions of paragraph (b) of this section.

(4) If the storage vessel begins receiving material from (or sending material to) another chemical manufacturing process unit, or ceasing to receive material from (or send material to) a chemical manufacturing process unit, or if the applicability of this subpart F and subpart G of this part to a storage vessel has been determined according to the provisions of paragraphs (g)(2)(i) through (g)(2)(iii) of this section and there is a change so that the predominant use may reasonably have changed, the owner or operator shall reevaluate the applicability of this subpart to the storage vessel.

(h) * * *

(1) Where a loading rack is dedicated to a chemical manufacturing process unit, the loading rack shall be considered part of that specific chemical manufacturing process unit.

(i) If the chemical manufacturing process unit is subject to this subpart according to the criteria specified in paragraph (b) of this section and the loading rack does not meet the criteria specified in paragraphs (f)(9) and (f)(10) of this section, then the loading rack is considered a transfer rack (as defined in § 63.101 of this subpart) and is part of the source to which this subpart applies.

* * * * *

(2) If a loading rack is shared among chemical manufacturing process units, then the applicability of this subpart F and subpart G of this part shall be determined at each loading arm or loading hose according to the provisions in paragraphs (h)(2)(i) through (h)(2)(iv) of this section.

(i) Each loading arm or loading hose that is dedicated to the transfer of liquid organic hazardous air pollutants listed in table 2 of this subpart from a chemical manufacturing process unit to which this subpart applies is part of that chemical manufacturing process unit and is part of the source to which this subpart applies unless the loading arm or loading hose meets the criteria specified in paragraphs (f)(9) or (f)(10) of this section.

(ii) * * *

(A) If the chemical manufacturing process unit is subject to this subpart according to the criteria specified in paragraph (b) of this section, then the loading arm or loading hose is part of the source to which this subpart applies unless the loading arm or loading hose meets the criteria specified in paragraphs (f)(9) or (f)(10) of this section.

* * * * *

(3) If a loading rack that was dedicated to a single chemical manufacturing process unit begins to serve another chemical manufacturing process unit, or if applicability was determined under the provisions of paragraphs (h)(2)(i) through (h)(2)(iv) of this section and there is a change so that the predominant use may reasonably have changed, the owner or operator shall reevaluate the applicability of this subpart to the loading rack, loading arm, or loading hose.

* * * * *

(j) * * *

(4) Process vents from batch operations within a chemical manufacturing process unit;

* * * * *

(k) * * *

(1)(i) New sources that commence construction or reconstruction after December 31, 1992, but before August 27, 1996 shall be in compliance with this subpart F, subparts G and H of this part upon initial start-up or by April 22, 1994, whichever is later, as provided in § 63.6(b) of subpart A of this part, and further, where start-up occurs before January 17, 1997 shall also be in compliance with this subpart F and subparts G and H of this part (as amended on January 17, 1997) by January 17, 1997, except that, with respect to all new sources that commenced construction or reconstruction after December 31, 1992, and before August 27, 1996:

(A) Heat exchange systems and maintenance wastewater, that are part of a new source on which construction or reconstruction commenced after December 31, 1992, but before August 27, 1996, shall be in compliance with this subpart F no later than initial start-up or 180 days after January 17, 1997, whichever is later;

(B) Process wastewater streams and equipment subject to § 63.149, that are part of a new source on which construction or reconstruction commenced after December 31, 1992, but before August 27, 1996, shall be in compliance with this subpart F and subpart G of this part no later than initial start-up or 180 days after January 17, 1997, whichever is later; and

(ii) New sources that commence construction after August 26, 1996 shall be in compliance with this subpart F, subparts G and H of this part upon initial start-up or by January 17, 1997, whichever is later.

(2) Existing sources shall be in compliance with this subpart F and subpart G of this part no later than the dates specified in paragraphs (k)(2)(i) and (k)(2)(ii) of this section, unless an extension has been granted by the Administrator as provided in § 63.151(a)(6) of subpart G of this part or granted by the permitting authority as provided in § 63.6(i) of subpart A of this part.

(i) Process vents, storage vessels, and transfer racks at an existing source shall be in compliance with the applicable sections of this subpart and subpart G of this part no later than April 22, 1997.

(ii) Heat exchange systems and maintenance wastewater shall be in compliance with the applicable sections of this subpart, and equipment subject to § 63.149 and process wastewater streams shall be in compliance with the applicable sections of this subpart and subpart G of this part no later than April 22, 1999, except as provided in paragraphs (k)(2)(ii)(A) and (k)(2)(ii)(B) of this section.

(A) If a process wastewater stream or equipment subject to § 63.149 is subject to the control requirements of subpart G of this part due to the contribution of nitrobenzene to the total annual average concentration (as determined according to the procedures in § 63.144(b) of subpart G of this part), the wastewater stream shall be in compliance no later than January 18, 2000.

(B) If a process wastewater stream is used to generate credits in an emissions average in accordance with § 63.150 of subpart G of this part, the process wastewater stream shall be in compliance with the applicable sections of subpart G of this part no later than April 22, 1997.

(3) Existing sources shall be in compliance with subpart H of this part no later than the dates specified in paragraphs (k)(3)(i) through (k)(3)(v) of this section, except as provided for in paragraphs (k)(4) through (k)(8) of this section, unless an extension has been granted by the Administrator as provided in § 63.182(a)(6) of this part or granted by the permitting authority as provided in § 63.6(i) of subpart A of this part. The group designation for each

process unit is indicated in table 1 of this subpart.

* * * * *

(9) All terms in this subpart F or subpart G of this part that define a period of time for completion of required tasks (e.g., weekly, monthly, quarterly, annual), unless specified otherwise in the section or subsection that imposes the requirement, refer to the standard calendar periods.

(i) Notwithstanding time periods specified in this subpart F or subpart G of this part for completion of required tasks, such time periods may be changed by mutual agreement between the owner or operator and the Administrator, as specified in subpart A of this part (e.g., a period could begin on the compliance date or another date, rather than on the first day of the standard calendar period). For each time period that is changed by agreement, the revised period shall remain in effect until it is changed. A new request is not necessary for each recurring period.

(ii) Where the period specified for compliance is a standard calendar period, if the initial compliance date occurs after the beginning of the period, compliance shall be required according to the schedule specified in paragraphs (k)(9)(ii)(A) or (k)(9)(ii)(B) of this section, as appropriate.

(A) Compliance shall be required before the end of the standard calendar period within which the compliance deadline occurs, if there remain at least 3 days for tasks that must be performed weekly, at least 2 weeks for tasks that must be performed monthly, at least 1 month for tasks that must be performed each quarter, or at least 3 months for tasks that must be performed annually; or

(B) In all other cases, compliance shall be required before the end of the first full standard calendar period after the period within which the initial compliance deadline occurs.

(iii) In all instances where a provision of this subpart F or subpart G of this part requires completion of a task during each of multiple successive periods, an owner or operator may perform the required task at any time during the specified period, provided the task is conducted at a reasonable interval after completion of the task during the previous period.

* * * * *

3. Section 63.101 is amended as follows:

a. By revising the definitions of ''Chemical manufacturing process unit,'' ''Control device'', ''Process vent'', ''Recovery device,'' ''Shutdown'', and ''Start-up'', the first sentence in the definition for ''Transfer rack'', and revising the definitions for ''Unit operation'', and ''Vapor balancing system''; and ''Wastewater''; and

b. By adding in alphabetical order the definitions of ''Fuel gas,'' ''Fuel gas system'', ''On-site or On site'', ''Recapture device'', and ''Waste management unit'' to read as follows:

§ 63.101 Definitions.

* * * * *

Chemical manufacturing process unit means the equipment assembled and connected by pipes or ducts to process raw materials and to manufacture an intended product. A chemical manufacturing process unit consists of more than one unit operation. For the purpose of this subpart, chemical manufacturing process unit includes air oxidation reactors and their associated product separators and recovery devices; reactors and their associated product separators and recovery devices; distillation units and their associated distillate receivers and recovery devices; associated unit operations; associated recovery devices; and any feed, intermediate and product storage vessels, product transfer racks, and connected ducts and piping. A chemical manufacturing process unit includes pumps, compressors, agitators, pressure relief devices, sampling connection systems, open-ended valves or lines, valves, connectors, instrumentation systems, and control devices or systems. A chemical manufacturing process unit is identified by its primary product.

Control device means any combustion device, recovery device, or recapture device. Such equipment includes, but is not limited to, absorbers, carbon adsorbers, condensers, incinerators, flares, boilers, and process heaters. For process vents (as defined in this section), recapture devices are considered control devices but recovery devices are not considered control devices. For a steam stripper, a primary condenser is not considered a control device.

* * * * *

Fuel gas means gases that are combusted to derive useful work or heat.

Fuel gas system means the offsite and onsite piping and flow and pressure control system that gathers gaseous stream(s) generated by onsite operations, may blend them with other sources of gas, and transports the gaseous stream for use as fuel gas in combustion devices or in in-process combustion equipment such as furnaces and gas turbines either singly or in combination.

* * * * *

On-site or *On site* means, with respect to records required to be maintained by this subpart, that the records are stored at a location within a major source which encompasses the affected source. On-site includes, but is not limited to, storage at the chemical manufacturing process unit to which the records pertain, or storage in central files elsewhere at the major source.

* * * * *

Process vent means a gas stream containing greater than 0.005 weight-percent total organic hazardous air pollutants that is continuously discharged during operation of the unit from an air oxidation reactor, other reactor, or distillation unit (as defined in this section) within a chemical manufacturing process unit that meets all applicability criteria specified in § 63.100 (b)(1) through (b)(3) of this subpart. Process vents are gas streams that are discharged to the atmosphere (with or without passing through a control device) either directly or after passing through one or more recovery devices. Process vents exclude relief valve discharges, gaseous streams routed to a fuel gas system(s), and leaks from equipment regulated under subpart H of this part.

* * * * *

Recapture device means an individual unit of equipment capable of and used for the purpose of recovering chemicals, but not normally for use, reuse, or sale. For example, a recapture device may recover chemicals primarily for disposal. Recapture devices include, but are not limited to, absorbers, carbon adsorbers, and condensers.

Recovery device means an individual unit of equipment capable of and normally used for the purpose of recovering chemicals for fuel value (i.e., net positive heating value), use, reuse or for sale for fuel value, use, or reuse. Examples of equipment that may be recovery devices include absorbers, carbon adsorbers, condensers, oil-water separators or organic-water separators, or organic removal devices such as decanters, strippers, or thin-film evaporation units. For purposes of the monitoring, recordkeeping, and reporting requirements of subpart G of this part, recapture devices are considered recovery devices.

* * * * *

Shutdown means for purposes including, but not limited to, periodic maintenance, replacement of equipment, or repair, the cessation of operation of a chemical manufacturing

process unit or a reactor, air oxidation reactor, distillation unit, waste management unit, equipment required or used to comply with this subpart F, subparts G, or H of this part or the emptying and degassing of a storage vessel. Shutdown does not include the routine rinsing or washing of equipment in batch operation between batches.

* * * * *

Start-up means the setting into operation of a chemical manufacturing process unit or a reactor, air oxidation reactor, distillation unit, waste management unit, or equipment required or used to comply with this subpart F, subpart G, or H of this part or a storage vessel after emptying and degassing. Start-up includes initial start-up, operation solely for testing equipment, the recharging of equipment in batch operation, and transitional conditions due to changes in product for flexible operation units.

* * * * *

Transfer rack means the collection of loading arms and loading hoses, at a single loading rack, that are assigned to a chemical manufacturing process unit subject to this subpart according to the procedures specified in § 63.100(h) of this subpart and are used to fill tank trucks and/or railcars with organic liquids that contain one or more of the organic hazardous air pollutants listed in table 2 of this subpart. * * *

* * * * *

Unit operation means one or more pieces of process equipment used to make a single change to the physical or chemical characteristics of one or more process streams. Unit operations include, but are not limited to, reactors, distillation units, extraction columns, absorbers, decanters, dryers, condensers, and filtration equipment.

Vapor balancing system means a piping system that is designed to collect organic hazardous air pollutants vapors displaced from tank trucks or railcars during loading; and to route the collected organic hazardous air pollutants vapors to the storage vessel from which the liquid being loaded originated, or to another storage vessel connected by a common header or to compress and route to a process or a fuel gas system the collected organic hazardous air pollutants vapors.

Waste management unit means the equipment, structure(s), and/or device(s) used to convey, store, treat, or dispose of wastewater streams or residuals. Examples of waste management units include: Wastewater tanks, surface impoundments, individual drain systems, and biological wastewater treatment units. Examples of equipment that may be waste management units include containers, air flotation units, oil-water separators or organic-water separators, or organic removal devices such as decanters, strippers, or thin-film evaporation units. If such equipment is used for recovery then it is part of a chemical manufacturing process unit and is not a waste management unit.

Wastewater means water that:

(1) Contains either:

(i) an annual average concentration of Table 9 compounds (as defined in § 63.111 of subpart G of this part) of at least 5 parts per million by weight and has an annual average flow rate of 0.02 liter per minute or greater, or

(ii) An annual average concentration of Table 9 compounds (as defined in § 63.111 of subpart G) of at least 10,000 parts per million by weight at any flow rate, and that

(2) Is discarded from a chemical manufacturing process unit that meets all of the criteria specified in § 63.100 (b)(1) through (b)(3) of this subpart. Wastewater is process wastewater or maintenance wastewater.

4. Section 63.102 is amended by revising paragraphs (a)(1) and (a)(2); adding paragraphs (a)(3) and (a)(4) to read as follows:

§ 63.102 General standards.

(a) * * *

(1) The provisions set forth in this subpart F and subpart G of this part shall apply at all times except during periods of start-up or shutdown (as defined in § 63.101 of this subpart), malfunction, or non-operation of the chemical manufacturing process unit (or specific portion thereof) resulting in cessation of the emissions to which this subpart F and subpart G of this part apply. However, if a start-up, shutdown, malfunction or period of non-operation of one portion of a chemical manufacturing process unit does not affect the ability of a particular emission point to comply with the specific provisions to which it is subject, then that emission point shall still be required to comply with the applicable provisions of this subpart F and subpart G of this part during the start-up, shutdown, malfunction or period of non-operation. For example, if there is an overpressure in the reactor area, a storage vessel in the chemical manufacturing process unit would still be required to be controlled in accordance with § 63.119 of subpart G of the part. Similarly, the degassing of a storage vessel would not affect the ability of a process vent to meet the requirements of § 63.113 of subpart G of this part.

(2) The provisions set forth in subpart H of this part shall apply at all times except during periods of start-up or shutdown, as defined in § 63.101(b) of this subpart, malfunction, process unit shutdown (as defined in § 63.161 of subpart H of this part), or non-operation of the chemical manufacturing process unit (or specific portion thereof) in which the lines are drained and depressurized resulting in cessation of the emissions to which subpart H of this part applies.

(3) The owner or operator shall not shut down items of equipment that are required or utilized for compliance with the provisions of this subpart F, subpart G or H of this part during times when emissions (or, where applicable, wastewater streams or residuals) are being routed to such items of equipment, if the shutdown would contravene requirements of this subpart F, subpart G or H of this part applicable to such items of equipment. This paragraph does not apply if the item of equipment is malfunctioning, or if the owner or operator must shut down the equipment to avoid damage due to a contemporaneous start-up, shutdown, or malfunction of the chemical manufacturing process unit or portion thereof.

(4) During start-ups, shutdowns, and malfunctions when the requirements of this subpart F, subparts G and/or H of this part do not apply pursuant to paragraphs (a)(1) through (a)(3) of this section, the owner or operator shall implement, to the extent reasonably available, measures to prevent or minimize excess emissions to the extent practical. For purposes of this paragraph, the term ''excess emissions'' means emissions in excess of those that would have occurred if there were no start-up, shutdown, or malfunction and the owner or operator complied with the relevant provisions of this subpart F, subparts G and/or H of this part. The measures to be taken shall be identified in the applicable start-up, shutdown, and malfunction plan, and may include, but are not limited to, air pollution control technologies, recovery technologies, work practices, pollution prevention, monitoring, and/or changes in the manner of operation of the source. Back-up control devices are not required, but may be used if available.

* * * * *

5. Section 63.103 is amended by adding two sentences to the end of the introductory text of paragraph (c); revising paragraphs (c)(1), (c)(2)(i), (c)(2)(ii), and (c)(2)(iii); removing paragraph (c)(2)(iv); revising paragraph (d)(1); revising paragraph (e); and

revising the last sentence of paragraph (f) to read as follows:

§ 63.103 General compliance, reporting, and recordkeeping provisions.

* * * * *

(c) * * * If an owner or operator submits copies of reports to the applicable EPA Regional Office, the owner or operator is not required to maintain copies of reports. If the EPA Regional Office has waived the requirement of § 63.10(a)(4)(ii) for submittal of copies of reports, the owner or operator is not required to maintain copies of reports.

(1) All applicable records shall be maintained in such a manner that they can be readily accessed. The most recent 6 months of records shall be retained on site or shall be accessible from a central location by computer or other means that provides access within 2 hours after a request. The remaining four and one-half years of records may be retained offsite. Records may be maintained in hard copy or computer-readable form including, but not limited to, on paper, microfilm, computer, floppy disk, magnetic tape, or microfiche.

(2) * * *

(i) Records of the occurrence and duration of each start-up, shutdown, and malfunction of operation of process equipment or of air pollution control equipment or continuous monitoring systems used to comply with this subpart F, subpart G, or H of this part during which excess emissions (as defined in § 63.102(a)(4)) occur.

(ii) For each start-up, shutdown, and malfunction during which excess emissions (as defined in § 63.102(a)(4)) occur, records that the procedures specified in the source's start-up, shutdown, and malfunction plan were followed, and documentation of actions taken that are not consistent with the plan. For example, if a start-up, shutdown, and malfunction plan includes procedures for routing a control device to a backup control device (e.g., the incinerator for a halogenated stream could be routed to a flare during periods when the primary control device is out of service), records must be kept of whether the plan was followed. These records may take the form of a ''checklist,'' or other form of recordkeeping that confirms conformance with the start-up, shutdown, and malfunction plan for the event.

(iii) For continuous monitoring systems used to comply with subpart G of this part, records documenting the completion of calibration checks and maintenance of continuous monitoring systems that are specified in the manufacturer's instructions or other written procedures that provide adequate assurance that the equipment would reasonably be expected to monitor accurately.

* * * * *

(d) * * *

(1) Wherever subpart A of this part specifies ''postmark'' dates, submittals may be sent by methods other than the U.S. Mail (e.g., by fax or courier). Submittals shall be sent on or before the specified date.

* * * * *

(e) The owner or operator of a chemical manufacturing process unit which meets the criteria of § 63.100(b)(1) and § 63.100(b)(3), but not the criteria of § 63.100(b)(2), shall comply with the requirements of either paragraph (e)(1) or (e)(2) of this section.

(1) Retain information, data, and analysis used to determine that the chemical manufacturing process unit does not use as a reactant or manufacture as a product or co-product any organic hazardous air pollutant. Examples of information that could document this include, but are not limited to, records of chemicals purchased for the process, analyses of process stream composition, engineering calculations, or process knowledge.

(2) When requested by the Administrator, demonstrate that the chemical manufacturing process unit does not use as a reactant or manufacture as a product or co-product any organic hazardous air pollutant.

* * * * *

(f) * * * Compliance with this subpart F and subpart G of this part shall be no later than April 22, 1997, or as otherwise specified in § 63.100(k)(2)(ii) of this subpart, unless an extension has been granted by the EPA Regional Office or permitting authority as provided in § 63.6(i) of subpart A of this part.

* * * * *

6. Section 63.104 is revised to read as follows:

§ 63.104 Heat exchange system requirements.

(a) Unless one or more of the conditions specified in paragraphs (a)(1) through (a)(6) of this section are met, owners and operators of sources subject to this subpart shall monitor each heat exchange system used to cool process equipment in a chemical manufacturing process unit meeting the conditions of § 63.100 (b)(1) through (b)(3) of this subpart, except for chemical manufacturing process units meeting the condition specified in § 63.100(c) of this subpart, according to the provisions in either paragraph (b) or (c) of this section. Whenever a leak is detected, the owner or operator shall comply with the requirements in paragraph (d) of this section.

(1) The heat exchange system is operated with the minimum pressure on the cooling water side at least 35 kilopascals greater than the maximum pressure on the process side.

(2) There is an intervening cooling fluid, containing less than 5 percent by weight of total hazardous air pollutants listed in table 4 of this subpart, between the process and the cooling water. This intervening fluid serves to isolate the cooling water from the process fluid and the intervening fluid is not sent through a cooling tower or discharged. For purposes of this section, discharge does not include emptying for maintenance purposes.

(3) The once-through heat exchange system is subject to a National Pollution Discharge Elimination System (NPDES) permit with an allowable discharge limit of 1 part per million or less above influent concentration or 10 percent or less above influent concentration, whichever is greater.

(4) The once-through heat exchange system is subject to an NPDES permit that:

(i) Requires monitoring of a parameter(s) or condition(s) to detect a leak of process fluids into cooling water;

(ii) Specifies or includes the normal range of the parameter or condition;

(iii) Requires monitoring for the parameters selected as leak indicators no less frequently than monthly for the first six months and quarterly thereafter; and

(iv) Requires the owner or operator to report and correct leaks to the cooling water when the parameter or condition exceeds the normal range.

(5) The recirculating heat exchange system is used to cool process fluids that contain less than 5 percent by weight of total hazardous air pollutants listed in table 4 of this subpart.

(6) The once-through heat exchange system is used to cool process fluids that contain less than 5 percent by weight of total hazardous air pollutants listed in table 9 of subpart G of this part.

(b) The owner or operator who elects to comply with the requirements of paragraph (a) of this section by monitoring the cooling water for the presence of one or more organic hazardous air pollutants or other representative substances whose presence in cooling water indicates a leak shall comply with the requirements specified in paragraphs (b)(1) through (b)(6) of this section. The cooling water shall be monitored for total hazardous

air pollutants, total volatile organic compounds, total organic carbon, one or more speciated HAP compounds, or other representative substances that would indicate the presence of a leak in the heat exchange system.

(1) The cooling water shall be monitored monthly for the first 6 months and quarterly thereafter to detect leaks.

(2)(i) For recirculating heat exchange systems (cooling tower systems), the monitoring of speciated hazardous air pollutants or total hazardous air pollutants refers to the hazardous air pollutants listed in table 4 of this subpart.

(ii) For once-through heat exchange systems, the monitoring of speciated hazardous air pollutants or total hazardous air pollutants refers to the hazardous air pollutants listed in table 9 of subpart G of this part.

(3) The concentration of the monitored substance(s) in the cooling water shall be determined using any EPA-approved method listed in part 136 of this chapter as long as the method is sensitive to concentrations as low as 10 parts per million and the same method is used for both entrance and exit samples. Alternative methods may be used upon approval by the Administrator.

(4) The samples shall be collected either at the entrance and exit of each heat exchange system or at locations where the cooling water enters and exits each heat exchanger or any combination of heat exchangers.

(i) For samples taken at the entrance and exit of recirculating heat exchange systems, the entrance is the point at which the cooling water leaves the cooling tower prior to being returned to the process equipment and the exit is the point at which the cooling water is introduced to the cooling tower after being used to cool the process fluid.

(ii) For samples taken at the entrance and exit of once-through heat exchange systems, the entrance is the point at which the cooling water enters and the exit is the point at which the cooling water exits the plant site or chemical manufacturing process units.

(iii) For samples taken at the entrance and exit of each heat exchanger or any combination of heat exchangers in chemical manufacturing process units, the entrance is the point at which the cooling water enters the individual heat exchanger or group of heat exchangers and the exit is the point at which the cooling water exits the heat exchanger or group of heat exchangers.

(5) A minimum of three sets of samples shall be taken at each entrance and exit as defined in paragraph (b)(4) of this section. The average entrance and exit concentrations shall then be calculated. The concentration shall be corrected for the addition of any makeup water or for any evaporative losses, as applicable.

(6) A leak is detected if the exit mean concentration is found to be greater than the entrance mean using a one-sided statistical procedure at the 0.05 level of significance and the amount by which it is greater is at least 1 part per million or 10 percent of the entrance mean, whichever is greater.

(c) The owner or operator who elects to comply with the requirement of paragraph (a) of this section by monitoring using a surrogate indicator of heat exchange system leaks shall comply with the requirements specified in paragraphs (c)(1) through (c)(3) of this section. Surrogate indicators that could be used to develop an acceptable monitoring program are ion specific electrode monitoring, pH, conductivity or other representative indicators.

(1) The owner or operator shall prepare and implement a monitoring plan that documents the procedures that will be used to detect leaks of process fluids into cooling water. The plan shall require monitoring of one or more surrogate indicators or monitoring of one or more process parameters or other conditions that indicate a leak. Monitoring that is already being conducted for other purposes may be used to satisfy the requirements of this section. The plan shall include the information specified in paragraphs (c)(1)(i) and (c)(1)(ii) of this section.

(i) A description of the parameter or condition to be monitored and an explanation of how the selected parameter or condition will reliably indicate the presence of a leak.

(ii) The parameter level(s) or conditions(s) that shall constitute a leak. This shall be documented by data or calculations showing that the selected levels or conditions will reliably identify leaks. The monitoring must be sufficiently sensitive to determine the range of parameter levels or conditions when the system is not leaking. When the selected parameter level or condition is outside that range, a leak is indicated.

(iii) The monitoring frequency which shall be no less frequent than monthly for the first 6 months and quarterly thereafter to detect leaks.

(iv) The records that will be maintained to document compliance with the requirements of this section.

(2) If a substantial leak is identified by methods other than those described in the monitoring plan and the method(s) specified in the plan could not detect the leak, the owner or operator shall revise the plan and document the basis for the changes. The owner or operator shall complete the revisions to the plan no later than 180 days after discovery of the leak.

(3) The owner or operator shall maintain, at all times, the monitoring plan that is currently in use. The current plan shall be maintained on-site, or shall be accessible from a central location by computer or other means that provides access within 2 hours after a request. If the monitoring plan is superseded, the owner or operator shall retain the most recent superseded plan at least until 5 years from the date of its creation. The superseded plan shall be retained on-site (or accessible from a central location by computer or other means that provides access within two hours after a request) for at least 6 months after its creation.

(d) If a leak is detected according to the criteria of paragraph (b) or (c) of this section, the owner or operator shall comply with the requirements in paragraphs (d)(1) and (d)(2) of this section, except as provided in paragraph (e) of this section.

(1) The leak shall be repaired as soon as practical but not later than 45 calendar days after the owner or operator receives results of monitoring tests indicating a leak. The leak shall be repaired unless the owner or operator demonstrates that the results are due to a condition other than a leak.

(2) Once the leak has been repaired, the owner or operator shall confirm that the heat exchange system has been repaired within 7 calendar days of the repair or startup, whichever is later.

(e) Delay of repair of heat exchange systems for which leaks have been detected is allowed if the equipment is isolated from the process. Delay of repair is also allowed if repair is technically infeasible without a shutdown and any one of the conditions in paragraph (e)(1) or (e)(2) of this section is met. All time periods in paragraphs (e)(1) and (e)(2) of this section shall be determined from the date when the owner or operator determines that delay of repair is necessary.

(1) If a shutdown is expected within the next 2 months, a special shutdown before that planned shutdown is not required.

(2) If a shutdown is not expected within the next 2 months, the owner or operator may delay repair as provided in paragraph (e)(2)(i) or (e)(2)(ii) of this section. Documentation of a decision to delay repair shall state the reasons repair was delayed and shall specify a

schedule for completing the repair as soon as practical.

(i) If a shutdown for repair would cause greater emissions than the potential emissions from delaying repair, the owner or operator may delay repair until the next shutdown of the process equipment associated with the leaking heat exchanger. The owner or operator shall document the basis for the determination that a shutdown for repair would cause greater emissions than the emissions likely to result from delaying repair as specified in paragraphs (e)(2)(i)(A) and (e)(2)(i)(B) of this section.

(A) The owner or operator shall calculate the potential emissions from the leaking heat exchanger by multiplying the concentration of total hazardous air pollutants listed in table 4 of this subpart in the cooling water from the leaking heat exchanger by the flowrate of the cooling water from the leaking heat exchanger by the expected duration of the delay. The owner or operator may calculate potential emissions using total organic carbon concentration instead of total hazardous air pollutants listed in table 4 of this subpart.

(B) The owner or operator shall determine emissions from purging and depressurizing the equipment that will result from the unscheduled shutdown for the repair.

(ii) If repair is delayed for reasons other than those specified in paragraph (e)(2)(i) of this section, the owner or operator may delay repair up to a maximum of 120 calendar days. The owner shall demonstrate that the necessary parts or personnel were not available.

(f)(1) *Required records*. The owner or operator shall retain the records identified in paragraphs (f)(1)(i) through (f)(1)(iv) of this section as specified in § 63.103(c)(1).

(i) Monitoring data required by this section indicating a leak and the date when the leak was detected, and if demonstrated not to be a leak, the basis for that determination;

(ii) Records of any leaks detected by procedures subject to paragraph (c)(2) of this section and the date the leak was discovered;

(iii) The dates of efforts to repair leaks; and

(iv) The method or procedure used to confirm repair of a leak and the date repair was confirmed.

(2) *Reports*. If an owner or operator invokes the delay of repair provisions for a heat exchange system, the following information shall be submitted in the next semi-annual periodic report required by § 63.152(c) of subpart G of this part. If the leak remains unrepaired, the information shall also be submitted in each subsequent periodic report, until repair of the leak is reported.

(i) The owner or operator shall report the presence of the leak and the date that the leak was detected.

(ii) The owner or operator shall report whether or not the leak has been repaired.

(iii) The owner or operator shall report the reason(s) for delay of repair. If delay of repair is invoked due to the reasons described in paragraph (e)(2) of this section, documentation of emissions estimates must also be submitted.

(iv) If the leak remains unrepaired, the owner or operator shall report the expected date of repair.

(v) If the leak is repaired, the owner or operator shall report the date the leak was successfully repaired.

7. Current tables 2 and 3 of subpart F are revised and table 4 is added to read as follows:

TABLE 2 TO SUPBART F—ORGANIC HAZARDOUS AIR POLLUTANTS

Chemical name [a,b]	CAS No.[c]
Acenaphthene	83329
Acetaldehyde	75070
Acetamide	60355
Acetonitrile	75058
Acetophenone	98862
Acrolein	107028
Acrylamide	79061
Acrylic acid	79107
Acrylonitrile	107131
Alizarin	72480
Allyl chloride	107051
Aniline	62533
Anisidine (o-)	90040
Anthracene	120127
Anthraquinone	84651
Benzene	71432
Benzotrichloride	98077
Benzyl chloride	100447
Biphenyl	92524
Bis(chloromethyl)ether	542881
Bromoform	75252
Bromonaphthalene	27497514
Butadiene (1,3-)	106990
Carbon disulfide	75150
Carbon tetrachloride	56235
Chloroacetic acid	79118
Chloroacetophenone (2-)	532274
Chlorobenzene	108907
2–Chloro-,1,3-butadiene (Chloroprene)	126998
Chloroform	67663
Chloronaphthalene	25586430
Chrysene	218019
Cresols and cresylic acids (mixed)	1319773
Cresol and cresylic acid (o-)	95487
Cresol and cresylic acid (m-)	108394

TABLE 2 TO SUPBART F—ORGANIC HAZARDOUS AIR POLLUTANTS—Continued

Chemical name [a,b]	CAS No.[c]
Cresol and cresylic acid (p-)	106445
Cumene	98828
Dichlorobenzene (p-)	106467
Dichlorobenzidine (3,3′-)	91941
Dichloroethane (1,2-) (Ethylene dichloride) (EDC)	107062
Dichloroethylether (Bis(2-chloroethyl)ether)	111444
Dichloropropene (1,3-)	542756
Diethanolamine (2,2′-Iminodiethanol)	111422
Dimethylaniline (N,N-)	121697
Diethyl sulfate	64675
Dimethylbenzidine (3,3′-)	119937
Dimethylformamide (N,N-)	68122
Dimethylhydrazine (1,1-)	58147
Dimethylphthalate	131113
Dimethylsulfate	77781
Dinitrophenol (2,4-)	51285
Dinitrotoluene (2,4-)	121142
Dioxane (1,4-) (1,4–Diethyleneoxide)	123911
1,2–Diphenylhydrazine	122667
Epichlorohydrin (1–Chloro-2,3-epoxypropane)	106898
Ethyl acrylate	140885
Ethylbenzene	100414
Ethyl chloride (Chloroethane)	75003
Ethylene dibromide (Dibromoethane)	106934
Ethylene glycol	107211
Ethylene oxide	75218
Ethylidene dichloride (1,1–Dichloroethane)	75343
Fluoranthene	206440
Formaldehyde	50000
Glycol ethers[d].	
Hexachlorobenzene	118741
Hexachlorobutadiene	87683
Hexachloroethane	67721
Hexane	110543
Hydroquinone	123319
Isophorone	78591
Maleic anhydride	108316
Methanol	67561
Methylbromide (Bromomethane)	74839
Methylchloride (Chloromethane)	74873
Methyl ethyl ketone (2–Butanone)	78933
Methyl hydrazine	60344
Methyl isobutyl ketone (Hexone)	108101
Methyl isocyanate	624839
Methyl methacrylate	80626
Methyl tert-butyl ether	1634044
Methylene chloride (Dichloromethane)	75092
Methylene diphenyl diisocyanate (4,4′-) (MDI)	101688
Methylenedianiline (4,4′-)	101779
Naphthalene	91203
Naphthalene sulfonic acid (α)	85472
Naphthalene sulfonic acid (β)	120183
Naphthol (α)	90153
Naphthol (β)	135193
Naphtholsulfonic acid (1-)	567180
Naphthylamine sulfonic acid (1,4-)	84866
Naphthylamine sulfonic acid (2,1-)	81163
Naphthylamine (1-)	134327
Naphthylamine (2-)	91598
Nitronaphthalene (1-)	86577
Nitrobenzene	98953
Nitrophenol (p-)	100027
Nitropropane (2-)	79469
Phenanthrene	85018
Phenol	108952
Phenylenediamine (p-)	106503
Phosgene	75445
Phthalic anhydride	85449
Propiolactone (beta-)	57578
Propionaldehyde	123386
Propylene dichloride (1,2–Dichloropropane)	78875
Propylene oxide	75569

TABLE 2 TO SUPBART F—ORGANIC HAZARDOUS AIR POLLUTANTS—Continued

Chemical name [a,b]	CAS No.[c]
Pyrene	129000
Quinone	106514
Styrene	100425
Tetrachloroethane (1,1,2,2-)	79345
Tetrachloroethylene (Perchloroethylene)	127184
Tetrahydronaphthalene	119642
Toluene	108883
Toluene diamine (2,4-)	95807
Toluene diisocyanate (2,4-)	584849
Toluidine (o-)	95534
Trichlorobenzene (1,2,4-)	120821
Trichloroethane (1,1,1-) (Methyl chloroform)	71556
Trichloroethane (1,1,2-) (Vinyl trichloride)	79005
Trichloroethylene	79016
Trichlorophenol (2,4,5-)	95954
Triethylamine	121448
Trimethylpentane (2,2,4-)	540841
Vinyl acetate	108054
Vinyl chloride (Chloroethylene)	75014
Vinylidene chloride (1,1–Dichloroethylene)	75354
Xylenes (NOS)	1330207
Xylene (m-)	108383
Xylene (o-)	95476
Xylene (p-)	106423

[a] For all Listings above containing the word ''Compounds,'' the following applies: Unless otherwise specified, these listings are defined as including any unique chemical substance that contains the named chemical (i.e., antimony, arsenic) as part of that chemical's infrastructure.

[b] Isomer means all structural arrangements for the same number of atoms of each element and does not mean salts, esters, or derivatives.

[c] CAS No.=Chemical Abstract Service number.

[d] Includes mono- and di- ethers of ethylene glycol, diethylene glycol, and triethylene glycol R-$(OCH_2CH_2)_n$-OR where:

n=1, 2, or 3;

R=alkyl or aryl groups; and

R′=R, H or groups which, when removed, yield glycol ethers with the structure:

R-$(OCH_2CH_2)_n$-OH

Polymers are excluded from the glycol category.

TABLE 3.—GENERAL PROVISIONS APPLICABILITY TO SUBPARTS F, G, AND H[a]

Reference	Applies to subparts F, G, and H	Comment
63.1(a)(1)	Yes	Overlap clarified in § 63.101, § 63.111, § 63.161.
63.1(a)(2)	Yes.	
63.1(a)(3)	Yes	§ 63.110 and § 63.160(b) of subparts G and H identify which standards are overridden.
63.1(a)(4)	No	Subpart F specifies applicability of each paragraph in subpart A to subparts F, G, and H.
63.1 (a)(5)—(a)(9)	No.	
63.1(a)(10)	No	Subparts F, G, and H specify calendar or operating day.
63.1(a)(11)	No	Subpart F § 63.103(d) specifies acceptable methods for submitting reports.[a]
63.1 (a)(12)—(a)(14)	Yes.	
63.1(b)(1)	No	Subpart F specifies applicability.
63.1(b)(2)	Yes.	
63.1(b)(3)	No.	
63.1(c)(1)	No	Subpart F specifies applicability.
63.1(c)(2)	No	Area sources are not subject to subparts F, G, and H.
63.1(c)(3)	No.	
63.1(c)(4)	Yes.	
63.1(c)(5)	No	Subparts G and H specify applicable notification requirements.
63.1(d)	No.	
63.1(e)	No	Subparts F, G, and H established before permit program.
63.2	Yes	Subpart F § 63.101(a) specifies those subpart A definitions that apply to the HON. Subpart F definition of ''source'' is equivalent to subpart A definition of ''affected source.''
63.3	No	Units of measure are spelled out in subparts F, G, and H.
63.4 (a)(1)—(a)(3)	Yes.	
63.4(a)(4)	No	This is a reserved paragraph in subpart A of part 63.
63.4(a)(5)	Yes.	
63.4(b)	Yes.	
63.4(c)	Yes.	
63.5(a)(1)	Yes	Except the terms ''source'' and ''stationary source'' in § 63.5(a)(1) should be interpreted as having the same meaning as ''affected source.''

TABLE 3.—GENERAL PROVISIONS APPLICABILITY TO SUBPARTS F, G, AND H[a]—Continued

Reference	Applies to subparts F, G, and H	Comment
63.5(a)(2)	Yes.	
63.5(b)(1)	Yes	Except § 63.100(l) defines when construction or reconstruction is subject to standards for new sources.
63.5(b)(2)	No	This is a reserved paragraph in subpart A of part 63.
63.5(b)(3)	Yes.	
63.5(b)(4)	Yes	Except the cross reference to § 63.9(b) is limited to § 63.9(b) (4) and (5). Subpart F overrides § 63.9 (b)(1) through (b)(3).
63.5(b)(5)	Yes.	
63.5(b)(6)	Yes	Except § 63.100(l) defines when construction or reconstruction is subject to standards for new sources.
63.5(c)	No	This is a reserved paragraph in subpart A of part 63.
63.5(d)(1)(i)	No	For subpart G, see § 63.151(b) (2)(ii) and (2)(iii) for the applicability and timing of this submittal; for subpart H, see § 63.182(b) (2)(ii) and (b)(2)(iii) for applicability and timing of this submittal.
63.5(d)(1)(ii)	Yes	Except § 63.5(d)(1)(ii)(H) does not apply.
63.5(d)(1)(iii)	No	Subpart G requires submittal of the Notification of Compliance Status in § 63.152(b); subpart H specifies requirements in § 63.182(c).
63.5(d)(2)	No.	
63.5(d)(3)	Yes—subpart G No—subpart H.	Except § 63.5(d)(3)(ii) does not apply to subpart G.
63.5(d)(4)	Yes.	
63.5(e)	Yes.	
63.5(f)(1)	Yes.	
63.5(f)(2)	Yes	Except the cross-reference to § 63.5(d)(1) is changed to § 63.151(b)(2)(ii) of subpart G and to § 63.182(b)(2)(ii) of subpart H. The cross-reference to § 63.5(b)(2) does not apply.
63.6(a)	Yes.	
63.6(b)(1)	No	Subparts F and H specify compliance dates for sources subject to subparts F, G, and H.
63.6(b)(2)	No.	
63.6(b)(3)	Yes.	
63.6(b)(4)	No	May apply when standards are proposed under Section 112(f) of the Clean Air Act.
63.6(b)(5)	No	Subparts G and H include notification requirements.
63.6(b)(6)	No.	
63.6(b)(7)	No.	
63.6(c)(1)	No	Subpart F specifies the compliance dates for subparts G and H.
63.6(c)(2)	No.	
63.6(c)(3)	No.	
63.6(c)(4)	No.	
63.6(c)(5)	Yes.	
63.6(d)	No.	
63.6(e)	Yes	Except as otherwise specified for individual paragraphs. Does not apply to Group 2 emission points unless they are included in an emissions average.[b]
63.6(e)(1)(i)	No	This is addressed by § 63.102(a)(4) of subpart F.
63.6(e)(1)(ii)	Yes.	
63.6(e)(1)(iii)	Yes.	
63.6(e)(2)	Yes.	
63.6(e)(3)(i)	Yes	For subpart H, the startup, shutdown, and malfunction plan requirement of § 63.6(e)(3)(i) is limited to control devices subject to the provisions of subpart H and is optional for other equipment subject to subpart H. The startup, shutdown, and malfunction plan may include written procedures that identify conditions that justify a delay of repair.
63.6(e)(3)(i)(A)	No	This is addressed by § 63.102(a)(4).
63.6(e)(3)(i)(B)	Yes.	
63.6(e)(3)(i)(C)	Yes.	
63.6(e)(3)(ii)	Yes.	
63.6(e)(3)(iii)	No	Recordkeeping and reporting are specified in § 63.103(c)(2) of subpart F and § 63.152(d)(1) of subpart G.
63.6(e)(3)(iv)	No	Recordkeeping and reporting are specified in § 63.103(c)(2) of subpart F and § 63.152(d)(1) of subpart G.
63.6(e)(3)(v)	No	Records retention requirements are specified in § 63.103(c).
63.6(e)(3)(vi)	Yes.	
63.6(e)(3)(vii)	Yes.	
63.6(e)(3)(vii)(A)	Yes.	
63.6(e)(3)(vii)(B)	Yes	Except the plan must provide for operation in compliance with § 63.102(a)(4).
63.6(e)(3)(vii)(C)	Yes.	
63.6(e)(3)(viii)	Yes.	
63.6(f)(1)	No	§ 63.102(a) of subpart F specifies when the standards apply.

TABLE 3.—GENERAL PROVISIONS APPLICABILITY TO SUBPARTS F, G, AND H[a]—Continued

Reference	Applies to subparts F, G, and H	Comment
63.6(f)(2)(i)	Yes.	
63.6(f)(2)(ii)	Yes—subpart G No—subpart H.	§ 63.152(c)(2) of subpart G specifies the use of monitoring data in determining compliance with subpart G.
63.6(f)(2)(iii) (A), (B), and (C)	Yes.	
63.6(f)(2)(iii)(D)	No.	
63.6(f)(2)(iv)	Yes.	
63.6(f)(2)(v)	Yes.	
63.6(f)(3)	Yes.	
63.6(g)	No	Procedures specified in § 63.102(b) of subpart F.
63.6(h)	No.	
63.6(i)(1)	Yes.	
63.6(i)(2)	Yes.	
63.6(i)(3)	No	For subpart G, § 63.151(a)(6) specifies procedures; for subpart H, § 63.182(a)(6) specifies procedures.
63.6(i)(4)(i)(A)	Yes.	
63.6(i)(4)(i)(B)	No	Dates are specified in § 63.151(a)(6)(i) of subpart G and § 63.182(a)(6)(i) of subpart H.
63.6(i)(4)(ii)	No.	
63.6(i) (5)—(14)	Yes.	
63.6(i)(15)	No.	
63.6(i)(16)	Yes.	
63.6(j)	Yes.	
63.7(a)(1)	No	Subparts F, G, and H specify required testing and compliance demonstration procedures.
63.7(a)(2)	No	For subpart G, test results must be submitted in the Notification of Compliance Status due 150 days after compliance date, as specified in § 63.152(b); for subpart H, all test results subject to reporting are reported in periodic reports.
63.7(a)(3)	Yes.	
63.7(b)	No.	
63.7(c)	No.	
63.7(d)	Yes.	
63.7(e)(1)	Yes.	
63.7(e)(2)	Yes.	
63.7(e)(3)	No	Subparts F, G, and H specify test methods and procedures.
63.7(e)(4)	Yes.	
63.7(f)	No	Subparts F, G, and H specify applicable methods and provide alternatives.
63.7(g)	No	Performance test reporting specified in § 63.152(b) of subpart G: Not applicable to subpart H because no performance test required by subpart H.
63.7(h)(1)	Yes.	
63.7(h)(2)	Yes.	
63.7(h)(3)	No	§ 63.103(b)(5) of subpart F specifies provisions for requests to waive performance tests.
63.7(h)(4)	No.	
63.7(h)(5)	Yes.	
63.8(a)(1)	Yes.	
63.8(a)(2)	No.	
63.8(a)(3)	No.	
63.8(a)(4)	Yes.	
63.8(b)(1)	Yes.	
63.8(b)(2)	No	Subparts G and H specify locations to conduct monitoring.
63.8(b)(3)	Yes.	
63.8(c)(1)(i)	Yes.	
63.8(c)(1)(ii)	No	For subpart G, submit as part of periodic report required by § 63.152(c); for subpart H, retain as required by § 63.181(g)(2)(ii).
63.8(c)(1)(iii)	Yes.	
63.8(c)(2)	Yes.	
63.8(c)(3)	Yes.	
63.8(c)(4)	No	Subpart G specifies monitoring frequency by kind of emission point and control technology used (e.g., § 63.111, § 63.120(d)(2), § 63.143, and § 63.152(f)); subpart H does not require use of continuous monitoring systems.
63.8 (c)(5)–(c)(8)	No.	
63.8(d)	No.	
63.8(e)	No.	
63.8 (f)(1)–(f)(3)	Yes.	
63.8(f)(4)(i)	No	Timeframe for submitting request specified in § 63.151(f) or (g) of subpart G; not applicable to subpart H because subpart H specifies acceptable alternative methods.

TABLE 3.—GENERAL PROVISIONS APPLICABILITY TO SUBPARTS F, G, AND H[a]—Continued

Reference	Applies to subparts F, G, and H	Comment
63.8(f)(4)(ii)	Yes.	
63.8(f)(4)(iii)	No.	
63.8(f)(5)(i)	Yes.	
63.8(f)(5)(ii)	No.	
63.8(f)(5)(iii)	Yes.	
63.8(f)(6)	No	Subparts G and H do not require continuous emission monitoring.
63.8(g)	No	Data reduction procedures specified in § 63.152(f) and (g) of subpart G; not applicable to subpart H.
63.9(a)	Yes.	
63.9(b)(1)	No	Specified in § 63.151(b)(2) of subpart G; specified in § 63.182(b) of subpart H.
63.9(b)(2)	No	Initial Notification provisions are specified in § 63.151(b) of subpart G; in § 63.182(b) of subpart H.
63.9(b)(3)	No.	
63.9(b)(4)	Yes	Except that the notification in § 63.9(b)(4)(i) shall be submitted at the time specified in § 63.151(b)(2)(ii) of subpart G; in § 63.182(b)(2) of subpart H.
63.9(b)(5)	Yes	Except that the notification in § 63.9(b)(5) shall be submitted at the time specified in § 63.151(b)(2)(ii) of subpart G; in § 63.182 (b)(2) of subpart H.
63.9(c)	Yes.	
63.9(d)	Yes.	
63.9(e)	No.	
63.9(f)	No.	
63.9(g)	No.	
63.9(h)	No	§ 63.152(b) of subpart G and § 63.182 (c) of subpart H specify Notification of Compliance Status requirements.
63.9(i)	Yes.	
63.9(j)	No.	
63.10(a)	Yes.	
63.10(b)(1)	No	§ 63.103(c) of subpart F specifies record retention requirements.
63.10(b)(2)	No	§ 63.103(c) of subpart F specifies required records.
63.10(b)(3)	No.	
63.10(c)	No.	
63.10(d)(1)	No.	
63.10(d)(2)	No	§ 63.152(b) of subpart G specifies performance test reporting; not applicable to subpart H.
63.10(d)(3)	No.	
63.10(d)(4)	Yes.	
63.10(d)(5)	Yes	Except that reports required by § 63.10(d)(5) shall be submitted at the time specified in § 63.152(d) of subpart G and in § 63.182(d) of subpart H.
63.10(e)	No.	
63.10(f)	Yes.	
63.11–63.15	Yes.	

[a] Wherever subpart A specifies ''postmark'' dates, submittals may be sent by methods other than the U.S. Mail (e.g., by fax or courier). Submittals shall be sent by the specified dates, but a postmark is not necessarily required.

[b] The plan, and any records or reports of start-up, shutdown, and malfunction do not apply to Group 2 emission points unless they are included in an emissions average.

TABLE 4. TO SUBPART F.—ORGANIC HAZARDOUS AIR POLLUTANTS SUBJECT TO COOLING TOWER MONITORING REQUIREMENTS IN § 63.104

Chemical name	CAS Number[a]
Acetaldehyde	75070
Acetonitrile	75058
Acetophenone	98862
Acrolein	107028
Acrylonitrile	107131
Allyl chloride	107051
Aniline	62533
Anisidine (o-)	90040
Benzene	71432
Benzyl chloride	100447
Biphenyl	92524
Bromoform	75252
Butadiene (1,3-)	106990
Carbon disulfide	75150

TABLE 4. TO SUBPART F.—ORGANIC HAZARDOUS AIR POLLUTANTS SUBJECT TO COOLING TOWER MONITORING REQUIREMENTS IN § 63.104—Continued

Chemical name	CAS Number [a]
Carbon tetrachloride	56235
Chloroacetophenone (2-)	532274
Chlorobenzene	108907
2–Chloro-1,3-butadiene (Chloroprene)	126998
Chloroform	67663
Cresol and cresylic acid (o-)	95487
Cresol and cresylic acid (m-)	108394
Cresol and cresylic acid (p-)	106445
Cumene	98828
Dichlorobenzene (p-)	106467
Dichlorobenzidine (3,3′-)	91941
Dichloroethane (1,2-) (Ethylene dichloride) (EDC)	107062
Dichloroethyl ether (Bis(2-chloroethyl)ether)	111444
Dichloropropene (1,3-)	542756
Diethylene glycol diethyl ether	112367
Diethylene glycol dimethyl ether	111966
Diethyl sulfate	64675
Dimethylaniline (N,N-)	121697
Dimethylhydrazine (1,1-)	57147
Dimethyl phthalate	131113
Dimethyl sulfate	77781
Dinitrophenol (2,4-)	51285
Dinitrotoluene (2,4-)	121142
Dioxane (1,4-) (1,4-Diethyleneoxide)	123911
Epichlorohydrin (1-Chloro-2,3-epoxypropane)	106898
Ethyl acrylate	140885
Ethylbenzene	100414
Ethyl chloride (Chloroethane)	75003
Ethylene dibromide (Dibromoethane)	106934
Ethylene glycol dimethyl ether	110714
Ethylene glycol monobutyl ether	111762
Ethylene glycol monobutyl ether acetate	112072
Ethylene glycol monoethyl ether acetate	111159
Ethylene glycol monoethyl ether	110805
Ethylene glycol monomethyl ether	109864
Ethylene glycol monomethyl ether acetate	110496
Ethylene glycol monopropyl ether	2807309
Ethylene oxide	75218
Ethylidene dichloride (1,1-Dichloroethane)	75343
Formaldehyde	50000
Hexachlorobenzene	118741
Hexachlorobutadiene	87683
Hexachloroethane	67721
Hexane	110543
Isophorone	78591
Methanol	67561
Methyl bromide (Bromomethane)	74839
Methyl chloride (Chloromethane)	74873
Methyl ethyl ketone (2–Butanone)	78933
Methyl hydrazine	60344
Methyl isobutyl ketone (Hexone)	108101
Methyl methacrylate	80626
Methyl tert-butyl ether	1634044
Methylene chloride (Dichloromethane)	75092
Methylenedianiline (4,4′-)	101779
Naphthalene	91203
Nitrobenzene	98953
Nitropropane (2-)	79469
Phenol	108952
Phenylenediamine (p-)	106503
Phosgene	75445
Propionaldehyde	123386
Propylene dichloride (1,2-Dichloropropane)	78875
Propylene oxide	75569
Quinone	106514
Styrene	100425
Tetrachloroethane (1,1,2,2-)	79345
Tetrachloroethylene (Perchloroethylene)	127184
Toluene	108883
Toluidine (o-)	95534

TABLE 4. TO SUBPART F.—ORGANIC HAZARDOUS AIR POLLUTANTS SUBJECT TO COOLING TOWER MONITORING REQUIREMENTS IN § 63.104—Continued

Chemical name	CAS Number [a]
Trichlorobenzene (1,2,4-)	120821
Trichloroethane (1,1,1-) (Methyl chloroform)	71556
Trichloroethane (1,1,2-) (Vinyl trichloride)	79005
Trichloroethylene	79016
Trichlorophenol (2,4,5-)	95954
Triethylamine	121448
Trimethylpentane (2,2,4-)	540841
Vinyl acetate	108054
Vinyl chloride (chloroethylene)	75014
Vinylidene chloride (1,1-Dichloroethylene)	75354
Xylene (m-)	108383
Xylene (o-)	95476
Xylene (p-)	106423

[a] CAS Number=Chemical Abstract Service number.

Subpart G—National Emission Standards for Organic Hazardous Air Pollutants From the Synthetic Organic Chemical Manufacturing Industry for Process Vents, Storage Vessels, Transfer Operations, and Wastewater

8. Section 63.110 is amended by adding paragraphs (d)(10) and (h) and by revising paragraph (e)(1) to read as follows:

§ 63.110 Applicability.

* * * * *

(d) * * *

(10) As an alternative to the requirements of paragraphs (d)(2), (d)(3), (d)(5), (d)(6), (d)(8), and/or (d)(9) of this section as applicable, if a chemical manufacturing process unit has equipment subject to the provisions of this subpart and equipment subject to the provisions of 40 CFR part 60, subpart III, NNN, or RRR, the owner or operator may elect to apply this subpart to all such equipment in the chemical manufacturing process unit. If the owner or operator elects this method of compliance, all total organic compounds minus methane and ethane, in such equipment shall be considered for purposes of applicability and compliance with this subpart, as if they were organic hazardous air pollutants. Compliance with the provisions of this subpart, in the manner described in this paragraph, shall be deemed to constitute compliance with 40 CFR part 60, subpart III, NNN, or RRR, as applicable.

(e) * * *

(1) After the compliance dates specified in § 63.100 of subpart F of this part, the owner or operator of a Group 1 or Group 2 wastewater stream that is also subject to the provisions of 40 CFR part 61, subpart FF is required to comply with the provisions of both this subpart and 40 CFR part 61, subpart FF. Alternatively, the owner or operator may elect to comply with the provisions of paragraphs (e)(1)(i) and (e)(1)(ii) of this section, which shall constitute compliance with the provisions of 40 CFR part 61, subpart FF.

(i) Comply with the provisions of this subpart; and

(ii) For any Group 2 wastewater stream or organic stream whose benzene emissions are subject to control through the use of one or more treatment processes or waste management units under the provisions of 40 CFR part 61, subpart FF on or after December 31, 1992, comply with the requirements of this subpart for Group 1 wastewater streams.

* * * * *

(h) *Overlap with other regulations for monitoring, recordkeeping, or reporting with respect to combustion devices, recovery devices, or recapture devices.* After the compliance dates specified in § 63.100 of subpart F of this part, if any combustion device, recovery device, or recapture device subject to this subpart is also subject to monitoring, recordkeeping, and reporting requirements in 40 CFR part 264, subpart AA or CC, or is subject to monitoring and recordkeeping requirements in 40 CFR part 265, subpart AA or CC and the owner or operator complies with the periodic reporting requirements under 40 CFR part 264, subpart AA or CC that would apply to the device if the facility had final-permitted status, the owner or operator may elect to comply either with the monitoring, recordkeeping, and reporting requirements of this subpart, or with the monitoring, recordkeeping, and reporting requirements in 40 CFR parts 264 and/or 265, as described in this paragraph, which shall constitute compliance with the monitoring, recordkeeping, and reporting requirements of this subpart. The owner or operator shall identify which option has been selected in the Notification of Compliance Status required by § 63.152(b).

9. Section 63.111 is amended by redesignating ''average concentration'' as ''annual average concentration'' and ''average flow rate'' as ''annual average flow rate''; revising the definition for ''boiler''; adding the definition for ''chemical manufacturing process unit''; adding the definition for ''closed biological treatment process''; revising the definitions for ''closed vent system,'' ''combustion device,'' ''continuous record,'' ''continuous seal,'' ''control device,'' and ''cover''; adding the definition for ''enhanced biological treatment system or enhanced biological treatment process''; revising the definitions for ''flame zone'' and ''flow indicator''; adding the definitions for ''fuel gas'' and ''fuel gas system''; revising the definitions for ''Group 1 wastewater stream,'' ''individual drain system,'' and ''junction box''; removing the definition for ''mass flow rate''; revising the definition for ''metallic shoe seal or mechanical shoe seal''; adding the definition for ''open biological treatment process''; removing the definition for ''point of generation''; adding the definition for ''point of determination''; revising the definition for ''process unit,'' adding the definition for ''recapture device''; revising the definitions for ''recovery device,'' ''reference control technology for process vents,'' ''reference control technology for transfer racks,'' ''reference control technology for wastewater'' and ''residual''; revising the definition for ''specific gravity monitoring device''; adding the definitions for ''Table 8 compound'' and ''Table 9 compound''; revising the definition for ''temperature monitoring

device''; removing the definitions for ''total volatile organic hazardous air pollutant concentration,'' ''volatile organic concentration or VO concentration,'' and ''volatile organic hazardous air pollutant concentration or VOHAP concentration''; and revising the definition of ''waste management unit'' to read as follows:

§ 63.111 Definitions.

* * * * *

Annual average concentration * * *

Annual average flow rate * * *

Boiler means any enclosed combustion device that extracts useful energy in the form of steam and is not an incinerator. Boiler also means any industrial furnace as defined in 40 CFR 260.10.

* * * * *

Chemical manufacturing process unit means the equipment assembled and connected by pipes or ducts to process raw materials and to manufacture an intended product. A chemical manufacturing process unit consists of more than one unit operation. For the purpose of this subpart, chemical manufacturing process unit includes air oxidation reactors and their associated product separators and recovery devices; reactors and their associated product separators and recovery devices; distillation units and their associated distillate receivers and recovery devices; associated unit operations; associated recovery devices; and any feed, intermediate and product storage vessels, product transfer racks, and connected ducts and piping. A chemical manufacturing process unit includes pumps, compressors, agitators, pressure relief devices, sampling connection systems, open-ended valves or lines, valves, connectors, instrumentation systems, and control devices or systems. A chemical manufacturing process unit is identified by its primary product.

Closed biological treatment process means a tank or surface impoundment where biological treatment occurs and air emissions from the treatment process are routed to either a control device by means of a closed vent system or to a fuel gas system by means of hard-piping. The tank or surface impoundment has a fixed roof, as defined in § 63.111 of this subpart, or a floating flexible membrane cover that meets the requirements specified in § 63.134 of this subpart.

Closed-vent system means a system that is not open to the atmosphere and is composed of piping, ductwork, connections, and, if necessary, flow inducing devices that transport gas or vapor from an emission point to a control device.

Combustion device means an individual unit of equipment, such as a flare, incinerator, process heater, or boiler, used for the combustion of organic hazardous air pollutant emissions.

* * * * *

Continuous record means documentation, either in hard copy or computer readable form, of data values measured at least once every 15 minutes and recorded at the frequency specified in § 63.152(f) or § 63.152(g) of this subpart.

* * * * *

Continuous seal means a seal that forms a continuous closure that completely covers the space between the wall of the storage vessel and the edge of the floating roof. A continuous seal may be a vapor-mounted, liquid-mounted, or metallic shoe seal. A continuous seal may be constructed of fastened segments so as to form a continuous seal.

* * * * *

Control device means any combustion device, recovery device, or recapture device. Such equipment includes, but is not limited to, absorbers, carbon adsorbers, condensers, incinerators, flares, boilers, and process heaters. For process vents, recapture devices are considered control devices but recovery devices are not considered control devices, and for a steam stripper, a primary condenser is not considered a control device.

Cover, as used in the wastewater provisions, means a device or system which is placed on or over a waste management unit containing wastewater or residuals so that the entire surface area is enclosed to minimize air emissions. A cover may have openings necessary for operation, inspection, and maintenance of the waste management unit such as access hatches, sampling ports, and gauge wells provided that each opening is closed when not in use. Examples of covers include a fixed roof installed on a wastewater tank, a lid installed on a container, and an air-supported enclosure installed over a waste management unit.

* * * * *

Enhanced biological treatment system or enhanced biological treatment process means an aerated treatment unit(s) that contains biomass suspended in water followed by a clarifier that removes biomass from the treated water and recycles recovered biomass to the aeration unit. The mixed liquor volatile suspended solids (biomass) is greater than 1 kilogram per cubic meter homogeneously distributed throughout each aeration unit. The biomass is suspended and aerated in the water of the aeration unit(s) by either submerged air flow or mechanical agitation.

* * * * *

Flame zone means the portion of the combustion chamber in a boiler or process heater occupied by the flame envelope.

* * * * *

Flow indicator means a device which indicates whether gas flow is, or whether the valve position would allow gas flow to be, present in a line.

Fuel gas means gases that are combusted to derive useful work or heat.

Fuel gas system means the offsite and onsite piping and control system that gathers gaseous stream(s) generated by onsite operations, may blend them with other sources of gas, and transports the gaseous stream for use as fuel gas in combustion devices, or in-process combustion equipment such as furnaces and gas turbines, either singly or in combination.

* * * * *

Group 1 wastewater stream means a wastewater stream consisting of process wastewater as defined in § 63.101 of subpart F at an existing or new source that meets the criteria for Group 1 status in § 63.132(c) of this subpart for Table 9 compounds and/or a wastewater stream consisting of process wastewater at a new source that meets the criteria for Group 1 status in § 63.132(d) of this subpart for Table 8 compounds.

* * * * *

Individual drain system means the stationary system used to convey wastewater streams or residuals to a waste management unit or to discharge or disposal. The term includes hard-piping, all process drains and junction boxes, together with their associated sewer lines and other junction boxes, manholes, sumps, and lift stations, conveying wastewater streams or residuals. A segregated stormwater sewer system, which is a drain and collection system designed and operated for the sole purpose of collecting rainfall runoff at a facility, and which is segregated from all other individual drain systems, is excluded from this definition.

* * * * *

Junction box means a manhole or access point to a wastewater sewer line or a lift station.

* * * * *

Metallic shoe seal or *mechanical shoe seal* means metal sheets that are held vertically against the wall of the storage

vessel by springs, weighted levers, or other mechanisms and connected to the floating roof by braces or other means. A flexible coated fabric (envelope) spans the annular space between the metal sheet and the floating roof.

* * * * *

Open biological treatment process means a biological treatment process that is not a closed biological treatment process as defined in this section.

* * * * *

Point of determination means each point where process wastewater exits the chemical manufacturing process unit.

Note to definition for point of determination: The regulation allows determination of the characteristics of a wastewater stream (1) at the point of determination or (2) downstream of the point of determination if corrections are made for changes in flow rate and annual average concentration of Table 8 or Table 9 compounds as determined in § 63.144 of this subpart. Such changes include losses by air emissions; reduction of annual average concentration or changes in flow rate by mixing with other water or wastewater streams; and reduction in flow rate or annual average concentration by treating or otherwise handling the wastewater stream to remove or destroy hazardous air pollutants.

* * * * *

Process unit has the same meaning as *chemical manufacturing process unit* as defined in this section.

* * * * *

Recapture device means an individual unit of equipment capable of and used for the purpose of recovering chemicals, but not normally for use, reuse, or sale. For example, a recapture device may recover chemicals primarily for disposal. Recapture devices include, but are not limited to, absorbers, carbon adsorbers, and condensers.

Recovery device means an individual unit of equipment capable of and normally used for the purpose of recovering chemicals for fuel value (i.e., net positive heating value), use, reuse or for sale for fuel value, use, or reuse. Examples of equipment that may be recovery devices include absorbers, carbon adsorbers, condensers, oil-water separators or organic-water separators, or organic removal devices such as decanters, strippers, or thin-film evaporation units. For purposes of the monitoring, recordkeeping, and reporting requirements of this subpart, recapture devices are considered recovery devices.

* * * * *

Reference control technology for process vents means a combustion device or recapture device used to reduce organic hazardous air pollutant emissions by 98 percent, or to an outlet concentration of 20 parts per million by volume.

* * * * *

Reference control technology for transfer racks means a combustion device, recapture device, or recovery device used to reduce organic hazardous air pollutants emissions by 98 percent, or to an outlet concentration of 20 parts per million by volume; or a vapor balancing system.

Reference control technology for wastewater means the use of:

(1) Controls specified in § 63.133 through § 63.137;

(2) A steam stripper meeting the specifications of § 63.138(d) of this subpart or any of the other alternative control measures specified in § 63.138(b), (c), (e), (f), (g), or (h) of this subpart; and

(3) A control device to reduce by 95 percent (or to an outlet concentration of 20 parts per million by volume for combustion devices or for noncombustion devices controlling air emissions from waste management units other than surface impoundments or containers) the organic hazardous air pollutants emissions in the vapor streams vented from wastewater tanks, oil-water separators, containers, surface impoundments, individual drain systems, and treatment processes (including the design steam stripper) managing wastewater.

Residual means any liquid or solid material containing Table 9 compounds that is removed from a wastewater stream by a waste management unit or treatment process that does not destroy organics (nondestructive unit). Examples of residuals from nondestructive wastewater management units are: the organic layer and bottom residue removed by a decanter or organic-water separator and the overheads from a steam stripper or air stripper. Examples of materials which are not residuals are: silt; mud; leaves; bottoms from a steam stripper or air stripper; and sludges, ash, or other materials removed from wastewater being treated by destructive devices such as biological treatment units and incinerators.

* * * * *

Specific gravity monitoring device means a unit of equipment used to monitor specific gravity and having a minimum accuracy of ± 0.02 specific gravity units.

* * * * *

Table 8 compound means a compound listed in table 8 of this subpart.

Table 9 compound means a compound listed in table 9 of this subpart.

Temperature monitoring device means a unit of equipment used to monitor temperature and having a minimum accuracy of (a) ±1 percent of the temperature being monitored expressed in degrees Celsius (°C) or (b) ±0.5 degrees (°C), whichever is greater.

* * * * *

Waste management unit means the equipment, structure(s), and/or device(s) used to convey, store, treat, or dispose of wastewater streams or residuals. Examples of waste management units include: Wastewater tanks, surface impoundments, individual drain systems, and biological wastewater treatment units. Examples of equipment that may be waste management units include containers, air flotation units, oil-water separators or organic-water separators, or organic removal devices such as decanters, strippers, or thin-film evaporation units. If such equipment is used for recovery, then it is part of a chemical manufacturing process unit and is not a waste management unit.

* * * * *

10. Section 63.112 is amended by revising the introductory text of paragraph (e) and adding paragraphs (e)(3) and (h) to read as follows:

§ 63.112 Emission standard.

* * * * *

(e) The owner or operator of an existing or new source may comply with the process vent provisions in §§ 63.113 through 63.118 of this subpart, the storage vessel provisions in §§ 63.119 through 63.123 of this subpart, the transfer operation provisions in §§ 63.126 through 63.130 of this subpart, the wastewater provisions in §§ 63.131 through 63.147 of this subpart, the leak inspection provisions in § 63.148, and the provisions in § 63.149 of this subpart.

* * * * *

(3) When emissions of different kinds (e.g., emissions from process vents, transfer operations, storage vessels, process wastewater, and/or in-process equipment subject to § 63.149 of this subpart) are combined, and at least one of the emission streams would be classified as Group 1 in the absence of combination with other emission streams, the owner or operator shall comply with the requirements of either paragraph (e)(3)(i) or paragraph (e)(3)(ii) of this section.

(i) Comply with the applicable requirements of this subpart for each kind of emissions in the stream (e.g., the

requirements in §§ 63.113 through 63.118 of this subpart G for process vents, and the requirements of §§ 63.126 through 63.130 for transfer operations); or

(ii) Comply with the first set of requirements identified in paragraphs (e)(3)(ii)(A) through (e)(3)(ii)(E) of this section which applies to any individual emission stream that is included in the combined stream, where either that emission stream would be classified as Group 1 in the absence of combination with other emission streams, or the owner chooses to consider that emission stream to be Group 1 for purposes of this paragraph. Compliance with the first applicable set of requirements identified in paragraphs (e)(3)(ii)(A) through (e)(3)(ii)(E) of this section constitutes compliance with all other requirements in paragraphs (e)(3)(ii)(A) through (e)(3)(ii)(E) of this section applicable to other types of emissions in the combined stream.

(A) The requirements of this subpart for Group 1 process vents, including applicable monitoring, recordkeeping, and reporting;

(B) The requirements of this subpart for Group 1 transfer racks, including applicable monitoring, recordkeeping, and reporting;

(C) The requirements of § 63.119(e) for control of emissions from Group 1 storage vessels, including monitoring, recordkeeping, and reporting;

(D) The requirements of § 63.139 for control devices used to control emissions from waste management units, including applicable monitoring, recordkeeping, and reporting; or

(E) The requirements of § 63.139 for closed vent systems for control of emissions from in-process equipment subject to § 63.149, including applicable monitoring, recordkeeping, and reporting.

* * * * *

(h) Where the provisions of this subpart require a performance test, waiver of that requirement shall be addressed only as provided in § 63.103(b)(5) of subpart F of this part.

11. Section 63.113 is amended by revising the introductory text of paragraph (a); revising paragraph (a)(2); revising the second sentence in paragraph (a)(3); and revising paragraphs (c)(1) and (c)(2) to read as follows:

§ 63.113 Process vent provisions.

(a) The owner or operator of a Group 1 process vent as defined in this subpart shall comply with the requirements of paragraph (a)(1), (a)(2), or (a)(3) of this section.

* * * * *

(2) Reduce emissions of total organic hazardous air pollutants by 98 weight-percent or to a concentration of 20 parts per million by volume, whichever is less stringent. For combustion devices, the emission reduction or concentration shall be calculated on a dry basis, corrected to 3-percent oxygen, and compliance can be determined by measuring either organic hazardous air pollutants or total organic carbon using the procedures in § 63.116 of this subpart.

(i) Compliance with paragraph (a)(2) of this section may be achieved by using any combination of combustion, recovery, and/or recapture devices, except that a recovery device may not be used to comply with paragraph (a)(2) of this section by reducing emissions of total organic hazardous air pollutants by 98 weight-percent, except as provided in paragraph (a)(2)(ii) of this section.

(ii) An owner or operator may use a recovery device, alone or in combination with one or more combustion or recapture devices, to reduce emissions of total organic hazardous air pollutants by 98 weight-percent if all the conditions of paragraphs (a)(2)(ii)(A) through (a)(2)(ii)(D) of this section are met.

(A) The recovery device (and any combustion device or recapture device which operates in combination with the recovery device to reduce emissions of total organic hazardous air pollutants by 98 weight-percent) was installed before the date of proposal of the subpart of this part 63 that makes this subpart G applicable to process vents in the chemical manufacturing process unit.

(B) The recovery device that will be used to reduce emissions of total organic hazardous air pollutants by 98 weight-percent is the last recovery device before emission to the atmosphere.

(C) The recovery device, alone or in combination with one or more combustion or recapture devices, is capable of reducing emissions of total organic hazardous air pollutants by 98 weight-percent, but is not capable of reliably reducing emissions of total organic hazardous air pollutants to a concentration of 20 parts per million by volume.

(D) If the owner or operator disposed of the recovered material, the recovery device would comply with the requirements of this subpart for recapture devices.

(3) * * * If the TRE index value is greater than 1.0, the vent shall comply with the provisions for a Group 2 process vent specified in either paragraph (d) or (e) of this section, whichever is applicable.

* * * * *

(c) * * *

(1) If a combustion device is used to comply with paragraph (a)(2) of this section for a halogenated vent stream, then the vent stream exiting the combustion device shall be ducted to a halogen reduction device, including but not limited to a scrubber, before it is discharged to the atmosphere.

(i) Except as provided in paragraph (c)(1)(ii) of this section, the halogen reduction device shall reduce overall emissions of hydrogen halides and halogens, as defined in § 63.111 of this subpart, by 99 percent or shall reduce the outlet mass of total hydrogen halides and halogens to less than 0.45 kilogram per hour, whichever is less stringent.

(ii) If a scrubber or other halogen reduction device was installed prior to December 31, 1992, the device shall reduce overall emissions of hydrogen halides and halogens, as defined in § 63.111 of this subpart, by 95 percent or shall reduce the outlet mass of total hydrogen halides and halogens to less than 0.45 kilograms per hour, whichever is less stringent.

(2) A halogen reduction device, such as a scrubber or other technique, may be used to reduce the vent stream halogen atom mass emission rate to less than 0.45 kilogram per hour prior to any combustion control device, and thus make the vent stream nonhalogenated; the vent stream must comply with the requirements of paragraph (a)(1) or (a)(2) of this section.

* * * * *

12. Section 63.114 is amended by revising the introductory text of paragraph (a); revising paragraph (a)(4)(ii); adding paragraph (a)(5); revising the introductory text of paragraph (b); revising paragraphs (b)(3), (c)(1), (c)(3), revising the first sentence of paragraph (d)(1), and revising paragraph (d)(2); and adding a sentence to the end of paragraph (e) to read as follows:

§ 63.114 Process vent provisions—monitoring requirements.

(a) Each owner or operator of a process vent that uses a combustion device to comply with the requirements in § 63.113 (a)(1) or (a)(2) of this subpart, or that uses a recovery device or recapture device to comply with the requirements in § 63.113(a)(2) of this subpart, shall install monitoring equipment specified in paragraph (a)(1), (a)(2), (a)(3), (a)(4), or (a)(5) of this section, depending on the type of device used. All monitoring equipment shall be installed, calibrated, maintained, and

operated according to manufacturer's specifications or other written procedures that provide adequate assurance that the equipment would reasonably be expected to monitor accurately.

* * * * *

(4) * * *

(ii) A flow meter equipped with a continuous recorder shall be located at the scrubber influent for liquid flow. Gas stream flow shall be determined using one of the procedures specified in paragraphs (a)(4)(ii)(A) through (a)(4)(ii)(C) of this section.

(A) The owner or operator may determine gas stream flow using the design blower capacity, with appropriate adjustments for pressure drop.

(B) If the scrubber is subject to regulations in 40 CFR parts 264 through 266 that have required a determination of the liquid to gas (L/G) ratio prior to the applicable compliance date for this subpart specified in § 63.100(k) of subpart F of this part, the owner or operator may determine gas stream flow by the method that had been utilized to comply with those regulations. A determination that was conducted prior to the compliance date for this subpart may be utilized to comply with this subpart if it is still representative.

(C) The owner or operator may prepare and implement a gas stream flow determination plan that documents an appropriate method which will be used to determine the gas stream flow. The plan shall require determination of gas stream flow by a method which will at least provide a value for either a representative or the highest gas stream flow anticipated in the scrubber during representative operating conditions other than start-ups, shutdowns, or malfunctions. The plan shall include a description of the methodology to be followed and an explanation of how the selected methodology will reliably determine the gas stream flow, and a description of the records that will be maintained to document the determination of gas stream flow. The owner or operator shall maintain the plan as specified in § 63.103(c).

(5) Where a recovery device or recapture device is used to comply with the requirements of § 63.113(a)(2) of this subpart, the owner or operator shall utilize the appropriate monitoring device identified in paragraph (b), (b)(1), (b)(2), or (b)(3) of this section.

(b) Each owner or operator of a process vent with a TRE index value greater than 1.0 as specified under § 63.113(a)(3) or §63.113(d) of this subpart that uses one or more recovery devices shall install either an organic monitoring device equipped with a continuous recorder or the monitoring equipment specified in paragraph (b)(1), (b)(2), or (b)(3) of this section, depending on the type of recovery device used. All monitoring equipment shall be installed, calibrated, and maintained according to the manufacturer's specifications or other written procedures that provide adequate assurance that the equipment would reasonably be expected to monitor accurately. Monitoring is not required for process vents with TRE index values greater than 4.0 as specified in § 63.113(e) of this subpart.

* * * * *

(3) Where a carbon adsorber is the final recovery device in the recovery system, an integrating regeneration stream flow monitoring device having an accuracy of ±10 percent or better, capable of recording the total regeneration stream mass or volumetric flow for each regeneration cycle; and a carbon bed temperature monitoring device, capable of recording the carbon bed temperature after each regeneration and within 15 minutes of completing any cooling cycle shall be used.

(c) * * *

(1) Uses a combustion device other than an incinerator, boiler, process heater, or flare; or

* * * * *

(3) Uses one of the combustion or recovery or recapture devices listed in paragraphs (a) and (b) of this section, but seeks to monitor a parameter other than those specified in paragraphs (a) and (b) of this section.

(d) * * *

(1) Properly install, maintain, and operate a flow indicator that takes a reading at least once every 15 minutes. * * *

(2) Secure the bypass line valve in the non-diverting position with a car-seal or a lock-and-key type configuration. A visual inspection of the seal or closure mechanism shall be performed at least once every month to ensure that the valve is maintained in the non-diverting position and the vent stream is not diverted through the bypass line.

(e) * * * The range may be based upon a prior performance test conducted for determining compliance with a regulation promulgated by the EPA, and the owner or operator is not required to conduct a performance test under § 63.116 of this subpart, if the prior performance test was conducted using the same methods specified in § 63.116 and either no process changes have been made since the test, or the owner or operator can demonstrate that the results of the performance test, with or without adjustments, reliably demonstrate compliance despite process changes.

13. Section 63.115 is amended by revising the introductory text of paragraph (a) and the first sentence in the introductory text of paragraph (e) to read as follows:

§ 63.115 Process vent provisions—methods and procedures for process vent group determination.

(a) For purposes of determining process vent stream flow rate, total organic hazardous air pollutants or total organic carbon concentration or TRE index value, as specified under paragraph (b), (c), or (d) of this section, the sampling site shall be after the last recovery device (if any recovery devices are present) but prior to the inlet of any control device that is present and prior to release to the atmosphere.

* * * * *

(e) The owner or operator of a Group 2 process vent shall recalculate the TRE index value, flow, or organic hazardous air pollutants concentration for each process vent, as necessary to determine whether the vent is Group 1 or Group 2, whenever process changes are made that could reasonably be expected to change the vent to a Group 1 vent.

* * * * *

14. Section 63.116 is amended by revising paragraph (a)(1); by revising the introductory text of paragraph (b); revising paragraph (b)(3); adding paragraph (b)(5); revising the introductory text of paragraph (d); and revising paragraphs (d)(1), (d)(3), (d)(4), and (e) to read as follows:

§ 63.116 Process vent provisions—performance test methods and procedures to determine compliance.

(a) * * *

(1) The compliance determination shall be conducted using Method 22 of 40 CFR part 60, appendix A, to determine visible emissions.

* * * * *

(b) An owner or operator is not required to conduct a performance test when any control device specified in paragraphs (b)(1) through (b)(5) of this section is used.

* * * * *

(3) A control device for which a performance test was conducted for determining compliance with a regulation promulgated by the EPA and the test was conducted using the same methods specified in this section and either no process changes have been made since the test, or the owner or operator can demonstrate that the results of the performance test, with or

without adjustments, reliably demonstrate compliance despite process changes.

* * * * *

(5) A hazardous waste incinerator for which the owner or operator has been issued a final permit under 40 CFR part 270 and complies with the requirements of 40 CFR part 264, subpart O, or has certified compliance with the interim status requirements of 40 CFR part 265, subpart O.

* * * * *

(d) An owner or operator using a combustion device followed by a scrubber or other halogen reduction device to control halogenated process vent streams in compliance with § 63.113(c)(1) shall conduct a performance test to determine compliance with the control efficiency or emission limits for hydrogen halides and halogens.

(1) For an owner or operator determining compliance with the percent reduction of total hydrogen halides and halogens, sampling sites shall be located at the inlet and outlet of the scrubber or other halogen reduction device used to reduce halogen emissions. For an owner or operator determining compliance with the less than 0.45 kilogram per hour outlet emission limit for total hydrogen halides and halogens, the sampling site shall be located at the outlet of the scrubber or other halogen reduction device and prior to any releases to the atmosphere.

* * * * *

(3) To determine compliance with the percent removal efficiency, the mass emissions for any hydrogen halides and halogens present at the inlet of the scrubber or other halogen reduction device shall be summed together. The mass emissions of the compounds present at the outlet of the scrubber or other halogen reduction device shall be summed together. Percent reduction shall be determined by comparison of the summed inlet and outlet measurements.

(4) To demonstrate compliance with the less than 0.45 kilogram per hour outlet emission limit, the test results must show that the mass emission rate of total hydrogen halides and halogens measured at the outlet of the scrubber or other halogen reduction device is below 0.45 kilogram per hour.

* * * * *

(e) An owner or operator using a scrubber or other halogen reduction device to reduce the vent stream halogen atom mass emission rate to less than 0.45 kilogram per hour prior to a combustion control device in compliance with § 63.113(c)(2) of this subpart shall determine the halogen atom mass emission rate prior to the combustor according to the procedures in § 63.115(d)(2)(v) of this subpart.

15. Section 63.118 is amended by revising paragraph (a)(2); revising the introductory text of paragraph (b); and revising paragraph (b)(2) to read as follows:

§ 63.118 Process vents provisions—Periodic reporting and recordkeeping requirements.

(a) * * *

(2) Records of the daily average value of each continuously monitored parameter for each operating day determined according to the procedures specified in § 63.152(f). For flares, records of the times and duration of all periods during which all pilot flames are absent shall be kept rather than daily averages.

* * * * *

(b) Each owner or operator using a recovery device or other means to achieve and maintain a TRE index value greater than 1.0 but less than 4.0 as specified in § 63.113(a)(3) or § 63.113(d) of this subpart shall keep the following records up-to-date and readily accessible:

* * * * *

(2) Records of the daily average value of each continuously monitored parameter for each operating day determined according to the procedures specified in § 63.152(f). If carbon adsorber regeneration stream flow and carbon bed regeneration temperature are monitored, the records specified in table 4 of this subpart shall be kept instead of the daily averages.

* * * * *

16. Section 63.119 is amended by revising paragraphs (a)(1), (a)(2), (b)(2), and (c)(4); and by adding new paragraphs (e)(6) and (f) to read as follows:

§ 63.119 Storage vessel provisions—reference control technology.

(a) * * *

(1) For each Group 1 storage vessel (as defined in table 5 of this subpart for existing sources and table 6 for new sources) storing a liquid for which the maximum true vapor pressure of the total organic hazardous air pollutants in the liquid is less than 76.6 kilopascals, the owner or operator shall reduce hazardous air pollutants emissions to the atmosphere either by operating and maintaining a fixed roof and internal floating roof, an external floating roof, an external floating roof converted to an internal floating roof, or a closed vent system and control device, or routing the emissions to a process or a fuel gas system in accordance with the requirements in paragraph (b), (c), (d), (e), or (f) of this section, or equivalent as provided in § 63.121 of this subpart.

(2) For each Group 1 storage vessel (as defined in table 5 of this subpart for existing sources and table 6 of this subpart for new sources) storing a liquid for which the maximum true vapor pressure of the total organic hazardous air pollutants in the liquid is greater than or equal to 76.6 kilopascals, the owner or operator shall operate and maintain a closed vent system and control device meeting the requirements specified in paragraph (e) of this section, or route the emissions to a process or a fuel gas system as specified in paragraph (f) of this section, or equivalent as provided in § 63.121 of this subpart.

* * * * *

(b) * * *

(2) When the floating roof is resting on the leg supports, the process of filling, emptying, or refilling shall be continuous and shall be accomplished as soon as practical.

* * * * *

(c) * * *

(4) When the floating roof is resting on the leg supports, the process of filling, emptying, or refilling shall be continuous and shall be accomplished as soon as practical.

* * * * *

(e) * * *

(6) An owner or operator may use a combination of control devices to achieve the required reduction of total organic hazardous air pollutants specified in paragraph (e)(1) of this section. An owner or operator may use a combination of control devices installed on a storage vessel on or before December 31, 1992 to achieve the required reduction of total organic hazardous air pollutants specified in paragraph (e)(2) of this section.

(f) The owner or operator who elects to route emissions to a fuel gas system or to a process, as defined in § 63.111 of this subpart, to comply with the requirements of paragraph (a)(1) or (a)(2) of this section shall comply with the requirements in paragraphs (f)(1) through (f)(3) of this section, as applicable.

(1) If emissions are routed to a fuel gas system, there is no requirement to conduct a performance test or design evaluation. If emissions are routed to a process, the organic hazardous air pollutants in the emissions shall predominantly meet one of, or a combination of, the ends specified in paragraphs (f)(1)(i) through (f)(1)(iv) of

this section. The owner or operator shall comply with the compliance demonstration requirements in § 63.120(f).

(i) Recycled and/or consumed in the same manner as a material that fulfills the same function in that process;

(ii) Transformed by chemical reaction into materials that are not organic hazardous air pollutants;

(iii) Incorporated into a product; and/or

(iv) Recovered.

(2) If the emissions are conveyed by a system other than hard-piping, any conveyance system operated under positive pressure shall be subject to the requirements of § 63.148 of this subpart.

(3) The fuel gas system or process shall be operating at all times when organic hazardous air pollutants emissions are routed to it except as provided in § 63.102(a)(1) of subpart F of this part and in paragraphs (f)(3)(i) through (f)(3)(iii) of this section. Whenever the owner or operator by-passes the fuel gas system or process, the owner or operator shall comply with the recordkeeping requirement in § 63.123(h) of this subpart. Bypassing is permitted if the owner or operator complies with one or more of the conditions specified in paragraphs (f)(3)(i) through (f)(3)(iii) of this section.

(i) The liquid level in the storage vessel is not increased;

(ii) The emissions are routed through a closed-vent system to a control device complying with § 63.119(e) of this subpart; or

(iii) The total aggregate amount of time during which the emissions by-pass the fuel gas system or process during the calendar year without being routed to a control device, for all reasons (except start-ups/shutdowns/malfunctions or product changeovers of flexible operation units and periods when the storage vessel has been emptied and degassed), does not exceed 240 hours.

17. Section 63.120 is amended by revising the last sentence of paragraph (a)(4); revising the first sentence of paragraph (b)(2)(ii); revising the last sentence of paragraphs (b)(7)(ii) and (b)(8); revising the introductory text of paragraph (d); and adding paragraphs (d)(8) and (f) to read as follows:

§ 63.120 Storage vessel provisions—procedures to determine compliance.

(a) * * *

(4) * * * Documentation of a decision to utilize an extension shall include a description of the failure, shall document that alternate storage capacity is unavailable, and shall specify a schedule of actions that will ensure that the control equipment will be repaired or the vessel will be emptied as soon as practical.

* * * * *

(b) * * *

(2) * * *

(ii) Seal gaps, if any, shall be measured around the entire circumference of the vessel in each place where an 0.32 centimeter (⅛ inch) diameter uniform probe passes freely (without forcing or binding against the seal) between the seal and the wall of the storage vessel. * * *

* * * * *

(7) * * *

(ii) * * * Documentation of a decision to utilize an extension shall include an explanation of why it was unsafe to perform the inspection or seal gap measurement, shall document that alternate storage capacity is unavailable, and shall specify a schedule of actions that will ensure that the vessel will be emptied as soon as practical.

(8) * * * Documentation of a decision to utilize an extension shall include a description of the failure, shall document that alternate storage capacity is unavailable, and shall specify a schedule of actions that will ensure that the control equipment will be repaired or the vessel will be emptied as soon as practical.

* * * * *

(d) To demonstrate compliance with § 63.119(e) of this subpart (storage vessel equipped with a closed vent system and control device) using a control device other than a flare, the owner or operator shall comply with the requirements in paragraphs (d)(1) through (d)(7) of this section, except as provided in paragraph (d)(8) of this section.

* * * * *

(8) A design evaluation or performance test is not required, if the owner or operator uses a combustion device meeting the criteria in paragraph (d)(8)(i), (d)(8)(ii), (d)(8)(iii), or (d)(8)(iv) of this section.

(i) A boiler or process heater with a design heat input capacity of 44 megawatts or greater.

(ii) A boiler or process heater burning hazardous waste for which the owner or operator:

(A) Has been issued a final permit under 40 CFR part 270 and complies with the requirements of 40 CFR part 266, subpart H, or

(B) Has certified compliance with the interim status requirements of 40 CFR part 266, subpart H.

(iii) A hazardous waste incinerator for which the owner or operator has been issued a final permit under 40 CFR part 270 and complies with the requirements of 40 CFR part 264, subpart O or has certified compliance with the interim status requirements of 40 CFR part 265, subpart O.

(iv) A boiler or process heater into which the vent stream is introduced with the primary fuel.

* * * * *

(f) To demonstrate compliance with § 63.119(f) of this subpart (storage vessel routed to a process), the owner or operator shall prepare a design evaluation (or engineering assessment) that demonstrates the extent to which one or more of the ends specified in § 63.119(f)(1)(i) through (f)(1)(iv) are being met. The owner or operator shall submit the design evaluation as part of the Notification of Compliance Status required by § 63.152(b) of this subpart.

18. Section 63.122 is amended by adding a sentence to the end of the introductory text of paragraph (c); and adding paragraph (c)(3) to read as follows:

§ 63.122 Storage vessel provisions—reporting.

* * * * *

(c) * * * An owner or operator who elects to comply with § 63.119(f) of this subpart by routing emissions to a process or to a fuel gas system shall submit, as part of the Notification of Compliance Status required by § 63.152(b) of this subpart, the information specified in paragraph (c)(3) of this section.

* * * * *

(3) If emissions are routed to a process, the owner or operator shall submit the information specified in § 63.120(f). If emissions are routed to a fuel gas system, the owner or operator shall submit a statement that the emission stream is connected to the fuel gas system and whether the conveyance system is subject to the requirements of § 63.148.

* * * * *

19. Section 63.123 is amended by adding paragraph (h) to read as follows:

§ 63.123 Storage vessel provisions—recordkeeping.

* * * * *

(h) An owner or operator who uses the by-pass provisions of § 63.119(f)(3) of this subpart shall keep in a readily accessible location the records specified in paragraphs (h)(1) through (h)(3) of this section.

(1) The reason it was necessary to by-pass the process equipment or fuel gas system;

(2) The duration of the period when the process equipment or fuel gas system was by-passed;

(3) Documentation or certification of compliance with the applicable provisions of § 63.119(f)(3)(i) through § 63.119(f)(3)(iii).

20. Section 63.126 is amended by revising paragraphs (a)(1) and (a)(3); revising the introductory text of paragraph (b), and revising paragraphs (b)(1) and (b)(3); adding paragraph (b)(4); and revising paragraphs (d)(1), (d)(2), (h), and (i) to read as follows:

§ 63.126 Transfer operations provisions—reference control technology.

(a) * * *

(1) Each vapor collection system shall be designed and operated to collect the organic hazardous air pollutants vapors displaced from tank trucks or railcars during loading, and to route the collected hazardous air pollutants vapors to a process, or to a fuel gas system, or to a control device as provided in paragraph (b) of this section.

* * * * *

(3) Whenever organic hazardous air pollutants emissions are vented to a process, fuel gas system, or control device used to comply with the provisions of this subpart, the process, fuel gas system, or control device shall be operating.

(b) For each Group 1 transfer rack the owner or operator shall comply with paragraph (b)(1), (b)(2), (b)(3), or (b)(4) of this section.

(1) Use a control device to reduce emissions of total organic hazardous air pollutants by 98 weight-percent or to an exit concentration of 20 parts per million by volume, whichever is less stringent. For combustion devices, the emission reduction or concentration shall be calculated on a dry basis, corrected to 3-percent oxygen. If a boiler or process heater is used to comply with the percent reduction requirement, then the vent stream shall be introduced into the flame zone of such a device. Compliance may be achieved by using any combination of combustion, recovery, and/or recapture devices.

* * * * *

(3) Reduce emissions of organic hazardous air pollutants using a vapor balancing system designed and operated to collect organic hazardous air pollutants vapors displaced from tank trucks or railcars during loading; and to route the collected hazardous air pollutants vapors to the storage vessel from which the liquid being loaded originated, or to another storage vessel connected to a common header, or to compress and route to a process collected hazardous air pollutants vapors.

(4) Route emissions of organic hazardous air pollutants to a fuel gas system or to a process where the organic hazardous air pollutants in the emissions shall predominantly meet one of, or a combination of, the ends specified in paragraphs (b)(4)(i) through (b)(4)(iv) of this section.

(i) Recycled and/or consumed in the same manner as a material that fulfills the same function in that process;

(ii) Transformed by chemical reaction into materials that are not organic hazardous air pollutants;

(iii) Incorporated into a product; and/or

(iv) Recovered.

* * * * *

(d) * * *

(1) If a combustion device is used to comply with paragraph (b)(1) of this section for a halogenated vent stream, then the vent stream exiting the combustion device shall be ducted to a halogen reduction device, including, but not limited to, a scrubber before it is discharged to the atmosphere.

(i) Except as provided in paragraph (d)(1)(ii) of this section, the halogen reduction device shall reduce overall emissions of hydrogen halides and halogens, as defined in § 63.111 of this subpart, by 99 percent or shall reduce the outlet mass emission rate of total hydrogen halides and halogens to 0.45 kilograms per hour or less, whichever is less stringent.

(ii) If a scrubber or other halogen reduction device was installed prior to December 31, 1992, the halogen reduction device shall reduce overall emissions of hydrogen halides and halogens, as defined in § 63.111 of this subpart, by 95 percent or shall reduce the outlet mass of total hydrogen halides and halogens to less than 0.45 kilograms per hour, whichever is less stringent.

(2) A halogen reduction device, such as a scrubber, or other technique may be used to make the vent stream non-halogenated by reducing the vent stream halogen atom mass emission rate to less than 0.45 kilograms per hour prior to any combustion control device used to comply with the requirements of paragraphs (b)(1) or (b)(2) of this section.

* * * * *

(h) The owner or operator of a transfer rack subject to the provisions of this subpart shall ensure that no pressure-relief device in the transfer rack's vapor collection system or in the organic hazardous air pollutants loading equipment of each tank truck or railcar shall begin to open during loading. Pressure relief devices needed for safety purposes are not subject to this paragraph.

(i) Each valve in the vent system that would divert the vent stream to the atmosphere, either directly or indirectly, shall be secured in a non-diverting position using a carseal or a lock-and-key type configuration, or shall be equipped with a flow indicator. Equipment such as low leg drains, high point bleeds, analyzer vents, open-ended valves or lines, and pressure relief devices needed for safety purposes is not subject to this paragraph.

21. Section 63.127 is amended by revising the introductory text of paragraph (a) and revising paragraph (a)(4)(ii); revising the introductory text of paragraph (b), revising paragraph (b)(3), and revising the first sentence of paragraph (d)(1) to read as follows:

§ 63.127 Transfer operations provisions—monitoring requirements.

(a) Each owner or operator of a Group 1 transfer rack equipped with a combustion device used to comply with the 98 percent total organic hazardous air pollutants reduction or 20 parts per million by volume outlet concentration requirements in § 63.126(b)(1) of this subpart shall install, calibrate, maintain, and operate according to the manufacturers' specifications (or other written procedures that provide adequate assurance that the equipment would reasonably be expected to monitor accurately) the monitoring equipment specified in paragraph (a)(1), (a)(2), (a)(3), or (a)(4) of this section, as appropriate.

* * * * *

(4) * * *

(ii) A flow meter equipped with a continuous recorder shall be located at the scrubber influent for liquid flow. Gas stream flow shall be determined using one of the procedures specified in paragraphs (a)(4)(ii)(A) through (a)(4)(ii)(C) of this section.

(A) The owner or operator may determine gas stream flow using the design blower capacity, with appropriate adjustments for pressure drop.

(B) If the scrubber is subject to regulations in 40 CFR parts 264 through 266 that have required a determination of the liquid to gas (L/G) ratio prior to the applicable compliance date for this subpart specified in § 63.100(k) of subpart F of this part, the owner or operator may determine gas stream flow by the method that had been utilized to comply with those regulations. A determination that was conducted prior to the compliance date for this subpart may be utilized to comply with this subpart if it is still representative.

(C) The owner or operator may prepare and implement a gas stream

flow determination plan that documents an appropriate method which will be used to determine the gas stream flow. The plan shall require determination of gas stream flow by a method which will at least provide a value for either a representative or the highest gas stream flow anticipated in the scrubber during representative operating conditions other than start-ups, shutdowns, or malfunctions. The plan shall include a description of the methodology to be followed and an explanation of how the selected methodology will reliably determine the gas stream flow, and a description of the records that will be maintained to document the determination of gas stream flow. The owner or operator shall maintain the plan as specified in § 63.103(c).

(b) Each owner or operator of a Group 1 transfer rack that uses a recovery device or recapture device to comply with the 98-percent organic hazardous air pollutants reduction or 20 parts per million by volume hazardous air pollutants concentration requirements in § 63.126(b)(1) of this subpart shall install either an organic monitoring device equipped with a continuous recorder, or the monitoring equipment specified in paragraph (b)(1), (b)(2), or (b)(3) of this section, depending on the type of recovery device or recapture device used. All monitoring equipment shall be installed, calibrated, and maintained according to the manufacturer's specifications or other written procedures that provide adequate assurance that the equipment would reasonably be expected to monitor accurately.

* * * * *

(3) Where a carbon adsorber is used, an integrating regeneration stream flow monitoring device having an accuracy of ±10 percent or better, capable of recording the total regeneration stream mass flow for each regeneration cycle; and a carbon bed temperature monitoring device, capable of recording the temperature of the carbon bed after regeneration and within 15 minutes of completing any cooling cycle shall be used.

* * * * *

(d) * * *

(1) Properly install, maintain, and operate a flow indicator that takes a reading at least once every 15 minutes. * * *

* * * * *

22. Section 63.128 is amended by revising paragraph (a)(9)(iv); by revising the first sentence in the introductory text of paragraph (b)(1); by revising the introductory text of paragraph (c), revising paragraph (c)(3) and adding paragraph (c)(7); revising the introductory text of paragraph (d); and revising paragraphs (d)(1), (f)(2), and (g) to read as follows:

§ 63.128 Transfer operations provisions—test methods and procedures.

(a) * * *

(9) * * *

(iv) The emission rate correction factor or excess air, integrated sampling and analysis procedures of Method 3B of 40 CFR part 60, appendix A shall be used to determine the oxygen concentration. The sampling site shall be the same as that of the organic hazardous air pollutants or organic compound samples, and the samples shall be taken during the same time that the organic hazardous air pollutants or organic compound samples are taken.

* * * * *

(b) * * *

(1) The compliance determination shall be conducted using Method 22 of 40 CFR part 60, appendix A, to determine visible emissions. * * *

* * * * *

(c) An owner or operator is not required to conduct a performance test when any of the conditions specified in paragraphs (c)(1) through (c)(7) of this section are met.

* * * * *

(3) When emissions are routed to a fuel gas system or when a boiler or process heater is used and the vent stream is introduced with the primary fuel.

* * * * *

(7) When a hazardous waste incinerator is used for which the owner or operator has been issued a final permit under 40 CFR part 270 and complies with the requirements of 40 CFR part 264, subpart O, or has certified compliance with the interim status requirements 40 CFR part 265, subpart O.

(d) An owner or operator using a combustion device followed by a scrubber or other halogen reduction device to control a halogenated transfer vent stream in compliance with § 63.126(d) of this subpart shall conduct a performance test to determine compliance with the control efficiency or emission limits for hydrogen halides and halogens.

(1) For an owner or operator determining compliance with the percent reduction of total hydrogen halides and halogens, sampling sites shall be located at the inlet and outlet of the scrubber or other halogen reduction device used to reduce halogen emissions. For an owner or operator complying with the 0.45 kilogram per hour outlet mass emission rate limit for total hydrogen halides and halogens, the sampling site shall be located at the outlet of the scrubber or other halogen reduction device and prior to release to the atmosphere.

* * * * *

(f) * * *

(2) A pressure measurement device which has a precision of #2.5 millimeters of mercury or better and which is capable of measuring above the pressure at which the tank truck or railcar is to be tested for vapor tightness.

(g) An owner or operator using a scrubber or other halogen reduction device to reduce the vent stream halogen atom mass emission rate to less than 0.45 kilograms per hour prior to a combustion device used to comply with § 63.126(d)(2) shall determine the halogen atom mass emission rate prior to the combustor according to the procedures in paragraph (d)(3) of this section.

* * * * *

23. Section 63.129 is amended by revising paragraph (a)(1) and the last sentence of paragraph (a)(4)(ii), and by adding paragraph (a)(8) to read as follows:

§ 63.129 Transfer operations provisions—reporting and recordkeeping for performance tests and Notification of Compliance Status.

(a) * * *

(1) Keep an up-to-date, readily accessible record of the data specified in paragraphs (a)(4) through (a)(8) of this section, as applicable.

* * * * *

(4) * * *

(ii) * * * For combustion devices, the concentration shall be reported on a dry basis corrected to 3-percent oxygen.

* * * * *

(8) Report that the emission stream is being routed to a fuel gas system or a process, when complying using § 63.126(b)(4).

* * * * *

24. Section 63.130 is amended by revising the introductory text of paragraph (a)(2); removing paragraphs (a)(2)(i) through (a)(2)(iv); redesignating paragraphs (a)(2)(v) through (a)(2)(vii) as (a)(2)(i) through (a)(2)(iii); and revising paragraph (b)(1), the last sentence of paragraph (b)(2), and revising paragraph (d)(4) to read as follows:

§ 63.130 Transfer operations provisions—periodic recordkeeping and reporting.

(a) * * *

(2) Records of the daily average value of each monitored parameter for each operating day determined according to

the procedures specified in § 63.152(f), except as provided in paragraphs (a)(2)(i) through (a)(2)(iii) of this section.

* * * * *

(b) * * *

(1) Hourly records of whether the flow indicator specified under § 63.127(d)(1) was operating and whether a diversion was detected at any time during the hour, as well as records of the times of all periods when the vent stream is diverted from the control device or the flow indicator is not operating.

(2) * * * In such cases, the owner or operator shall record that the monthly visual inspection of the seals or closure mechanisms has been done, and shall record the occurrence of all periods when the seal mechanism is broken, the by-pass line valve position has changed, or the key for a lock-and-key type lock has been checked out, and records of any car-seal that has broken, as listed in table 7 of this subpart.

* * * * *

(d) * * *

(4) Reports of all times recorded under paragraph (b)(2) of this section when maintenance is performed on car-sealed valves, when the car seal is broken, when the by-pass line valve position is changed, or the key for a lock-and-key type configuration has been checked out.

* * * * *

§ 63.131 [Removed and Reserved]

25. Section 63.131 is removed and reserved.

26. Sections 63.132 through 63.147 are revised to read as follows:

§ 63.132 Process wastewater provisions—general.

(a) *Existing sources.* This paragraph specifies the requirements applicable to process wastewater streams located at existing sources. The owner or operator shall comply with the requirements in paragraphs (a)(1) through (a)(3) of this section, no later than the applicable dates specified in § 63.100 of subpart F of this part.

(1) *Determine wastewater streams to be controlled for Table 9 compounds.* Determine whether each wastewater stream requires control for Table 9 compounds by complying with the requirements in either paragraph (a)(1)(i) or (a)(1)(ii) of this section, and comply with the requirements in paragraph (a)(1)(iii) of this section.

(i) Comply with paragraph (c) of this section, determining whether the wastewater stream is Group 1 or Group 2 for Table 9 compounds; or

(ii) Comply with paragraph (e) of this section, designating the wastewater stream as a Group 1 wastewater stream.

(iii) Comply with paragraph (f) of this section.

(2) *Requirements for Group 1 wastewater streams.* For wastewater streams that are Group 1 for Table 9 compounds, comply with paragraphs (a)(2)(i) through (a)(2)(iv) of this section.

(i) Comply with the applicable requirements for wastewater tanks, surface impoundments, containers, individual drain systems, and oil/water separators as specified in § 63.133 through § 63.137 of this subpart, except as provided in paragraphs (a)(2)(i)(A) and (a)(2)(i)(B) of this section and § 63.138(a)(3) of this subpart.

(A) The waste management units may be equipped with pressure relief devices that vent directly to the atmosphere provided the pressure relief device is not used for planned or routine venting of emissions.

(B) The pressure relief device remains in a closed position at all times except when it is necessary for the pressure relief device to open for the purpose of preventing physical damage or permanent deformation of the waste management unit in accordance with good engineering and safety practices.

(ii) Comply with the applicable requirements for control of Table 9 compounds as specified in § 63.138 of this subpart. Alternatively, the owner or operator may elect to comply with the treatment provisions specified in § 63.132(g) of this subpart.

(iii) Comply with the applicable monitoring and inspection requirements specified in § 63.143 of this subpart.

(iv) Comply with the applicable recordkeeping and reporting requirements specified in §§ 63.146 and 63.147 of this subpart.

(3) *Requirements for Group 2 wastewater streams.* For wastewater streams that are Group 2, comply with the applicable recordkeeping and reporting requirements specified in §§ 63.146 and 63.147 of this subpart.

(b) *New sources.* This paragraph specifies the requirements applicable to process wastewater streams located at new sources. The owner or operator shall comply with the requirements in paragraphs (b)(1) through (b)(4) of this section, no later than the applicable dates specified in § 63.100 of subpart F of this part.

(1) *Determine wastewater streams to be controlled for Table 8 compounds.* Determine whether each wastewater stream requires control for Table 8 compounds by complying with the requirements in either paragraph (b)(1)(i) or (b)(1)(ii) of this section, and comply with the requirements in paragraph (b)(1)(iii) of this section.

(i) Comply with paragraph (d) of this section, determining whether the wastewater stream is Group 1 or Group 2 for Table 8 compounds; or

(ii) Comply with paragraph (e) of this section, designating the wastewater stream as a Group 1 wastewater stream for Table 8 compounds.

(iii) Comply with paragraph (f) of this section.

(2) *Determine wastewater streams to be controlled for Table 9 compounds.* Determine whether each wastewater stream requires control for Table 9 compounds by complying with the requirements in either paragraph (b)(2)(i) or (b)(2)(ii) of this section, and comply with the requirements in paragraph (b)(2)(iii) of this section.

(i) Comply with paragraph (c) of this section, determining whether the wastewater stream is Group 1 or Group 2 for Table 9 compounds; or

(ii) Comply with paragraph (e) of this section, designating the wastewater stream as a Group 1 wastewater stream.

(iii) Comply with paragraph (f) of this section.

(3) *Requirements for Group 1 wastewater streams.* For wastewater streams that are Group 1 for Table 8 compounds and/or Table 9 compounds, comply with paragraphs (b)(3)(i) through (b)(3)(iv) of this section.

(i) Comply with the applicable requirements for wastewater tanks, surface impoundments, containers, individual drain systems, and oil/water separators specified in the requirements of § 63.133 through § 63.137 of this subpart, except as provided in paragraphs (b)(3)(i)(A) and (b)(3)(i)(B) of this section and § 63.138(a)(3) of this subpart.

(A) The waste management units may be equipped with pressure relief devices that vent directly to the atmosphere provided the pressure relief device is not used for planned or routine venting of emissions.

(B) The pressure relief device remains in a closed position at all times except when it is necessary for the pressure relief device to open for the purpose of preventing physical damage or permanent deformation of the waste management unit in accordance with good engineering and safety practices.

(ii) Comply with the applicable requirements for control of Table 8 compounds specified in § 63.138 of this subpart. Alternatively, the owner or operator may elect to comply with the provisions specified in § 63.132(g) of this subpart.

(iii) Comply with the applicable monitoring and inspection requirements specified in § 63.143 of this subpart.

(iv) Comply with the applicable recordkeeping and reporting requirements specified in §§ 63.146 and 63.147 of this subpart.

(4) *Requirements for Group 2 wastewater streams.* For wastewater streams that are Group 2 for both Table 8 and Table 9 compounds, comply with the recordkeeping and reporting requirements specified in §§ 63.146 and 63.147 of this subpart.

(c) *How to determine Group 1 or Group 2 status for Table 9 compounds.* This paragraph provides instructions for determining whether a wastewater stream is Group 1 or Group 2 for Table 9 compounds. Total annual average concentration shall be determined according to the procedures specified in § 63.144(b) of this subpart. Annual average flow rate shall be determined according to the procedures specified in § 63.144(c) of this subpart.

(1) A wastewater stream is a Group 1 wastewater stream for Table 9 compounds if:

(i) The total annual average concentration of Table 9 compounds is greater than or equal to 10,000 parts per million by weight at any flow rate; or

(ii) The total annual average concentration of Table 9 compounds is greater than or equal to 1,000 parts per million by weight and the annual average flow rate is greater than or equal to 10 liters per minute.

(2) A wastewater stream is a Group 2 wastewater stream for Table 9 compounds if it is not a Group 1 wastewater stream for Table 9 compounds by the criteria in paragraph (c)(1) of this section.

(d) *How to determine Group 1 or Group 2 status for Table 8 compounds.* This paragraph provides instructions for determining whether a wastewater sream is Group 1 or Group 2 for Table 8 compounds. Annual average concentration for each Table 8 compound shall be determined according to the procedures specified in § 63.144(b) of this subpart. Annual average flow rate shall be determined according to the procedures specified in § 63.144(c) of this subpart.

(1) A wastewater stream is a Group 1 wastewater stream for Table 8 compounds if the annual average flow rate is 0.02 liter per minute or greater and the annual average concentration of any individual table 8 compound is 10 parts per million by weight or greater.

(2) A wastewater stream is a Group 2 wastewater stream for Table 8 compounds if the annual average flow rate is less than 0.02 liter per minute or the annual average concentration for each individual Table 8 compound is less than 10 parts per million by weight.

(e) *How to designate a Group 1 wastewater stream.* The owner or operator may elect to designate a wastewater stream a Group 1 wastewater stream in order to comply with paragraph (a)(1) or (b)(1) of this section. To designate a wastewater stream or a mixture of wastewater streams a Group 1 wastewater stream, the procedures specified in paragraphs (e)(1) and (e)(2) of this section and § 63.144(a)(2) of this subpart shall be followed.

(1) From the point of determination for each wastewater stream that is included in the Group 1 designation to the location where the owner or operator elects to designate such wastewater stream(s) as a Group 1 wastewater stream, the owner or operator shall comply with all applicable emission suppression requirements specified in §§ 63.133 through 63.137.

(2) From the location where the owner or operator designates a wastewater stream or mixture of wastewater streams to be a Group 1 wastewater stream, such Group 1 wastewater stream shall be managed in accordance with all applicable emission suppression requirements specified in §§ 63.133 through 63.137 and with the treatment requirements in § 63.138 of this part.

(f) Owners or operators of sources subject to this subpart shall not discard liquid or solid organic materials with a concentration of greater than 10,000 parts per million of Table 9 compounds (as determined by analysis of the stream composition, engineering calculations, or process knowledge, according to the provisions of § 63.144(b) of this subpart) from a chemical manufacturing process unit to water or wastewater, unless the receiving stream is managed and treated as a Group 1 wastewater stream. This prohibition does not apply to materials from the activities listed in paragraphs (f)(1) through (f)(4) of this section.

(1) Equipment leaks;

(2) Activities included in maintenance or startup/shutdown/malfunction plans;

(3) Spills; or

(4) Samples of a size not greater than reasonably necessary for the method of analysis that is used.

(g) *Off-site treatment or on-site treatment not owned or operated by the source.* The owner or operator may elect to transfer a Group 1 wastewater stream or residual removed from a Group 1 wastewater stream to an on-site treatment operation not owned or operated by the owner or operator of the source generating the wastewater stream or residual, or to an off-site treatment operation.

(1) The owner or operator transferring the wastewater stream or residual shall:

(i) Comply with the provisions specified in §§ 63.133 through 63.137 of this subpart for each waste management unit that receives or manages a Group 1 wastewater stream or residual removed from a Group 1 wastewater stream prior to shipment or transport.

(ii) Include a notice with the shipment or transport of each Group 1 wastewater stream or residual removed from a Group 1 wastewater stream. The notice shall state that the wastewater stream or residual contains organic hazardous air pollutants that are to be treated in accordance with the provisions of this subpart. When the transport is continuous or ongoing (for example, discharge to a publicly-owned treatment works), the notice shall be submitted to the treatment operator initially and whenever there is a change in the required treatment.

(2) The owner or operator may not transfer the wastewater stream or residual unless the transferee has submitted to the EPA a written certification that the transferee will manage and treat any Group 1 wastewater stream or residual removed from a Group 1 wastewater stream received from a source subject to the requirements of this subpart in accordance with the requirements of either §§ 63.133 through 63.147, or § 63.102(b) of subpart F, or subpart D of this part if alternative emission limitations have been granted the transferor in accordance with those provisions. The certifying entity may revoke the written certification by sending a written statement to the EPA and the owner or operator giving at least 90 days notice that the certifying entity is rescinding acceptance of responsibility for compliance with the regulatory provisions listed in this paragraph. Upon expiration of the notice period, the owner or operator may not transfer the wastewater stream or residual to the treatment operation.

(3) By providing this written certification to the EPA, the certifying entity accepts responsibility for compliance with the regulatory provisions listed in paragraph (g)(2) of this section with respect to any shipment of wastewater or residual covered by the written certification. Failure to abide by any of those provisions with respect to such shipments may result in enforcement action by the EPA against the certifying entity in accordance with the enforcement provisions applicable to violations of these provisions by owners or operators of sources.

(4) Written certifications and revocation statements, to the EPA from the transferees of wastewater or residuals shall be signed by the responsible official of the certifying entity, provide the name and address of the certifying entity, and be sent to the appropriate EPA Regional Office at the addresses listed in 40 CFR 63.13. Such written certifications are not transferable by the treater.

§ 63.133 Process wastewater provisions—wastewater tanks.

(a) For each wastewater tank that receives, manages, or treats a Group 1 wastewater stream or a residual removed from a Group 1 wastewater stream, the owner or operator shall comply with the requirements of either paragraph (a)(1) or (a)(2) of this section as specified in table 10 of this subpart.

(1) The owner or operator shall operate and maintain a fixed roof except that if the wastewater tank is used for heating wastewater, or treating by means of an exothermic reaction or the contents of the tank is sparged, the owner or operator shall comply with the requirements specified in paragraph (a)(2) of this section.

(2) The owner or operator shall comply with the requirements in paragraphs (b) through (h) of this section and shall operate and maintain one of the emission control techniques listed in paragraphs (a)(2)(i) through (a)(2)(iv) of this section.

(i) A fixed roof and a closed-vent system that routes the organic hazardous air pollutants vapors vented from the wastewater tank to a control device.

(ii) A fixed roof and an internal floating roof that meets the requirements specified in § 63.119(b) of this subpart;

(iii) An external floating roof that meets the requirements specified in §§ 63.119(c), 63.120(b)(5), and 63.120(b)(6) of this subpart; or

(iv) An equivalent means of emission limitation. Determination of equivalence to the reduction in emissions achieved by the requirements of paragraphs (a)(2)(i) through (a)(2)(iii) of this section will be evaluated according to § 63.102(b) of subpart F of this part. The determination will be based on the application to the Administrator which shall include the information specified in either paragraph (a)(2)(iv)(A) or (a)(2)(iv)(B) of this section.

(A) Actual emissions tests that use full-size or scale-model wastewater tanks that accurately collect and measure all organic hazardous air pollutants emissions from a given control technique, and that accurately simulate wind and account for other emission variables such as temperature and barometric pressure, or

(B) An engineering evaluation that the Administrator determines is an accurate method of determining equivalence.

(b) If the owner or operator elects to comply with the requirements of paragraph (a)(2)(i) of this section, the fixed roof shall meet the requirements of paragraph (b)(1) of this section, the control device shall meet the requirements of paragraph (b)(2) of this section, and the closed-vent system shall meet the requirements of paragraph (b)(3) of this section.

(1) The fixed-roof shall meet the following requirements:

(i) Except as provided in paragraph (b)(4) of this section, the fixed roof and all openings (e.g., access hatches, sampling ports, and gauge wells) shall be maintained in accordance with the requirements specified in § 63.148 of this subpart.

(ii) Each opening shall be maintained in a closed position (e.g., covered by a lid) at all times that the wastewater tank contains a Group 1 wastewater stream or residual removed from a Group 1 wastewater stream except when it is necessary to use the opening for wastewater sampling, removal, or for equipment inspection, maintenance, or repair.

(2) The control device shall be designed, operated, and inspected in accordance with the requirements of § 63.139 of this subpart.

(3) Except as provided in paragraph (b)(4) of this section, the closed-vent system shall be inspected in accordance with the requirements of § 63.148 of this subpart.

(4) For any fixed roof tank and closed-vent system that is operated and maintained under negative pressure, the owner or operator is not required to comply with the requirements specified in § 63.148 of this subpart.

(c) If the owner or operator elects to comply with the requirements of paragraph (a)(2)(ii) of this section, the floating roof shall be inspected according to the procedures specified in § 63.120(a)(2) and (a)(3) of this subpart.

(d) Except as provided in paragraph (e) of this section, if the owner or operator elects to comply with the requirements of paragraph (a)(2)(iii) of this section, seal gaps shall be measured according to the procedures specified in § 63.120(b)(2)(i) through (b)(4) of this subpart and the wastewater tank shall be inspected to determine compliance with § 63.120(b)(5) and (b)(6) of this subpart.

(e) If the owner or operator determines that it is unsafe to perform the seal gap measurements specified in § 63.120(b)(2)(i) through (b)(4) of this subpart or to inspect the wastewater tank to determine compliance with § 63.120(b)(5) and (b)(6) of this subpart because the floating roof appears to be structurally unsound and poses an imminent or potential danger to inspecting personnel, the owner or operator shall comply with the requirements in either paragraph (e)(1) or (e)(2) of this section.

(1) The owner or operator shall measure the seal gaps or inspect the wastewater tank within 30 calendar days of the determination that the floating roof is unsafe, or

(2) The owner or operator shall empty and remove the wastewater tank from service within 45 calendar days of determining that the roof is unsafe. If the wastewater tank cannot be emptied within 45 calendar days, the owner or operator may utilize up to two extensions of up to 30 additional calendar days each. Documentation of a decision to utilize an extension shall include an explanation of why it was unsafe to perform the inspection or seal gap measurement, shall document that alternate storage capacity is unavailable, and shall specify a schedule of actions that will ensure that the wastewater tank will be emptied as soon as practical.

(f) Except as provided in paragraph (e) of this section, each wastewater tank shall be inspected initially, and semi-annually thereafter, for improper work practices in accordance with § 63.143 of this subpart. For wastewater tanks, improper work practice includes, but is not limited to, leaving open any access door or other opening when such door or opening is not in use.

(g) Except as provided in paragraph (e) of this section, each wastewater tank shall be inspected for control equipment failures as defined in paragraph (g)(1) of this section according to the schedule in paragraphs (g)(2) and (g)(3) of this section.

(1) Control equipment failures for wastewater tanks include, but are not limited to, the conditions specified in paragraphs (g)(1)(i) through (g)(1)(ix) of this section.

(i) The floating roof is not resting on either the surface of the liquid or on the leg supports.

(ii) There is stored liquid on the floating roof.

(iii) A rim seal is detached from the floating roof.

(iv) There are holes, tears, cracks or gaps in the rim seal or seal fabric of the floating roof.

(v) There are visible gaps between the seal of an internal floating roof and the wall of the wastewater tank.

(vi) There are gaps between the metallic shoe seal or the liquid mounted primary seal of an external floating roof and the wall of the wastewater tank that exceed 212 square centimeters per meter of tank diameter or the width of any portion of any gap between the primary seal and the tank wall exceeds 3.81 centimeters.

(vii) There are gaps between the secondary seal of an external floating roof and the wall of the wastewater tank that exceed 21.2 square centimeters per meter of tank diameter or the width of any portion of any gap between the secondary seal and the tank wall exceeds 1.27 centimeters.

(viii) Where a metallic shoe seal is used on an external floating roof, one end of the metallic shoe does not extend into the stored liquid or one end of the metallic shoe does not extend a minimum vertical distance of 61 centimeters above the surface of the stored liquid.

(ix) A gasket, joint, lid, cover, or door has a crack or gap, or is broken.

(2) The owner or operator shall inspect for the control equipment failures in paragraphs (g)(1)(i) through (g)(1)(viii) of this section according to the schedule specified in paragraphs (c) and (d) of this section.

(3) The owner or operator shall inspect for the control equipment failures in paragraph (g)(1)(ix) of this section initially, and semi-annually thereafter.

(h) Except as provided in § 63.140 of this subpart, when an improper work practice or a control equipment failure is identified, first efforts at repair shall be made no later than 5 calendar days after identification and repair shall be completed within 45 calendar days after identification. If a failure that is detected during inspections required by paragraphs (a)(2)(i) or (a)(3)(ii) of this section cannot be repaired within 45 calendar days and if the vessel cannot be emptied within 45 calendar days, the owner or operator may utilize up to two extensions of up to 30 additional calendar days each. Documentation of a decision to utilize an extension shall include a description of the failure, shall document that alternate storage capacity is unavailable, and shall specify a schedule of actions that will ensure that the control equipment will be repaired or the vessel will be emptied as soon as practical.

§ 63.134 Process wastewater provisions—surface impoundments.

(a) For each surface impoundment that receives, manages, or treats a Group 1 wastewater stream or a residual removed from a Group 1 wastewater stream, the owner or operator shall comply with the requirements of paragraphs (b), (c), and (d) of this section.

(b) The owner or operator shall operate and maintain on each surface impoundment either a cover (e.g., air-supported structure or rigid cover) and a closed-vent system that routes the organic hazardous air pollutants vapors vented from the surface impoundment to a control device in accordance with paragraph (b)(1) of this section, or a floating flexible membrane cover as specified in paragraph (b)(2) of this section.

(1) The cover and all openings shall meet the following requirements:

(i) Except as provided in paragraph (b)(4) of this section, the cover and all openings (e.g., access hatches, sampling ports, and gauge wells) shall be maintained in accordance with the requirements specified in § 63.148 of this subpart.

(ii) Each opening shall be maintained in a closed position (e.g., covered by a lid) at all times that a Group 1 wastewater stream or residual removed from a Group 1 wastewater stream is in the surface impoundment except when it is necessary to use the opening for sampling, removal, or for equipment inspection, maintenance, or repair.

(iii) The cover shall be used at all times that a Group 1 wastewater stream or residual removed from a Group 1 wastewater stream is in the surface impoundment except during removal of treatment residuals in accordance with 40 CFR 268.4 or closure of the surface impoundment in accordance with 40 CFR 264.228.

(2) Floating flexible membrane covers shall meet the requirements specified in paragraphs (b)(2)(i) through (b)(2)(vii) of this section.

(i) The floating flexible cover shall be designed to float on the liquid surface during normal operations, and to form a continuous barrier over the entire surface area of the liquid.

(ii) The cover shall be fabricated from a synthetic membrane material that is either:

(A) High density polyethylene (HDPE) with a thickness no less than 2.5 millimeters (100 mils); or

(B) A material or a composite of different materials determined to have both organic permeability properties that are equivalent to those of the material listed in paragraph (b)(2)(i) of this section, and chemical and physical properties that maintain the material integrity for the intended service life of the material.

(iii) The cover shall be installed in a manner such that there are no visible cracks, holes, gaps, or other open spaces between cover section seams or between the interface of the cover edge and its foundation mountings.

(iv) Except as provided for in paragraph (b)(2)(v) of this section, each opening in the floating membrane cover shall be equipped with a closure device designed to operate such that when the closure device is secured in the closed position there are no visible cracks, holes, gaps, or other open spaces in the closure device or between the perimeter of the cover opening and the closure device.

(v) The floating membrane cover may be equipped with one or more emergency cover drains for removal of stormwater. Each emergency cover drain shall be equipped with a slotted membrane fabric cover that covers at least 90 percent of the area of the opening or a flexible fabric sleeve seal.

(vi) The closure devices shall be made of suitable materials that will minimize exposure of organic hazardous air pollutants to the atmosphere, to the extent practical, and will maintain the integrity of the equipment throughout its intended service life. Factors to be considered in designing the closure devices shall include: The effects of any contact with the liquid and its vapor managed in the surface impoundment; the effects of outdoor exposure to wind, moisture, and sunlight; and the operating practices used for the surface impoundment on which the floating membrane cover is installed.

(vii) Whenever a Group 1 wastewater stream or residual from a Group 1 wastewater stream is in the surface impoundment, the floating membrane cover shall float on the liquid and each closure device shall be secured in the closed position. Opening of closure devices or removal of the cover is allowed to provide access to the surface impoundment for performing routine inspection, maintenance, or other activities needed for normal operations and/or to remove accumulated sludge or other residues from the bottom of surface impoundment. Openings shall be maintained in accordance with § 63.148 of this subpart.

(3) The control device shall be designed, operated, and inspected in accordance with § 63.139 of this subpart.

(4) Except as provided in paragraph (b)(5) of this section, the closed-vent system shall be inspected in accordance with § 63.148 of this subpart.

(5) For any cover and closed-vent system that is operated and maintained under negative pressure, the owner or operator is not required to comply with

the requirements specified in § 63.148 of this subpart.

(c) Each surface impoundment shall be inspected initially, and semi-annually thereafter, for improper work practices and control equipment failures in accordance with § 63.143 of this subpart.

(1) For surface impoundments, improper work practice includes, but is not limited to, leaving open any access hatch or other opening when such hatch or opening is not in use.

(2) For surface impoundments, control equipment failure includes, but is not limited to, any time a joint, lid, cover, or door has a crack or gap, or is broken.

(d) Except as provided in § 63.140 of this subpart, when an improper work practice or a control equipment failure is identified, first efforts at repair shall be made no later than 5 calendar days after identification and repair shall be completed within 45 calendar days after identification.

§ 63.135 Process wastewater provisions—containers.

(a) For each container that receives, manages, or treats a Group 1 wastewater stream or a residual removed from a Group 1 wastewater stream, the owner or operator shall comply with the requirements of paragraphs (b) through (f) of this section.

(b) The owner or operator shall operate and maintain a cover on each container used to handle, transfer, or store a Group 1 wastewater stream or residual removed from a Group 1 wastewater stream in accordance with the following requirements:

(1) Except as provided in paragraph (d)(4) of this section, if the capacity of the container is greater than 0.42 m^3, the cover and all openings (e.g., bungs, hatches, sampling ports, and pressure relief devices) shall be maintained in accordance with the requirements specified in § 63.148 of this subpart.

(2) If the capacity of the container is less than or equal to 0.42 m^3, the owner or operator shall comply with either paragraph (b)(2)(i) or (b)(2)(ii) of this section.

(i) The container must meet existing Department of Transportation specifications and testing requirements under 49 CFR part 178; or

(ii) Except as provided in paragraph (d)(4) of this section, the cover and all openings shall be maintained without leaks as specified in § 63.148 of this subpart.

(3) The cover and all openings shall be maintained in a closed position (e.g., covered by a lid) at all times that a Group 1 wastewater stream or residual removed from a Group 1 wastewater stream is in the container except when it is necessary to use the opening for filling, removal, inspection, sampling, or pressure relief events related to safety considerations.

(c) For containers with a capacity greater than or equal to 0.42 m^3, a submerged fill pipe shall be used when a container is being filled by pumping with a Group 1 wastewater stream or residual removed from a Group 1 wastewater stream.

(1) The submerged fill pipe outlet shall extend to no more than 6 inches or within two fill pipe diameters of the bottom of the container while the container is being filled.

(2) The cover shall remain in place and all openings shall be maintained in a closed position except for those openings required for the submerged fill pipe and for venting of the container to prevent physical damage or permanent deformation of the container or cover.

(d) During treatment of a Group 1 wastewater stream or residual removed from a Group 1 wastewater stream, including aeration, thermal or other treatment, in a container, whenever it is necessary for the container to be open, the container shall be located within an enclosure with a closed-vent system that routes the organic hazardous air pollutants vapors vented from the container to a control device.

(1) Except as provided in paragraph (d)(4) of this section, the enclosure and all openings (e.g., doors, hatches) shall be maintained in accordance with the requirements specified in § 63.148 of this subpart.

(2) The control device shall be designed, operated, and inspected in accordance with § 63.139 of this subpart.

(3) Except as provided in paragraph (d)(4) of this section, the closed-vent system shall be inspected in accordance with § 63.148 of this subpart.

(4) For any enclosure and closed-vent system that is operated and maintained under negative pressure, the owner or operator is not required to comply with the requirements specified in § 63.148 of this subpart.

(e) Each container shall be inspected initially, and semi-annually thereafter, for improper work practices and control equipment failures in accordance with § 63.143 of this subpart.

(1) For containers, improper work practice includes, but is not limited to, leaving open any access hatch or other opening when such hatch or opening is not in use.

(2) For containers, control equipment failure includes, but is not limited to, any time a cover or door has a gap or crack, or is broken.

(f) Except as provided in § 63.140 of this subpart, when an improper work practice or a control equipment failure is identified, first efforts at repair shall be made no later than 5 calendar days after identification and repair shall be completed within 15 calendar days after identification.

§ 63.136 Process wastewater provisions—individual drain systems.

(a) For each individual drain system that receives or manages a Group 1 wastewater stream or a residual removed from a Group 1 wastewater stream, the owner or operator shall comply with the requirements of paragraphs (b), (c), and (d) or with paragraphs (e), (f), and (g) of this section.

(b) If the owner or operator elects to comply with this paragraph, the owner or operator shall operate and maintain on each opening in the individual drain system a cover and if vented, route the vapors to a process or through a closed vent system to a control device. The owner or operator shall comply with the requirements of paragraphs (b)(1) through (b)(5) of this section.

(1) The cover and all openings shall meet the following requirements:

(i) Except as provided in paragraph (b)(4) of this section, the cover and all openings (e.g., access hatches, sampling ports) shall be maintained in accordance with the requirements specified in § 63.148 of this subpart.

(ii) The cover and all openings shall be maintained in a closed position at all times that a Group 1 wastewater stream or residual removed from a Group 1 wastewater stream is in the drain system except when it is necessary to use the opening for sampling or removal, or for equipment inspection, maintenance, or repair.

(2) The control device shall be designed, operated, and inspected in accordance with § 63.139 of this subpart.

(3) Except as provided in paragraph (b)(4) of this section, the closed-vent system shall be inspected in accordance with § 63.148 of this subpart.

(4) For any cover and closed-vent system that is operated and maintained under negative pressure, the owner or operator is not required to comply with the requirements specified in § 63.148 of this subpart.

(5) The individual drain system shall be designed and operated to segregate the vapors within the system from other drain systems and the atmosphere.

(c) Each individual drain system shall be inspected initially, and semi-

annually thereafter, for improper work practices and control equipment failures, in accordance with the inspection requirements specified in table 11 of this subpart.

(1) For individual drain systems, improper work practice includes, but is not limited to, leaving open any access hatch or other opening when such hatch or opening is not in use for sampling or removal, or for equipment inspection, maintenance, or repair.

(2) For individual drain systems, control equipment failure includes, but is not limited to, any time a joint, lid, cover, or door has a gap or crack, or is broken.

(d) Except as provided in §63.140 of this subpart, when an improper work practice or a control equipment failure is identified, first efforts at repair shall be made no later than 5 calendar days after identification and repair shall be completed within 15 calendar days after identification.

(e) If the owner or operator elects to comply with this paragraph, the owner or operator shall comply with the requirements in paragraphs (e)(1) through (e)(3) of this section:

(1) Each drain shall be equipped with water seal controls or a tightly fitting cap or plug. The owner or operator shall comply with paragraphs (e)(1)(i) and (e)(1)(ii) of this section.

(i) For each drain equipped with a water seal, the owner or operator shall ensure that the water seal is maintained. For example, a flow-monitoring device indicating positive flow from a main to a branch water line supplying a trap or water being continuously dripped into the trap by a hose could be used to verify flow of water to the trap. Visual observation is also an acceptable alternative.

(ii) If a water seal is used on a drain receiving a Group 1 wastewater, the owner or operator shall either extend the pipe discharging the wastewater below the liquid surface in the water seal of the receiving drain, or install a flexible shield (or other enclosure which restricts wind motion across the open area between the pipe and the drain) that encloses the space between the pipe discharging the wastewater to the drain receiving the wastewater. (Water seals which are used on hubs receiving Group 2 wastewater for the purpose of eliminating cross ventilation to drains carrying Group 1 wastewater are not required to have a flexible cap or extended subsurface discharging pipe.)

(2) Each junction box shall be equipped with a tightly fitting solid cover (i.e., no visible gaps, cracks, or holes) which shall be kept in place at all times except during inspection and maintenance. If the junction box is vented, the owner or operator shall comply with the requirements in paragraph (e)(2)(i) or (e)(2)(ii) of this section.

(i) The junction box shall be vented to a process or through a closed vent system to a control device. The closed vent system shall be inspected in accordance with the requirements of §63.148 and the control device shall be designed, operated, and inspected in accordance with the requirements of §63.139.

(ii) If the junction box is filled and emptied by gravity flow (i.e., there is no pump) or is operated with no more than slight fluctuations in the liquid level, the owner or operator may vent the junction box to the atmosphere provided that the junction box complies with the requirements in paragraphs (e)(2)(ii)(A) and (e)(2)(ii)(B) of this section.

(A) The vent pipe shall be at least 90 centimeters in length and no greater than 10.2 centimeters in nominal inside diameter.

(B) Water seals shall be installed and maintained at the wastewater entrance(s) to or exit from the junction box restricting ventilation in the individual drain system and between components in the individual drain system. The owner or operator shall demonstrate (e.g., by visual inspection or smoke test) upon request by the Administrator that the junction box water seal is properly designed and restricts ventilation.

(3) Each sewer line shall not be open to the atmosphere and shall be covered or enclosed in a manner so as to have no visible gaps or cracks in joints, seals, or other emission interfaces.

(f) Equipment used to comply with paragraphs (e)(1), (e)(2), or (e)(3) of this section shall be inspected as follows:

(1) Each drain using a tightly fitting cap or plug shall be visually inspected initially, and semi-annually thereafter, to ensure caps or plugs are in place and that there are no gaps, cracks, or other holes in the cap or plug.

(2) Each junction box shall be visually inspected initially, and semi-annually thereafter, to ensure that there are no gaps, cracks, or other holes in the cover.

(3) The unburied portion of each sewer line shall be visually inspected initially, and semi-annually thereafter, for indication of cracks or gaps that could result in air emissions.

(g) Except as provided in §63.140 of this subpart, when a gap, hole, or crack is identified in a joint or cover, first efforts at repair shall be made no later than 5 calendar days after identification, and repair shall be completed within 15 calendar days after identification.

§63.137 Process wastewater provisions—oil-water separators.

(a) For each oil-water separator that receives, manages, or treats a Group 1 wastewater stream or a residual removed from a Group 1 wastewater stream, the owner or operator shall comply with the requirements of paragraphs (c) and (d) of this section and shall operate and maintain one of the following:

(1) A fixed roof and a closed vent system that routes the organic hazardous air pollutants vapors vented from the oil-water separator to a control device. The fixed roof, closed-vent system, and control device shall meet the requirements specified in paragraph (b) of this section;

(2) A floating roof meeting the requirements in 40 CFR part 60, subpart QQQ §§60.693–2(a)(1)(i), (a)(1)(ii), (a)(2), (a)(3), and (a)(4). For portions of the oil-water separator where it is infeasible to construct and operate a floating roof, such as over the weir mechanism, the owner or operator shall operate and maintain a fixed roof, closed vent system, and control device that meet the requirements specified in paragraph (b) of this section.

(3) An equivalent means of emission limitation. Determination of equivalence to the reduction in emissions achieved by the requirements of paragraphs (a)(1) and (a)(2) of this section will be evaluated according to §63.102(b) of subpart F of this part. The determination will be based on the application to the Administrator which shall include the information specified in either paragraph (a)(3)(i) or (a)(3)(ii) of this section.

(i) Actual emissions tests that use full-size or scale-model oil-water separators that accurately collect and measure all organic hazardous air pollutants emissions from a given control technique, and that accurately simulate wind and account for other emission variables such as temperature and barometric pressure, or

(ii) An engineering evaluation that the Administrator determines is an accurate method of determining equivalence.

(b) If the owner or operator elects to comply with the requirements of paragraphs (a)(1) or (a)(2) of this section, the fixed roof shall meet the requirements of paragraph (b)(1) of this section, the control device shall meet the requirements of paragraph (b)(2) of this section, and the closed-vent system shall meet the requirements of paragraph (b)(3) of this section.

(1) The fixed-roof shall meet the following requirements:

(i) Except as provided in paragraph (b)(4) of this section, the fixed roof and all openings (e.g., access hatches, sampling ports, and gauge wells) shall be maintained in accordance with the requirements specified in §63.148 of this subpart.

(ii) Each opening shall be maintained in a closed, sealed position (e.g., covered by a lid that is gasketed and latched) at all times that the oil-water separator contains a Group 1 wastewater stream or residual removed from a Group 1 wastewater stream except when it is necessary to use the opening for sampling or removal, or for equipment inspection, maintenance, or repair.

(2) The control device shall be designed, operated, and inspected in accordance with the requirements of §63.139 of this subpart.

(3) Except as provided in paragraph (b)(4) of this section, the closed-vent system shall be inspected in accordance with the requirements of §63.148 of this subpart.

(4) For any fixed roof and closed-vent system that is operated and maintained under negative pressure, the owner or operator is not required to comply with the requirements of §63.148 of this subpart.

(c) If the owner or operator elects to comply with the requirements of paragraph (a)(2) of this section, seal gaps shall be measured according to the procedures specified in 40 CFR part 60, subpart QQQ §60.696(d)(1) and the schedule specified in paragraphs (c)(1) and (c)(2) of this section.

(1) Measurement of primary seal gaps shall be performed within 60 calendar days after installation of the floating roof and introduction of a Group 1 wastewater stream or residual removed from a Group 1 wastewater stream and once every 5 years thereafter.

(2) Measurement of secondary seal gaps shall be performed within 60 calendar days after installation of the floating roof and introduction of a Group 1 wastewater stream or residual removed from a Group 1 wastewater stream and once every year thereafter.

(d) Each oil-water separator shall be inspected initially, and semi-annually thereafter, for improper work practices in accordance with §63.143 of this subpart. For oil-water separators, improper work practice includes, but is not limited to, leaving open or ungasketed any access door or other opening when such door or opening is not in use.

(e) Each oil-water separator shall be inspected for control equipment failures as defined in paragraph (e)(1) of this section according to the schedule specified in paragraphs (e)(2) and (e)(3) of this section.

(1) For oil-water separators, control equipment failure includes, but is not limited to, the conditions specified in paragraphs (e)(1)(i) through (e)(1)(vii) of this section.

(i) The floating roof is not resting on either the surface of the liquid or on the leg supports.

(ii) There is stored liquid on the floating roof.

(iii) A rim seal is detached from the floating roof.

(iv) There are holes, tears, or other open spaces in the rim seal or seal fabric of the floating roof.

(v) There are gaps between the primary seal and the separator wall that exceed 67 square centimeters per meter of separator wall perimeter or the width of any portion of any gap between the primary seal and the separator wall exceeds 3.8 centimeters.

(vi) There are gaps between the secondary seal and the separator wall that exceed 6.7 square centimeters per meter of separator wall perimeter or the width of any portion of any gap between the secondary seal and the separator wall exceeds 1.3 centimeters.

(vii) A gasket, joint, lid, cover, or door has a gap or crack, or is broken.

(2) The owner or operator shall inspect for the control equipment failures in paragraphs (e)(1)(i) through (e)(1)(vi) of this section according to the schedule specified in paragraph (c) of this section.

(3) The owner or operator shall inspect for control equipment failures in paragraph (e)(1)(vii) of this section initially, and semi-annually thereafter.

(f) Except as provided in § 63.140 of this subpart, when an improper work practice or a control equipment failure is identified, first efforts at repair shall be made no later than 5 calendar days after identification and repair shall be completed within 45 calendar days after identification.

§ 63.138 Process wastewater provisions—Performance standards for treatment processes managing Group 1 wastewater streams and/or residuals removed from Group 1 wastewater streams.

(a) *General requirements.* This section specifies the performance standards for treating Group 1 wastewater streams. The owner or operator shall comply with the requirements as specified in paragraphs (a)(1) through (a)(6) of this section. Where multiple compliance options are provided, the options may be used in combination for different wastewater streams and/or for different compounds (e.g., Table 8 versus Table 9 compounds) in the same wastewater streams, except where otherwise provided in this section. Once a Group 1 wastewater stream or residual removed from a Group 1 wastewater stream has been treated in accordance with this subpart, it is no longer subject to the requirements of this subpart.

(1) *Existing source.* If the wastewater stream, at an existing source, is Group 1 for Table 9 compounds, comply with § 63.138(b).

(2) *New source.* If the wastewater stream, at a new source, is Group 1 for Table 8 compounds, comply with § 63.138(c). If the wastewater stream, at a new source, is Group 1 for Table 9 compounds, comply with § 63.138(b). If the wastewater stream, at a new source, is Group 1 for Table 8 and Table 9 compounds, comply with both § 63.138(b) and § 63.138(c).

Note to paragraph (a)(2): The requirements for Table 8 and/or Table 9 compounds are similar and often identical.

(3) *Biological treatment processes.* Biological treatment processes in compliance with this section may be either open or closed biological treatment processes as defined in § 63.111. An open biological treatment process in compliance with this section need not be covered and vented to a control device as required in § 63.133 through § 63.137 of this subpart. An open or a closed biological treatment process in compliance with this section and using § 63.145(f) or § 63.145(g) of this subpart to demonstrate compliance is not subject to the requirements of § 63.133 through § 63.137 of this subpart. A closed biological treatment process in compliance with this section and using § 63.145(e) of this subpart to demonstrate compliance shall comply with the requirements of § 63.133 through § 63.137 of this subpart. Waste management units upstream of an open or closed biological treatment process shall meet the requirements of § 63.133 through § 63.137 of this subpart, as applicable.

(4) *Performance tests and design evaluations.* If design steam stripper option (§ 63.138(d)) or Resource Conservation and Recovery Act (RCRA) option (§ 63.138(h)) is selected to comply with this section, neither a design evaluation nor a performance test is required. For any other non-biological treatment process, and for closed biological treatment processes as defined in § 63.111 of this subpart, the owner or operator shall conduct either a design evaluation as specified in § 63.138(j), or a performance test as specified in § 63.145, of this subpart. For each open biological treatment

process as defined in § 63.111 of this subpart, the owner or operator shall conduct a performance test as specified in § 63.145 of this subpart.

Note to paragraph (a)(4): Some open biological treatment processes may not require a performance test. Refer to § 63.145(h) and table 36 of this subpart to determine whether the biological treatment process meets the criteria that exempt the owner or operator from conducting a performance test.

(5) *Control device requirements.* When gases are vented from the treatment process, the owner or operator shall comply with the applicable control device requirements specified in § 63.139 and § 63.145 (i) and (j), and the applicable leak inspection provisions specified in § 63.148, of this subpart. This requirement does not apply to any open biological treatment process that meets the mass removal requirements. Vents from anaerobic biological treatment processes may be routed through hard-piping to a fuel gas system.

(6) *Residuals: general.* When residuals result from treating Group 1 wastewater streams, the owner or operator shall comply with the requirements for residuals specified in § 63.138(k) of this subpart.

(7) *Treatment using a series of treatment processes.* In all cases where the wastewater provisions in this subpart allow or require the use of a treatment process or control device to comply with emissions limitations, the owner or operator may use multiple treatment processes or control devices, respectively. For combinations of treatment processes where the wastewater stream is conveyed by hard-piping, the owner or operator shall comply with either the requirements of paragraph (a)(7)(i) or (a)(7)(ii) of this section. For combinations of treatment processes where the wastewater stream is not conveyed by hard-piping, the owner or operator shall comply with the requirements of paragraph (a)(7)(ii) of this section. For combinations of control devices, the owner or operator shall comply with the requirements of paragraph (a)(7)(i) of this section.

(i)(A) For combinations of treatment processes, the wastewater stream shall be conveyed by hard-piping between the treatment processes. For combinations of control devices, the vented gas stream shall be conveyed by hard-piping between the control devices.

(B) For combinations of treatment processes, each treatment process shall meet the applicable requirements of § 63.133 through § 63.137 of this subpart except as provided in paragraph (a)(3) of this section.

(C) The owner or operator shall identify, and keep a record of, the combination of treatment processes or of control devices, including identification of the first and last treatment process or control device. The owner or operator shall include this information as part of the treatment process description reported in the Notification of Compliance Status.

(D) The performance test or design evaluation shall determine compliance across the combination of treatment processes or control devices. If a performance test is conducted, the ''inlet'' shall be the point at which the wastewater stream or residual enters the first treatment process, or the vented gas stream enters the first control device. The ''outlet'' shall be the point at which the treated wastewater stream exits the last treatment process, or the vented gas stream exits the last control device.

(ii)(A) For combinations of treatment processes, each treatment process shall meet the applicable requirements of § 63.133 through § 63.137 of this subpart except as provided in paragraph (a)(3) of this section.

(B) The owner or operator shall identify, and keep a record of, the combination of treatment processes, including identification of the first and last treatment process. The owner or operator shall include this information as part of the treatment process description reported in the Notification of Compliance Status.

(C) The owner or operator shall determine the mass removed or destroyed by each treatment process. The performance test or design evaluation shall determine compliance for the combination of treatment processes by adding together the mass removed or destroyed by each treatment process.

(b) *Control options: Group 1 wastewater streams for Table 9 compounds.* The owner or operator shall comply with either paragraph (b)(1) or (b)(2) of this section for the control of Table 9 compounds at new or existing sources.

(1) *50 ppmw concentration option.* The owner or operator shall comply with paragraphs (b)(1)(i) and (b)(1)(ii) of this section.

(i) Reduce, by removal or destruction, the total concentration of Table 9 compounds to a level less than 50 parts per million by weight as determined by the procedures specified in § 63.145(b) of this subpart.

(ii) This option shall not be used when the treatment process is a biological treatment process. This option shall not be used when the wastewater stream is designated as a Group 1 wastewater stream as specified in § 63.132(e). Dilution shall not be used to achieve compliance with this option.

(2) *Other compliance options.* Comply with the requirements specified in any one of paragraphs (d), (e), (f), (g), (h), or (i) of this section.

(c) *Control options: Group 1 wastewater streams for Table 8 compounds.* The owner or operator shall comply with either paragraph (c)(1) or (c)(2) of this section for the control of Table 8 compounds at new sources.

(1) *10 ppmw concentration option.* The owner or operator shall comply with paragraphs (c)(1)(i) and (c)(1)(ii) of this section.

(i) Reduce, by removal or destruction, the concentration of the individual Table 8 compounds to a level less than 10 parts per million by weight as determined in the procedures specified in § 63.145(b) of this subpart.

(ii) This option shall not be used when the treatment process is a biological treatment process. This option shall not be used when the wastewater stream is designated as a Group 1 wastewater stream as specified in § 63.132(e). Dilution shall not be used to achieve compliance with this option.

(2) *Other compliance options.* Comply with the requirements specified in any one of paragraphs (d), (e), (f), (g), (h), or (i) of this section.

(d) *Design steam stripper option.* The owner or operator shall operate and maintain a steam stripper that meets the requirements of paragraphs (d)(1) through (d)(6) of this section.

(1) Minimum active column height of 5 meters,

(2) Countercurrent flow configuration with a minimum of 10 actual trays,

(3) Minimum steam flow rate of 0.04 kilograms of steam per liter of wastewater feed within the column,

(4) Minimum wastewater feed temperature to the steam stripper of 95 °C, or minimum column operating temperature of 95 °C,

(5) Maximum liquid loading of 67,100 liters per hour per square meter, and

(6) Operate at nominal atmospheric pressure.

(e) *Percent mass removal/destruction option.* The owner or operator of a new or existing source shall comply with paragraph (e)(1) or (e)(2) of this section for control of Table 8 and/or Table 9 compounds for Group 1 wastewater streams. This option shall not be used for biological treatment processes.

(1) *Reduce mass flow rate of Table 8 and/or Table 9 compounds by 99 percent.* For wastewater streams that are Group 1, the owner or operator shall reduce, by removal or destruction, the

mass flow rate of Table 8 and/or Table 9 compounds by 99 percent or more. The removal/destruction efficiency shall be determined by the procedures specified in § 63.145(c), for noncombustion processes, or § 63.145(d), for combustion processes.

(2) *Reduce mass flow rate of Table 8 and/or Table 9 compounds by Fr value.* For wastewater streams that are Group 1 for Table 8 and/or Table 9 compounds, the owner or operator shall reduce, by removal or destruction, the mass flow rate by at least the fraction removal (Fr) values specified in Table 9 of this subpart. (The Fr values for Table 8 compounds are all 0.99.) The removal/destruction efficiency shall be determined by the procedures specified in § 63.145(c), for noncombustion treatment processes, or § 63.145(d), for combustion treatment processes.

(f) *Required mass removal (RMR) option.* The owner or operator shall achieve the required mass removal (RMR) of Table 8 compounds at a new source for a wastewater stream that is Group 1 for Table 8 compounds and/or of Table 9 compounds at a new or existing source for a wastewater stream that is Group 1 for Table 9 compounds. For nonbiological treatment processes compliance shall be determined using the procedures specified in § 63.145(e) of this subpart. For aerobic biological treatment processes compliance shall be determined using the procedures specified in § 63.145 (e) or (f) of this subpart. For closed anaerobic biological treatment processes compliance shall be determined using the procedures specified in § 63.145(e) of this subpart. For open biological treatment processes compliance shall be determined using the procedures specified in § 63.145(f) of this subpart.

(g) *95-percent RMR option, for biological treatment processes.* The owner or operator of a new or existing source using biological treatment for at least one wastewater stream that is Group 1 for Table 9 compounds shall achieve a RMR of at least 95 percent for all Table 9 compounds. The owner or operator of a new source using biological treatment for at least one wastewater stream that is Group 1 for Table 8 compounds shall achieve a RMR of at least 95 percent for all Table 8 compounds. All Group 1 and Group 2 wastewater streams entering a biological treatment unit that are from chemical manufacturing process units subject to subpart F shall be included in the demonstration of the 95-percent mass removal. The owner or operator shall comply with paragraphs (g)(1) through (g)(4) of this section.

(1) Except as provided in paragraph (g)(4) of this section, the owner or operator shall ensure that all Group 1 and Group 2 wastewater streams from chemical manufacturing process units subject to this rule entering a biological treatment unit are treated to destroy at least 95-percent total mass of all Table 8 and/or Table 9 compounds.

(2) For open biological treatment processes compliance shall be determined using the procedures specified in § 63.145(g) of this subpart. For closed aerobic biological treatment processes compliance shall be determined using the procedures specified in § 63.145 (e) or (g) of this subpart. For closed anaerobic biological treatment processes compliance shall be determined using the procedures specified in § 63.145(e) of this subpart.

(3) For each treatment process or waste management unit that receives, manages, or treats wastewater streams subject to this paragraph, from the point of determination of each Group 1 or Group 2 wastewater stream to the biological treatment unit, the owner or operator shall comply with §§ 63.133 through § 63.137 of this subpart for control of air emissions. When complying with this paragraph, the term Group 1, whether used alone or in combination with other terms, in § 63.133 through § 63.137 of this subpart shall mean both Group 1 and Group 2.

(4) If a wastewater stream is in compliance with the requirements in paragraph (b)(1), (c)(1), (d), (e), (f), or (h) of this section before entering the biological treatment unit, the hazardous air pollutants mass of that wastewater is not required to be included in the total mass flow rate entering the biological treatment unit for the purpose of demonstrating compliance.

(h) *Treatment in a RCRA unit option.* The owner or operator shall treat the wastewater stream or residual in a unit identified in, and complying with, paragraph (h)(1), (h)(2), or (h)(3) of this section. These units are exempt from the design evaluation or performance tests requirements specified in § 63.138(a)(3) and § 63.138(j) of this subpart, and from the monitoring requirements specified in § 63.132(a)(2)(iii) and § 63.132(b)(3)(iii) of this subpart, as well as recordkeeping and reporting requirements associated with monitoring and performance tests.

(1) The wastewater stream or residual is discharged to a hazardous waste incinerator for which the owner or operator has been issued a final permit under 40 CFR part 270 and complies with the requirements of 40 CFR part 264, subpart O, or has certified compliance with the interim status requirements of 40 CFR part 265, subpart O;

(2) The wastewater stream or residual is discharged to a process heater or boiler burning hazardous waste for which the owner or operator:

(i) Has been issued a final permit under 40 CFR part 270 and complies with the requirements of 40 CFR part 266, subpart H; or

(ii) Has certified compliance with the interim status requirements of 40 CFR part 266, subpart H.

(3) The wastewater stream or residual is discharged to an underground injection well for which the owner or operator has been issued a final permit under 40 CFR part 270 or 40 CFR part 144 and complies with the requirements of 40 CFR part 122. The owner or operator shall comply with all applicable requirements of this subpart prior to the point where the wastewater enters the underground portion of the injection well.

(i) *One megagram total source mass flow rate option.* A wastewater stream is exempt from the requirements of paragraphs (b) and (c) of this section if the owner or operator elects to comply with either paragraph (i)(1) or (i)(2) of this section.

(1) *All Group 1 wastewater streams at the source.* The owner or operator shall demonstrate that the total source mass flow rate for Table 8 and/or Table 9 compounds is less than 1 megagram per year using the procedures in paragraphs (i)(1)(i) and (i)(1)(ii) of this section. The owner or operator shall include all Group 1 wastewater streams at the source in the total source mass flow rate. The total source mass flow rate shall be based on the mass as calculated before the wastewater stream is treated.

(i) Calculate the annual average mass flow rate for each Group 1 wastewater stream by multiplying the annual average flow rate of the wastewater stream, as determined by procedures specified in § 63.144(c), times the total annual average concentration of Table 8 and/or Table 9 compounds, as determined by procedures specified in § 63.144(b) of this subpart. (The mass flow rate of compounds in a wastewater stream that is Group 1 for both Table 8 and Table 9 compounds should be included in the annual average mass flow rate only once.)

(ii) Calculate the total source mass flow rate from all Group 1 wastewater streams by adding together the annual average mass flow rate calculated for each Group 1 wastewater stream.

(2) *Untreated and partially treated Group 1 wastewater streams.* The owner or operator shall demonstrate that the total source mass flow rate for untreated

Group 1 wastewater streams and Group 1 wastewater streams treated to levels less stringent than required in paragraph (b) or (c) of this section is less than 1 megagram per year using the procedures in paragraphs (i)(2)(i) and (i)(2)(ii) of this section. The owner or operator shall manage these wastewater streams in accordance with paragraph (i)(2)(iii) of this section, and shall comply with paragraph (i)(2)(iv) of this section.

(i) Calculate the annual average mass flow rate in each wastewater stream by multiplying the annual average flow rate of the wastewater stream, as determined by procedures specified in § 63.144(c), times the total annual average concentration of Table 8 and/or Table 9 compounds, as determined by procedures specified in § 63.144(b). (The mass flow rate of compounds in a wastewater stream that are Group 1 for both Table 8 and Table 9 compounds should be included in the annual average mass flow rate only once.)

(A) For each untreated Group 1 wastewater stream, the annual average flow rate and the total annual average concentration shall be determined for that stream's point of determination.

(B) For each Group 1 wastewater stream that is treated to levels less stringent than those required by paragraph (b) or (c) of this section, the annual average flow rate and total annual average concentration shall be determined at the discharge from the treatment process or series of treatment processes.

(C) The annual average mass flow rate for Group 1 wastewater streams treated to the levels required by paragraph (b) or (c) of this section is not included in the calculation of the total source mass flow rate.

(ii) The total source mass flow rate shall be calculated by summing the annual average mass flow rates from all Group 1 wastewater streams, except those excluded by paragraph (i)(2)(i)(C) of this section.

(iii) The owner or operator of each waste management unit that receives, manages, or treats the wastewater stream prior to or during treatment shall comply with the requirements of §§ 63.133 through 63.137 of this subpart, as applicable.

(iv) Wastewater streams included in this option shall be identified in the Notification of Compliance Status required by §63.152(b).

(j) *Design evaluations or performance tests for treatment processes.* Except as provided in paragraph (j)(3) or (h) of this section, the owner or operator shall demonstrate by the procedures in either paragraph (j)(1) or (j)(2) of this section that each nonbiological treatment process used to comply with paragraphs (b)(1), (c)(1), (e), and/or (f) of this section achieves the conditions specified for compliance. The owner or operator shall demonstrate by the procedures in either paragraph (j)(1) or (j)(2) of this section that each closed biological treatment process used to comply with paragraphs (f) or (g) of this section achieves the conditions specified for compliance. If an open biological treatment unit is used to comply with paragraph (f) or (g) of this section, the owner or operator shall comply with § 63.145(f) or § 63.145(g), respectively, of this subpart. Some biological treatment processes may not require a performance test. Refer to § 63.145(h) and table 36 of this subpart to determine whether the open biological treatment process meets the criteria that exempt the owner or operator from conducting a performance test.

(1) A design evaluation and supporting documentation that addresses the operating characteristics of the treatment process and that is based on operation at a representative wastewater stream flow rate and a concentration under which it would be most difficult to demonstrate compliance. For closed biological treatment processes, the actual mass removal shall be determined by a mass balance over the unit. The mass flow rate of Table 8 or Table 9 compounds exiting the treatment process shall be the sum of the mass flow rate of Table 8 or Table 9 compounds in the wastewater stream exiting the biological treatment process and the mass flow rate of the vented gas stream exiting the control device. The mass flow rate entering the treatment process minus the mass flow rate exiting the process determines the actual mass removal.

(2) Performance tests conducted using test methods and procedures that meet the applicable requirements specified in § 63.145 of this subpart.

(3) The provisions of paragraphs (j)(1) and (j)(2) of this section do not apply to design stream strippers which meet the requirements of paragraph (d) of this section.

(k) *Residuals.* For each residual removed from a Group 1 wastewater stream, the owner or operator shall control for air emissions by complying with §§ 63.133–137 of this subpart and by complying with one of the provisions in paragraphs (k)(1) through (k)(4) of this section.

(1) Recycle the residual to a production process or sell the residual for the purpose of recycling. Once a residual is returned to a production process, the residual is no longer subject to this section.

(2) Return the residual to the treatment process.

(3) Treat the residual to destroy the total combined mass flow rate of Table 8 and/or Table 9 compounds by 99 percent or more, as determined by the procedures specified in § 63.145(c) or (d) of this subpart.

(4) Comply with the requirements for RCRA treatment options specified in § 63.138(h) of this subpart.

§ 63.139 Process wastewater provisions—control devices.

(a) For each control device or combination of control devices used to comply with the provisions in §§ 63.133 through 63.138 of this subpart, the owner or operator shall operate and maintain the control device or combination of control devices in accordance with the requirements of paragraphs (b) through (f) of this section.

(b) Whenever organic hazardous air pollutants emissions are vented to a control device which is used to comply with the provisions of this subpart, such control device shall be operating.

(c) The control device shall be designed and operated in accordance with paragraph (c)(1), (c)(2), (c)(3), (c)(4), or (c)(5) of this section.

(1) An enclosed combustion device (including but not limited to a vapor incinerator, boiler, or process heater) shall meet the conditions in paragraph (c)(1)(i), (c)(1)(ii), or (c)(1)(iii) of this section, alone or in combination with other control devices. If a boiler or process heater is used as the control device, then the vent stream shall be introduced into the flame zone of the boiler or process heater.

(i) Reduce the total organic compound emissions, less methane and ethane, or total organic hazardous air pollutants emissions vented to the control device by 95 percent by weight or greater;

(ii) Achieve an outlet total organic compound concentration, less methane and ethane, or total organic hazardous air pollutants concentration of 20 parts per million by volume on a dry basis corrected to 3 percent oxygen. The owner or operator shall use either Method 18 of 40 CFR part 60, appendix A, or any other method or data that has been validated according to the applicable procedures in Method 301 of appendix A of this part; or

(iii) Provide a minimum residence time of 0.5 seconds at a minimum temperature of 760° C.

(2) A vapor recovery system (including but not limited to a carbon adsorption system or condenser), alone

or in combination with other control devices, shall reduce the total organic compound emissions, less methane and ethane, or total organic hazardous air pollutants emissions vented to the control device of 95 percent by weight or greater or achieve an outlet total organic compound concentration, less methane and ethane, or total organic hazardous air pollutants concentration of 20 parts per million by volume, whichever is less stringent. The 20 parts per million by volume performance standard is not applicable to compliance with the provisions of § 63.134 or § 63.135 of this subpart.

(3) A flare shall comply with the requirements of § 63.11(b) of subpart A of this part.

(4) A scrubber, alone or in combination with other control devices, shall reduce the total organic compound emissions, less methane and ethane, or total organic hazardous air pollutants emissions in such a manner that 95 weight-percent is either removed, or destroyed by chemical reaction with the scrubbing liquid or achieve an outlet total organic compound concentration, less methane and ethane, or total organic hazardous air pollutants concentration of 20 parts per million by volume, whichever is less stringent. The 20 parts per million by volume performance standard is not applicable to compliance with the provisions of § 63.134 or § 63.135 of this subpart.

(5) Any other control device used shall, alone or in combination with other control devices, reduce the total organic compound emissions, less methane and ethane, or total organic hazardous air pollutants emissions vented to the control device by 95 percent by weight or greater or achieve an outlet total organic compound concentration, less methane and ethane, or total organic hazardous air pollutants concentration of 20 parts per million by volume, whichever is less stringent. The 20 parts per million by volume performance standard is not applicable to compliance with the provisions of § 63.134 or § 63.135 of this subpart.

(d) Except as provided in paragraph (d)(4) of this section, an owner or operator shall demonstrate that each control device or combination of control devices achieves the appropriate conditions specified in paragraph (c) of this section by using one or more of the methods specified in paragraphs (d)(1), (d)(2), or (d)(3) of this section.

(1) Performance tests conducted using the test methods and procedures specified in § 63.145(i) of this subpart for control devices other than flares; or

(2) A design evaluation that addresses the vent stream characteristics and control device operating parameters specified in paragraphs (d)(2)(i) through (d)(2)(vii) of this section.

(i) For a thermal vapor incinerator, the design evaluation shall consider the vent stream composition, constituent concentrations, and flow rate and shall establish the design minimum and average temperature in the combustion zone and the combustion zone residence time.

(ii) For a catalytic vapor incinerator, the design evaluation shall consider the vent stream composition, constituent concentrations, and flow rate and shall establish the design minimum and average temperatures across the catalyst bed inlet and outlet.

(iii) For a boiler or process heater, the design evaluation shall consider the vent stream composition, constituent concentrations, and flow rate; shall establish the design minimum and average flame zone temperatures and combustion zone residence time; and shall describe the method and location where the vent stream is introduced into the flame zone.

(iv) For a condenser, the design evaluation shall consider the vent stream composition, constituent concentrations, flow rate, relative humidity, and temperature and shall establish the design outlet organic compound concentration level, design average temperature of the condenser exhaust vent stream, and the design average temperatures of the coolant fluid at the condenser inlet and outlet.

(v) For a carbon adsorption system that regenerates the carbon bed directly on-site in the control device such as a fixed-bed adsorber, the design evaluation shall consider the vent stream composition, constituent concentrations, flow rate, relative humidity, and temperature and shall establish the design exhaust vent stream organic compound concentration level, adsorption cycle time, number and capacity of carbon beds, type and working capacity of activated carbon used for carbon beds, design total regeneration stream mass or volumetric flow over the period of each complete carbon bed regeneration cycle, design carbon bed temperature after regeneration, design carbon bed regeneration time, and design service life of carbon.

(vi) For a carbon adsorption system that does not regenerate the carbon bed directly on-site in the control device such as a carbon canister, the design evaluation shall consider the vent stream composition, constituent concentrations, mass or volumetric flow rate, relative humidity, and temperature and shall establish the design exhaust vent stream organic compound concentration level, capacity of carbon bed, type and working capacity of activated carbon used for carbon bed, and design carbon replacement interval based on the total carbon working capacity of the control device and source operating schedule.

(vii) For a scrubber, the design evaluation shall consider the vent stream composition; constituent concentrations; liquid-to-vapor ratio; scrubbing liquid flow rate and concentration; temperature; and the reaction kinetics of the constituents with the scrubbing liquid. The design evaluation shall establish the design exhaust vent stream organic compound concentration level and will include the additional information in paragraphs (d)(2)(vii)(A) and (d)(2)(vii)(B) of this section for trays and a packed column scrubber.

(A) Type and total number of theoretical and actual trays;

(B) Type and total surface area of packing for entire column, and for individual packed sections if column contains more than one packed section.

(3) For flares, the compliance determination specified in § 63.11(b) of subpart A of this part and § 63.145(j) of this subpart.

(4) An owner or operator using any control device specified in paragraphs (d)(4)(i) through (d)(4)(iv) of this section is exempt from the requirements in paragraphs (d)(1) through (d)(3) of this section and from the requirements in § 63.6(f) of subpart A of this part.

(i) A boiler or process heater with a design heat input capacity of 44 megawatts or greater.

(ii) A boiler or process heater into which the emission stream is introduced with the primary fuel.

(iii) A boiler or process heater burning hazardous waste for which the owner or operator:

(A) Has been issued a final permit under 40 CFR part 270 and complies with the requirements of 40 CFR part 266, subpart H, or

(B) Has certified compliance with the interim status requirements of 40 CFR part 266, subpart H.

(iv) A hazardous waste incinerator for which the owner or operator has been issued a final permit under 40 CFR part 270 and complies with the requirements of 40 CFR part 264, subpart O, or has certified compliance with the interim status requirements of 40 CFR part 265, subpart O.

(e) The owner or operator of a control device that is used to comply with the provisions of this section shall monitor the control device in accordance with § 63.143 of this subpart.

(f) Except as provided in § 63.140 of this subpart, if gaps, cracks, tears, or holes are observed in ductwork, piping, or connections to covers and control devices during an inspection, a first effort to repair shall be made as soon as practical but no later than 5 calendar days after identification. Repair shall be completed no later than 15 calendar days after identification or discovery of the defect.

§ 63.140 Process wastewater provisions—delay of repair.

(a) Delay of repair of equipment for which a control equipment failure or a gap, crack, tear, or hole has been identified, is allowed if the repair is technically infeasible without a shutdown, as defined in § 63.101 of subpart F of this part, or if the owner or operator determines that emissions of purged material from immediate repair would be greater than the emissions likely to result from delay of repair. Repair of this equipment shall occur by the end of the next shutdown.

(b) Delay of repair of equipment for which a control equipment failure or a gap, crack, tear, or hole has been identified, is allowed if the equipment is emptied or is no longer used to treat or manage Group 1 wastewater streams or residuals removed from Group 1 wastewater streams.

(c) Delay of repair of equipment for which a control equipment failure or a gap, crack, tear, or hole has been identified is also allowed if additional time is necessary due to the unavailability of parts beyond the control of the owner or operator. Repair shall be completed as soon as practical. The owner or operator who uses this provision shall comply with the requirements of § 63.147(c)(7) to document the reasons that the delay of repair was necessary.

§ 63.141 Reserved.

§ 63.142 Reserved.

§ 63.143 Process wastewater provisions—inspections and monitoring of operations.

(a) For each wastewater tank, surface impoundment, container, individual drain system, and oil-water separator that receives, manages, or treats a Group 1 wastewater stream, a residual removed from a Group 1 wastewater stream, a recycled Group 1 wastewater stream, or a recycled residual removed from a Group 1 wastewater stream, the owner or operator shall comply with the inspection requirements specified in table 11 of this subpart.

(b) For each design steam stripper and biological treatment unit used to comply with § 63.138 of this subpart, the owner or operator shall comply with the monitoring requirements specified in table 12 of this subpart.

(c) If the owner or operator elects to comply with Item 1 in table 12 of this subpart, the owner or operator shall request approval to monitor appropriate parameters that demonstrate proper operation of the biological treatment unit. The request shall be submitted according to the procedures specified in § 63.151(f) of this subpart, and shall include a discription of planned reporting and recordkeeping procedures. The owner or operator shall include as part of the submittal the basis for the selected monitoring frequencies and the methods that will be used. The Administrator will specify appropriate reporting and recordkeeping requirements as part of the review of the permit application or by other appropriate means.

(d) If the owner or operator elects to comply with Item 3 in table 12 of this subpart, the owner or operator shall request approval to monitor appropriate parameters that demonstrate proper operation of the selected treatment process. The request shall be submitted according to the procedures specified in § 63.151(f) of this subpart, and shall include a description of planned reporting and recordkeeping procedures. The Administrator will specify appropriate reporting and recordkeeping requirements as part of the review of the permit application or by other appropriate means.

(e) Except as provided in paragraphs (e)(4) and (e)(5) of this section, for each control device used to comply with the requirements of §§ 63.133 through 63.139 of this subpart, the owner or operator shall comply with the requirements in § 63.139(d) of this subpart, and with the requirements specified in paragraph (e)(1), (e)(2), or (e)(3) of this section.

(1) The owner or operator shall comply with the monitoring requirements specified in table 13 of this subpart; or

(2) The owner or operator shall use an organic monitoring device installed at the outlet of the control device and equipped with a continuous recorder. Continuous recorder is defined in § 63.111 of this subpart; or

(3) The owner or operator shall request approval to monitor parameters other than those specified in paragraphs (e)(1) and (e)(2) of this section. The request shall be submitted according to the procedures specified in § 63.151(f) of this subpart, and shall include a description of planned reporting and recordkeeping procedures. The Administrator will specify appropriate reporting and recordkeeping requirements as part of the review of the permit application or by other appropriate means.

(4) For a boiler or process heater in which all vent streams are introduced with primary fuel, the owner or operator shall comply with the requirements in § 63.139(d) of this subpart but the owner or operator is exempt from the monitoring requirements specified in paragraphs (e)(1) through (e)(3) of this section.

(5) For a boiler or process heater with a design heat input capacity of 44 megawatts or greater, the owner or operator shall comply with the requirements in § 63.139(d) of this subpart but the owner or operator is exempt from the monitoring requirements specified in paragraphs (e)(1) through (e)(3) of this section.

(f) For each parameter monitored in accordance with paragraph (c), (d), or (e) of this section, the owner or operator shall establish a range that indicates proper operation of the treatment process or control device. In order to establish the range, the owner or operator shall comply with the requirements specified in §§ 63.146(b)(7)(ii)(A) and (b)(8)(ii) of this subpart.

(g) Monitoring equipment shall be installed, calibrated, and maintained according to the manufacturer's specifications or other written procedures that provide adequate assurance that the equipment would reasonably be expected to monitor accurately.

§ 63.144 Process wastewater provisions—test methods and procedures for determining applicability and Group 1/Group 2 determinations (determining which wastewater streams require control).

(a) *Procedures to determine applicability.* An owner or operator shall comply with paragraph (a)(1) or (a)(2) of this section for each wastewater stream to determine which wastewater streams require control for Table 8 and/or Table 9 compounds. The owner or operator may use a combination of the approaches in paragraphs (a)(1) and (a)(2) of this section for different wastewater streams generated at the source.

(1) *Determine Group 1 or Group 2 status.* Determine whether a wastewater stream is a Group 1 or Group 2 wastewater stream in accordance with paragraphs (b) and (c) of this section.

(2) *Designate as Group 1.* An owner or operator may designate as a Group 1 wastewater stream a single wastewater stream or a mixture of wastewater streams. The owner or operator is not

required to determine the concentration or flow rate for each designated Group 1 wastewater stream for the purposes of this section.

(b) *Procedures to establish concentrations, when determining Group status under paragraph (a)(1) of this section.* An owner or operator who elects to comply with the requirements of paragraph (a)(1) of this section shall determine the annual average concentration for Table 8 and/or Table 9 compounds according to paragraph (b)(1) of this section for existing sources or paragraph (b)(2) of this section for new sources. The annual average concentration shall be a flow weighted average representative of actual or anticipated operation of the chemical manufacturing process unit generating the wastewater over a designated 12 month period. For flexible operation units, the owner or operator shall consider the anticipated production over the designated 12 month period and include all wastewater streams generated by the process equipment during this period. The owner/operator is not required to determine the concentration of Table 8 or Table 9 compounds that are not reasonably expected to be in the process.

(1) *Existing sources.* An owner or operator of an existing source who elects to comply with the requirements of paragraph (a)(1) of this section shall determine the flow weighted total annual average concentration for Table 9 compounds. For the purposes of this section, the term concentration, whether concentration is used alone or with other terms, may be adjusted by multiplying by the compound-specific fraction measured (Fm) factors listed in table 34 of this subpart unless determined by the methods in § 63.144(b)(5)(i)(A) and/or (B). When concentration is determined by Method 305 as specified in § 63.144(b)(5)(i)(B), concentration may be adjusted by dividing by the compound-specific Fm factors listed in table 34 of this subpart. When concentration is determined by Method 25D as specified in § 63.144(b)(5)(i)(A), concentration may not be adjusted by the compound-specific Fm factors listed in table 34 of this subpart. Compound-specific Fm factors may be used only when concentrations of individual compounds are determined or when only one compound is in the wastewater stream. Flow weighted total annual average concentration for Table 9 compounds means the total mass of Table 9 compounds occurring in the wastewater stream during the designated 12-month period divided by the total mass of the wastewater stream during the same designated 12-month period. The total annual average concentration shall be determined for each wastewater stream either at the point of determination, or downstream of the point of determination with adjustment for concentration changes made according to paragraph (b)(6) of this section. The procedures specified in paragraphs (b)(3), (b)(4), and (b)(5) of this section are considered acceptable procedures for determining the annual average concentration. They may be used in combination, and no one procedure shall take precedence over another.

(2) *New sources.* An owner or operator of a new source who elects to comply with the requirements of paragraph (a)(1) of this section shall determine both the flow weighted total annual average concentration for Table 9 compounds and the flow weighted annual average concentration for each Table 8 compound. For the purposes of this section, the term concentration, whether concentration is used alone or with other terms, may be adjusted by multiplying by the compound-specific Fm factors listed in table 34 of this subpart unless determined by the methods in § 63.144(b)(5)(i)(A) and/or (B). When concentration is determined by Method 305 as specified in § 63.144(b)(5)(i)(B), concentration may be adjusted by dividing by the compound-specific Fm factors listed in table 34 of this subpart. When concentration is determined by Method 25D as specified in § 63.144(b)(5)(i)(A), concentration may not be adjusted by the compound-specific Fm factors listed in table 34 of this subpart. Compound-specific fraction measured factors are compound specific and shall be used only when concentration of individual compounds are determined or when only one compound is in the wastewater stream. The flow weighted annual average concentration of each Table 8 compound means the mass of each Table 8 compound occurring in the wastewater stream during the designated 12-month period divided by the total mass of the wastewater stream during the same designated 12-month period. Flow weighted total annual average concentration for Table 9 compounds means the total mass of Table 9 compounds occurring in the wastewater stream during the designated 12-month period divided by the total mass of the wastewater stream during the same designated 12-month period. The annual average concentration shall be determined for each wastewater stream either at the point of determination, or downstream of the point of determination with adjustment for concentration changes made according to paragraph (b)(6) of this section. Procedures specified in paragraphs (b)(3), (b)(4), and (b)(5) of this section are considered acceptable procedures for determining the annual average concentration. They may be used in combination, and no one procedure shall take precedence over another.

(3) *Knowledge of the wastewater.* Where knowledge is used to determine the annual average concentration, the owner or operator shall provide sufficient information to document the annual average concentration for wastewater streams determined to be Group 2 wastewater streams. Documentation to determine the annual average concentration is not required for Group 1 streams. Examples of acceptable documentation include material balances, records of chemical purchases, process stoichiometry, or previous test results. If test data are used, the owner or operator shall provide documentation describing the testing protocol and the means by which any losses of volatile compounds during sampling, and the bias and accuracy of the analytical method, were accounted for in the determination.

(4) *Bench-scale or pilot-scale test data.* Where bench-scale or pilot-scale test data are used to determine the annual average concentration, the owner or operator shall provide sufficient information to document that the data are representative of the actual annual average concentration, or are reliably indicative of another relevant characteristic of the wastewater stream that could be used to predict the annual average concentration. For concentration data, the owner or operator shall also provide documentation describing the testing protocol, and the means by which any losses of volatile compounds during sampling, and the bias and accuracy of the analytical method, were accounted for in the determination of annual average concentration.

(5) *Test data from sampling at the point of determination or at a location downstream of the point of determination.* Where an owner or operator elects to comply with paragraph (a)(1) of this section by measuring the concentration for the relevant Table 8 or Table 9 compounds, the owner or operator shall comply with the requirements of this paragraph. For each wastewater stream, measurements shall be made either at the point of determination, or downstream of the point of determination with adjustment for concentration changes made

according to paragraph (b)(6) of this section. A minimum of three samples from each wastewater stream shall be taken. Samples may be grab samples or composite samples.

(i) *Methods.* The owner or operator shall use any of the methods specified in paragraphs (b)(5)(i)(A) through (b)(5)(i)(F) of this section.

(A) *Method 25D.* Use procedures specified in Method 25D of 40 CFR part 60, appendix A.

(B) *Method 305.* Use procedures specified in Method 305 of 40 CFR part 63, appendix A.

(C) *Methods 624 and 625.* Use procedures specified in Methods 624 and 625 of 40 CFR part 136, appendix A and comply with the sampling protocol requirements specified in paragraph (b)(5)(ii) of this section. If these methods are used to analyze one or more compounds that are not on the method's published list of approved compounds, the Alternative Test Procedure specified in 40 CFR 136.4 and 136.5 shall be followed. For Method 625, make corrections to the compounds for which the analysis is being conducted based on the accuracy as recovery factors in Table 7 of the method.

(D) *Method 1624 and Method 1625.* Use procedures specified in Method 1624 and Method 1625 of 40 CFR part 136, appendix A and comply with the requirements specified in paragraph (b)(5)(ii) of this section. If these methods are used to analyze one or more compounds that are not on the method's published list of approved compounds, the Alternative Test Procedure specified in 40 CFR 136.4 and 136.5 shall be followed.

(E) *Other EPA method(s).* Use procedures specified in the method and comply with the requirements specified in paragraphs (b)(5)(ii) and either paragraph (b)(5)(iii)(A) or (b)(5)(iii)(B) of this section.

(F) *Method(s) other than EPA method.* Use procedures specified in the method and comply with the requirements specified in paragraphs (b)(5)(ii) and (b)(5)(iii)(A) of this section.

(ii) *Sampling plan.* The owner or operator who is expressly referred to this paragraph by provisions of this subpart shall prepare a sampling plan. Wastewater samples shall be collected using sampling procedures which minimize loss of organic compounds during sample collection and analysis and maintain sample integrity. The sample plan shall include procedures for determining recovery efficiency of the relevant hazardous air pollutants listed in table 8 or table 9 of this subpart. An example of an acceptable sampling plan would be one that incorporates similar sampling and sample handling requirements to those of Method 25D of 40 CFR part 60, appendix A. The sampling plan shall be maintained at the facility.

(iii) *Validation of methods.* The owner or operator shall validate EPA methods other than Methods 25D, 305, 624, 625, 1624, and 1625 using the procedures specified in paragraph (b)(5)(iii)(A) or (b)(5)(iii)(B) of this section. The owner or operator shall validate other methods as specified in paragraph (b)(5)(iii)(A) of this section.

(A) *Validation of EPA methods and other methods.* The method used to measure organic hazardous air pollutants concentrations in the wastewater shall be validated according to section 5.1 or 5.3, and the corresponding calculations in section 6.1 or 6.3, of Method 301 of appendix A of this part. The data are acceptable if they meet the criteria specified in section 6.1.5 or 6.3.3 of Method 301 of appendix A of this part. If correction is required under section 6.3.3 of Method 301 of appendix A of this part, the data are acceptable if the correction factor is within the range 0.7 to 1.30. Other sections of Method 301 of appendix A of this part are not required. The concentrations of the individual organic hazardous air pollutants measured in the water may be corrected to their concentrations had they been measured by Method 305 of appendix A of this part, by multiplying each concentration by the compound-specific fraction measured (Fm) factor listed in table 34 of this subpart.

(B) *Validation for EPA methods.* Follow the procedures as specified in ''Alternative Validation Procedure for EPA Waste Methods'' 40 CFR part 63, appendix D.

(iv) *Calculations of average concentration.* The average concentration for each individually speciated Table 8 compound shall be calculated by adding the individual values determined for the specific compound in each sample and dividing by the number of samples. The total average concentration of Table 9 compounds shall be calculated by first summing the concentration of the individual compounds to obtain a total hazardous air pollutants concentration for the sample; add the sample totals and then divide by the number of samples in the run to obtain the sample average for the run. If the method used does not speciate the compounds, the sample results should be added and this total divided by the number of samples in the run to obtain the sample average for the run.

(6) *Adjustment for concentrations determined downstream of the point of determination.* The owner or operator shall make corrections to the annual average concentration or total annual average concentration when the concentration is determined downstream of the point of determination at a location where: two or more wastewater streams have been mixed; one or more wastewater streams have been treated; or, losses to the atmosphere have occurred. The owner or operator shall make the adjustments either to the individual data points or to the final annual average concentration.

(c) *Procedures to determine flow rate, when evaluating Group status under paragraph (a)(1) of this section.* An owner or operator who elects to comply with paragraph (a)(1) of this section shall determine the annual average flow rate of the wastewater stream either at the point of determination for each wastewater stream, or downstream of the point of determination with adjustment for flow rate changes made according to paragraph (c)(4) of this section. These procedures may be used in combination for different wastewater streams at the source. The annual average flow rate for the wastewater stream shall be representative of actual or anticipated operation of the chemical manufacturing process unit generating the wastewater over a designated 12-month period. The owner or operator shall consider the total annual wastewater volume generated by the chemical manufacturing process unit. If the chemical manufacturing process unit is a flexible operation unit, the owner or operator shall consider all anticipated production in the process equipment over the designated 12-month period. The procedures specified in paragraphs (c)(1), (c)(2), and (c)(3) of this section are considered acceptable procedures for determining the flow rate. They may be used in combination, and no one procedure shall take precedence over another.

(1) *Knowledge of the wastewater.* The owner or operator may use knowledge of the wastewater stream and/or the process to determine the annual average flow rate. The owner or operator shall use the maximum expected annual average production capacity of the process unit, knowledge of the process, and/or mass balance information to either: Estimate directly the annual average wastewater flow rate; or estimate the total annual wastewater volume and then divide total volume by 525,600 minutes in a year. Where knowledge is used to determine the

annual average flow rate, the owner or operator shall provide sufficient information to document the flow rate for wastewater streams determined to be Group 2 wastewater streams. Documentation to determine the annual average flow rate is not required for Group 1 streams.

(2) *Historical Records.* The owner or operator may use historical records to determine the annual average flow rate. Derive the highest annual average flow rate of wastewater from historical records representing the most recent 5 years of operation or, if the process unit has been in service for less than 5 years but at least 1 year, from historical records representing the total operating life of the process unit. Where historical records are used to determine the annual average flow rate, the owner or operator shall provide sufficient information to document the flow rate for wastewater streams determined to be Group 2 wastewater streams. Documentation to determine the annual average flow rate is not required for Group 1 streams.

(3) *Measurements of flow rate.* Where an owner or operator elects to comply with paragraph (a)(1) of this section by measuring the flow rate, the owner or operator shall comply with the requirements of this paragraph. Measurements shall be made at the point of determination, or at a location downstream of the point of determination with adjustments for flow rate changes made according to paragraph (c)(4) of this section. Where measurement data are used to determine the annual average flow rate, the owner or operator shall provide sufficient information to document the flow rate for wastewater streams determined to be Group 2 wastewater streams. Documentation to determine the annual average flow rate is not required for Group 1 streams.

(4) *Adjustment for flow rates determined downstream of the point of determination.* The owner or operator shall make corrections to the annual average flow rate of a wastewater stream when it is determined downstream of the point of determination at a location where two or more wastewater streams have been mixed or one or more wastewater streams have been treated. The owner or operator shall make corrections for such changes in the annual average flow rate.

§63.145 Process wastewater provisions—test methods and procedures to determine compliance.

(a) *General.* This section specifies the procedures for performance tests that are conducted to demonstrate compliance of a treatment process or a control device with the control requirements specified in §63.138 of this subpart. Owners or operators conducting a design evaluation shall comply with the requirements of paragraph (a)(1) or (a)(2) of this section. Owners or operators conducting a performance test shall comply with the applicable requirements in paragraphs (a) through (i) of this section.

(1) *Performance tests and design evaluations for treatment processes.* If design steam stripper option (§63.138(d)) or RCRA option (§63.138(h)) is selected to comply with §63.138, neither a design evaluation nor a performance test is required. For any other non-biological treatment process, the owner or operator shall conduct either a design evaluation as specified in §63.138(j), or a performance test as specified in this section. For closed biological treatment processes, the owner or operator shall conduct either a design evaluation as specified in §63.138(j), or a performance test as specified in this section. For each open biological treatment process, the owner or operator shall conduct a performance test as specified in this section.

Note: Some open biological treatment processes may not require a performance test. Refer to §63.145(h) and table 36 of this subpart to determine whether the biological treatment process meets the criteria that exempt the owner or operator from conducting a performance test.

(2) *Performance tests and design evaluations for control devices.* The owner or operator shall conduct either a design evaluation as specified in §63.139(d), or a performance test as specified in paragraph (i) of this section for control devices other than flares and paragraph (j) of this section for flares.

(3) *Representative process unit operating conditions.* Compliance shall be demonstrated for representative operating conditions. Operations during periods of startup, shutdown, or malfunction and periods of nonoperation shall not constitute representative conditions. The owner or operator shall record the process information that is necessary to document operating conditions during the test.

(4) *Representative treatment process or control device operating conditions.* Performance tests shall be conducted when the treatment process or control device is operating at a representative inlet flow rate and concentration. If the treatment process or control device will be operating at several different sets of representative operating conditions, the owner or operator shall comply with paragraphs (a)(4)(i) and (a)(4)(ii) of this section. The owner or operator shall record information that is necessary to document treatment process or control device operating conditions during the test.

(i) *Range of operating conditions.* If the treatment process or control device will be operated at several different sets of representative operating conditions, performance testing over the entire range is not required. In such cases, the performance test results shall be supplemented with modeling and/or engineering assessments to demonstrate performance over the operating range.

(ii) *Consideration of residence time.* If concentration and/or flow rate to the treatment process or control device are not relatively constant (i.e., comparison of inlet and outlet data will not be representative of performance), the owner or operator shall consider residence time, when determining concentration and flow rate.

(5) *Testing equipment.* All testing equipment shall be prepared and installed as specified in the applicable test methods, or as approved by the Administrator.

(6) *Compounds not required to be considered in performance tests or design evaluations.* Compounds that meet the requirements specified in paragraph (a)(6)(i), (a)(6)(ii), or (a)(6)(iii) of this section are not required to be included in the performance test. Concentration measurements based on Method 305 shall be adjusted by dividing each concentration by the compound-specific Fm factor listed in table 34 of this subpart. Concentration measurements based on methods other than Method 305 shall not be adjusted by the compound-specific Fm factor listed in table 34 of this subpart.

(i) Compounds not used or produced by the chemical manufacturing process unit; or

(ii) Compounds with concentrations at the point of determination that are below 1 part per million by weight; or

(iii) Compounds with concentrations at the point of determination that are below the lower detection limit where the lower detection limit is greater than 1 part per million by weight. The method shall be an analytical method for wastewater which has that compound as a target analyte.

(7) *Treatment using a series of treatment processes.* In all cases where the wastewater provisions in this subpart allow or require the use of a treatment process to comply with emissions limitations, the owner or operator may use multiple treatment processes. The owner or operator complying with the requirements of §63.138(a)(7)(i), when wastewater is

conveyed by hard-piping, shall comply with either §63.145(a)(7)(i) or §63.145(a)(7)(ii) of this subpart. The owner or operator complying with the requirements of §63.138(a)(7)(ii) of this subpart shall comply with the requirements of §63.145(a)(7)(ii) of this subpart.

(i) The owner or operator shall conduct the performance test across each series of treatment processes. For each series of treatment processes, inlet concentration and flow rate shall be measured either where the wastewater stream enters the first treatment process in a series of treatment processes, or prior to the first treatment process as specified in § 63.145(a)(9) of this subpart. For each series of treatment processes, outlet concentration and flow rate shall be measured where the wastewater stream exits the last treatment process in the series of treatment processes, except when the last treatment process is an open or a closed aerobic biological treatment process demonstrating compliance by using the procedures in § 63.145 (f) or (g) of this subpart. When the last treatment process is either an open or a closed aerobic biological treatment process demonstrating compliance by using the procedures in § 63.145 (f) or (g) of this subpart, inlet and outlet concentrations and flow rates shall be measured as provided in paragraphs (a)(7)(i)(A) and (a)(7)(i)(B) of this section. The mass flow rates removed or destroyed by the series of treatment processes and by the biological treatment process are all used to calculate actual mass removal (AMR) as specified in § 63.145(f)(5)(ii) of this subpart.

(A) The inlet and outlet to the series of treatment processes prior to the biological treatment process are the points at which the wastewater enters the first treatment process and exits the last treatment process in the series, respectively, except as provided in paragraph (a)(9)(ii) of this section.

(B) The inlet to the biological treatment process shall be the point at which the wastewater enters the biological treatment process or the outlet from the series of treatment processes identified in paragraph (a)(7)(i)(A) of this section, except as provided in paragraph (a)(9)(ii) of this section.

(ii) The owner or operator shall conduct the performance test across each treatment process in the series of treatment processes. The mass flow rate removed or destroyed by each treatment process shall be added together to determine whether compliance has been demonstrated using § 63.145 (c), (d), (e), (f), and (g), as applicable. If a biological treatment process is one of the treatment processes in the series of treatment processes, the inlet to the biological treatment process shall be the point at which the wastewater enters the biological treatment process, or the inlet to the equalization tank if all the criteria of paragraph (a)(9)(ii) of this section are met.

(8) When using a biological treatment process to comply with § 63.138 of this subpart, the owner or operator may elect to calculate the AMR using a subset of Table 8 and/or Table 9 compounds determined at the point of determination or downstream of the point of determination with adjustment for concentration and flowrate changes made according to § 63.144(b)(6) and § 63.144(c)(4) of this subpart, respectively. All Table 8 and/or Table 9 compounds measured to determine the RMR, except as provided by § 63.145(a)(6), shall be included in the RMR calculation.

(9) The owner or operator determining the inlet for purposes of demonstrating compliance with § 63.145 (e), (f), or (g) of this subpart may elect to comply with paragraph (a)(9)(i) or (a)(9)(ii) of this section.

(i) When wastewater is conveyed exclusively by hard-piping from the point of determination to a treatment process that is either the only treatment process or the first in a series of treatment processes (i.e., no treatment processes or other waste management units are used upstream of this treatment process to store, handle, or convey the wastewater), the inlet to the treatment process shall be at any location from the point of determination to where the wastewater stream enters the treatment process. When samples are taken upstream of the treatment process and before wastewater streams have converged, the owner or operator shall ensure that the mass flow rate of all Group 1 wastewater streams is accounted for when using § 63.138 (e) or (f) to comply and that the mass flow rate of all Group 1 and Group 2 wastewater streams is accounted for when using § 63.138(g) to comply, except as provided in § 63.145(a)(6).

(ii) The owner or operator may consider the inlet to the equalization tank as the inlet to the biological treatment process if all the criteria in paragraphs (a)(9)(ii)(A) through (a)(9)(ii)(C) of this section are met. The outlet from the series of treatment processes prior to the biological treatment process is the point at which the wastewater exits the last treatment process in the series prior to the equalization tank, if the equalization tank and biological treatment process are part of a series of treatment processes. The owner or operator shall ensure that the mass flow rate of all Group 1 wastewater streams is accounted for when using § 63.138 (e) or (f) to comply and that the mass flow rate of all Group 1 and Group 2 wastewater streams is accounted for when using § 63.138(g) to comply, except as provided in § 63.145(a)(6).

(A) The wastewater is conveyed by hard-piping from either the last previous treatment process or the point of determination to the equalization tank.

(B) The wastewater is conveyed from the equalization tank exclusively by hard-piping to the biological treatment process and no treatment processes or other waste management units are used to store, handle, or convey the wastewater between the equalization tank and the biological treatment process.

(C) The equalization tank is equipped with a fixed roof and a closed vent system that routes emissions to a control device that meets the requirements of § 63.133(a)(2)(i) and § 63.133 (b)(1) through (b)(4) of this subpart.

(b) *Noncombustion treatment process—concentration limits.* This paragraph applies to performance tests that are conducted to demonstrate compliance of a noncombustion treatment process with the parts per million by weight wastewater stream concentration limits at the outlet of the treatment process. This compliance option is specified in § 63.138(b)(1) and § 63.138(c)(1). Wastewater samples shall be collected using sampling procedures which minimize loss of organic compounds during sample collection and analysis and maintain sample integrity per § 63.144(b)(5)(ii). Samples shall be collected and analyzed using the procedures specified in § 63.144 (b)(5)(i), (b)(5)(ii), and (b)(5)(iii) of this subpart. Samples may be grab samples or composite samples. Samples shall be taken at approximately equally spaced time intervals over a 1-hour period. Each 1-hour period constitutes a run, and the performance test shall consist of a minimum of 3 runs. Concentration measurements based on Method 305 may be adjusted by dividing each concentration by the compound-specific Fm factor listed in Table 34 of this subpart. Concentration measurements based on methods other than Method 305 may be adjusted by multiplying each concentration by the compound-specific Fm factor listed in table 34 of this subpart. (For wastewater streams that are Group 1 for both Table 8 and Table 9 compounds, compliance is

demonstrated only if the sum of the concentrations of Table 9 compounds is less than 50 ppmw, and the concentration of each Table 8 compound is less than 10 ppmw.)

(c) *Noncombustion, nonbiological treatment process: Percent mass removal/destruction option.* This paragraph applies to performance tests that are conducted to demonstrate compliance of a noncombustion, nonbiological treatment process with the percent mass removal limits specified in § 63.138(e) (1) and (2) for Table 8 and/or Table 9 compounds. The owner or operator shall comply with the requirements specified in § 63.145 (c)(1) through (c)(6) of this subpart.

(1) *Concentration.* The concentration of Table 8 and/or Table 9 compounds entering and exiting the treatment process shall be determined as provided in this paragraph. Wastewater samples shall be collected using sampling procedures which minimize loss of organic compounds during sample collection and analysis and maintain sample integrity per § 63.144(b)(5)(ii). The method shall be an analytical method for wastewater which has that compound as a target analyte. Samples may be grab samples or composite samples. Samples shall be taken at approximately equally spaced time intervals over a 1-hour period. Each 1-hour period constitutes a run, and the performance test shall consist of a minimum of 3 runs. Concentration measurements based on Method 305 shall be adjusted by dividing each concentration by the compound-specific Fm factor listed in Table 34 of this subpart. Concentration measurements based on methods other than Method 305 shall not adjust by the compound-specific Fm factor listed in Table 34 of this subpart.

(2) *Flow rate.* The flow rate of the entering and exiting wastewater streams shall be determined using inlet and outlet flow meters, respectively. Where the outlet flow is not greater than the inlet flow, a flow meter shall be used, and may be used at either the inlet or outlet. Flow rate measurements shall be taken at the same time as the concentration measurements.

(3) *Calculation of mass flow rate—for noncombustion, nonbiological treatment processes.* The mass flow rates of Table 8 and/or Table 9 compounds entering and exiting the treatment process are calculated as follows.

$$QMW_a = \frac{\rho}{p*10^6}\left(\sum_{k=1}^{p} Q_{a,k}C_{T,a,k}\right) \qquad \text{(Eqn WW1)}$$

$$QMW_b = \frac{\rho}{p*10^6}\left(\sum_{k=1}^{p} Q_{b,k}C_{T,b,k}\right) \qquad \text{(Eqn WW2)}$$

Where:

QMW_a, QMW_b=Mass flow rate of Table 8 or Table 9 compounds, average of all runs, in wastewater entering (QMW_a) or exiting (QMW_b) the treatment process, kilograms per hour.

ρ=Density of the wastewater, kilograms per cubic meter.

$Q_{a,k}$, $Qb_{b,k}$=Volumetric flow rate of wastewater entering ($Q_{a,k}$) or exiting ($Q_{b,k}$) the treatment process during each run k, cubic meters per hour.

$C_{T,a,k}$, $C_{T,b,k}$=Total concentration of Table 8 or Table 9 compounds in wastewater entering ($C_{T,a,k}$) or exiting ($C_{T,b,k}$) the treatment process during each run k, parts per million by weight.

p=Number of runs.

k=Identifier for a run.

10^6=conversion factor, mg/kg

(4) *Percent removal calculation for mass flow rate.* The percent mass removal across the treatment process shall be calculated as follows:

$$E = \frac{QMW_a - QMW_b}{QMW_a} \times 100 \qquad \text{(Eqn WW3)}$$

Where:

E=Removal or destruction efficiency of the treatment process, percent.

QMW_a, QMW_b=Mass flow rate of Table 8 or Table 9 compounds in wastewater entering (QMW_a) and exiting (QMW_b) the treatment process, kilograms per hour (as calculated using Equations WW1 and WW2).

(5) *Calculation of flow-weighted average of Fr values.* If complying with § 63.138(e)(2), use Equation WW8 to calculate the flow-weighted average of the Fr values listed in Table 9 of this subpart. When the term ''combustion'' is used in Equation WW8, the term ''treatment process'' shall be used for the purposes of this paragraph.

(6) *Compare mass removal efficiency to required efficiency.* Compare the mass removal efficiency (calculated in Equation WW3) to the required efficiency as specified in § 63.138(e) of this subpart. If complying with § 63.138(e)(1), compliance is demonstrated if the mass removal efficiency is 99 percent or greater. If complying with § 63.138(e)(2), compliance is demonstrated if the mass removal efficiency is greater than or equal to the flow-weighted average of the Fr values calculated in Equation WW8.

(d) *Combustion treatment processes: percent mass removal/destruction option.* This paragraph applies to performance tests that are conducted to demonstrate compliance of a combustion treatment process with the percent mass destruction limits specified in § 63.138(e) (1) and (2) for Table 9 compounds, and/or § 63.138(e)(1) for Table 8 compounds. The owner or operator shall comply with the requirements specified in § 63.145 (d)(1) through (d)(9) of this subpart. (Wastewater streams that are Group 1 for both Table 8 and Table 9 compounds need only do the compliance demonstration for Table 9 compounds.)

(1) *Concentration in wastewater stream entering the combustion treatment process.* The concentration of

Table 8 and/or Table 9 compounds entering the treatment process shall be determined as provided in this paragraph. Wastewater samples shall be collected using sampling procedures which minimize loss of organic compounds during sample collection and analysis and maintain sample integrity per § 63.144(b)(5)(ii). The method shall be an analytical method for wastewater which has that compound as a target analyte. Samples may be grab samples or composite samples. Samples shall be taken at approximately equally spaced time intervals over a 1-hour period. Each 1-hour period constitutes a run, and the performance test shall consist of a minimum of 3 runs. Concentration measurements based on Method 305 of appendix A of this part shall be adjusted by dividing each concentration by the compound-specific Fm factor listed in table 34 of this subpart. Concentration measurements based on methods other than Method 305 shall not adjust by the compound-specific Fm factor listed in table 34 of this subpart.

(2) *Flow rate of wastewater entering the combustion treatment process.* The flow rate of the wastewater stream entering the combustion treatment process shall be determined using an inlet flow meter. Flow rate measurements shall be taken at the same time as the concentration measurements.

(3) *Calculation of mass flow rate in wastewater stream entering combustion treatment processes.* The mass flow rate of Table 8 and/or Table 9 compounds entering the treatment process is calculated as follows:

$$QMW_a = \frac{\rho}{p*10^6}\left(\sum_{k=1}^{p} Q_{a,k} * C_{T,a,k}\right) \qquad \text{(Eqn WW4)}$$

Where:

QMW_a=Mass flow rate of Table 8 or Table 9 compounds entering the combustion unit, kilograms per hour.

ρ=Density of the wastewater stream, kilograms per cubic meter.

$Q_{a,k}$=Volumetric flow rate of wastewater entering the combustion unit during run k, cubic meters per hour.

$C_{T,a,k}$=Total concentration of Table 8 or Table 9 compounds in the wastewater stream entering the combustion unit during run k, parts per million by weight.

p=Number of runs.

k=Identifier for a run.

(4) *Concentration in vented gas stream exiting the combustion treatment process.* The concentration of Table 8 and/or Table 9 compounds exiting the combustion treatment process in any vented gas stream shall be determined as provided in this paragraph. Samples may be grab samples or composite samples. Samples shall be taken at approximately equally spaced time intervals over a 1-hour period. Each 1-hour period constitutes a run, and the performance test shall consist of a minimum of 3 runs. Concentration measurements shall be determined using Method 18 of 40 CFR part 60, appendix A. Alternatively, any other test method validated according to the procedures in Method 301 of appendix A of this part may be used.

(5) *Volumetric flow rate of vented gas stream exiting the combustion treatment process.* The volumetric flow rate of the vented gas stream exiting the combustion treatment process shall be determined using Method 2, 2A, 2C, or 2D of 40 CFR part 60, appendix A, as appropriate. Volumetric flow rate measurements shall be taken at the same time as the concentration measurements.

(6) *Calculation of mass flow rate of vented gas stream exiting combustion treatment processes.* The mass flow rate of Table 8 and/or Table 9 compounds in a vented gas stream exiting the combustion treatment process shall be calculated as follows:

$$QMG_a = K_2\left(\sum_{i=1}^{n} CG_{a,i} MW_i\right) QG_a \qquad \text{(Eqn WW5)}$$

$$QMG_b = K_2\left(\sum_{i=1}^{n} CG_{b,i} MW_i\right) QG_b \qquad \text{(Eqn WW6)}$$

Where:

$CG_{a,i}$, $CG_{b,i}$=Concentration of total organic compounds (TOC) (minus methane and ethane) or total organic hazardous air pollutants, in vented gas stream, entering ($CG_{a,i}$) and exiting ($CG_{b,i}$) the control device, dry basis, parts per million by volume.

QMG_a, QMG_b=Mass rate of TOC (minus methane and ethane) or total organic hazardous air pollutants, in vented gas stream, entering (QMG_a) and exiting (QMG_b) the control device, dry basis, kilograms per hour.

MW_i=Molecular weight of a component, kilogram/kilogram-mole.

QG_a,QG_b=Flow rate of gas stream entering (QG_a) and exiting (QG_b) the control device, dry standard cubic meters per hour.

K_2=Constant, 41.57 x 10^{-9} (parts per million)$^{-1}$ (gram-mole per standard cubic meter) (kilogram/gram), where standard temperature (gram-mole per standard cubic meter) is 20° Celsius.

i=Identifier for a compound.

n=Number of components in the sample.

(7) *Destruction efficiency calculation.* The destruction efficiency of the combustion unit for Table 8 and/or Table 9 compounds shall be calculated as follows:

$$E = \frac{QMW_a - QMG_b}{QMW_a} * 100 \qquad \text{(Eqn WW7)}$$

Where:

E=Destruction efficiency of Table 8 or Table 9 compounds for the combustion unit, percent.

QMW_a=Mass flow rate of Table 8 or Table 9 compounds entering the combustion unit, kilograms per hour.

QMG_b=Mass flow rate of Table 8 or Table 9 compounds in vented gas stream exiting the combustion treatment process, kilograms per hour.

(8) *Calculation of flow-weighted average of Fr values.* Use Equation WW8 to calculate the flow-weighted average of the Fr values listed in table 9 of this subpart.

$$Fr_{avg} = \left[\frac{\sum_{i=1}^{n} \sum_{k=1}^{p} Fr_i * C_{i,a,k} * Q_{a,k}}{\sum_{k=1}^{p} \sum_{i=1}^{n} C_{i,a,k} * Q_{a,k}} \right] * 100 \qquad \text{(Eqn WW8)}$$

Where:

Fr_{avg}=Flow-weighted average of the Fr values.

$C_{i,a,k}$=Concentration of Table 8 and/or Table 9 compounds in wastewater stream entering the combustion unit, during run k, parts per million by weight.

$Q_{a,k}$=Volumetric flow rate of wastewater entering the combustion unit during run k, cubic meters per hour.

Fr_i=Compound-specific Fr value listed in table 9 of this subpart.

(9) *Calculate flow-weighted average of Fr values and compare to mass destruction efficiency.* Compare the mass destruction efficiency (calculated in Equation WW 7) to the required efficiency as specified in § 63.138(e). If complying with § 63.138(e)(1), compliance is demonstrated if the mass destruction efficiency is 99 percent or greater. If complying with § 63.138(e)(2), compliance is demonstrated if the mass destruction efficiency is greater than or equal to the flow-weighted average of the Fr value calculated in Equation WW8.

(e) *Non-combustion treatment processes including closed biological treatment processes: RMR option.* This paragraph applies to performance tests for non-combustion treatment processes other than open biological treatment processes to demonstrate compliance with the mass removal provisions for Table 8 and/or Table 9 compounds. Compliance options for noncombustion treatment processes are specified in § 63.138(f) of this subpart. Compliance options for closed aerobic or anaerobic biological treatment processes are specified in § 63.138(f) and § 63.138(g) of this subpart. When complying with § 63.138(f), the owner or operator shall comply with the requirements specified in § 63.145(e)(1) through (e)(6) of this subpart. When complying with § 63.138(g), the owner or operator shall comply with the requirements specified in § 63.145(e)(1) through (e)(6) of this subpart. (Wastewater streams that are Group 1 for both Table 8 and Table 9 compounds need only do the compliance demonstration for Table 9 compounds.)

(1) *Concentration in wastewater stream.* The concentration of Table 8 and/or Table 9 compounds shall be determined as provided in this paragraph. Concentration measurements to determine RMR shall be taken at the point of determination or downstream of the point of determination with adjustment for concentration change made according to § 63.144(b)(6) of this subpart. Concentration measurements to determine AMR shall be taken at the inlet and outlet to the treatment process and as provided in § 63.145(a)(7) for a series of treatment processes. Wastewater samples shall be collected using sampling procedures which minimize loss of organic compounds during sample collection and analysis and maintain sample integrity per § 63.144(b)(5)(ii). The method shall be an analytical method for wastewater which has that compound as a target analyte. Samples may be grab samples or composite samples. Samples shall be taken at approximately equally spaced time intervals over a 1-hour period. Each 1-hour period constitutes a run, and the performance test shall consist of a minimum of 3 runs. Concentration measurements based on Method 305 shall be adjusted by dividing each concentration by the compound-specific Fm factor listed in table 34 of this subpart. Concentration measurements based on methods other than Method 305 shall not adjust by the compound-specific Fm factor listed in table 34 of this subpart.

(2) *Flow rate.* Flow rate measurements to determine RMR shall be taken at the point of determination or downstream of the point of determination with adjustment for flow rate change made according to § 63.144(c)(4) of this subpart. Flow rate measurements to determine AMR shall be taken at the inlet and outlet to the treatment process and as provided in § 63.145(a)(7) for a series of treatment processes. Flow rate shall be determined using inlet and outlet flow measurement devices. Where the outlet flow is not greater than the inlet flow, a flow measurement device shall be used, and may be used at either the inlet or outlet. Flow rate measurements shall be taken at the same time as the concentration measurements.

(3) *Calculation of RMR for non-combustion treatment processes including closed biological treatment processes.* When using § 63.138(f) to comply, the required mass removal of Table 8 and/or Table 9 compounds for each Group 1 wastewater stream shall be calculated as specified in paragraph (e)(3)(i) of this section. When using § 63.138(g) to comply, the required mass removal shall be calculated as specified in paragraph (e)(3)(ii) of this section.

(i) When using § 63.138(f) to comply, the required mass removal of Table 8 and/or Table 9 compounds for each Group 1 wastewater stream shall be calculated using Equation WW9.

$$RMR = \frac{\rho}{10^9} Q \sum_{i=1}^{n} (C_i * Fr_i) \qquad \text{(Eqn WW9)}$$

Where:

RMR=Required mass removal for treatment process or series of treatment processes, kilograms per hour.

ρ=Density of the Group 1 wastewater stream, kilograms per cubic meter.

Q=Volumetric flow rate of wastewater stream at the point of determination, liters per hour.

i=Identifier for a compound.

n=Number of Table 8 or Table 9 compounds in stream.

C_i=Concentration of Table 8 or Table 9 compounds at the point of determination, parts per million by weight.

Fr_i=Fraction removal value of a Table 8 or Table 9 compound. Fr values are listed in table 9 of this subpart.

10^9=Conversion factor, mg/kg * l/m^3.

(ii) When using § 63.138(g) to comply, the required mass removal is 95 percent of the mass flow rate for all Group 1 and Group 2 wastewater streams combined for treatment. The required mass removal of Table 8 and/or Table 9 compounds for all Group 1 and Group 2 wastewater streams combined for treatment when complying with § 63.138(g) shall be calculated using the following equation:

$$RMR = \frac{0.95\rho}{10^9} Q \sum_{i=1}^{n} (C_i) \qquad \text{(Eqn WW9a)}$$

Where:

RMR=Required mass removal for treatment process or series of treatment processes, kilograms per hour.

ρ=Density of the Group 1 wastewater stream, kilograms per cubic meter.

Q=Volumetric flow rate of wastewater stream at the point of determination, liters per hour.

i=Identifier for a compound.

n=Number of Table 8 or Table 9 compounds in stream.

C_i=Concentration of Table 8 or Table 9 compounds at the point of determination, parts per million by weight.

10^9=Conversion factor, mg/kg * l/m^3

(4)(i) The required mass removal is calculated by summing the required mass removal for each Group 1 wastewater stream to be combined for treatment when complying with § 63.138(f).

(ii) The required mass removal is calculated by summing the required mass removal for all Group 1 and Group 2 wastewater streams combined for treatment when complying with § 63.138(g).

(5) *The AMR calculation procedure for non-combustion treatment processes including closed biological treatment processes.* The AMR shall be calculated as follows:

$$AMR = (QMW_a - QMW_b) \qquad \text{(Eqn WW10)}$$

Where:

AMR=Actual mass removal of Table 8 or Table 9 compounds achieved by treatment process or series of treatment processes, kilograms per hour.

QMW_a=Mass flow rate of Table 8 or Table 9 compounds in wastewater entering the treatment process or first treament process in a series of treatment processes, kilograms per hour.

QMW_b=Mass flow rate of Table 8 or Table 9 compounds in wastewater exiting the last treatment process in a series of treatment processes, kilograms per hour.

(6) *Compare RMR to AMR.* When complying with § 63.138(f), compare the RMR calculated in Equation WW9 to the AMR calculated in Equation WW10. Compliance is demonstrated if the AMR is greater than or equal to the RMR. When complying with § 63.138(g), compare the RMR calculated in Equation WW–9a to the AMR calculated in Equation WW10. Compliance is demonstrated if the AMR is greater than or equal to 95-percent mass removal.

(f) *Open or closed aerobic biological treatment processes: Required mass removal (RMR) option.* This paragraph applies to the use of performance tests that are conducted for open or closed aerobic biological treatment processes to demonstrate compliance with the mass removal provisions for Table 8 and/or Table 9 compounds. These compliance options are specified in § 63.138(f) of this subpart. The owner or operator shall comply with the requirements specified in § 63.145 (f)(1) through (f)(6) of this subpart. Some compounds may not require a performance test. Refer to § 63.145(h) and table 36 of this subpart to determine which compounds may be exempt from the requirements of this paragraph.

(1) *Concentration in wastewater stream.* The concentration of Table 8 and/or Table 9 compounds shall be determined as provided in this paragraph. Concentration measurements to determine RMR shall be taken at the point of determination or downstream of the point of determination with adjustment for concentration change made according to § 63.144(b)(6) of this subpart. Concentration measurements to determine AMR shall be taken at the inlet and outlet to the treatment process and as provided in § 63.145(a)(7) for a series of treatment processes. Wastewater samples shall be collected using sampling procedures which minimize loss of organic compounds during sample collection and analysis and maintain sample integrity per § 63.144(b)(5)(ii). The method shall be an analytical method for wastewater which has that compound as a target analyte. Samples may be grab samples or composite samples. Samples shall be taken at approximately equally spaced time intervals over a 1-hour period. Each 1-hour period constitutes a run, and the performance test shall consist of a minimum of 3 runs. Concentration measurements based on Method 305 shall be adjusted by dividing each concentration by the compound-specific Fm factor listed in table 34 of this subpart. Concentration measurements

based on methods other than Method 305 shall not adjust by the compound-specific Fm factor listed in table 34 of this subpart.

(2) *Flow rate.* Flow rate measurements to determine RMR shall be taken at the point of determination or downstream of the point of determination with adjustment for flow rate change made according to § 63.144(c)(4) of this subpart. Flow rate measurements to determine AMR shall be taken at the inlet and outlet to the treatment process and as provided in § 63.145(a)(7) for a series of treatment processes. Flow rate shall be determined using inlet and outlet flow measurement devices. Where the outlet flow is not greater than the inlet flow, a flow measurement device shall be used, and may be used at either the inlet or outlet. Flow rate measurements shall be taken at the same time as the concentration measurements.

(3) *Calculation of RMR for open or closed aerobic biological treatment processes.* The required mass removal of Table 8 and/or Table 9 compounds for each Group 1 wastewater stream shall be calculated using the following equation:

$$\mathrm{RMR} = \frac{\rho}{10^9} Q \sum_{i=1}^{n} \left(C_i * Fr_i\right) \qquad \text{(Eqn WW11)}$$

Where:

RMR=Required mass removal for treatment process or series of treatment processes, kilograms per hour.

ρ=Density of the Group 1 wastewater stream, kilograms per cubic meter.

Q=Volumetric flow rate of wastewater stream at the point of determination, liters per hour.

i=Identifier for a compound.

n=Number of Table 8 or Table 9 compounds in stream.

C_i=Concentration of Table 8 or Table 9 compounds at the point of determination, parts per million by weight.

Fr_i=Fraction removal value of a Table 8 or Table 9 compound. Fr values are listed in table 9 of this subpart.

10^9=Conversion factor, mg/kg * l/m^3.

(4) The required mass removal is calculated by adding together the required mass removal for each Group 1 wastewater stream to be combined for treatment.

(5) *Actual mass removal calculation procedure for open or closed aerobic biological treatment processes.* The actual mass removal (AMR) shall be calculated using Equation WW12 as specified in paragraph (f)(5)(i) of this section when the performance test is performed across the open or closed aerobic biological treatment process only. If compliance is being demonstrated in accordance with § 63.145(a)(7)(i), the AMR for the series shall be calculated using Equation WW13 in § 63.145(f)(5)(ii). (This equation is for situations where treatment is performed in a series of treatment processes connected by hard-piping.) If compliance is being demonstrated in accordance with § 63.145(a)(7)(ii), the AMR for the biological treatment process shall be calculated using Equation WW12 in § 63.145(f)(5)(i). The AMR for the biological treatment process used in a series of treatment processes calculated using Equation WW12 shall be added to the AMR determined for each of the other individual treatment processes in the series of treatment processes.

(i) Calculate AMR for the open or closed aerobic biological treatment process as follows:

$$\mathrm{AMR} = QMW_a * F_{bio} \qquad \text{(Eqn WW12)}$$

Where:

AMR=Actual mass removal of Table 8 or Table 9 compounds achieved by open or closed biological treatment process, kilograms per hour.

QMW_a=Mass flow rate of Table 8 or Table 9 compounds in wastewater entering the treatment process, kilograms per hour.

F_{bio}=Site-specific fraction of Table 8 or Table 9 compounds biodegraded. F_{bio} shall be determined as specified in § 63.145(h) and appendix C of this subpart.

(ii) Calculate AMR across a series of treatment units where the last treatment unit is an open or closed aerobic biological treatment process as follows:

$$\mathrm{AMR} = QMW_a - \left(QMW_b\right)\left(1 - F_{bio}\right) \qquad \text{(Eqn WW13)}$$

Where:

AMR=Actual mass removal of Table 8 or Table 9 compounds achieved by a series of treatment processes, kilograms per hour.

QMW_a=Mass flow rate of Table 8 or Table 9 compounds in wastewater entering the first treatment process in a series of treatment processes, kilograms per hour.

QMW_b=Mass flow rate of Table 8 or Table 9 compounds in wastewater exiting the last treatment process in a series of treatment processes prior to the biological treatment process, kilograms per hour.

F_{bio}=Site-specific fraction of Table 8 or Table 9 compounds biodegraded. F_{bio} shall be determined as specified in § 63.145(h) and appendix C of this subpart.

(6) *Compare RMR to AMR.* Compare the RMR calculated in Equation WW11 to the AMR calculated in either Equation WW12 or WW13, as applicable. Compliance is demonstrated if the AMR is greater than or equal to the RMR.

(g) *Open or closed aerobic biological treatment processes: 95-percent mass removal option.* This paragraph applies to performance tests that are conducted for open or closed aerobic biological treatment processes to demonstrate compliance with the 95-percent mass removal provisions for Table 8 and/or Table 9 compounds. This compliance option is specified in § 63.138(g) of this subpart. The RMR for this option is 95-percent mass removal. The owner or operator shall comply with the requirements specified in § 63.145(g)(1) to determine AMR, § 63.145 (e)(3)(ii) and (e)(4)(ii) to determine RMR, and (g)(2) of this subpart to determine whether compliance has been demonstrated. Some compounds may not require a performance test. Refer to § 63.145(h) and table 36 of this subpart to determine which compounds may be exempt from the requirements of this paragraph. (Wastewater streams that are Group 1 for both Table 8 and Table 9 compounds need only do the compliance demonstration for Table 9 compounds.)

(1) The owner or operator shall comply with the requirements specified in paragraphs (f)(1), (f)(2), and (f)(5) of this section to determine AMR. References to Group 1 wastewater streams shall be deemed Group 1 and Group 2 wastewater streams for the purposes of this paragraph.

(2) *Compare RMR to AMR.* Compliance is demonstrated if the AMR is greater than or equal to RMR.

(h) *Site-specific fraction biodegraded* (F_{bio}). The compounds listed in table 9 of this subpart are divided into three sets for the purpose of determining whether F_{bio} must be determined, and if F_{bio} must be determined, which procedures may be used to determine compound-specific kinetic parameters. These sets are designated as lists 1, 2, and 3 in table 36 of this subpart.

(1) *Performance test exemption.* If a biological treatment process meets the requirements specified in paragraphs (h)(1)(i) and (h)(1)(ii) of this section, the owner or operator is not required to determine F_{bio} and is exempt from the applicable performance test requirements specified in § 63.138 of this subpart.

(i) The biological treatment process meets the definition of ''enhanced biological treatment process'' in § 63.111 of this subpart.

(ii) At least 99 percent by weight of all compounds on table 36 of this subpart that are present in the aggregate of all wastewater streams using the biological treatment process to comply with § 63.138 of this subpart are compounds on list 1 of table 36 of this subpart.

(2) F_{bio} *determination.* For wastewater streams that include one or more compounds on lists 2 and/or 3 of table 36 of this subpart that do not meet criteria in paragraph (h)(1)(ii) of this section, the owner or operator shall determine F_{bio} for the biological treatment process using the procedures in appendix C to part 63, and paragraph (h)(2)(i) or (h)(2)(ii) of this section. For biological treatment processes that do not meet the definition for enhanced biological treatment in § 63.111 of this subpart, the owner or operator shall determine the F_{bio} for the biological treatment process using any of the procedures in appendix C to part 63, except the batch tests procedure.

(i) *Wastewater streams without list 3 compounds that are treated in enhanced biological treatment processes.* For wastewater streams that include no compounds on list 3 of table 36 of this subpart and the biological treatment process meets the definition of enhanced biological treatment process in § 63.111 of this subpart, the owner or operator shall determine f_{bio} for the list 2 compounds using any of the procedures specified in appendix C of 40 CFR part 63. (The symbol ''f_{bio}'' represents the site specific fraction of an individual Table 8 or Table 9 compound that is biodegraded.) The owner or operator shall calculate f_{bio} for the list 1 compounds using the defaults for first order biodegradation rate constants (K_1) in table 37 of subpart G and follow the procedure explained in Form III of appendix C, 40 CFR part 63, or any of the procedures specified in appendix C, 40 CFR part 63.

(ii) *Wastewater streams with list 3 compounds that are treated in enhanced biological treatment processes.* For wastewater streams that include one or more compounds on list 3 of table 36 of this subpart, the owner or operator shall determine f_{bio} for the list 3 compounds using any of the procedures specified in appendix C, 40 CFR part 63, except the batch tests procedure. The owner or operator shall determine f_{bio} for the list 2 compounds using any of the procedures specified in appendix C, 40 CFR part 63. The owner or operator shall calculate f_{bio} for the list 1 compounds using the defaults for first order biodegradation rate constants (K_1) in table 37 of subpart G and follow the procedure explained in Form III of appendix C, 40 CFR part 63, or any of the procedures specified in appendix C, of 40 CFR part 63.

(iii) *Performance tests for control devices other than flares.* This paragraph applies to performance tests that are conducted to demonstrate compliance of a control device with the efficiency limits specified in § 63.139(c). If complying with the 95-percent reduction efficiency requirement, comply with the requirements specified in paragraphs (i)(1) through (i)(9) of this section. If complying with the 20 ppm by volume requirement, comply with the requirements specified in paragraphs (i)(1) through (i)(6) and (i)(9) of this section. The 20 ppm by volume limit or 95 percent reduction efficiency requirement shall be measured as either total organic hazardous air pollutants or as TOC minus methane and ethane.

(1) *Sampling sites.* Sampling sites shall be selected using Method 1 or 1A of 40 CFR part 60, appendix A, as appropriate. For determination of compliance with the 95 percent reduction requirement, sampling sites shall be located at the inlet and the outlet of the control device. For determination of compliance with the 20 parts per million by volume limit, the sampling site shall be located at the outlet of the control device.

(2) *Concentration in gas stream entering or exiting the control device.* The concentration of total organic hazardous air pollutants or TOC in a gas stream shall be determined as provided in this paragraph. Samples may be grab samples or composite samples (i.e., integrated samples). Samples shall be taken at approximately equally spaced time intervals over a 1-hour period. Each 1-hour period constitutes a run, and the performance test shall consist of a minimum of 3 runs. Concentration measurements shall be determined using Method 18 of 40 CFR part 60, appendix A. Alternatively, any other test method validated according to the procedures in Method 301 of appendix A of this part may be used.

(3) *Volumetric flow rate of gas stream entering or exiting the control device.* The volumetric flow rate of the gas stream shall be determined using Method 2, 2A, 2C, or 2D of 40 CFR part 60, appendix A, as appropriate. Volumetric flow rate measurements shall be taken at the same time as the concentration measurements.

(4) *Calculation of TOC concentration.* The TOC concentration (CG_T) is the sum of the concentrations of the individual components. If compliance is being determined based on TOC, the owner or operator shall compute TOC for each run using the following equation:

$$CG_T = \frac{1}{m}\sum_{j=1}^{m}\left(\sum_{i=1}^{n} CGS_{i,j}\right) \qquad \text{(Eqn WW14)}$$

Where:

CG_T=Total concentration of TOC (minus methane and ethane) in vented gas stream, average of samples, dry basis, parts per million by volume.

$CGS^{i,j}$=Concentration of sample components in vented gas stream for sample j, dry basis, parts per million by volume.

i=Identifier for a compound.

n=Number of components in the sample.

j=Identifier for a sample.

m=Number of samples in the sample run.

(5) *Calculation of total organic hazardous air pollutants concentration.* The owner or operator determining compliance based on total organic hazardous air pollutants concentration (C_{HAP}) shall compute C_{HAP} according to the Equation WW14, except that only Table 9 compounds shall be summed.

(6) *Percent oxygen correction for combustion control devices.* If the control device is a combustion device, comply with the requirements specified in paragraph (i)(6)(i) of this section to determine oxygen concentration, and in paragraph (i)(6)(ii) of this section to calculate the percent oxygen correction.

(i) *Oxygen concentration.* The concentration of TOC or total organic hazardous air pollutants shall be corrected to 3 percent oxygen if the control device is a combustion device. The emission rate correction factor for excess air, composite sampling (i.e., integrated sampling) and analysis procedures of Method 3B of 40 CFR part 60, appendix A shall be used to determine the actual oxygen concentration ($\%0_{2d}$). The samples shall be taken during the same time that the TOC (minus methane or ethane) or total organic hazardous air pollutants samples are taken.

(ii) *3 percent oxygen calculation.* The concentration corrected to 3 percent oxygen (CG_c), when required, shall be computed using the following equation:

$$CG_C = CG_T\left(\frac{17.9}{20.9 - \%0_{2d}}\right) \qquad \text{(Eqn WW15)}$$

Where:

CG_c=Concentration of TOC or organic hazardous air pollutants corrected to 3 percent oxygen, dry basis, parts per million by volume.

CG_T=Total concentration of TOC (minus methane and ethane) in vented gas stream, average of samples, dry basis, parts per million by volume.

$\%0_{2d}$=Concentration of oxygen measured in vented gas stream, dry basis, percent by volume.

(7) *Mass rate calculation.* The mass rate of either TOC (minus methane and ethane) or total organic hazardous air pollutants shall be calculated using the following equations. Where the mass rate of TOC is being calculated, all organic compounds (minus methane and ethane) measured by methods specified in paragraph (i)(2) of this section are summed using Equations WW16 and WW17. Where the mass rate of total organic hazardous air pollutants is being calculated, only Table 9 compounds shall be summed using Equations WW16 and WW17.

$$QMG_a = K_2\left(\sum_{i=1}^{n} CG_{a,i}\ MW_i\right)QG_a \qquad \text{(Eqn WW16)}$$

$$QMG_b = K_2\left(\sum_{i=1}^{n} CG_{b,i}\ MW_i\right)QG_b \qquad \text{(Eqn WW17)}$$

Where:

$CG_{a,i}$, $CG_{b,i}$=Concentration of TOC (minus methane and ethane) or total organic hazardous air pollutants, in vented gas stream, entering ($CG_{a,i}$) and exiting ($CG_{b,i}$) the control device, dry basis, parts per million by volume.

QMG_a, QMG_b=Mass rate of TOC (minus methane and ethane) or total organic hazardous air pollutants, in vented gas stream, entering (QMG_a) and exiting (QMG_b) the control device, dry basis, kilograms per hour.

MW_i=Molecular weight of a component, kilogram/kilogram-mole.

QG_a, QG_b=Flow rate of gas stream entering (QG_a) and exiting (QG_b) the control device, dry standard cubic meters per hour.

K_2=Constant, 41.57 x 10^{-9} (parts per million)$^{-1}$ (gram-mole per standard cubic meter) (kilogram/gram), where standard temperature (gram-mole per standard cubic meter) is 20° Celsius.

i=Identifier for a compound.

n=Number of components in the sample.

(8) *Percent reduction calculation.* The percent reduction in TOC (minus methane and ethane) or total organic hazardous air pollutants shall be calculated as follows:

$$E = \frac{QMG_a - QMG_b}{QMG_a}(100\%) \qquad \text{(Eqn WW18)}$$

Where:

E=Destruction efficiency of control device, percent.

QMG_a, QMG_b=Mass rate of TOC (minus methane and ethane) or total organic hazardous air pollutants, in vented gas stream entering and exiting (QMG_b) the control device, dry basis, kilograms per hour.

(9) *Compare mass destruction efficiency to required efficiency.* If complying with the 95 percent reduction efficiency requirement, compliance is demonstrated if the mass destruction efficiency (calculated in Equation WW18) is 95 percent or greater. If complying with the 20 parts per million by volume limit in § 63.139 (c)(1)(ii) of this subpart, compliance is demonstrated if the outlet total organic compound concentration, less methane and ethane, or total organic hazardous

air pollutants concentration is 20 parts per million by volume, or less. For combustion control devices, the concentration shall be calculated on a dry basis, corrected to 3 percent oxygen.

(j) *Compliance demonstration for flares.* When a flare is used to comply with § 63.139 (c) of this subpart, the owner or operator shall comply with the flare provisions in § 63.11(b) of subpart A of this part.

(1) The compliance determination shall be conducted using Method 22 of 40 CFR part 60, appendix A, to determine visible emissions.

(2) An owner or operator is not required to conduct a performance test to determine percent emission reduction or outlet organic hazardous air pollutants or TOC concentration when a flare is used.

§ 63.146 Process wastewater provisions—reporting.

(a) For each waste management unit, treatment process, or control device used to comply with §§ 63.138 (b)(1), (c)(1), (d), (e), (f), or (g) of this subpart for which the owner or operator seeks to monitor a parameter other than those specified in table 11, table 12, or table 13 of this subpart, the owner or operator shall submit a request for approval to monitor alternative parameters according to the procedures specified in § 63.151(f) or (g) of this subpart.

(b) The owner or operator shall submit the information specified in paragraphs (b)(1) through (b)(9) of this section as part of the Notification of Compliance Status required by § 63.152(b) of this subpart.

(1) [Reserved]

(2) For each new and existing source, the owner or operator shall submit the information specified in table 15 of this subpart for Table 8 and/or Table 9 compounds.

(3) [Reserved]

(4) For each treatment process identified in table 15 of this subpart that receives, manages, or treats a Group 1 wastewater stream or residual removed from a Group 1 wastewater stream, the owner or operator shall submit the information specified in table 17 of this subpart.

(5) For each waste management unit identified in table 15 of this subpart that receives or manages a Group 1 wastewater stream or residual removed from a Group 1 wastewater stream, the owner or operator shall submit the information specified in table 18 of this subpart.

(6) For each residual removed from a Group 1 wastewater stream, the owner or operator shall report the information specified in table 19 of this subpart.

(7) For each control device used to comply with §§ 63.133 through 63.139 of this subpart, the owner or operator shall report the information specified in paragraphs (b)(7)(i) and (b)(7)(ii) of this section.

(i) For each flare, the owner or operator shall submit the information specified in paragraphs (b)(7)(i)(A) through (b)(7)(i)(C) of this section.

(A) Flare design (i.e., steam-assisted, air-assisted, or non-assisted);

(B) All visible emission readings, heat content determinations, flow rate measurements, and exit velocity determinations made during the compliance determination required by § 63.139(c)(3) of this subpart; and

(C) Reports of the times and durations of all periods during the compliance determination when the pilot flame is absent or the monitor is not operating.

(ii) For each control device other than a flare, the owner or operator shall submit the information specified in paragraph (b)(7)(ii)(A) of this section and in either paragraph (b)(7)(ii)(B) or (b)(7)(ii)(C) of this section.

(A) The information on parameter ranges specified in § 63.152(b)(2) of this subpart for the applicable parameters specified in table 13 of this subpart, unless the parameter range has already been established in the operating permit; and either

(B) The design evaluation specified in § 63.139(d)(2) of this subpart; or

(C) Results of the performance test specified in § 63.139(d)(1) of this subpart. Performance test results shall include operating ranges of key process and control parameters during the performance test; the value of each parameter being monitored in accordance with § 63.143 of this subpart; and applicable supporting calculations.

(8) For each treatment process used to comply with § 63.138 (b)(1)(iii)(C), (c)(1)(iii)(D), (d), or (e) of this subpart, the owner or operator shall submit the information specified in paragraphs (b)(8)(i) and (b)(8)(ii) of this section.

(i) For Items 1 and 2 in table 12 of this subpart, the owner or operator shall submit the information specified in paragraphs (b)(8)(i)(A) and (b)(8)(i)(B) of this section.

(A) The information on parameter ranges specified in § 63.152(b)(2) of this subpart for the parameters approved by the Administrator, unless the parameter range has already been established in the operating permit.

(B) Results of the initial measurements of the parameters approved by the Administrator and any applicable supporting calculations.

(ii) For Item 3 in table 12 of this subpart, the owner or operator shall submit the information on parameter ranges specified in § 63.152(b)(2) of this subpart for the parameters specified in Item 3 of table 12 of this subpart, unless the parameter range has already been established in the operating permit.

(9) Except as provided in paragraph (b)(9)(iii) of this section, for each waste management unit or treatment process used to comply with § 63.138(b)(1), (c)(1), (d), (e), (f), (g), or (h)(3) of this subpart, the owner or operator shall submit the information specified in either paragraph (b)(9)(i) or (b)(9)(ii) of this section.

(i) The design evaluation and supporting documentation specified in § 63.138(j)(1) of this subpart.

(ii) Results of the performance test specified in § 63.138(j)(2) of this subpart. Performance test results shall include operating ranges of key process and control parameters during the performance test; the value of each parameter being monitored in accordance with § 63.143 of this subpart; and applicable supporting calculations.

(iii) If the owner or operator elects to use one of the technologies specified in § 63.138(h) of this subpart, the owner or operator is exempt from the requirements specified in paragraphs (b)(9)(i) and (b)(9)(ii) of this section.

(c) For each waste management unit that receives, manages, or treats a Group 1 wastewater stream or residual removed from a Group 1 wastewater stream, the owner or operator shall submit as part of the next Periodic Report required by § 63.152(c) of this subpart the results of each inspection required by § 63.143(a) of this subpart in which a control equipment failure was identified. Control equipment failure is defined for each waste management unit in §§ 63.133 through 63.137 of this subpart. Each Periodic Report shall include the date of the inspection, identification of each waste management unit in which a control equipment failure was detected, description of the failure, and description of the nature of and date the repair was made.

(d) Except as provided in paragraph (f) of this section, for each treatment process used to comply with § 63.138(b)(1), (c)(1), or (e) of this subpart, the owner or operator shall submit as part of the next Periodic Report required by § 63.152(c) the information specified in paragraphs (d)(1), (d)(2), and (d)(3) of this section for the monitoring required by § 63.143(b) of this subpart.

(1) For Item 1 in table 12, the owner or operator shall submit the results of measurements that indicate that the biological treatment unit is outside the range established in the Notification of Compliance Status or operating permit.

(2) For Item 2 in table 12, the owner or operator shall submit the monitoring results for each operating day during which the daily average value of a continuously monitored parameter is outside the range established in the Notification of Compliance Status or operating permit.

(3) For Item 3 in table 12 of this subpart, the owner or operator shall submit the monitoring results for each operating day during which the daily average value of any monitored parameter approved in accordance with § 63.151 (f) was outside the range established in the Notification of Compliance Status or operating permit.

(e) Except as provided in paragraph (f) of this section, for each control device used to comply with §§ 63.133 through 63.139 of this subpart, the owner or operator shall submit as part of the next Periodic Report required by § 63.152(c) of this subpart the information specified in either paragraph (e)(1) or (e)(2) of this section.

(1) The information specified in table 20 of this subpart, or

(2) If the owner or operator elects to comply with § 63.143(e)(2) of this subpart, i.e., an organic monitoring device installed at the outlet of the control device, the owner or operator shall submit the monitoring results for each operating day during which the daily average concentration level or reading is outside the range established in the Notification of Compliance Status or operating permit.

(f) Where the owner or operator obtains approval to use a treatment process or control device other than one for which monitoring requirements are specified in § 63.143 of this subpart, or to monitor parameters other than those specified in table 12 or 13 of this subpart, the Administrator will specify appropriate reporting requirements.

(g) If an extension is utilized in accordance with § 63.133(e)(2) or § 63.133(h) of this subpart, the owner or operator shall include in the next periodic report the information specified in § 63.133 (e)(2) or § 63.133(h).

§ 63.147 Process wastewater provisions—recordkeeping.

(a) The owner or operator transferring a Group 1 wastewater stream or residual removed from a Group 1 wastewater stream in accordance with § 63.132(g) of this subpart shall keep a record of the notice sent to the treatment operator stating that the wastewater stream or residual contains organic hazardous air pollutants which are required to be managed and treated in accordance with the provisions of this subpart.

(b) The owner or operator shall keep in a readily accessible location the records specified in paragraphs (b)(1) through (b)(7) of this section.

(1) A record that each waste management unit inspection required by §§ 63.133 through 63.137 of this subpart was performed.

(2) A record that each inspection for control devices required by § 63.139 of this subpart was performed.

(3) A record of the results of each seal gap measurement required by §§ 63.133(d) and 63.137(c) of this subpart. The records shall include the date of the measurement, the raw data obtained in the measurement, and the calculations described in § 63.120(b)(2), (3), and (4) of this subpart.

(4) For Item 1 and Item 2 of table 12 of this subpart, the owner or operator shall keep the records approved by the Administrator.

(5) Except as provided in paragraphs (e) and (g) of this section, continuous records of the monitored parameters specified in Item 3 of table 12 and table 13 of this subpart, and in § 63.143(e)(2) of this subpart.

(6) Documentation of a decision to use an extension, as specified in § 63.133(e)(2) or (h) of this subpart, which shall include a description of the failure, documentation that alternate storage capacity is unavailable, and specification of a schedule of actions that will ensure that the control equipment will be repaired or the vessel will be emptied as soon as practical.

(7) Documentation of a decision to use a delay of repair due to unavailability of parts, as specified in § 63.140(c), shall include a description of the failure, the reason additional time was necessary (including a statement of why replacement parts were not kept on site and when the manufacturer promised delivery), and the date when repair was completed.

(c) For each boiler or process heater used to comply with §§ 63.133 through 63.139 of this subpart, the owner or operator shall keep a record of any changes in the location at which the vent stream is introduced into the flame zone as required in § 63.139(c)(1) of this subpart.

(d) The owner or operator shall keep records of the daily average value of each continuously monitored parameter for each operating day as specified in § 63.152(f), except as provided in paragraphs (d)(1) and (d)(2) of this section.

(1) For flares, records of the times and duration of all periods during which the pilot flame is absent shall be kept rather than daily averages.

(2) For carbon adsorbers, the owner or operator shall keep the records specified in paragraphs (d)(2)(i) and (d)(2)(ii) of this section instead of daily averages.

(i) Records of the total regeneration stream mass flow for each carbon bed regeneration cycle.

(ii) Records of the temperature of the carbon bed after each regeneration cycle.

(e) Where the owner or operator obtains approval to use a control device other than one for which monitoring requirements are specified in § 63.143 of this subpart, or to monitor parameters other than those specified in table 12 or table 13 of this subpart, the Administrator will specify appropriate recordkeeping requirements.

(f) If the owner or operator uses process knowledge to determine the annual average concentration of a wastewater stream as specified in § 63.144(b)(3) of this subpart and/or uses process knowledge to determine the annual average flow rate as specified in § 63.144(c)(1) of this subpart, and determines that the wastewater stream is not a Group 1 wastewater stream, the owner or operator shall keep in a readily accessible location the documentation of how process knowledge was used to determine the annual average concentration and/or the annual average flow rate of the wastewater stream.

27. Section 63.148 is amended by revising paragraphs (c)(2), (c)(4)(ii), (c)(5), (i)(3)(i), (i)(3)(ii), and (j)(2) to read as follows:

§ 63.148 Leak inspection provisions.

* * * * *

(c) * * *

(2)(i) Except as provided in paragraph (c)(2)(ii) of this section, the detection instrument shall meet the performance criteria of Method 21 of 40 CFR part 60, appendix A, except the instrument response factor criteria in section 3.1.2(a) of Method 21 shall be for the average composition of the process fluid not each individual volatile organic compound in the stream. For process streams that contain nitrogen, air, or other inerts which are not organic hazardous air pollutants or volatile organic compounds, the average stream response factor shall be calculated on an inert-free basis.

(ii) If no instrument is available at the plant site that will meet the performance criteria specified in paragraph (c)(2)(i) of this section, the

instrument readings may be adjusted by multiplying by the average response factor of the process fluid, calculated on an inert-free basis as described in paragraph (c)(2)(i) of this section.

* * * * *

(4) * * *

(ii) Mixtures of methane in air at a concentration less than 10,000 parts per million. A calibration gas other than methane in air may be used if the instrument does not respond to methane or if the instrument does not meet the performance criteria specified in paragraph (b)(2)(i) of this section. In such cases, the calibration gas may be a mixture of one or more of the compounds to be measured in air.

(5) An owner or operator may elect to adjust or not adjust instrument readings for background. If an owner or operator elects to not adjust readings for background, all such instrument readings shall be compared directly to the applicable leak definition to determine whether there is a leak. If an owner or operator elects to adjust instrument readings for background, the owner or operator shall measure background concentration using the procedures in §§ 63.180(b) and (c) of subpart H of this part. The owner or operator shall subtract background reading from the maximum concentration indicated by the instrument.

* * * * *

(i) * * *

(3) * * *

(i) Hourly records of whether the flow indicator specified under paragraph (f)(1) of this section was operating and whether a diversion was detected at any time during the hour, as well as records of the times of all periods when the vent stream is diverted from the control device or the flow indicator is not operating.

(ii) Where a seal mechanism is used to comply with paragraph (f)(2) of this section, hourly records of flow are not required. In such cases, the owner or operator shall record whether the monthly visual inspection of the seals or closure mechanisms has been done, and shall record the occurrence of all periods when the seal mechanism is broken, the bypass line valve position has changed, or the key for a lock-and-key type configuration has been checked out, and records of any car-seal that has broken.

* * * * *

(j) * * *

(2) Reports of the times of all periods recorded under paragraph (i)(3)(i) of this section when the vent stream is diverted from the control device through a bypass line; and

* * * * *

28. Section 63.149 is added to read as follows:

§ 63.149 Control requirements for certain liquid streams in open systems within a chemical manufacturing process unit.

(a) The owner or operator shall comply with the provisions of table 35 of this subpart, for each item of equipment meeting all the criteria specified in paragraphs (b) through (d) and either paragraph (e)(1) or (e)(2) of this section.

(b) The item of equipment is of a type identified in table 35 of this subpart;

(c) The item of equipment is part of a chemical manufacturing process unit that meets the criteria of § 63.100(b) of subpart F of this part;

(d) The item of equipment is controlled less stringently than in table 35 and is not listed in § 63.100(f) of subpart F of this part, and the item of equipment is not otherwise exempt from controls by the provisions of subparts A, F, G, or H of this part; and

(e) The item of equipment:

(1) is a drain, drain hub, manhole, lift station, trench, pipe, or oil/water separator that conveys water with a total annual average concentration greater than or equal to 10,000 parts per million by weight of Table 9 compounds at any flowrate; or a total annual average concentration greater than or equal to 1,000 parts per million by weight of Table 9 compounds at an annual average flow rate greater than or equal to 10 liters per minute. At a chemical manufacturing process unit subject to the new source requirements of 40 CFR 63.100(l)(1) or 40 CFR 63.100(l)(2), the criteria of this paragraph are also met if the item of equipment conveys water with an annual average concentration greater than or equal to 10 parts per million by weight of any Table 8 compound at an annual average flow rate greater than or equal to 0.02 liter per minute, or

(2) Is a tank that receives one or more streams that contain water with a total annual average concentration greater than or equal to 1,000 ppm (by weight) of Table 9 compounds at an annual average flowrate greater than or equal to 10 liters per minute. At a chemical manufacturing process unit subject to the new source requirements of 40 CFR 63.100(l)(1) or 40 CFR 63.100 (l)(2), the criteria of this paragraph are also met if the tank receives one or more streams that contain water with an annual average concentration greater than or equal to 10 parts per million by weight of any Table 8 compound at an annual average flow rate greater than or equal to 0.02 liter per minute. The owner or operator of the source shall determine the characteristics of the stream as specified in paragraphs (e)(2) (i) and (ii) of this section.

(i) The characteristics of the stream being received shall be determined at the inlet to the tank.

(ii) The characteristics shall be determined according to the procedures in § 63.144 (b) and (c).

29. Section 63.152 is amended by revising the introductory text of paragraph (b)(1); revising paragraph (b)(2) introductory text and paragraphs (b)(2)(ii)(A) and (b)(2)(ii)(B); adding paragraph (b)(5); revising the introductory text of paragraphs (c)(2), (c)(2)(ii), and (c)(2)(ii)(A); revising paragraphs (c)(2)(ii)(A)(*2*) and (c)(2)(ii)(A)(*3*); revising the introductory text of paragraph (c)(2)(ii)(B); revising paragraphs (c)(2)(ii)(C) and (c)(2)(ii)(E); adding paragraph (c)(2)(iv); revising the introductory text of paragraph (c)(4); revising paragraph (c)(4)(iii) and adding paragraph (c)(4)(iv); adding a sentence to the end of paragraphs (c)(5)(iii) and (c)(6)(v); revising the introductory text of paragraph (f), revising paragraph (f)(2)(ii), revising the introductory text of paragraph (f)(5), revising paragraph (f)(7); and adding paragraph (g) to read as follows:

§ 63.152 General reporting and continuous records.

* * * * *

(b) * * *

(1) The notification shall include the results of any emission point group determinations, performance tests, inspections, continuous monitoring system performance evaluations, values of monitored parameters established during performance tests, and any other information used to demonstrate compliance or required to be included in the Notification of Compliance Status under § 63.110 (h) for regulatory overlaps, under § 63.117 for process vents, § 63.122 for storage vessels, § 63.129 for transfer operations, § 63.146 for process wastewater, and § 63.150 for emission points included in an emissions average.

* * * * *

(2) For each monitored parameter for which a range is required to be established under § 63.114 for process vents, § 63.127 for transfer, § 63.143 for process wastewater, § 63.150(m) for emission points in emissions averages, or § 63.151(f), or § 63.152(e), the Notification of Compliance Status shall include the information in paragraphs (b)(2)(i), (b)(2)(ii), and (b)(2)(iii) of this section, unless the range and the

operating day definition have been established in the operating permit. The recordkeeping and reporting requirements applicable to storage vessels are located in §§ 63.122 and 63.123.

* * * * *

(ii) * *

(A) If a performance test is required by this subpart for a control device, the range shall be based on the parameter values measured during the performance test and may be supplemented by engineering assessments and/or manufacturer's recommendations. Performance testing is not required to be conducted over the entire range of permitted parameter values.

(B) If a performance test is not required by this subpart for a control device, the range may be based solely on engineering assessments and/or manufacturer's recommendations.

* * * * *

(5) An owner or operator who transfers a Group 1 wastewater stream or residual removed from a Group 1 wastewater stream for treatment pursuant to § 63.132(g) shall include in the Notification of Compliance Status the name and location of the transferee and a description of the Group 1 wastewater stream or residual sent to the treatment facility.

(c) * * *

(2) Except as provided in paragraph (c)(2)(iv) of this section, for an owner or operator of a source complying with the provisions of §§ 63.113 through 63.147 for any emission points, Periodic Reports shall include all information specified in §§ 63.117 and 63.118 for process vents, § 63.122 for storage vessels, §§ 63.129 and 63.130 for transfer operations, and § 63.146 for process wastewater, including reports of periods when monitored parameters are outside their established ranges.

* * * * *

(ii) The parameter monitoring data for Group 1 emission points and emission points included in emissions averages that are required to perform continuous monitoring shall be used to determine compliance with the required operating conditions for the monitored control devices or recovery devices. For each excursion, except for excused excursions, the owner or operator shall be deemed to have failed to have applied the control in a manner that achieves the required operating conditions.

(A) An excursion means any of the three cases listed in paragraph (c)(2)(ii)(A)(*1*), (c)(2)(ii)(A)(*2*), or (c)(2)(ii)(A)(*3*) of this section. For a control device or recovery device where multiple parameters are monitored, if one or more of the parameters meets the excursion criteria in paragraph (c)(2)(ii)(A)(*1*), (c)(2)(ii)(A)(*2*), or (c)(2)(ii)(A)(*3*) of this section, this is considered a single excursion for the control device or recovery device.

* * * * *

(*2*) When the period of control device or recovery device operation is 4 hours or greater in an operating day and monitoring data are insufficient to constitute a valid hour of data for at least 75 percent of the operating hours.

(*3*) When the period of control device or recovery device operation is less than 4 hours in an operating day and more than one of the hours during the period of operation does not constitute a valid hour of data due to insufficient monitoring data.

* * * * *

(B) The number of excused excursions for each control device or recovery device for each semiannual period is specified in paragraphs (c)(2)(ii)(B)(*1*) through (c)(2)(ii)(B)(*6*) of this section. This paragraph applies to sources required to submit Periodic Reports semiannually or quarterly. The first semiannual period is the 6-month period starting the date the Notification of Compliance Status is due.

* * * * *

(C) If a monitored parameter is outside its established range or monitoring data are not collected during periods of start-up, shutdown, or malfunction (and the source is operated during such periods in accordance with the source's start-up, shutdown, and malfunction plan as required by § 63.6(e)(3) of subpart A of this part) or during periods of nonoperation of the chemical manufacturing process unit or portion thereof (resulting in cessation of the emissions to which the monitoring applies), then the excursion is not a violation and, in cases where continuous monitoring is required, the excursion does not count toward the number of excused excursions for determining compliance.

* * * * *

(E) Paragraph (c)(2)(ii) of this section, except paragraph (c)(2)(ii)(C) of this section, shall apply only to emission points and control devices or recovery devices for which continuous monitoring is required by §§ 63.113 through 63.150.

* * * * *

(iv) The provisions of paragraphs (c)(2), (c)(2)(i), (c)(2)(ii), and (c)(2)(iii) of this section do not apply to any storage vessel for which the owner or operator is not required, by the applicable monitoring plan established under § 63.120(d)(2), to keep continuous records. If continuous records are required, the owner or operator shall specify, in the monitoring plan, whether the provisions of paragraphs (c)(2), (c)(2)(i), (c)(2)(ii), and (c)(2)(iii) of this section apply.

* * * * *

(4) Periodic Reports shall include the information in paragraphs (c)(4)(i) through (c)(4)(iv) of this section, as applicable:

* * * * *

(iii) Notification if any Group 2 emission point becomes a Group 1 emission point, including a compliance schedule as required in § 63.100 of subpart F of this part, and

(iv) For process wastewater streams sent for treatment pursuant to § 63.132 (g), reports of changes in the identity of the treatment facility or transferee.

* * * * *

(5) * * *

(iii) * * * For storage vessels to which the provisions of paragraphs (c)(2)(i) through (c)(2)(iii) of this section do not apply (as specified in paragraph (c)(2)(iv) of this section), the owner or operator is required to comply with the provisions of the applicable monitoring plan, and monitoring records may be used to determine compliance.

* * * * *

(6) * * *

(v) Paragraphs (c)(2)(i) through (c)(2)(iii) of this section shall govern the use of monitoring data to determine compliance for Group 1 emission points. For storage vessels to which the provisions of paragraphs (c)(2)(i) through (c)(2)(iii) of this section do not apply (as specified in paragraph (c)(2)(iv) of this section), the owner or operator is required to comply with the provisions of the applicable monitoring plan, and monitoring records may be used to determine compliance.

* * * * *

(f) Owners or operators required to keep continuous records by §§ 63.118, 63.130, 63.147, 63.150, or other sections of this subpart shall keep records as specified in paragraphs (f)(1) through (f)(7) of this section, unless an alternative recordkeeping system has been requested and approved under § 63.151(f) or (g) or § 63.152(e) or under § 63.8(f) of subpart A of this part, and except as provided in paragraph (c)(2)(ii)(C) of this section or in paragraph (g) of this section. If a monitoring plan for storage vessels pursuant to § 63.120(d)(2)(i) requires continuous records, the monitoring plan shall specify which provisions, if any, of

paragraphs (f)(1) through (f)(7) of this section apply.

* * * * *

(2) * * *

(ii) Block average values for 15-minute or shorter periods calculated from all measured data values during each period or at least one measured data value per minute if measured more frequently than once per minute.

* * * * *

(5) Daily average values of each continuously monitored parameter shall be calculated for each operating day, and retained for 5 years, except as specified in paragraphs (f)(6) and (f)(7) of this section.

* * * * *

(7) Monitoring data recorded during periods identified in paragraphs (f)(7)(i) through (f)(7)(v) of this section shall not be included in any average computed under this subpart. Records shall be kept of the times and durations of all such periods and any other periods during process or control device operation when monitors are not operating.

(i) Monitoring system breakdowns, repairs, calibration checks, and zero (low-level) and high-level adjustments;

(ii) Start-ups;

(iii) Shutdowns;

(iv) Malfunctions;

(v) Periods of non-operation of the chemical manufacturing process unit (or portion thereof), resulting in cessation of the emissions to which the monitoring applies.

(g) For any parameter with respect to any item of equipment, the owner or operator may implement the recordkeeping requirements in paragraph (g)(1) or (g)(2) of this section as alternatives to the continuous operating parameter monitoring and recordkeeping provisions listed in §§ 63.114, 63.117, and 63.118 for process vents, §§ 63.127, 63.129, and 63.130 for transfer operations, §§ 63.143, 63.146, and 63.147 for wastewater, and/or § 63.152(f), except that § 63.152(f)(7) shall apply. The owner or operator shall retain each record required by paragraph (g)(1) or (g)(2) of this section as provided in § 63.103(c) of subpart F of this part, except as provided otherwise in paragraph (g)(1) or (g)(2) of this section.

(1) The owner or operator may retain only the daily average value, and is not required to retain more frequent monitored operating parameter values, for a monitored parameter with respect to an item of equipment, if the requirements of paragraphs (g)(1)(i) through (g)(1)(vi) of this section are met. An owner or operator electing to comply with the requirements of paragraph (g)(1) of this section shall notify the Administrator in the Notification of Compliance Status or, if the Notification of Compliance Status has already been submitted, in the periodic report immediately preceding implementation of the requirements of paragraph (g)(1) of this section.

(i) The monitoring system is capable of detecting unrealistic or impossible data during periods of operation other than startups, shutdowns, or malfunctions (e.g., a temperature reading of −200° C on a boiler), and will alert the operator by alarm or other means. The owner or operator shall record the occurrence. All instances of the alarm or other alert in an operating day constitute a single occurrence.

(ii) The monitoring system generates, updated at least hourly throughout each operating day, a running average of the monitoring values that have been obtained during that operating day, and the capability to observe this average is readily available to the Administrator on-site during the operating day. The owner or operator shall record the occurrence of any period meeting the criteria in paragraphs (g)(1)(ii)(A) through (g)(1)(iii)(C) of this section. All instances in an operating day constitute a single occurrence.

(A) The running average is above the maximum or below the minimum established limits;

(B) The running average is based on at least 6 1-hour average values; and

(C) The running average reflects a period of operation other than a startup, shutdown, or malfunction.

(iii) The monitoring system is capable of detecting unchanging data during periods of operation other than startups, shutdowns, or malfunctions, except in circumstances where the presence of unchanging data is the expected operating condition based on past experience (e.g., pH in some scrubbers), and will alert the operator by alarm or other means. The owner or operator shall record the occurrence. All instances of the alarm or other alert in an operating day constitute a single occurrence.

(iv) The monitoring system will alert the owner or operator by an alarm or other means, if the running average parameter value calculated under paragraph (g)(1)(ii) of this section reaches a set point that is appropriately related to the established limit for the parameter that is being monitored.

(v) The owner or operator shall verify the proper functioning of the monitoring system, including its ability to comply with the requirements of paragraph (g)(1) of this section, at the times specified in paragraphs (g)(1)(v)(A) through (g)(1)(v)(C) of this section. The owner or operator shall document that the required verifications occurred.

(A) Upon initial installation.

(B) Annually after initial installation.

(C) After any change to the programming or equipment constituting the monitoring system, which might reasonably be expected to alter the monitoring system's ability to comply with the requirements of this section.

(vi) The owner or operator shall retain the records identified in paragraphs (g)(1)(vi) (A) through (C) of this section.

(A) Identification of each parameter, for each item of equipment, for which the owner or operator has elected to comply with the requirements of paragraph (g) of this section.

(B) A description of the applicable monitoring system(s), and of how compliance will be achieved with each requirement of paragraph (g)(1)(i) through (g)(1)(v) of this section. The description shall identify the location and format (e.g., on-line storage; log entries) for each required record. If the description changes, the owner or operator shall retain both the current and the most recent superseded description. The description, and the most recent superseded description, shall be retained as provided in § 63.103(c) of subpart F of this part, except as provided in paragraph (g)(1)(vi)(D) of this section.

(C) A description, and the date, of any change to the monitoring system that would reasonably be expected to affect its ability to comply with the requirements of paragraph (g)(1) of this section.

(D) Owners and operators subject to paragraph (g)(1)(vi)(B) of this section shall retain the current description of the monitoring system as long as the description is current, but not less than 5 years from the date of its creation. The current description shall, at all times, be retained on-site or be accessible from a central location by computer or other means that provides access within 2 hours after a request. The owner or operator shall retain the most recent superseded description at least until 5 years from the date of its creation. The superseded description shall be retained on-site (or accessible from a central location by computer that provides access within 2 hours after a request) at least 6 months after its creation. Thereafter, the superseded description may be stored off-site.

(2) If an owner or operator has elected to implement the requirements of paragraph (g)(1) of this section, and a period of 6 consecutive months has passed without an excursion as defined

in paragraph (g)(2)(iv) of this section, the owner or operator is no longer required to record the daily average value for that parameter for that unit of equipment, for any operating day when the daily average value is less than the maximum, or greater than the minimum established limit. With approval by the Administrator, monitoring data generated prior to the compliance date of this subpart shall be credited toward the period of 6 consecutive months, if the parameter limit and the monitoring was required and/or approved by the Administrator.

(i) If the owner or operator elects not to retain the daily average values, the owner or operator shall notify the Administrator in the next periodic report. The notification shall identify the parameter and unit of equipment.

(ii) If, on any operating day after the owner or operator has ceased recording daily averages as provided in paragraph (g)(2) of this section, there is an excursion as defined in paragraph (g)(2)(iv) of this section, the owner or operator shall immediately resume retaining the daily average value for each day, and shall notify the Administrator in the next periodic report. The owner or operator shall continue to retain each daily average value until another period of 6 consecutive months has passed without an excursion as defined in paragraph (g)(2)(iv) of this section.

(iii) The owner or operator shall retain the records specified in paragraphs (g)(1) (i), (ii), (iii), (iv), (v), and (vi) of this section. For any calendar week, if compliance with paragraphs (g)(1) (i), (ii), (iii), and (iv) of this section does not result in retention of a record of at least one occurrence or measured parameter value, the owner or operator shall record and retain at least one parameter value during a period of operation other than a startup, shutdown, or malfunction.

(iv) For purposes of paragraph (g) of this section, an excursion means that the daily average value of monitoring data for a parameter is greater than the maximum, or less than the minimum established value, except as provided in paragraphs (g)(2)(iv)(A) and (g)(2)(iv)(B) of this section.

(A) The daily average value during any start-up, shutdown, or malfunction shall not be considered an excursion for purposes of this paragraph (g)(2), if the owner or operator follows the applicable provisions of the startup, shutdown, and malfunction plan required by § 63.6(e)(3) of subpart A of this part.

(B) An excused excursion, as described in § 63.152(c)(2)(ii) (B) and (C), shall not be considered an excursion for purposes of this paragraph (g)(2).

30. The tables in the appendix to subpart G are amended by revising tables 3, 4, 7, 11, 12, and 13; removing and reserving tables 14a and 14b; removing tables 15a and 15b, and adding table 15; removing and reserving table 16; revising tables 17, 18, and 20; table 34 is amended by revising the F_m entry for chlorobenzene from ''0.96'' to ''1.00'', the F_m entry for isophorone from ''0.47'' to ''0.51,'' the F_m entry for trichloroethane (1,1,2-) (Vinyl trichloride) from ''0.98'' to ''1.00,'' and the F_m entry for trichlorophenol (2,4, 5-) from ''1.00'' to ''0.11''; and adding tables 35, 36, and 37 and by revising figure 1 and removing figures 2 through 10 to read as follows:

TABLE 3.—PROCESS VENTS—MONITORING, RECORDKEEPING, AND REPORTING REQUIREMENTS FOR COMPLYING WITH 98 WEIGHT-PERCENT REDUCTION OF TOTAL ORGANIC HAZARDOUS AIR POLLUTANTS EMISSIONS OR A LIMIT OF 20 Parts Per Million by Volume

Control device	Parameters to be monitored [a]	Recordkeeping and reporting requirements for monitored parameters
Thermal incinerator	Firebox temperature [b] [63.114(a)(1)(i)]	1. Continuous records.[c] 2. Record and report the firebox temperature averaged over the full period of the performance test—NCS.[d] 3. Record the daily average firebox temperature for each operating day.[e] 4. Report all daily average temperatures that are outside the range established in the NCS or operating permit and all operating days when insufficient monitoring data are collected [f]—PR. [g]
Catalytic incinerator	Temperature upstream and downstream of the catalyst bed [63.114(a)(1)(ii)].	1. Continuous records. 2. Record and report the upstream and downstream temperatures and the temperature difference across the catalyst bed averaged over the full period of the performance test—NCS. 3. Record the daily average upstream temperature and temperature difference across the catalyst bed for each operating day.[e] 4. Report all daily average upstream temperatures that are outside the range established in the NCS or operating permit—PR. 5. Report all daily average temperature differences across the catalyst bed that are outside the range established in the NCS or operating permit—PR. 6. Report all operating days when insufficient monitoring data are collected.[f]
Boiler or process heater with a design heat input capacity less than 44 megawatts and vent stream is *not* introduced with or as the primary fuel.	Firebox temperature [b] [63.114(a)(3)]	1. Continuous records. 2. Record and report the firebox temperature averaged over the full period of the performance test—NCS. 3. Record the daily average firebox temperature for each operating day.[e] 4. Report all daily average firebox temperatures that are outside the range established in the NCS or operating permit and all operating days when insufficient monitoring data are collected [f]—PR.
Flare	Presence of a flame at the pilot light [63.114(a)(2)].	1. Hourly records of whether the monitor was continuously operating and whether the pilot flame was continuously present during each hour. 2. Record and report the presence of a flame at the pilot light over the full period of the compliance determination—NCS. 3. Record the times and durations of all periods when all pilot flames are absent or the monitor is not operating. 4. Report the times and durations of all periods when all pilot flames of a flare are absent—PR.

TABLE 3.—PROCESS VENTS—MONITORING, RECORDKEEPING, AND REPORTING REQUIREMENTS FOR COMPLYING WITH 98 WEIGHT-PERCENT REDUCTION OF TOTAL ORGANIC HAZARDOUS AIR POLLUTANTS EMISSIONS OR A LIMIT OF 20 Parts Per Million by Volume—Continued

Control device	Parameters to be monitored [a]	Recordkeeping and reporting requirements for monitored parameters
Recapture devices	The appropriate monitoring device identified in table 4 when, in the table, the term ''recapture'' is substituted for ''recovery.'' [63.114(a)(5)].	1. The recordkeeping and reporting requirements for monitored parameters identified for the appropriate monitoring device in table 4 of this subpart.
Scrubber for halogenated vent streams (Note: Controlled by a combustion device other than a flare).	pH of scrubber effluent [63.114(a)(4)(i)], and.	1. Continuous records. 2. Record and report the pH of the scrubber effluent averaged over the full period of the performance test—NCS. 3. Record the daily average pH of the scrubber effluent for each operating day.[e] 4. Report all daily average pH values of the scrubber effluent that are outside the range established in the NCS or operating permit and all operating days when insufficient monitoring data are collected [f]—PR.
Scrubber for halogenated vent streams (Note: Controlled by a combustion device other than a flare) (Continued).	Scrubber liquid and gas flow rates [63.114(a)(4)(ii)].	1. Continuous records of scrubber liquid flow rate. 2. Record and report the scrubber liquid/gas ratio averaged over the full period of the performance test—NCS. 3. Record the daily average scrubber liquid/gas ratio for each operating day.[e] 4. Report all daily average scrubber liquid/gas ratios that are outside the range established in the NCS or operating permit and all operating days when insufficient monitoring data are collected [f]—PR.
All control devices	Presence of flow diverted to the atmosphere from the control device [63.114(d)(1)] *or*.	1. Hourly records of whether the flow indicator was operating and whether diversion was detected at any time during each hour. 2. Record and report the times and durations of all periods when the vent stream is diverted through a bypass line or the monitor is not operating—PR.
	Monthly inspections of sealed valves [63.114(d)(2)].	1. Records that monthly inspections were performed. 2. Record and report all monthly inspections that show the valves are moved to the diverting position or the seal has been changed—PR.

[a] Regulatory citations are listed in brackets.
[b] Monitor may be installed in the firebox or in the ductwork immediately downstream of the firebox before any substantial heat exchange is encountered.
[c] ''Continuous records'' is defined in § 63.111 of this subpart.
[d] NCS=Notification of Compliance Status described in § 63.152 of this subpart.
[e] The daily average is the average of all recorded parameter values for the operating day. If all recorded values during an operating day are within the range established in the NCS or operating permit, a statement to this effect can be recorded instead of the daily average.
[f] The periodic reports shall include the duration of periods when monitoring data is not collected for each excursion as defined in § 63.152(c)(2)(ii)(A) of this subpart.
[g] PR=Periodic Reports described in § 63.152 of this subpart.

TABLE 4.—PROCESS VENTS—MONITORING, RECORDKEEPING, AND REPORTING REQUIREMENTS FOR MAINTAINING A TRE INDEX VALUE >1.0 AND ≤4.0

Final recovery device	Parameters to be monitored [a]	Recordkeeping and reporting requirements for monitored parameters
Absorber [b]	Exit temperature of the absorbing liquid [63.114(b)(1)], and.	1. Continuous records.[c] 2. Record and report the exit temperature of the absorbing liquid averaged over the full period of the TRE determination—NCS.[d] 3. Record the daily average exit temperature of the absorbing liquid for each operating day.[e] 4. Report all the daily average exit temperatures of the absorbing liquid that are outside the range established in the NCS or operating permit—PR.[f]
	Exit specific gravity [63.114(b)(1)]	1. Continuous records. 2. Record and report the exit specific gravity averaged over the full period of the TRE determination—NCS. 3. Record the daily average exit specific gravity for each operating day.[e] 4. Report all daily average exit specific gravity values that are outside the range established in the NCS or operating permit—PR.
Condenser [a]	Exit (product side) temperature [63.114(b)(2)].	1. Continuous records. 2. Record and report the exit temperature averaged over the full period of the TRE determination—NCS. 3. Record the daily average exit temperature for each operating day.[e] 4. Report all daily average exit temperatures that are outside the range established in the NCS or operating permit—PR.

TABLE 4.—PROCESS VENTS—MONITORING, RECORDKEEPING, AND REPORTING REQUIREMENTS FOR MAINTAINING A TRE INDEX VALUE >1.0 AND ≤4.0—Continued

Final recovery device	Parameters to be monitored [a]	Recordkeeping and reporting requirements for monitored parameters
Carbon adsorber. [d]	Total regeneration stream mass or volumetric flow during carbon bed regeneration cycle(s) [63.114(b)(3)], and.	1. Record of total regeneration stream mass flow for each carbon bed regeneration cycle. 2. Record and report the total regeneration stream mass flow during each carbon bed regeneration cycle during the period of the TRE determination—NCS. 3. Report all carbon bed regeneration cycles when the total regeneration stream mass flow is outside the range established in the NCS or operating permit—PR.
	Temperature of the carbon bed after regeneration [and within 15 minutes of completing any cooling cycle(s)] [63.114(b)(3)].	1. Records of the temperature of the carbon bed after each regeneration. 2. Record and report the temperature of the carbon bed after each regeneration during the period of the TRE determination—NCS. 3. Report all carbon bed regeneration cycles during which temperature of the carbon bed after regeneration is outside the range established in the NCS or operating permit—PR.
All recovery devices (as an alternative to the above).	Concentration level or reading indicated by an organic monitoring device at the outlet of the recovery device [63.114 (b)].	1. Continuous records. 2. Record and report the concentration level or reading averaged over the full period of the TRE determination—NCS. 3. Record the daily average concentration level or reading for each operating day. [e] 4. Report all daily average concentration levels or readings that are outside the range established in the NCS or operating permit—PR.

[a] Regulatory citations are listed in brackets.
[b] Alternatively, these devices may comply with the organic monitoring device provisions listed at the end of this table under ''All Recovery Devices.''
[c] ''Continuous records'' is defined in § 63.111 of this subpart.
[d] NCS=Notification of Compliance Status described in § 63.152 of this subpart.
[e] The daily average is the average of all values recorded during the operating day. If all recorded values during an operating day are within the range established in the NCS or operating permit, a statement to this effect can be recorded instead of the daily average.
[f] PR=Periodic Reports described in § 63.152 of this subpart.

TABLE 7.—TRANSFER OPERATIONS—MONITORING, RECORDKEEPING, AND REPORTING REQUIREMENTS FOR COMPLYING WITH 98 WEIGHT-PERCENT REDUCTION OF TOTAL ORGANIC HAZARDOUS AIR POLLUTANTS EMISSIONS OR A LIMIT OF 20 PARTS PER MILLION BY VOLUME

Control device	Parameters to be monitored [a]	Recordkeeping and reporting requirements for monitored parameters
Thermal incinerator	Firebox temperature [b] [63.127(a)(1)(i)]	1. Continuous records [c] during loading. 2. Record and report the firebox temperature averaged over the full period of the performance test—NCS.[d] 3. Record the daily average firebox temperature for each operating day.[e] 4. Report daily average temperatures that are outside the range established in the NCS or operating permit and all operating days when insufficient monitoring data are collected [f]—PR.[g]
Catalytic incinerator	Temperature upstream and downstream of the catalyst bed [63.127(a)(1)(ii)].	1. Continuous records during loading. 2. Record and report the upstream and downstream temperatures and the temperature difference across the catalyst bed averaged over the full period of the performance test—NCS. 3. Record the daily average upstream temperature and temperature difference across catalyst bed for each operating day.[e] 4. Report all daily average upstream temperatures that are outside the range established in the NCS or operating permit—PR. 5. Report all daily average temperature differences across the catalyst bed that are outside the range established in the NCS or operating permit—PR. 6. Report all operating days when insufficient monitoring data are collected.[f]
Boiler or process heater with a design heat input capacity less than 44 megawatts and vent stream is *not* introduced with or as the primary fuel.	Firebox temperature [b] [63.127(a)(3)] ..	1. Continuous records during loading. 2. Record and report the firebox temperature averaged over the full period of the performance test—NCS. 3. Record the daily average firebox temperature for each operating day.[e] 4. Report all daily average firebox temperatures that are outside the range established in the NCS or operating permit and all operating days when insufficient data are collected [f]—PR.

TABLE 7.—TRANSFER OPERATIONS—MONITORING, RECORDKEEPING, AND REPORTING REQUIREMENTS FOR COMPLYING WITH 98 WEIGHT-PERCENT REDUCTION OF TOTAL ORGANIC HAZARDOUS AIR POLLUTANTS EMISSIONS OR A LIMIT OF 20 PARTS PER MILLION BY VOLUME—Continued

Control device	Parameters to be monitored [a]	Recordkeeping and reporting requirements for monitored parameters
Flare	Presence of a flame at the pilot light [63.127(a)(2)].	1. Hourly records of whether the monitor was continuously operating and whether the pilot flame was continuously present during each hour. 2. Record and report the presence of a flame at the pilot light over the full period of the compliance determination—NCS. 3. Record the times and durations of all periods when all pilot flames are absent or the monitor is not operating. 4. Report the duration of all periods when all pilot flames of a flare are absent—PR.
Scrubber for halogenated vent streams (Note: Controlled by a combustion device other than a flare).	pH of scrubber effluent [63.127(a)(4)(i)], and.	1. Continuous records during loading 2. Record and report the pH of the scrubber effluent averaged over the full period of the performance test—NCS 3. Record the daily average pH of the scrubber effluent for each operating day.[e] 4. Report all daily average pH values of the scrubber effluent that are outside the range established in the NCS or operating permit and all operating days when insufficient monitoring data are collected [f]—PR.
	Scrubber liquid and gas flow rates [63.127(a)(4)(ii)].	1. Continuous records during loading of scrubber liquid flow rate. 2. Record and report the scrubber liquid/gas ratio averaged over the full period of the performance test—NCS. 3. Record the daily average scrubber liquid/gas ratio for each operating day.[e] 4. Report all daily average scrubber liquid/gas ratios that are outside the range established in the NCS or operating permit and all operating days when insufficient monitoring data are collected [f]—PR.
Absorber [h]	Exit temperature of the absorbing liquid [63.127(b)(1)], and.	1. Continuous records during loading. 2. Record and report the exit temperature of the absorbing liquid averaged over the full period of the performance test—NCS. 3. Record the daily average exit temperature of the absorbing liquid for each operating day.[e] 4. Report all daily average exit temperatures of the absorbing liquid that are outside the range established in the NCS or operating permit and all operating days when insufficient monitoring data are collected [f]—PR.
	Exit specific gravity [63.127(b)(1)]	1. Continuous records during loading. 2. Record and report the exit specific gravity averaged over the full period of the performance test—NCS. 3. Record the daily average exit specific gravity for each operating day.[e] 4. Report all daily average exit specific gravity values that are outside the range established in the NCS or operating permit and all operating days when insufficient monitoring data are collected [f]—PR.
Condenser [h]	Exit (product side) temperature [63.127(b)(2)].	1. Continuous records during loading. 2. Record and report the exit temperature averaged over the full period of the performance test—NCS. 3. Record the daily average exit temperature for each operating day.[e] 4. Report all daily average exit temperatures that are outside the range established in the NCS or operating permit and all operating days when insufficient monitoring data are collected [f]—PR.
Carbon adsorber [h]	Total regeneration stream mass or volumetric flow during carbon bed regeneration cycle(s) [63.127(b)(3)], and.	1. Record of total regeneration stream mass flow for each carbon bed regeneration cycle. 2. Record and report the total regeneration stream mass flow during each carbon bed regeneration cycle during the period of the performance test—NCS. 3. Report all carbon bed regeneration cycles when the total regeneration stream mass flow is outside the range established in the NCS or operating permit and all operating days when insufficient monitoring data are collected [f]—PR.
	Temperature of the carbon bed after regeneration [and within 15 minutes of completing any cooling cycle(s)] [63.127(b)(3)].	1. Records of the temperature of the carbon bed after each regeneration. 2. Record and report the temperature of the carbon bed after each regeneration during the period of the performance test—NCS. 3. Report all the carbon bed regeneration cycles during which the temperature of the carbon bed after regeneration is outside the range established in the NCS or operating permit and all operating days when insufficient monitoring data are collected [f]—PR.

TABLE 7.—TRANSFER OPERATIONS—MONITORING, RECORDKEEPING, AND REPORTING REQUIREMENTS FOR COMPLYING WITH 98 WEIGHT-PERCENT REDUCTION OF TOTAL ORGANIC HAZARDOUS AIR POLLUTANTS EMISSIONS OR A LIMIT OF 20 PARTS PER MILLION BY VOLUME—Continued

Control device	Parameters to be monitored [a]	Recordkeeping and reporting requirements for monitored parameters
All recovery devices (as an alternative to the above).	Concentration level or reading indicated by an organic monitoring device at the outlet of the recovery device [63.127(b)].	1. Continuous records during loading. 2. Record and report the concentration level or reading averaged over the full period of the performance test—NCS. 3. Record the daily average concentration level or reading for each operating day.[d] 4. Report all daily average concentration levels or readings that are outside the range established in the NCS or operating permit and all operating days when insufficient monitoring data are collected [f]—PR.
All control devices and vapor balancing systems.	Presence of flow diverted to the atmosphere from the control device [63.127(d)(1)] *or*.	1. Hourly records of whether the flow indicator was operating and whether a diversion was detected at any time during each hour. 2. Record and report the duration of all periods when the vent stream is diverted through a bypass line or the monitor is not operating—PR.
	Monthly inspections of sealed valves [63.127(d)(2)].	1. Records that monthly inspections were performed. 2. Record and report all monthly inspections that show the valves are moved to the diverting position or the seal has been changed.

[a] Regulatory citations are listed in brackets.
[b] Monitor may be installed in the firebox or in the ductwork immediately downstream of the firebox before any substantial heat exchange is encountered.
[c] ''Continuous records'' is defined in § 63.111 of this subpart.
[d] NCS = Notification of Compliance Status described in § 63.152 of this subpart.
[e] The daily average is the average of all recorded parameter values for the operating day. If all recorded values during an operating day are within the range established in the NCS or operating permit, a statement to this effect can be recorded instead of the daily average.
[f] The periodic reports shall include the duration of periods when monitoring data are not collected for each excursion as defined in § 63.152(c)(2)(ii)(A) of this subpart.
[g] PR = Periodic Reports described in § 63.152 of this subpart.
[h] Alternatively, these devices may comply with the organic monitoring device provisions listed at the end of this table under ''All Recovery Devices.''

TABLE 11.—WASTEWATER—INSPECTION AND MONITORING REQUIREMENTS FOR WASTE MANAGEMENT UNITS

To comply with	Inspection or monitoring requirement	Frequency of inspection or monitoring	Method
Tanks:			
63.133(b)(1)	Inspect fixed roof and all openings for leaks.	Initially Semi-annually	Visual.
63.133(c)	Inspect floating roof in accordance with §§ 63.120 (a)(2) and (a)(3).	See § 63.120 (a)(2) and (a)(3)	Visual.
63.133(d)	Measure floating roof seal gaps in accordance with §§ 63.120 (b)(2)(i) through (b)(4).		See § 63.120 (b)(2)(i) through (b)(4).
	—Primary seal gaps	Once every 5 years Initially Annually.	
	—Secondary seal gaps	.	
63.133(f) 63.133(g)	Inspect wastewater tank for control equipment failures and improper work practices.	Initially Semi-annually	Visual.
Surface impoundments:			
63.134(b)(1)	Inspect cover and all openings for leaks	Initially Semi-annually	Visual.
63.134(c)	Inspect surface impoundment for control equipment failures and improper work practices.	Initially Semi-annually	Visual.
Containers:			
63.135(b)(1), 63.135(b)(2)(ii).	Inspect cover and all openings for leaks	Initially Semi-annually	Visual.
63.135(d)(1)	Inspect enclosure and all openings for leaks.	Initially Semi-annually	Visual.
63.135(e)	Inspect container for control equipment failures and improper work practices.	Initially Semi-annually	Visual.
Individual Drain Systems[a]:			
63.136(b)(1)	Inspect cover and all openings to ensure there are no gaps, cracks, or holes.	Initially Semi-annually	Visual.
63.136(c)	Inspect individual drain system for control equipment failures and improper work practices.	Initially Semi-annually	Visual.
63.136(e)(1)	Verify that sufficient water is present to properly maintain integrity of water seals.	Initially Semi-annually	Visual.

TABLE 11.—WASTEWATER—INSPECTION AND MONITORING REQUIREMENTS FOR WASTE MANAGEMENT UNITS—Continued

To comply with	Inspection or monitoring requirement	Frequency of inspection or monitoring	Method
63.136(e)(2), 63.136(f)(1)	Inspect all drains using tightly-fitted caps or plugs to ensure caps and plugs are in place and properly installed.	Initially Semi-annually	Visual.
63.136(f)(2)	Inspect all junction boxes to ensure covers are in place and have no visible gaps, cracks, or holes.	Initially Semi-annually	Visual or smoke test or other means as specified.
63.136(f)(3)	Inspect unburied portion of all sewer lines for cracks and gaps.	Initially Semi-annually	Visual.
Oil-water separators:			
63.137(b)(1)	Inspect fixed roof and all openings for leaks.	Initially Semi-annually	Visual.
63.137(c)	Measure floating roof seal gaps in accordance with 40 CFR 60.696(d)(1).	Initially[b]	See 40 CFR 60.696(d)(1).
	—Primary seal gaps	Once every 5 years.	
63.137(c)	—Secondary seal gaps	Initially[b] Annually.	
63.137(d)	Inspect oil-water separator for control equipment failures and improper work practices.	Initially Semi-annually	Visual.

[a] As specified in § 63.136(a), the owner or operator shall comply with either the requirements of § 63.136 (b) and (c) or § 63.136 (e) and (f).
[b] Within 60 days of installation as specified in §63.137(c).

TABLE 12.—MONITORING REQUIREMENTS FOR TREATMENT PROCESSES

To comply with	Parameters to be monitored	Frequency	Methods
1. Required mass removal of Table 8 and/or Table 9 compound(s) from wastewater treated in a properly operated biological treatment unit 63.138(f), 63.138(g).	Appropriate parameters as specified in §63.143(c) and approved by permitting authority.	Appropriate frequency as specified in §63.143 and as approved by permitting authority.	Appropriate methods as specified in §63.143 and as approved by permitting authority.
2. Design steam stripper 63.138(d).	Steam flow rate	Continuously	Integrating steam flow monitoring device equipped with a continuous recorder.
	Wastewater feed mass flow rate	Continuously	Liquid flow meter installed at stripper influent and equipped with a continuous recorder.
	Wastewater feed temperature	Continuously	Liquid temperature monitoring device installed at stripper influent and equipped with a continuous recorder.
3. Alternative monitoring parameters.	Other parameters may be monitored upon approval from the Administrator in accordance with the requirements specified in §63.151(f).	.	

TABLE 13.—WASTEWATER—MONITORING REQUIREMENTS FOR CONTROL DEVICES

Control Device	Monitoring equipment required	Parameters to be monitored	Frequency
All control devices	1. Flow indicator installed at all bypass lines to the atmosphere and equipped with continuous recorder[b] *or*.	1. Presence of flow diverted from the control device to the atmosphere *or*.	Hourly records of whether the flow indicator was operating and whether a diversion was detected at any time during each hour
	2. Valves sealed closed with car-seal or lock-and-key configuration.	2. Monthly inspections of sealed valves.	Monthly.
Thermal Incinerator	Temperature monitoring device installed in firebox or in ductwork immediately downstream of firebox[a] and equipped with a continuous recorder[b].	Firebox temperature	Continuous.
Catalytic Incinerator	Temperature monitoring device installed in gas stream immediately before and after catalyst bed and equipped with a continuous recorder[b].	1. Temperature upstream of catalyst bed *or*. 2. Temperature difference across catalyst bed.	Continuous.

TABLE 13.—WASTEWATER—MONITORING REQUIREMENTS FOR CONTROL DEVICES—Continued

Control Device	Monitoring equipment required	Parameters to be monitored	Frequency
Flare	Heat sensing device installed at the pilot light and equipped with a continuous recorder[a].	Presence of a flame at the pilot light.	Hourly records of whether the monitor was continuously operating and whether the pilot flame was continuously present during each hour.
Boiler or process heater <44 megawatts and vent stream is not mixed with the primary fuel.	Temperature monitoring device installed in firebox[a] and equipped with continuous recorder[b].	Combustion temperature	Continuous.
Condenser	Temperature monitoring device installed at condenser exit and equipped with continuous recorder[b].	Condenser exit (product side) temperature.	Continuous.
Carbon adsorber (regenerative)	Integrating regeneration stream flow monitoring device having an accuracy of ± 10 percent, *and*.	Total regeneration stream mass or volumetric flow during carbon bed regeneration cycle(s).	For each regeneration cycle, record the total regeneration stream mass or volumetric flow.
	Carbon bed temperature monitoring device.	Temperature of carbon bed after regeneration [and within 15 minutes of completing any cooling cycle(s)].	For each regeneration cycle and within 15 minutes of completing any cooling cycle, record the carbon bed temperature.
Carbon adsorber (Non-regenerative).	Organic compound concentration monitoring device.[c].	Organic compound concentration of adsorber exhaust.	Daily or at intervals no greater than 20 percent of the design carbon replacement interval, whichever is greater.
Alternative monitoring parameters.	Other parameters may be monitored upon approval from the Administrator in accordance with the requirements in §63.143(e)(3).		

[a] Monitor may be installed in the firebox or in the ductwork immediately downstream of the firebox before any substantial heat exchange is encountered.
[b] "Continuous recorder" is defined in §63.111 of this subpart.
[c] As an alternative to conducting this monitoring, an owner or operator may replace the carbon in the carbon adsorption system with fresh carbon at a regular predetermined time interval that is less than the carbon replacement interval that is determined by the maximum design flow rate and organic concentration in the gas stream vented to the carbon adsorption system.

Table 14a [Reserved]

Table 14b [Reserved]

TABLE 15.—WASTEWATER—INFORMATION ON TABLE 8 AND/OR TABLE 9 COMPOUNDS TO BE SUBMITTED WITH NOTIFICATION OF COMPLIANCE STATUS FOR PROCESS UNITS AT NEW AND/OR EXISTING SOURCES [a,b]

Process unit identification code [c]	Stream identification code	Concentration of table 8 and/or table 9 compound(s) (ppmw) [d,e]	Flow rate (lpm) [e,f]	Group 1 or Group 2 [g]	Compliance approach [h]	Treatment process(es) identification [i]	Waste management unit(s) identification	Intended control device

[a] The information specified in this table must be submitted; however, it may be submitted in any format. This table presents an example format.
[b] Other requirements for the NCS are specified in §63.152(b) of this subpart.
[c] Also include a description of the process unit (e.g., benzene process unit).
[d] Except when §63.132(e) is used, annual average concentration as specified in §63.132 (c) or (d) and §63.144.
[e] When §63.132(e) is used, indicate the wastewater stream is a designated Group 1 wastewater stream.
[f] Except when §63.132(e) is used, annual average flow rate as specified in §63.132 (c) or (d) and in §63.144.
[g] Indicate whether stream is Group 1 or Group 2. If Group 1, indicate whether it is Group 1 for Table 8 or Table 9 compounds or for both Table 8 and Table 9 compounds.
[h] Cite §63.138 compliance option used.

Table 16 [Reserved]

TABLE 17.—INFORMATION FOR TREATMENT PROCESSES TO BE SUBMITTED WITH NOTIFICATION OF COMPLIANCE STATUS [a,b]

Treatment process identification [c]	Description [d]	Wastewater stream(s) treated [e]	Monitoring parameters [f]

* * * * * * *

[c] Identification codes should correspond to those listed in Table 15.

* * * * * * *

[e] Stream identification code for each wastewater stream treated by each treatment unit. Identification codes should correspond to entries listed in Table 15.

[f] Parameter(s) to be monitored or measured in accordance with Table 12 and §63.143 of this Subpart.

TABLE 18.—INFORMATION FOR WASTE MANAGEMENT UNITS TO BE SUBMITTED WITH NOTIFICATION OF COMPLIANCE STATUS [a,b]

Waste management unit identification [c]	Description [d]	Wastewater stream(s) received or managed [e]

* * * * * * *

[c] Identification codes should correspond to those listed in Table 15.

* * * * * * *

[e] Stream identification code for each wastewater stream received or managed by each waste management unit. Identification codes should correspond to entries listed in Table 15.

TABLE 20.—WASTEWATER—PERIODIC REPORTING REQUIREMENTS FOR CONTROL DEVICES USED TO COMPLY WITH §§ 63.133–63.138

Control device	Reporting requirements
Thermal incinerator	1. Report all daily average [a] temperatures that are outside the range established in the NCS [a] or operating permit and all operating days when insufficient monitoring data are collected. [c]
Catalytic incinerator	1. Report all daily average [a] upstream temperatures that are outside the range established in the NCS [b] or operating permit. 2. Report all daily average [a] temperature differences across the catalyst bed that are outside the range established in the NCS [b] or operating permit. 3. Report all operating days when insufficient monitoring data are collected. [c]
Boiler or process heater with a design heat input capacity less than 44 megawatts and vent stream is not mixed with the primary fuel.	1. Report all daily average [a] firebox temperatures that are outside the range established in the NCS [b] or operating permit and all operating days when insufficient monitoring data are collected. [c]
Flare	1. Report the duration of all periods when all pilot flames are absent.
Condenser	1. Report all daily average [a] exit temperatures that are outside the range established in the NCS [b] or operating permit and all operating days when insufficient monitoring data are collected. [c]
Carbon adsorber	1. Report all carbon bed regeneration cycles when the total regeneration stream mass or volumetric flow is outside the range established in the NCS [b] or operating permit. 2. Report all carbon bed regeneration cycles during which the temperature of the carbon bed after regeneration is outside the range established in the NCS [b] or operating permit. 3. Report all operating days when insufficient monitoring data are collected. [c]
All control devices	1. Report the times and durations of all periods when the vent stream is diverted through a bypass line or the monitor is not operating, or 2. Report all monthly inspections that show the valves are moved to the diverting position or the seal has been changed.

[a] The daily average is the average of all values recorded during the operating day, as specified in § 63.147(d) of this subpart.

[b] NCS = Notification of Compliance Status described in § 63.152 of this subpart.

[c] The periodic reports shall include the duration of periods when monitoring data are not collected for each excursion as defined in § 63.152(c)(2)(ii)(A) of this subpart.

TABLE 35.—CONTROL REQUIREMENTS FOR ITEMS OF EQUIPMENT THAT MEET THE CRITERIA OF § 63.149 OF SUBPART G

Item of equipment	Control requirement [a]
Drain or drain hub	(a) Tightly fitting solid cover (TFSC); or (b) TFSC with a vent to either a process, or to a fuel gas system, or to a control device meeting the requirements of § 63.139(c); or (c) Water seal with submerged discharge or barrier to protect discharge from wind.

TABLE 35.—CONTROL REQUIREMENTS FOR ITEMS OF EQUIPMENT THAT MEET THE CRITERIA OF § 63.149 OF SUBPART G—Continued

Item of equipment	Control requirement [a]
Manhole [b]	(a) TFSC; or (b) TSFC with a vent to either a process, or to a fuel gas system, or to a control device meeting the requirements of § 63.139(c); or (c) If the item is vented to the atmosphere, use a TFSC with a properly operating water seal at the entrance or exit to the item to restrict ventilation in the collection system. The vent pipe shall be at least 90 cm in length and not exceeding 10.2 cm in nominal inside diameter.
Lift station	(a) TFSC; or (b) TFSC with a vent to either a process, or to a fuel gas system, or to a control device meeting the requirements of § 63.139(c); or (c) If the lift station is vented to the atmosphere, use a TFSC with a properly operating water seal at the entrance or exit to the item to restrict ventilation in the collection system. The vent pipe shall be at least 90 cm in length and not exceeding 10.2 cm in nominal inside diameter. The lift station shall be level controlled to minimize changes in the liquid level.
Trench	(a) TFSC; or (b) TFSC with a vent to either a process, or to a fuel gas system, or to a control device meeting the requirements of § 63.139(c); or (c) If the item is vented to the atmosphere, use a TFSC with a properly operating water seal at the entrance or exit to the item to restrict ventilation in the collection system. The vent pipe shall be at least 90 cm in length and not exceeding 10.2 cm in nominal inside diameter.
Pipe	Each pipe shall have no visible gaps in joints, seals, or other emission interfaces.
Oil/Water separator	(a) Equip with a fixed roof and route vapors to a process or to a fuel gas system, or equip with a closed vent system that routes vapors to a control device meeting the requirements of § 63.139(c); or (b) Equip with a floating roof that meets the equipment specifications of § 60.693 (a)(1)(i), (a)(1)(ii), (a)(2), (a)(3), and (a)(4).
Tank [c]	Maintain a fixed roof.[d] If the tank is sparged [e] or used for heating or treating by means of an exothermic reaction, a fixed roof and a system shall be maintained that routes the organic hazardous air pollutants vapors to other process equipment or a fuel gas system, or a closed vent system that routes vapors to a control device that meets the requirements of 40 CFR § 63.119 (e)(1) or (e)(2).

[a] Where a tightly fitting solid cover is required, it shall be maintained with no visible gaps or openings, except during periods of sampling, inspection, or maintenance.
[b] Manhole includes sumps and other points of access to a conveyance system.
[c] Applies to tanks with capacities of 38 m^3 or greater.
[d] A fixed roof may have openings necessary for proper venting of the tank, such as pressure/vacuum vent, j-pipe vent.
[e] The liquid in the tank is agitated by injecting compressed air or gas.

TABLE 36.—COMPOUND LISTS USED FOR COMPLIANCE DEMONSTRATIONS FOR ENHANCED BIOLOGICAL TREATMENT PROCESSES (SEE § 63.145(b))

List 1	List 2	List 3
Acetonitrile	Acetaldehyde	Allyl Chloride.
Acetophenone	Acrolein	Bromomethane.
Acrylonitrile	Benzene	Butadiene 1,3.
Biphenyl	Benzyl Chloride	Carbon Disulfide.
Chlorobenzene	Bromoform	Carbon Tetrachloride.
Dichloroethyl Ether	Cumene (isopropylbenzene)	Chloroethane (ethyl chloride).
Diethyl Sulfate	Dichlorobenzene 1,4	Chloroform.
Dimethyl Sulfate	Dichloroethane 1,2	Chloroprene.
Dimethyl Hydrazine 1,1	Dichloroethane 1,1 (ethylidenedichloride)	Dibromoethane 1,2.
Dinitrophenol 2,4	Dichloropropane 1,2	Dichloroethene 1,1 (vinylidene chloride).
Dinitrotoluene 2,4	Dimethylaniline N,N	Dichloropropene 1,3.
Dioxane 1,4	Epichlorohydrin	Hexane-n.
Ethylene Glycol Monobutyl Ether Acetate	Ethyl Acrylate	Methyl Chloride.
Ethylene Glycol Monomethyl Ether Acetate	Ethylbenzene	Methylene Chloride (dichloromethane).
Ethylene Glycol Dimethyl Ether	Ethylene Dibromide	Phosgene.
Hexachlorobenzene	Ethylene Oxide	Propylene Oxide.
Isophorone	Hexachlorobutadiene	Trichloroethane 1,12.
Methanol	Hexachloroethane	Trichloroethylene.
Methyl Methacrylate	Methyl Ethyl Ketone, (2 butanone)	Trimethylpentane 2,2,4.
Nitrobenzene	Methyl Isobutyl Ketone	Vinyl Chloride.
Toluidine	Methyl Tertiary Butyl Ether	
Trichlorobenzene 1,2,4	Naphathalene	
Trichlorophenol 2,4,6	Nitropropane 2	
Triethylamine	Propionaldehyde	
	Styrene.	
	Tetrachloroethane 1,1,2,2.	
	Toluene.	
	Trichloroethane 1,1,1 (methyl chloroform).	
	Vinyl Acetate	
	Xylene-m	
	Xylene-o	

TABLE 36.—COMPOUND LISTS USED FOR COMPLIANCE DEMONSTRATIONS FOR ENHANCED BIOLOGICAL TREATMENT PROCESSES (SEE § 63.145(b))—Continued

List 1	List 2	List 3
	Xylene-p	

TABLE 37.—DEFAULT BIORATES FOR LIST 1 COMPOUNDS

Compound name	Biorate, K1 L/g MLVSS-hr
ACETONITRILE	0.100
ACETOPHENONE	0.538
ACRYLONITRILE	0.750
BIPHENYL	5.643
CHLOROBENZENE	10.000
DICHLOROETHYL ETHER	0.246
DIETHYL SULFATE	0.105
DIMETHYL HYDRAZINE(1,1)	0.227
DIMETHYL SULFATE	0.178
DINITROPHENOL 2,4	0.620
DINITROTOLUENE(2,4)	0.784
DIOXANE(1,4)	0.393
ETHYLENE GLYCOL DIMETHYL ETHER	0.364
ETHYLENE GLYCOL MONOMETHYL ETHER ACETATE	0.159
ETHYLENE GLYCOL MONOBUTYL ETHER ACETATE	0.496
HEXACHLOROBENZENE	16.179
ISOPHORONE	0.598
METHANOL	0.200
METHYL METHACRYLATE	4.300
NITROBENZENE	2.300
TOLUIDINE (-0)	0.859
TRICHLOROBENZENE 1,2,4	4.393
TRICHLOROPHENOL 2,4,5	4.477
TRIETHYLAMINE	1.064

Figure 1.—Definitions of Terms Used in Wastewater Equations

Main Terms

AMR=Actual mass removal of Table 8 and/or Table 9 compounds achieved by treatment process or a series of treatment processes, kg/hr.

C=Concentration of Table 8 and/or Table 9 compounds in wastewater, ppmw.

CG=Concentration of TOC (minus methane and ethane) or total organic hazardous air pollutants, in vented gas stream, dry basis, ppmv.

CG_c=Concentration of TOC or organic hazardous air pollutants corrected to 3-percent oxygen, in vented gas stream, dry basis, ppmv.

CGS=Concentration of sample compounds in vented gas stream, dry basis, ppmv.

E=Removal or destruction efficiency, percent.

F_{bio}=Site-specific fraction of Table 8 and/or Table 9 compounds biodegraded, unitless.

f^{bio}=Site-specific fraction of an individual Table 8 or Table 9 compound biodegraded, unitless.

Fm=Compound-specific fraction measured factor, unitless (listed in table 34).

Fr=Fraction removal value for Table 8 and/or Table 9 compounds, unitless (listed in Table 9).

Fr_{avg}=Flow-weighted average of the Fr values.

i=Identifier for a compound.

j=Identifier for a sample.

k=Identifier for a run.

K_2=Constant, $41.57 * 10^{-9}$, $(ppm)^{-1}$ (gram-mole per standard m^3) (kg/g), where standard temperature (gram-mole per standard m^3) is 20 °C.

m=Number of samples.

M=Mass, kg.

MW=Molecular weight, kg/kg-mole.

n=Number of compounds.

p=Number of runs.

$\%O_{2d}$=Concentration of oxygen, dry basis, percent by volume.

Q=Volumetric flowrate of wastewater, m^3/hr.

QG=Volumetric flow rate of vented gas stream, dry standard, m^3/min.

QMG=Mass flowrate of TOC (minus methane and ethane) or organic hazardous air pollutants, in vented gas stream, kg/hr.

QMW=Mass flowrate of Table 8 and/or Table 9 compounds in wastewater, kg/hr.

ρ=Density, kg/m^3.

RMR=Required mass removal achieved by treatment process or a series of treatment processes, kg/hr.

t_T=Total time of all runs, hr.

Subscripts

a=Entering.

b=Exiting.

i=Identifier for a compound.

j=Identifier for a sample.

k=Identifier for a run.

m=Number of samples.

n=Number of compounds.

p=Number of runs.

T=Total; sum of individual.

Subpart H—National Emission Standards for Organic Hazardous Air Pollutants for Equipment Leaks

31. Section 63.161 is amended by revising the definitions of ''control device'', ''first attempt at repair'', and ''repaired''; and by adding the definitions for ''combustion device,'' ''fuel gas,'' fuel gas system,'' ''on-site or on site,'' ''recapture device,'' and ''recovery device'', and ''routed to a process or route to a process'' to read as follows:

§ 63.161 Definitions.

* * * * *

Combustion device means an individual unit of equipment, such as a flare, incinerator, process heater, or boiler, used for the combustion of organic hazardous air pollutant emissions.

* * * * *

Control device means any equipment used for recovering, recapturing, or oxidizing organic hazardous air pollutant vapors. Such equipment includes, but is not limited to, absorbers, carbon adsorbers, condensers, flares, boilers, and process heaters.

* * * * *

First attempt at repair means to take action for the purpose of stopping or reducing leakage of organic material to the atmosphere, followed by monitoring as specified in §63.180(b) and (c), as appropriate, to verify whether the leak is repaired, unless the owner or operator determines by other means that the leak is not repaired.

* * * * *

Fuel gas means gases that are combusted to derive useful work or heat.

Fuel gas system means the offsite and onsite piping and control system that gathers gaseous stream(s) generated by onsite operations, may blend them with other sources of gas, and transports the gaseous stream for use as fuel gas in combustion devices or in in-process combustion equipment such as furnaces and gas turbines, either singly or in combination.

* * * * *

On-site or *On site* means, with respect to records required to be maintained by this subpart, that the records are stored at a location within a major source which encompasses the affected source. On-site includes, but is not limited to, storage at the chemical manufacturing process unit to which the records pertain, or storage in central files elsewhere at the major source.

* * * * *

Recapture device means an individual unit of equipment capable of and used for the purpose of recovering chemicals, but not normally for use, reuse, or sale. Recapture devices include, but are not limited to, absorbers, carbon absorbers, and condensers.

Recovery device means an individual unit of equipment capable of and normally used for the purpose of recovering chemicals for fuel value (i.e., net positive heating value), use, reuse, or for sale for fuel value, use or reuse. Recovery devices include, but are not limited to, absorbers, carbon absorbers, and condensers. For purposes of the monitoring, recordkeeping, and reporting requirements of this subpart, recapture devices are considered recovery devices.

Repaired means that equipment:

(1) is adjusted, or otherwise altered, to eliminate a leak as defined in the applicable sections of this subpart, and

(2) unless otherwise specified in applicable provisions of this subpart, is monitored as specified in § 63.180 (b) and (c), as appropriate, to verify that emissions from the equipment are below the applicable leak definition.

Routed to a process or route to a process means the emissions are conveyed by hard-piping or a closed vent system to any enclosed portion of a process unit where the emissions are predominately recycled and/or consumed in the same manner as a material that fulfills the same function in the process; and/or transformed by chemical reaction into materials that are not organic hazardous air pollutants; and/or incorporated into a product; and/or recovered.

* * * * *

32. Section 63.162 is amended by revising paragraphs (f)(2) and (f)(3); adding paragraphs (g) and (h) to read as follows:

§ 63.162 Standards: General.

* * * * *

(f) * * *

(2) The identification on a valve may be removed after it has been monitored as specified in §§ 63.168(f)(3), and 63.175(e)(7)(i)(D) of this subpart, and no leak has been detected during the follow-up monitoring. If the owner or operator elects to comply using the provisions of § 63.174(c)(1)(i) of this subpart, the identification on a connector may be removed after it is monitored as specified in § 63.174(c)(1)(i) and no leak is detected during that monitoring.

(3) The identification which has been placed on equipment determined to have a leak, except for a valve or for a connector that is subject to the provisions of § 63.174(c)(1)(i), may be removed after it is repaired.

(g) Except as provided in paragraph (g)(1) of this section, all terms in this subpart that define a period of time for completion of required tasks (e.g., weekly, monthly, quarterly, annual), refer to the standard calendar periods unless specified otherwise in the section or subsection that imposes the requirement.

(1) If the initial compliance date does not coincide with the beginning of the standard calendar period, an owner or operator may elect to utilize a period beginning on the compliance date, or may elect to comply in accordance with the provisions of paragraphs (g)(2) or (g)(3) of this section.

(2) Time periods specified in this subpart for completion of required tasks may be changed by mutual agreement between the owner or operator and the Administrator, as specified in subpart A of this part. For each time period that is changed by agreement, the revised period shall remain in effect until it is changed. A new request is not necessary for each recurring period.

(3) Except as provided in paragraph (g)(1) or (g)(2) of this section, where the period specified for compliance is a standard calendar period, if the initial compliance date does not coincide with the beginning of the calendar period, compliance shall be required according to the schedule specified in paragraphs (g)(3)(i) or (g)(3)(ii) of this section, as appropriate.

(i) Compliance shall be required before the end of the standard calendar period within which the compliance deadline occurs, if there remain at least 3 days for tasks that must be performed weekly, at least 2 weeks for tasks that must be performed monthly, at least 1 month for tasks that must be performed each quarter, or at least 3 months for tasks that must be performed annually; or

(ii) In all other cases, compliance shall be required before the end of the first full standard calendar period after the period within which the initial compliance deadline occurs.

(4) In all instances where a provision of this subpart requires completion of a task during each of multiple successive periods, an owner or operator may perform the required task at any time during each period, provided the task is conducted at a reasonable interval after completion of the task during the previous period.

(h) In all cases where the provisions of this subpart require an owner or operator to repair leaks by a specified time after the leak is detected, it is a violation of this subpart to fail to take action to repair the leaks within the specified time. If action is taken to repair the leaks within the specified time, failure of that action to successfully repair the leak is not a violation of this subpart. However, if the repairs are unsuccessful, a leak is detected and the owner or operator shall take further action as required by applicable provisions of this subpart.

33. Section 63.163 is amended by revising paragraphs (e)(1)(ii) and (g) to read as follows:

§ 63.163 Standards: Pumps in light liquid service.

* * * * *

(e) * * *

(1) * * *

(ii) Equipped with a barrier fluid degassing reservoir that is routed to a process or fuel gas system or connected by a closed-vent system to a control device that complies with the requirements of § 63.172 of this subpart; or

* * * * *

(g) Any pump equipped with a closed-vent system capable of capturing and transporting any leakage from the seal or seals to a process or to a fuel gas system or to a control device that complies with the requirements of § 63.172 of this subpart is exempt from the requirements of paragraphs (b) through (e) of this section.

* * * * *

34. Section 63.164 is amended by revising paragraphs (b)(2) and (h) to read as follows:

§ 63.164 Compressors.

* * * * *

(b) * * *

(2) Equipped with a barrier fluid system degassing reservoir that is routed to a process or fuel gas system or connected by a closed-vent system to a control device that complies with the requirements of § 63.172 of this subpart; or

* * * * *

(h) A compressor is exempt from the requirements of paragraphs (a) through (f) of this section if it is equipped with a closed-vent system to capture and transport leakage from the compressor drive shaft seal back to a process or a fuel gas system or to a control device that complies with the requirements of § 63.172 of this subpart.

* * * * *

35. Section 63.165 is amended by revising paragraph (c) to read as follows:

§ 63.165 Standards: Pressure relief devices in gas/vapor service.

* * * * *

(c) Any pressure relief device that is routed to a process or fuel gas system or equipped with a closed-vent system capable of capturing and transporting leakage from the pressure relief device to a control device as described in § 63.172 of this subpart is exempt from the requirements of paragraphs (a) and (b) of this section.

* * * * *

36. Section 63.168 is amended by revising the meaning of $\%V_L$ in paragraph (e)(1) and revising paragraph (f)(3) to read as follows:

§ 63.168 Standards: Valves in gas/vapor service and in light liquid service.

* * * * *

(e)(1) * * *

$\%V_L$=Percent leaking valves as determined through periodic monitoring required in paragraphs (b) through (d) of this section.

* * * * *

(f) * * *

(3) When a leak has been repaired, the valve shall be monitored at least once within the first 3 months after its repair.

(i) The monitoring shall be conducted as specified in § 63.180 (b) and (c), as appropriate, to determine whether the valve has resumed leaking.

(ii) Periodic monitoring required by paragraphs (b) through (d) of this section may be used to satisfy the requirements of this paragraph (f)(3), if the timing of the monitoring period coincides with the time specified in this paragraph (f)(3). Alternatively, other monitoring may be performed to satisfy the requirements of this paragraph (f)(3), regardless of whether the timing of the monitoring period for periodic monitoring coincides with the time specified in this paragraph (f)(3).

(iii) If a leak is detected by monitoring that is conducted pursuant to paragraph (f)(3) of this section, the owner or operator shall follow the provisions of paragraphs (f)(3)(iii)(A) and (f)(3)(iii)(B) of this section, to determine whether that valve must be counted as a leaking valve for purposes of § 63.168(e) of this subpart.

(A) If the owner or operator elected to use periodic monitoring required by paragraphs (b) through (d) of this section to satisfy the requirements of paragraph (f)(3) of this section, then the valve shall be counted as a leaking valve.

(B) If the owner or operator elected to use other monitoring, prior to the periodic monitoring required by paragraphs (b) through (d) of this section, to satisfy the requirements of paragraph (f)(3) of this section, then the valve shall be counted as a leaking valve unless it is repaired and shown by periodic monitoring not to be leaking.

* * * * *

37. Section 63.169 is amended by revising paragraph (c)(3) to read as follows:

§ 63.169 Standards: Pumps, valves, connectors, and agitators in heavy liquid service; instrumentation systems; and pressure relief devices in liquid service.

* * * * *

(c) * * *

(3) For equipment identified in paragraph (a) of this section that is not monitored by the method specified in § 63.180(b), repaired shall mean that the visual, audible, olfactory, or other indications of a leak to the atmosphere have been eliminated; that no bubbles are observed at potential leak sites during a leak check using soap solution; or that the system will hold a test pressure.

* * * * *

38. Section 63.172 is amended by revising paragraphs (b), (c), (h)(2), and (j)(2), and adding paragraph (n) to read as follows:

§ 63.172 Standards: Closed-vent systems and control devices.

* * * * *

(b) Recovery or recapture devices (e.g., condensers and absorbers) shall be designed and operated to recover the organic hazardous air pollutant emissions or volatile organic compounds emissions vented to them with an efficiency of 95 percent or greater, or to an exit concentration of 20 parts par million by volume, whichever is less stringent. The 20 parts per million by volume performance standard is not applicable to the provisions of § 63.179.

(c) Enclosed combustion devices shall be designed and operated to reduce the organic hazardous air pollutant emissions or volatile organic compounds emissions vented to them with an efficiency of 95 percent or greater, or to an exit concentration of 20 parts per million by volume, on a dry basis, corrected to 3 percent oxygen, whichever is less stringent, or to provide a minimum residence time of 0.50 seconds at a minimum temperature of 760 °C.

* * * * *

(h) * * *

(2) Repair shall be completed no later than 15 calendar days after the leak is detected, except as provided in paragraph (i) of this section.

* * * * *

(j) * * *

(2) Secure the bypass line valve in the non-diverting position with a car-seal or a lock-and-key type configuration. A visual inspection of the seal or closure mechanism shall be performed at least once every month to ensure the valve is maintained in the non-diverting position and the vent stream is not diverted through the bypass line.

* * * * *

(n) After the compliance dates specified in § 63.100 of subpart F of this part, the owner or operator of any control device subject to this subpart that is also subject to monitoring, recordkeeping, and reporting requirements in 40 CFR part 264, subpart BB, or is subject to monitoring and recordkeeping requirements in 40 CFR part 265, subpart BB, may elect to

comply either with the monitoring, recordkeeping, and reporting requirements of this subpart, or with the monitoring, recordkeeping, and reporting requirements in 40 CFR parts 264 and/or 265, as described in this paragraph, which shall constitute compliance with the monitoring, recordkeeping and reporting requirements of this subpart. The owner or operator shall identify which option has been chosen, in the next periodic report required by § 63.182(d).

39. Section 63.173 is amended by revising paragraphs (d)(1)(ii), (f), and (g) to read as follows:

§ 63.173 Standards: Agitators in gas/vapor service and in light liquid service.

* * * * *

(d) * * *

(1) * * *

(ii) Equipped with a barrier fluid degassing reservoir that is routed to a process or fuel gas system or connected by a closed-vent system to a control device that complies with the requirements of § 63.172 of this subpart; or

* * * * *

(f) Any agitator equipped with a closed-vent system capable of capturing and transporting any leakage from the seal or seals to a process or fuel gas system or to a control device that complies with the requirements of § 63.172 of this subpart is exempt from the requirements of paragraphs (a) through (c) of the section.

(g) Any agitator that is located within the boundary of an unmanned plant site is exempt from the weekly visual inspection requirement of paragraphs (b)(1) and (d)(4) of this section, and the daily requirements of paragraph (d)(5) of this section, provided that each agitator is visually inspected as often as practical and at least monthly.

* * * * *

40. Section 63.174 is amended by revising paragraphs (c)(1)(i), (c)(1)(ii), the introductory text of paragraph (c)(2), revising paragraph (c)(2)(ii); adding paragraphs (c)(2)(iii) and (c)(2)(iv); removing and reserving paragraph (e); revising paragraph (h)(2); and revising paragraphs (i)(1) and (i)(2) to read as follows:

§ 63.174 Standards: Connectors in gas/vapor service and in light liquid service.

* * * * *

(c)(1)(i) Except as provided in paragraph (c)(1)(ii) of this section, each connector that has been opened or has otherwise had the seal broken shall be monitored for leaks when it is reconnected or within the first 3 months after being returned to organic hazardous air pollutants service. If the monitoring detects a leak, it shall be repaired according to the provisions of paragraph (d) of this section, unless it is determined to be nonrepairable, in which case it is counted as a nonrepairable connector for the purposes of paragraph (i)(2) of this section.

(ii) As an alternative to the requirements in paragraph (c)(1)(i) of this section, an owner or operator may choose not to monitor connectors that have been opened or otherwise had the seal broken. In this case, the owner or operator may not count nonrepairable connectors for the purposes of paragraph (i)(2) of this section. The owner or operator shall calculate the percent leaking connectors for the monitoring periods described in paragraph (b) of this section, by setting the nonrepairable component, $C_{AN,}$ in the equation in paragraph (i)(2) of this section to zero for all monitoring periods.

* * * * *

(2) As an alternative to the requirements of paragraph (b)(3) of this section, each screwed connector 2 inches or less in nominal inside diameter installed in a process unit before the dates specified in paragraph (c)(2)(iii) or (c)(2)(iv) of this section may:

* * * * *

(ii) Be monitored for leaks within the first 3 months after being returned to organic hazardous air pollutants service after having been opened or otherwise had the seal broken. If that monitoring detects a leak, it shall be repaired according to the provisions of paragraph (d) of this section.

(iii) For sources subject to subparts F and I of this part, the provisions of paragraph (c)(2) of this section apply to screwed connectors installed before December 31, 1992.

(iv) For sources not identified in paragraph (c)(2)(iii) of this section, the provisions of paragraph (c)(2) of this section apply to screwed connectors installed before the date of proposal of the applicable subpart of this part that references this subpart.

* * * * *

(e) [Reserved]

* * * * *

(h) * * *

(2) If any inaccessible or ceramic or ceramic-lined connector is observed by visual, audible, olfactory, or other means to be leaking, the leak shall be repaired as soon as practicable, but no later than 15 calendar days after the leak is detected, except as provided in § 63.171 of this subpart and paragraph (g) of this section.

* * * * *

(i) * * *

(1) For the first monitoring period, use the following equation:

$$\% C_L = C_L/(C_t + C_C) \times 100$$

where:

$\% C_L$ = Percent leaking connectors as determined through periodic monitoring required in paragraphs (a) and (b) of this section.

C_L = Number of connectors measured at 500 parts per million or greater, by the method specified in § 63.180(b) of this subpart.

C_t = Total number of monitored connectors in the process unit.

C_C = Optional credit for removed connectors = 0.67 × net (i.e., total removed—total added) number of connectors in organic hazardous air pollutants service removed from the process unit after the compliance date set forth in the applicable subpart for existing process units, and after the date of initial start-up for new process units. If credits are not taken, then $C_C = 0$.

(2) For subsequent monitoring periods, use the following equation:

$$\% C_L = [(C_L - C_{AN})/(C_t + C_C)] \times 100$$

where:

$\% C_L$ = Percent leaking connectors as determined through periodic monitoring required in paragraphs (a) and (b) of this section.

C_L = Number of connectors, including nonrepairables, measured at 500 parts per million or greater, by the method specified in § 63.180(b) of this subpart.

C_{AN} = Number of allowable nonrepairable connectors, as determined by monitoring required in paragraphs (b)(3) and (c) of this section, not to exceed 2 percent of the total connector population, C_t.

C_t = Total number of monitored connectors, including nonrepairables, in the process unit.

C_C = Optional credit for removed connectors = 0.67 × net number (i.e., total removed—total added) of connectors in organic hazardous air pollutants service removed from the process unit after the compliance date set forth in the applicable subpart for existing process units, and after the date of initial start-up for new process units. If credits are not taken, then $C_C = 0$.

* * * * *

41. Section 63.180 is amended by revising paragraphs (b)(4)(ii), the introductory text of paragraph (c), and paragraph (c)(2) to read as follows:

§ 63.180 Test methods and procedures.

* * * * *

(b) * * *

(4) * * *

(ii) Mixtures of methane in air at the concentrations specified in paragraphs (b)(4)(ii)(A) through (b)(4)(ii)(C) of this section. A calibration gas other than methane in air may be used if the instrument does not respond to methane or if the instrument does not meet the performance criteria specified in paragraph (b)(2)(i) of this section. In such cases, the calibration gas may be a mixture of one or more of the compounds to be measured in air.

(A) For Phase I, a mixture of methane or other compounds, as applicable, in air at a concentration of approximately, but less than, 10,000 parts per million.

(B) For Phase II, a mixture of methane or other compounds, as applicable, and air at a concentration of approximately, but less than, 10,000 parts per million for agitators, 5,000 parts per million for pumps, and 500 parts per million for all other equipment, except as provided in paragraph (b)(4)(iii) of this section.

(C) For Phase III, a mixture of methane or other compounds, as applicable, and air at a concentration of approximately, but less than, 10,000 parts per million methane for agitators; 2,000 parts per million for pumps in food/medical service; 5,000 parts per million for pumps in polymerizing monomer service; 1,000 parts per million for all other pumps; and 500 parts per million for all other equipment, except as provided in paragraph (b)(4)(iii) of this section.

* * * * *

(c) When equipment is monitored for compliance as required in §§ 63.164(i), 63.165(a), and 63.172(f) or when equipment subject to a leak definition of 500 ppm is monitored for leaks as required by this subpart, the owner or operator may elect to adjust or not to adjust the instrument readings for background. If an owner or operator elects to not adjust instrument readings for background, the owner or operator shall monitor the equipment according to the procedures specified in paragraphs (b)(1) through (b)(4) of this section. In such case, all instrument readings shall be compared directly to the applicable leak definition to determine whether there is a leak. If an owner or operator elects to adjust instrument readings for background, the owner or operator shall monitor the equipment according to the procedures specified in paragraphs (c)(1) through (c)(4) of this section.

* * * * *

(2) The background level shall be determined, using the same procedures that will be used to determine whether the equipment is leaking.

* * * * *

42. Section 63.181 is amended by revising paragraphs (d)(7)(i) and (d)(7)(ii), revising the introductory text of paragraphs (g)(2) and (g)(3), and revising paragraph (i) to read as follows:

§ 63.181 Recordkeeping requirements.

* * * * *

(d) * * *

(7)(i) Identification, either by list, location (area or grouping), or tagging of connectors that have been opened or otherwise had the seal broken since the last monitoring period required in § 63.174(b) of this subpart, as described in § 63.174(c)(1) of this subpart, unless the owner or operator elects to comply with the provisions of § 63.174(c)(1)(ii) of this subpart.

(ii) The date and results of monitoring as required in § 63.174(c) of this subpart. If identification of connectors that have been opened or otherwise had the seal broken is made by location under paragraph (d)(7)(i) of this section, then all connectors within the designated location shall be monitored.

* * * * *

(g) * * *

(2) Records of operation of closed-vent systems and control devices, as specified in paragraphs (g)(2)(i) through (g)(2)(iii) of this section.

* * * * *

(3) Records of inspections of closed-vent systems subject to the provisions of § 63.172, as specified in paragraphs (g)(2)(i) through (g)(2)(iii) of this section.

* * * * *

(i) The owner or operator of equipment in heavy liquid service shall comply with the requirements of either paragraph (i)(1) or (i)(2) of this section, as provided in paragraph (i)(3) of this section.

(1) Retain information, data, and analyses used to determine that a piece of equipment is in heavy liquid service.

(2) When requested by the Administrator, demonstrate that the piece of equipment or process is in heavy liquid service.

(3) A determination or demonstration that a piece of equipment or process is in heavy liquid service shall include an analysis or demonstration that the process fluids do not meet the definition of ''in light liquid service.'' Examples of information that could document this include, but are not limited to, records of chemicals purchased for the process, analyses of process stream composition, engineering calculations, or process knowledge.

* * * * *

43. Section 63.182 is amended by adding paragraph (d)(2)(xvii) to read as follows:

§ 63.182 Reporting requirements.

* * * * *

(d) * * *

(2) * * *

(xvii) If applicable, the compliance option that has been selected under § 63.172(n).

* * * * *

Subpart I—National Emission Standards for Organic Hazardous Air Pollutants for Certain Processes Subject to the Negotiated Regulation for Equipment Leaks

44. Section 63.190 is amended by adding a sentence to the end of paragraph (d) and revising the last sentence in paragraphs (e)(5)(i) and (e)(5)(ii) to read as follows:

§ 63.190 Applicability and designation of source.

* * * * *

(d) * * * If specific items of equipment, comprising part of a process unit subject to this subpart, are managed by different administrative organizations (e.g., different companies, affiliates, departments, divisions, etc.) those items of equipment may be aggregated with any process unit within the source for all purposes under subpart H of this part, providing there is no delay in the applicable compliance date in paragraph (e) of this section.

(e) * * *

(5)(i) * * * The owner or operator who elects to use this provision shall also comply with the requirements of § 63.192(m) of this subpart.

(ii) * * * The owner or operator who elects to use this provision shall also comply with the requirements of § 63.192(m) of this subpart.

* * * * *

45. Section 63.191 is amending by adding the definition for ''on-site or on site'' to read as follows:

§ 63.191 Definitions.

* * * * *

On-site or *On site* means, with respect to records required to be maintained by this subpart, that the records are stored at a location within a major source which encompasses the affected source. On-site includes, but is not limited to, storage at the process unit to which the records pertain, or storage in central files elsewhere at the major source.

* * * * *

46. Section 63.192 is amended by adding two sentences to the end of the introductory text of paragraph (f); revising paragraph (f)(1); adding a sentence to the end of paragraph (f)(2)(iii) and paragraph (g)(1); removing paragraphs (g)(1(i) and (g)(1)(ii); and revising paragraph (k) to read as follows:

§ 63.192 Standard.

* * * * *

(f) * * * If an owner or operator submits copies of reports to the applicable EPA Regional Office, the owner or operator is not required to maintain copies of reports. If the EPA Regional Office has waived the requirement of § 63.10(a)(4)(ii) for submittal of copies of reports, the owner or operator is not required to maintain copies of reports.

(1) All applicable records shall be maintained in such a manner that they can be readily accessed. The most recent 6 months of records shall be retained on site or shall be accessible from a central location by computer or other means that provides access within 2 hours after a request.

(2) * * *

(iii) * * * These records may take the form of a ''checklist,'' or other form of recordkeeping that confirms conformance with the startup, shutdown, and malfunction plan for the event.

(g) * * *

(1) * * * Submittals shall be sent on or before the specified date.

* * * * *

(k) The owner or operator of a process unit which meets the criteria of § 63.190 (c), shall comply with the requirements of either paragraph (k)(1) or (k)(2) of this section.

(1) Retain information, data, and analysis used to determine that the process unit does not have the designated organic hazardous air pollutant present in the process. Examples of information that could document this include, but are not limited to, records of chemicals purchased for the process, analyses of process stream composition, engineering calculations, or process knowledge.

(2) When requested by the Administrator, demonstrate that the chemical manufacturing process unit does not have the designated organic hazardous air pollutant present in the process.

* * * * *

47. Section 63.193 is revised to read as follows:

§ 63.193 Delegation of authority.

In delegating implementation and enforcement authority to a State under section 112(l) of the Clean Air Act, the authority for § 63.177 of subpart H of this part shall be retained by the Administrator and not transferred to a State.

48. Appendix A of part 63 is amended by revising Methods 304A and 304B to read as follows:

Appendix A to Part 63—Test Methods

Method 304A: Determination of Biodegradation Rates of Organic Compounds (Vent Option)

1. Applicability and Principle

1.1 *Applicability.* This method is applicable for the determination of biodegradation rates of organic compounds in an activated sludge process. The test method is designed to evaluate the ability of an aerobic biological reaction system to degrade or destroy specific components in waste streams. The method may also be used to determine the effects of changes in wastewater composition on operation. The biodegradation rates determined by utilizing this method are not representative of a full-scale system. The rates measured by this method shall be used in conjunction with the procedures listed in appendix C of this part to calculate the fraction emitted to the air versus the fraction biodegraded.

1.2 *Principle.* A self-contained benchtop bioreactor system is assembled in the laboratory. A sample of mixed liquor is added and the waste stream is then fed continuously. The benchtop bioreactor is operated under conditions nearly identical to the target full-scale activated sludge process. Bioreactor temperature, dissolved oxygen concentration, average residence time in the reactor, waste composition, biomass concentration, and biomass composition of the full-scale process are the parameters which are duplicated in the benchtop bioreactor. Biomass shall be removed from the target full-scale activated sludge unit and held for no more than 4 hours prior to use in the benchtop bioreactor. If antifoaming agents are used in the full-scale system, they shall also be used in the benchtop bioreactor. The feed flowing into and the effluent exiting the benchtop bioreactor are analyzed to determine the biodegradation rates of the target compounds. The flow rate of the exit vent is used to calculate the concentration of target compounds (utilizing Henry's law) in the exit gas stream. If Henry's law constants for the compounds of interest are not known, this method cannot be used in the determination of the biodegradation rate and Method 304B is the suggested method. The choice of analytical methodology for measuring the compounds of interest at the inlet and outlet to the benchtop bioreactor are left to the discretion of the source, except where validated methods are available.

2. Apparatus

Figure 1 illustrates a typical laboratory apparatus used to measure biodegradation rates. While the following description refers to Figure 1, the EPA recognizes that alternative reactor configurations, such as alternative reactor shapes and locations of probes and the feed inlet, will also meet the intent of this method. Ensure that the benchtop bioreactor system is self-contained and isolated from the atmosphere (except for the exit vent stream) by leak-checking fittings, tubing, etc.

2.1 *Laboratory apparatus.*

2.1.1 *Benchtop Bioreactor.* The biological reaction is conducted in a biological oxidation reactor of at least 6 liters capacity. The benchtop bioreactor is sealed and equipped with internal probes for controlling and monitoring dissolved oxygen and internal temperature. The top of the reactor is equipped for aerators, gas flow ports, and instrumentation (while ensuring that no leaks to the atmosphere exist around the fittings).

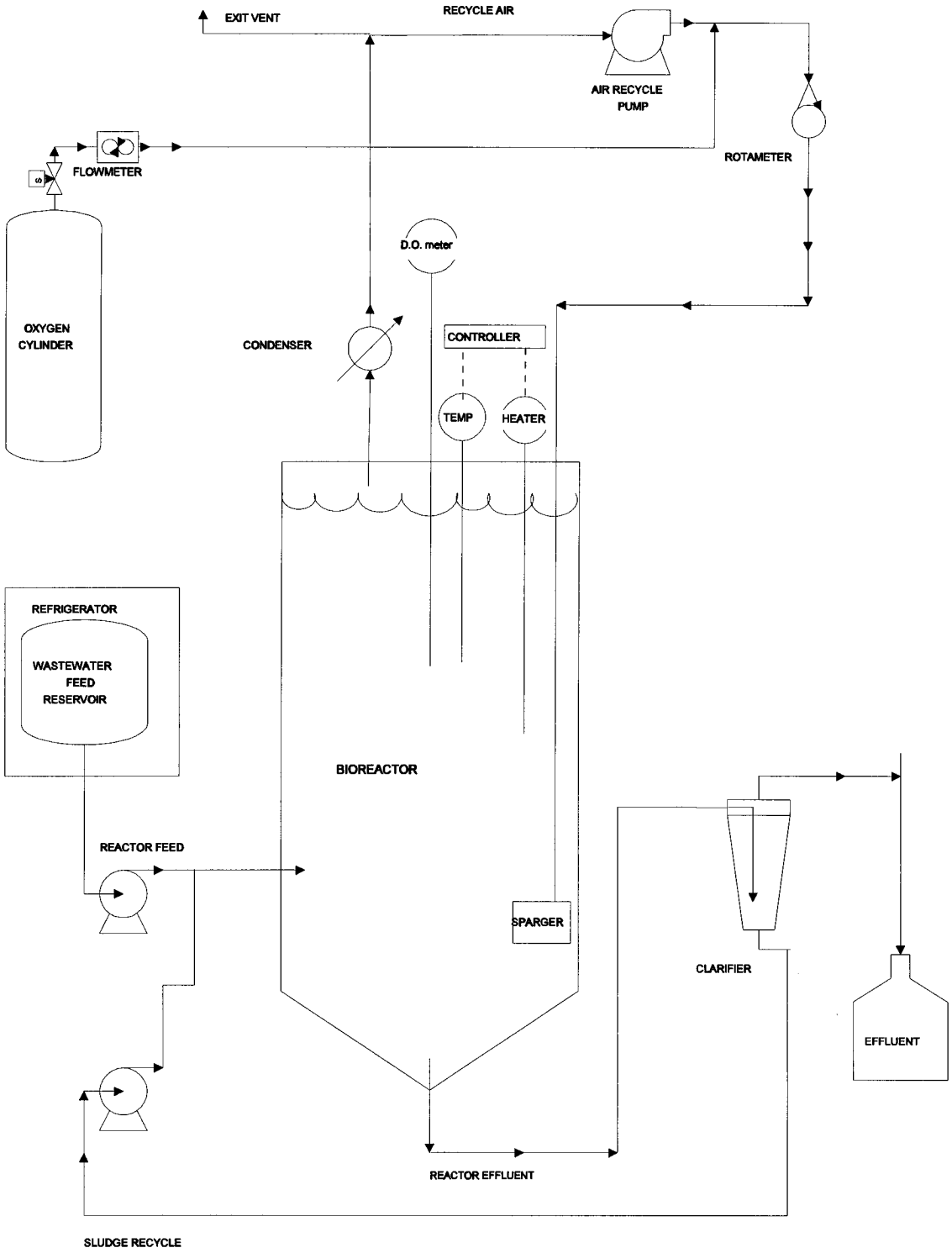

EPA METHOD 304A VENT BIOREACTOR SYSTEM

2.1.2 *Aeration gas.* Aeration gas is added to the benchtop bioreactor through three diffusers, which are glass tubes that extend to the bottom fifth of the reactor depth. A pure oxygen pressurized cylinder is recommended in order to maintain the specified oxygen concentration. Install a blower (e.g., Diaphragm Type, 15 SCFH capacity) to blow the aeration gas into the reactor diffusers. Measure the aeration gas flow rate with a rotameter (e.g., 0–15 SCFH recommended). The aeration gas will rise through the benchtop bioreactor, dissolving oxygen into the mixture in the process. The aeration gas must provide sufficient agitation to keep the solids in suspension. Provide an exit for the aeration gas from the top flange of the benchtop bioreactor through a water-cooled (e.g., Allihn-type) vertical condenser. Install the condenser through a gas-tight fitting in the benchtop bioreactor closure. Install a splitter which directs a portion of the gas to an exit vent and the rest of the gas through an air recycle pump back to the benchtop bioreactor. Monitor and record the flow rate through the exit vent at least 3 times per day throughout the day.

2.1.3 *Wastewater Feed.* Supply the wastewater feed to the benchtop bioreactor in a collapsible low-density polyethylene container or collapsible liner in a container (e.g., 20 L) equipped with a spigot cap (collapsible containers or liners of other material may be required due to the permeability of some volatile compounds through polyethylene). Obtain the wastewater feed by sampling the wastewater feed in the target process. A representative sample of wastewater shall be obtained from the piping leading to the aeration tank. This sample may be obtained from existing sampling valves at the discharge of the wastewater feed pump, or collected from a pipe discharging to the aeration tank, or by pumping from a well-mixed equalization tank upstream from the aeration tank. Alternatively, wastewater can be pumped continuously to the laboratory apparatus from a bleed stream taken from the equalization tank of the full-scale treatment system.

2.1.3.1 *Refrigeration System.* Keep the wastewater feed cool by ice or by refrigeration to 4 °C. If using a bleed stream from the equalization tank, refrigeration is not required if the residence time in the bleed stream is less than five minutes.

2.1.3.2 *Wastewater Feed Pump.* The wastewater is pumped from the refrigerated container using a variable-speed peristaltic pump drive equipped with a peristaltic pump head. Add the feed solution to the benchtop bioreactor through a fitting on the top flange. Determine the rate of feed addition to provide a retention time in the benchtop bioreactor that is numerically equivalent to the retention time in the full-scale system. The wastewater shall be fed at a rate sufficient to achieve 90 to 100 percent of the full-scale system residence time.

2.1.3.3 *Treated wastewater feed.* The benchtop bioreactor effluent exits at the bottom of the reactor through a tube and proceeds to the clarifier.

2.1.4 *Clarifier.* The effluent flows to a separate closed clarifier that allows separation of biomass and effluent (e.g., 2-liter pear-shaped glass separatory funnel, modified by removing the stopcock and adding a 25-mm OD glass tube at the bottom). Benchtop bioreactor effluent enters the clarifier through a tube inserted to a depth of 0.08 m (3 in.) through a stopper at the top of the clarifier. System effluent flows from a tube inserted through the stopper at the top of the clarifier to a drain (or sample bottle when sampling). The underflow from the clarifier leaves from the glass tube at the bottom of the clarifier. Flexible tubing connects this fitting to the sludge recycle pump. This pump is coupled to a variable speed pump drive. The discharge from this pump is returned through a tube inserted in a port on the side of the benchtop bioreactor. An additional port is provided near the bottom of the benchtop bioreactor for sampling the reactor contents. The mixed liquor from the benchtop bioreactor flows into the center of the clarifier. The clarified system effluent separates from the biomass and flows through an exit near the top of the clarifier. There shall be no headspace in the clarifier.

2.1.5 *Temperature Control Apparatus.* Capable of maintaining the system at a temperature equal to the temperature of the full-scale system. The average temperature should be maintained within ±2 °C of the set point.

2.1.5.1 *Temperature Monitoring Device.* A resistance type temperature probe or a thermocouple connected to a temperature readout with a resolution of 0.1 °C or better.

2.1.5.2 *Benchtop Bioreactor Heater.* The heater is connected to the temperature control device.

2.1.6 *Oxygen Control System.* Maintain the dissolved oxygen concentration at the levels present in the full-scale system. Target full-scale activated sludge systems with dissolved oxygen concentration below2 mg/L are required to maintain the dissolved oxygen concentration in the benchtop bioreactor within 0.5 mg/L of the target dissolved oxygen level. Target full-scale activated sludge systems with dissolved oxygen concentration above 2 mg/L are required to maintain the dissolved oxygen concentration in the benchtop bioreactor within 1.5 mg/L of the target dissolved oxygen concentration; however, for target full-scale activated sludge systems with dissolved oxygen concentrations above 2 mg/L, the dissolved oxygen concentration in the benchtop bioreactor may not drop below 1.5 mg/L. If the benchtop bioreactor is outside the control range, the dissolved oxygen is noted and the reactor operation is adjusted.

2.1.6.1 *Dissolved Oxygen Monitor.* Dissolved oxygen is monitored with a polarographic probe (gas permeable membrane) connected to a dissolved oxygen meter (e.g., 0 to 15 mg/L, 0 to 50 °C).

2.1.6.2 *Benchtop bioreactor Pressure Monitor.* The benchtop bioreactor pressure is monitored through a port in the top flange of the reactor. This is connected to a gauge control with a span of 13-cm water vacuum to 13-cm water pressure or better. A relay is activated when the vacuum exceeds an adjustable setpoint which opens a solenoid valve (normally closed), admitting oxygen to the system. The vacuum setpoint controlling oxygen addition to the system shall be set at approximately 2.5 ± 0.5 cm water and maintained at this setting except during brief periods when the dissolved oxygen concentration is adjusted.

2.1.7 *Connecting Tubing.* All connecting tubing shall be Teflon or equivalent in impermeability. The only exception to this specification is the tubing directly inside the pump head of the wastewater feed pump, which may be Viton, Silicone or another type of flexible tubing. Note: Mention of trade names or products does not constitute endorsement by the U.S. Environmental Protection Agency.

2.2 *Analysis.* If the identity of the compounds of interest in the wastewater is not known, a representative sample of the wastewater shall be analyzed in order to identify all of the compounds of interest present. A gas chromatography/mass spectrometry screening method is recommended.

2.2.1 After identifying the compounds of interest in the wastewater, develop and/or use one or more analytical techniques capable of measuring each of those compounds (more than one analytical technique may be required, depending on the characteristics of the wastewater). Test Method 18, found in appendix A of 40 CFR part 60, may be used as a guideline in developing the analytical technique. Purge and trap techniques may be used for analysis providing the target components are sufficiently volatile to make this technique appropriate. The limit of quantitation for each compound shall be determined.[1] If the effluent concentration of any target compound is below the limit of quantitation determined for that compound, the operation of the Method 304 unit may be altered to attempt to increase the effluent concentration above the limit of quantitation. Modifications to the method shall be approved prior to the test. The request should be addressed to Method 304 contact, Emissions Measurement Center, Mail Drop 19, U.S. Environmental Protection Agency, Research Triangle Park, NC 27711.

2.2.2 *Calibration Standards.* Prepare calibration standards from pure certified standards in an aqueous medium. Prepare and analyze three concentrations of calibration standards for each target component (or for a mixture of components) in triplicate daily throughout the analyses of the test samples. At each concentration level, a single calibration shall be within 5 percent of the average of the three calibration results. The low and medium calibration standards shall bracket the expected concentration of the effluent (treated) wastewater. The medium and high standards shall bracket the expected influent concentration.

3. *Reagents*

3.1 *Wastewater.* Obtain a representative sample of wastewater at the inlet to the full-scale treatment plant if there is an existing full-scale treatment plant (see section 2.1.3).

If there is no existing full-scale treatment plant, obtain the wastewater sample as close to the point of determination as possible. Collect the sample by pumping the wastewater into the 20–L collapsible container. The loss of volatiles shall be minimized from the wastewater by collapsing the container before filling, by minimizing the time of filling, and by avoiding a headspace in the container after filling. If the wastewater requires the addition of nutrients to support the biomass growth and maintain biomass characteristics, those nutrients are added and mixed with the container contents after the container is filled.

3.2 *Biomass.* Obtain the biomass or activated sludge used for rate constant determination in the bench-scale process from the existing full-scale process or from a representative biomass culture (e.g., biomass that has been developed for a future full-scale process). This biomass is preferentially obtained from a thickened acclimated mixed liquor sample. Collect the sample either by bailing from the mixed liquor in the aeration tank with a weighted container, or by collecting aeration tank effluent at the effluent overflow weir. Transport the sample to the laboratory within no more than 4 hours of collection. Maintain the biomass concentration in the benchtop bioreactor at the level of the full-scale system +10 percent throughout the sampling period of the test method.

4. *Procedure.* Safety Note: If explosive gases are produced as a byproduct of biodegradation and could realistically pose a hazard, closely monitor headspace concentration of these gases to ensure laboratory safety. Placement of the benchtop bioreactor system inside a laboratory hood is recommended regardless of byproducts produced.

4.1 *Benchtop Bioreactor Operation.* Charge the mixed liquor to the benchtop bioreactor, minimizing headspace over the liquid surface to minimize entrainment of mixed liquor in the circulating gas. Fasten the benchtop bioreactor headplate to the reactor over the liquid surface. Maintain the temperature of the contents of the benchtop bioreactor system at the temperature of the target full-scale system, +2 °C, throughout the testing period. Monitor and record the temperature of the benchtop bioreactor contents at least to the nearest 0.1 °C.

4.1.1 *Wastewater Storage.* Collect the wastewater sample in the 20–L collapsible container. Store the container at 4 °C throughout the testing period. Connect the container to the benchtop bioreactor feed pump.

4.1.2 *Wastewater Flow Rate.* The hydraulic residence time of the aeration tank is calculated as the ratio of the volume of the tank (L) to the flow rate (L/min). At the beginning of a test, the container shall be connected to the feed pump and solution shall be pumped to the benchtop bioreactor at the required flow rate to achieve the calculated hydraulic residence time of wastewater in the aeration tank.

$$Q_{test} = Q_{fs} \frac{L}{V_{fs}} \qquad \text{Eqn 304A} - 1$$

Where:

Q_{test}=wastewater flow rate (L/min)

Qf_{fs}=average flow rate of full-scale process (L/min)

V_{fs}=volume of full-scale aeration tank (L)

The target flow rate in the test apparatus is the same as the flow rate in the target full-scale process multiplied by the ratio of benchtop bioreactor volume (e.g., 6 L) to the volume of the full-scale aeration tank. The hydraulic residence time shall be maintained at 90 to 100 percent of the residence time maintained in the full-scale unit. A nominal flow rate is set on the pump based on a pump calibration. Changes in the elasticity of the tubing in the pump head and the accumulation of material in the tubing affect this calibration. The nominal pumping rate shall be changed as necessary based on volumetric flow measurements. Discharge the benchtop bioreactor effluent to a wastewater storage, treatment, or disposal facility, except during sampling or flow measurement periods.

4.1.3 *Sludge Recycle Rate.* Set the sludge recycle rate at a rate sufficient to prevent accumulation in the bottom of the clarifier. Set the air circulation rate sufficient to maintain the biomass in suspension.

4.1.4 *Benchtop Bioreactor Operation and Maintenance.* Temperature, dissolved oxygen concentration, exit vent flow rate, benchtop bioreactor effluent flow rate, and air circulation rate shall be measured and recorded three times throughout each day of benchtop bioreactor operation. If other parameters (such as pH) are measured and maintained in the target full-scale unit, these parameters, where appropriate, shall be monitored and maintained to target full-scale specifications in the benchtop bioreactor. At the beginning of each sampling period (section 4.2), sample the benchtop bioreactor contents for suspended solids analysis. Take this sample by loosening a clamp on a length of tubing attached to the lower side port. Determine the suspended solids gravimetrically by the Gooch crucible/glass fiber filter method for total suspended solids, in accordance with Standard Methods [3] or equivalent. When necessary, sludge shall be wasted from the lower side port of the benchtop bioreactor, and the volume that is wasted shall be replaced with an equal volume of the reactor effluent. Add thickened activated sludge mixed liquor as necessary to the benchtop bioreactor to increase the suspended solids concentration to the desired level. Pump this mixed liquor to the benchtop bioreactor through the upper side port (Item 24 in Figure 1). Change the membrane on the dissolved oxygen probe before starting the test. Calibrate the oxygen probe immediately before the start of the test and each time the membrane is changed.

4.1.5 *Inspection and Correction Procedures.* If the feed line tubing becomes clogged, replace with new tubing. If the feed flow rate is not within 5 percent of target flow any time the flow rate is measured, reset pump or check the flow measuring device and measure flow rate again until target flow rate is achieved.

4.2 *Test Sampling.* At least two and one half hydraulic residence times after the system has reached the targeted specifications shall be permitted to elapse before the first sample is taken. Effluent samples of the clarifier discharge (Item 20 in Figure 1) and the influent wastewater feed are collected in 40-mL septum vials to which two drops of 1:10 hydrochloric acid (HCl) in water have been added. Sample the clarifier discharge directly from the drain line. These samples will be composed of the entire flow from the system for a period of several minutes. Feed samples shall be taken from the feed pump suction line after temporarily stopping the benchtop bioreactor feed, removing a connector, and squeezing the collapsible feed container. Store both influent and effluent samples at 4 °C immediately after collection and analyze within 8 hours of collection.

4.2.1 *Frequency of Sampling.* During the test, sample and analyze the wastewater feed and the clarifier effluent at least six times. The sampling intervals shall be separated by at least 8 hours. During any individual sampling interval, sample the wastewater feed simultaneously with or immediately after the effluent sample. Calculate the relative standard deviation (RSD) of the amount removed (i.e., effluent concentration—wastewater feed concentration). The RSD values shall be < 15 percent. If an RSD value is > 15 percent, continue sampling and analyzing influent and effluent sets of samples until the RSD values are within specifications.

4.2.2 *Sampling After Exposure of System to Atmosphere.* If, after starting sampling procedures, the benchtop bioreactor system is exposed to the atmosphere (due to leaks, maintenance, etc.), allow at least one hydraulic residence time to elapse before resuming sampling.

5. Operational Checks and Calibration

5.1 *Dissolved Oxygen.* Fluctuation in dissolved oxygen concentration may occur for numerous reasons, including undetected gas leaks, increases and decreases in mixed liquor suspended solids resulting from cell growth and solids loss in the effluent stream, changes in diffuser performance, cycling of effluent flow rate, and overcorrection due to faulty or sluggish dissolved oxygen probe response. Control the dissolved oxygen concentration in the benchtop bioreactor by changing the proportion of oxygen in the circulating aeration gas. Should the dissolved oxygen concentration drift below the designated experimental condition, bleed a small amount of aeration gas from the system on the pressure side (i. e., immediately upstream of one of the diffusers). This will create a vacuum in the system, triggering the pressure sensitive relay to open the solenoid valve and admit oxygen to the system. Should the dissolved oxygen concentration drift above the designated experimental condition, slow or stop the oxygen input to the system until the dissolved oxygen concentration approaches the correct level.

5.2 *Sludge Wasting.* Determine the suspended solids concentration (section 4.1.4) at the beginning of a test, and once per day thereafter during the test. If the test is completed within a two day period, determine the suspended solids concentration after the final sample set is taken. If the suspended solids concentration

exceeds the specified concentration, remove a fraction of the sludge from the benchtop bioreactor. The required volume of mixed liquor to remove is determined as follows:

$$V_W = V_r\left(\frac{S_m - S_s}{S_m}\right) \qquad \text{Eqn 304A} - 2$$

Where:
V_w is the wasted volume (Liters),
V_r is the volume of the benchtop bioreactor (Liters),
S_m is the measured solids (g/L), and
S_s is the specified solids (g/L).

Remove the mixed liquor from the benchtop bioreactor by loosening a clamp on the mixed liquor sampling tube and allowing the required volume to drain to a graduated flask. Clamp the tube when the correct volume has been wasted. Replace the volume of the liquid wasted by pouring the same volume of effluent back into the benchtop bioreactor. Dispose of the waste sludge properly.

5.3 *Sludge Makeup.* In the event that the suspended solids concentration is lower than the specifications, add makeup sludge back into the benchtop bioreactor. Determine the amount of sludge added by the following equation:

$$V_w = V_r\left(\frac{S_s - S_m}{S_w}\right) \qquad \text{Eqn 304A} - 3$$

Where:
V_w is the volume of sludge to add (Liters),
V_r is the volume of the benchtop bioreactor (Liters),
S_w is the solids in the makeup sludge (g/L),
S_m is the measured solids (g/L), and
S_s is the specified solids (g/L).

5.4 *Wastewater Pump Calibration.* Determine the wastewater flow rate by collecting the system effluent for a time period of at least one hour, and measuring the volume with a graduated cylinder. Record the collection time period and volume collected. Determine flow rate. Adjust the pump speed to deliver the specified flow rate.

6. Calculations

6.1 *Nomenclature.* The following symbols are used in the calculations.

C_i=Average inlet feed concentration for a compound of interest, as analyzed (mg/L)
C_o=Average outlet (effluent) concentration for a compound of interest, as analyzed (mg/L)
X=Biomass concentration, mixed liquor suspended solids (g/L)
t=Hydraulic residence time in the benchtop bioreactor (hours)
V=Volume of the benchtop bioreactor (L)
Q=Flow rate of wastewater into the benchtop bioreactor, average (L/hour)

6.2 *Residence Time.* The hydraulic residence time of the benchtop bioreactor is equal to the ratio of the volume of the benchtop bioreactor (L) to the flow rate (L/h)

$$t = \frac{V}{Q} \qquad \text{Eqn 304A} - 4$$

6.3 *Rate of Biodegradation.* Calculate the rate of biodegradation for each component with the following equation:

$$\text{Rate}\left(\frac{mg}{L-h}\right) = \frac{C_i - C_o}{t} \qquad \text{Eqn 304A} - 5$$

6.4 *First-Order Biorate Constant.* Calculate the first-order biorate constant (K1) for each component with the following equation:

$$K1\left(\frac{L}{g-h}\right) = \frac{C_i - C_o}{t\,C_o X} \qquad \text{Eqn 304A} - 6$$

6.5 *Relative Standard Deviation (RSD).* Determine the standard deviation of both the influent and effluent sample concentrations (S) using the following equation:

$$RSD = \frac{100}{\bar{S}}\left(\sum_{i=1}^{n}\frac{\left(S_i - \bar{S}\right)^2}{(n-1)}\right)^{1/2} \qquad \text{Eqn 304A} - 7$$

6.6 *Determination of Percent Air Emissions and Percent Biodegraded.* Use the results from this test method and follow the applicable procedures in appendix C of 40 CFR part 63, entitled, ''Determination of the Fraction Biodegraded (F_{bio}) in a Biological Treatment Unit'' to determine F_{bio}.

7. Bibliography

1. ''Guidelines for data acquisition and data quality evaluation in Environmental Chemistry'', Daniel MacDoughal, Analytical Chemistry, Volume 52, p. 2242, 1980.
2. Test Method 18, 40 CFR part 60, appendix A.
3. Standard Methods for the Examination of Water and Wastewater, 16th Edition, Method 209C, Total Suspended Solids Dried at 103–105 °C, APHA, 1985.
4. Water7, Hazardous Waste Treatment, Storage, and Disposal Facilities (TSDF)—Air Emission Models, U.S. Environmental Protection Agency, EPA–450/3–87–026, Review Draft, November 1989.
5. Chemdat7, Hazardous Waste Treatment, Storage, and Disposal Facilities (TSDF)—Air Emission Models, U.S. Environmental Protection Agency, EPA–450/3–87–026, Review Draft, November 1989.

Method 304B: Determination of Biodegradation Rates of Organic Compounds (Scrubber Option)

1. Applicability and Principle

1.1 *Applicability.* This method is applicable for the determination of biodegradation rates of organic compounds in an activated sludge process. The test method is designed to evaluate the ability of an aerobic biological reaction system to degrade or destroy specific components in waste streams. The method may also be used to determine the effects of changes in wastewater composition on operation. The biodegradation rates determined by utilizing this method are not representative of a full-scale system. Full-scale systems embody biodegradation and air emissions in competing reactions. This method measures biodegradation in absence of air emissions. The rates measured by this method shall be used in conjunction with the procedures listed in appendix C of this part to calculate the fraction emitted to the air versus the fraction biodegraded.

1.2 *Principle.* A self-contained benchtop bioreactor system is assembled in the laboratory. A sample of mixed liquor is added and the waste stream is then fed continuously. The benchtop bioreactor is operated under conditions nearly identical to the target full-scale activated sludge process, except that air emissions are not a factor. The benchtop bioreactor temperature, dissolved oxygen concentration, average residence time in the reactor, waste composition, biomass concentration, and biomass composition of the target full-scale process are the parameters which are duplicated in the laboratory system. Biomass shall be removed from the target full-scale activated sludge unit and held for no more than 4 hours prior to use in the benchtop bioreactor. If antifoaming agents are used in the full-scale system, they shall also be used in the benchtop bioreactor. The feed flowing into and the effluent exiting the benchtop bioreactor are analyzed to determine the biodegradation rates of the target compounds. The choice of analytical methodology for measuring the compounds of interest at the inlet and outlet to the benchtop bioreactor

are left to the discretion of the source, except where validated methods are available.

2. Apparatus

Figure 1 illustrates a typical laboratory apparatus used to measure biodegradation rates. While the following description refers to Figure 1, the EPA recognizes that alternative reactor configurations, such as alternative reactor shapes and locations of probes and the feed inlet, will also meet the intent of this method. Ensure that the benchtop bioreactor system is self-contained and isolated from the atmosphere by leak-checking fittings, tubing, etc.

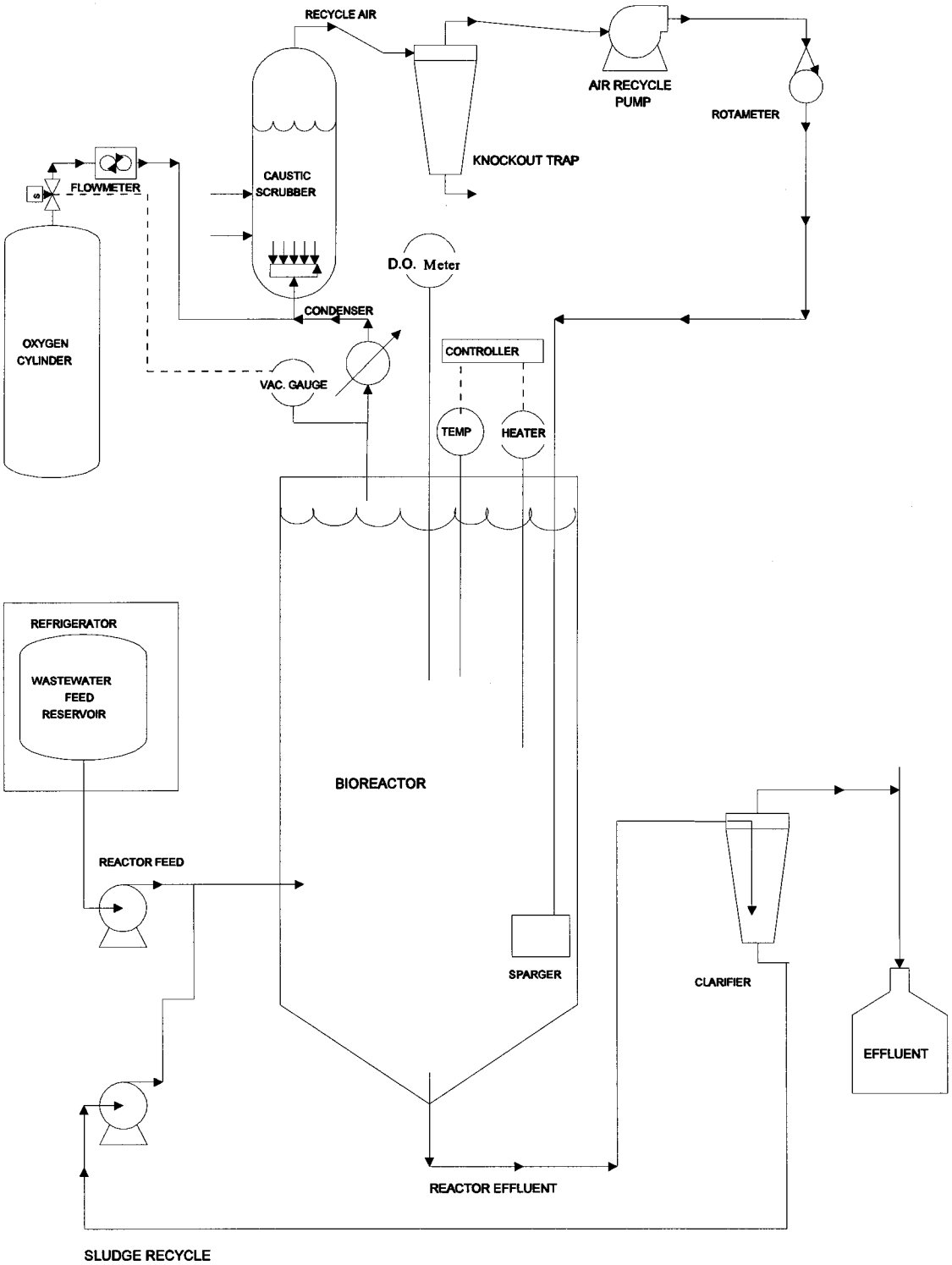

EPA METHOD 304B BIOREACTOR SYSTEM

2.1 *Laboratory apparatus.*

2.1.1 *Benchtop Bioreactor.* The biological reaction is conducted in a biological oxidation reactor of at least 6-liters capacity. The benchtop bioreactor is sealed and equipped with internal probes for controlling and monitoring dissolved oxygen and internal temperature. The top of the benchtop bioreactor is equipped for aerators, gas flow ports, and instrumentation (while ensuring that no leaks to the atmosphere exist around the fittings).

2.1.2 *Aeration gas.* Aeration gas is added to the benchtop bioreactor through three diffusers, which are glass tubes that extend to the bottom fifth of the reactor depth. A pure oxygen pressurized cylinder is recommended in order to maintain the specified oxygen concentration. Install a blower (e.g., Diaphragm Type, 15 SCFH capacity) to blow the aeration gas into the benchtop bioreactor diffusers. Measure the aeration gas flow rate with a rotameter (e.g., 0–15 SCFH recommended). The aeration gas will rise through the benchtop bioreactor, dissolving oxygen into the mixture in the process. The aeration gas must provide sufficient agitation to keep the solids in suspension. Provide an exit for the aeration gas from the top flange of the benchtop bioreactor through a water-cooled (e.g., Allihn-type) vertical condenser. Install the condenser through a gas-tight fitting in the benchtop bioreactor closure. Design the system so that at least 10 percent of the gas flows through an alkaline scrubber containing 175 mL of 45 percent by weight solution of potassium hydroxide (KOH) and 5 drops of 0.2 percent alizarin yellow dye. Route the balance of the gas through an adjustable scrubber bypass. Route all of the gas through a 1–L knock-out flask to remove entrained moisture and then to the intake of the blower. The blower recirculates the gas to the benchtop bioreactor.

2.1.3 *Wastewater Feed.* Supply the wastewater feed to the benchtop bioreactor in a collapsible low-density polyethylene container or collapsible liner in a container (e.g., 20 L) equipped with a spigot cap (collapsible containers or liners of other material may be required due to the permeability of some volatile compounds through polyethylene). Obtain the wastewater feed by sampling the wastewater feed in the target process. A representative sample of wastewater shall be obtained from the piping leading to the aeration tank. This sample may be obtained from existing sampling valves at the discharge of the wastewater feed pump, or collected from a pipe discharging to the aeration tank, or by pumping from a well-mixed equalization tank upstream from the aeration tank. Alternatively, wastewater can be pumped continuously to the laboratory apparatus from a bleed stream taken from the equalization tank of the full-scale treatment system.

2.1.3.1 *Refrigeration System.* Keep the wastewater feed cool by ice or by refrigeration to 4°C. If using a bleed stream from the equalization tank, refrigeration is not required if the residence time in the bleed stream is less than five minutes.

2.1.3.2 *Wastewater Feed Pump.* The wastewater is pumped from the refrigerated container using a variable-speed peristaltic pump drive equipped with a peristaltic pump head. Add the feed solution to the benchtop bioreactor through a fitting on the top flange. Determine the rate of feed addition to provide a retention time in the benchtop bioreactor that is numerically equivalent to the retention time in the target full-scale system. The wastewater shall be fed at a rate sufficient to achieve 90 to 100 percent of the target full-scale system residence time.

2.1.3.3 *Treated wastewater feed.* The benchtop bioreactor effluent exits at the bottom of the reactor through a tube and proceeds to the clarifier.

2.1.4 *Clarifier.* The effluent flows to a separate closed clarifier that allows separation of biomass and effluent (e.g., 2-liter pear-shaped glass separatory funnel, modified by removing the stopcock and adding a 25-mm OD glass tube at the bottom). Benchtop bioreactor effluent enters the clarifier through a tube inserted to a depth of 0.08 m (3 in.) through a stopper at the top of the clarifier. System effluent flows from a tube inserted through the stopper at the top of the clarifier to a drain (or sample bottle when sampling). The underflow from the clarifier leaves from the glass tube at the bottom of the clarifier. Flexible tubing connects this fitting to the sludge recycle pump. This pump is coupled to a variable speed pump drive. The discharge from this pump is returned through a tube inserted in a port on the side of the benchtop bioreactor. An additional port is provided near the bottom of the benchtop bioreactor for sampling the reactor contents. The mixed liquor from the benchtop bioreactor flows into the center of the clarifier. The clarified system effluent separates from the biomass and flows through an exit near the top of the clarifier. There shall be no headspace in the clarifier.

2.1.5 *Temperature Control Apparatus.* Capable of maintaining the system at a temperature equal to the temperature of the full-scale system. The average temperature should be maintained within ±2°C of the set point.

2.1.5.1 *Temperature Monitoring Device.* A resistance type temperature probe or a thermocouple connected to a temperature readout with a resolution of 0.1°C or better.

2.1.5.2 *Benchtop Bioreactor Heater.* The heater is connected to the temperature control device.

2.1.6 *Oxygen Control System.* Maintain the dissolved oxygen concentration at the levels present in the full-scale system. Target full-scale activated sludge systems with dissolved oxygen concentration below 2 mg/L are required to maintain the dissolved oxygen concentration in the benchtop bioreactor within 0.5 mg/L of the target dissolved oxygen level. Target full-scale activated sludge systems with dissolved oxygen concentration above 2 mg/L are required to maintain the dissolved oxygen concentration in the benchtop bioreactor within 1.5 mg/L of the target dissolved oxygen concentration; however, for target full-scale activated sludge systems with dissolved oxygen concentrations above 2 mg/L, the dissolved oxygen concentration in the benchtop bioreactor may not drop below 1.5 mg/L. If the benchtop bioreactor is outside the control range, the dissolved oxygen is noted and the reactor operation is adjusted.

2.1.6.1 *Dissolved Oxygen Monitor.* Dissolved oxygen is monitored with a polarographic probe (gas permeable membrane) connected to a dissolved oxygen meter (e.g., 0 to 15 mg/L, 0 to 50°C).

2.1.6.2 *Benchtop Bioreactor Pressure Monitor.* The benchtop bioreactor pressure is monitored through a port in the top flange of the reactor. This is connected to a gauge control with a span of 13-cm water vacuum to 13-cm water pressure or better. A relay is activated when the vacuum exceeds an adjustable setpoint which opens a solenoid valve (normally closed), admitting oxygen to the system. The vacuum setpoint controlling oxygen addition to the system shall be set at approximately 2.5 ± 0.5 cm water and maintained at this setting except during brief periods when the dissolved oxygen concentration is adjusted.

2.1.7 *Connecting Tubing.* All connecting tubing shall be Teflon or equivalent in impermeability. The only exception to this specification is the tubing directly inside the pump head of the wastewater feed pump, which may be Viton, Silicone or another type of flexible tubing. Note: Mention of trade names or products does not constitute endorsement by the U.S. Environmental Protection Agency.

2.2 *Analysis.* If the identity of the compounds of interest in the wastewater is not known, a representative sample of the wastewater shall be analyzed in order to identify all of the compounds of interest present. A gas chromatography/mass spectrometry screening method is recommended.

2.2.1 After identifying the compounds of interest in the wastewater, develop and/or use one or more analytical technique capable of measuring each of those compounds (more than one analytical technique may be required, depending on the characteristics of the wastewater). Method 18, found in appendix A of 40 CFR part 60, may be used as a guideline in developing the analytical technique. Purge and trap techniques may be used for analysis providing the target components are sufficiently volatile to make this technique appropriate. The limit of quantitation for each compound shall be determined.[1] If the effluent concentration of any target compound is below the limit of quantitation determined for that compound, the operation of the Method 304 unit may be altered to attempt to increase the effluent concentration above the limit of quantitation. Modifications to the method shall be approved prior to the test. The request should be addressed to Method 304 contact, Emissions Measurement Center, Mail Drop 19, U.S. Environmental Protection Agency, Research Triangle Park, NC 27711.

2.2.2 *Calibration Standards.* Prepare calibration standards from pure certified standards in an aqueous medium. Prepare and analyze three concentrations of calibration standards for each target component (or for a mixture of components) in triplicate daily throughout the analyses of the test samples. At each concentration level,

a single calibration shall be within 5 percent of the average of the three calibration results. The low and medium calibration standards shall bracket the expected concentration of the effluent (treated) wastewater. The medium and high standards shall bracket the expected influent concentration.

3. Reagents

3.1 *Wastewater.* Obtain a representative sample of wastewater at the inlet to the full-scale treatment plant if there is an existing full-scale treatment plant (See Section 2.1.3). If there is no existing full-scale treatment plant, obtain the wastewater sample as close to the point of determination as possible. Collect the sample by pumping the wastewater into the 20–L collapsible container. The loss of volatiles shall be minimized from the wastewater by collapsing the container before filling, by minimizing the time of filling, and by avoiding a headspace in the container after filling. If the wastewater requires the addition of nutrients to support the biomass growth and maintain biomass characteristics, those nutrients are added and mixed with the container contents after the container is filled.

3.2 *Biomass.* Obtain the biomass or activated sludge used for rate constant determination in the bench-scale process from the existing full-scale process or from a representative biomass culture (e.g., biomass that has been developed for a future full-scale process). This biomass is preferentially obtained from a thickened acclimated mixed liquor sample. Collect the sample either by bailing from the mixed liquor in the aeration tank with a weighted container, or by collecting aeration tank effluent at the effluent overflow weir. Transport the sample to the laboratory within no more than 4 hours of collection. Maintain the biomass concentration in the benchtop bioreactor at the level of the target full-scale system +10 percent throughout the sampling period of the test method.

4. Procedure

Safety Note: If explosive gases are produced as a byproduct of biodegradation and could realistically pose a hazard, closely monitor headspace concentration of these gases to ensure laboratory safety. Placement of the benchtop bioreactor system inside a laboratory hood is recommended regardless of byproducts produced.

4.1 *Benchtop Bioreactor Operation.* Charge the mixed liquor to the benchtop bioreactor, minimizing headspace over the liquid surface to minimize entrainment of mixed liquor in the circulating gas. Fasten the benchtop bioreactor headplate to the reactor over the liquid surface. Maintain the temperature of the contents of the benchtop bioreactor system at the temperature of the target full-scale system, +2 °C, throughout the testing period. Monitor and record the temperature of the reactor contents at least to the nearest 0.1 °C.

4.1.1 *Wastewater Storage.* Collect the wastewater sample in the 20–L collapsible container. Store the container at 4 °C throughout the testing period. Connect the container to the benchtop bioreactor feed pump.

4.1.2 *Wastewater Flow Rate.* The hydraulic residence time of the aeration tank is calculated as the ratio of the volume of the tank (L) to the flow rate (L/min). At the beginning of a test, the container shall be connected to the feed pump and solution shall be pumped to the benchtop bioreactor at the required flow rate to achieve the calculated hydraulic residence time of wastewater in the aeration tank.

$$Q_{test} = Q_{fs} \frac{L}{V_{fs}} \qquad \text{Eqn 304B} - 1$$

Where:

Q_{test}=wastewater flow rate (L/min)

Q_{fs}=average flow rate of full-scale process (L/min)

V_{fs}=volume of full-scale aeration tank (L)

The target flow rate in the test apparatus is the same as the flow rate in the target full-scale process multiplied by the ratio of benchtop bioreactor volume (e.g., 6 L) to the volume of the full-scale aeration tank. The hydraulic residence time shall be maintained at 90 to 100 percent of the residence time maintained in the target full-scale unit. A nominal flow rate is set on the pump based on a pump calibration. Changes in the elasticity of the tubing in the pump head and the accumulation of material in the tubing affect this calibration. The nominal pumping rate shall be changed as necessary based on volumetric flow measurements. Discharge the benchtop bioreactor effluent to a wastewater storage, treatment, or disposal facility, except during sampling or flow measurement periods.

4.1.3 *Sludge Recycle Rate.* Set the sludge recycle rate at a rate sufficient to prevent accumulation in the bottom of the clarifier. Set the air circulation rate sufficient to maintain the biomass in suspension.

4.1.4 *Benchtop Bioreactor Operation and Maintenance.* Temperature, dissolved oxygen concentration, flow rate, and air circulation rate shall be measured and recorded three times throughout each day of testing. If other parameters (such as pH) are measured and maintained in the target full-scale unit, these parameters shall, where appropriate, be monitored and maintained to full-scale specifications in the benchtop bioreactor. At the beginning of each sampling period (section 4.2), sample the benchtop bioreactor contents for suspended solids analysis. Take this sample by loosening a clamp on a length of tubing attached to the lower side port. Determine the suspended solids gravimetrically by the Gooch crucible/glass fiber filter method for total suspended solids, in accordance with Standard Methods[3] or equivalent. When necessary, sludge shall be wasted from the lower side port of the benchtop bioreactor, and the volume that is wasted shall be replaced with an equal volume of the benchtop bioreactor effluent. Add thickened activated sludge mixed liquor as necessary to the benchtop bioreactor to increase the suspended solids concentration to the desired level. Pump this mixed liquor to the benchtop bioreactor through the upper side port (Item 24 in Figure 1). Change the membrane on the dissolved oxygen probe before starting the test. Calibrate the oxygen probe immediately before the start of the test and each time the membrane is changed. The scrubber solution shall be replaced each weekday with 175 mL 45 percent W/W KOH solution to which five drops of 0.2 percent alizarin yellow indicator in water have been added. The potassium hydroxide solution in the alkaline scrubber shall be changed if the alizarin yellow dye color changes.

4.1.5 *Inspection and Correction Procedures.* If the feed line tubing becomes clogged, replace with new tubing. If the feed flow rate is not within 5 percent of target flow any time the flow rate is measured, reset pump or check the flow measuring device and measure flow rate again until target flow rate is achieved.

4.2 *Test Sampling.* At least two and one half hydraulic residence times after the system has reached the targeted specifications shall be permitted to elapse before the first sample is taken. Effluent samples of the clarifier discharge (Item 20 in Figure 1) and the influent wastewater feed are collected in 40-mL septum vials to which two drops of 1:10 hydrochloric acid (HCl) in water have been added. Sample the clarifier discharge directly from the drain line. These samples will be composed of the entire flow from the system for a period of several minutes. Feed samples shall be taken from the feed pump suction line after temporarily stopping the benchtop bioreactor feed, removing a connector, and squeezing the collapsible feed container. Store both influent and effluent samples at 4°C immediately after collection and analyze within 8 hours of collection.

4.2.1 *Frequency of Sampling.* During the test, sample and analyze the wastewater feed and the clarifier effluent at least six times. The sampling intervals shall be separated by at least 8 hours. During any individual sampling interval, sample the wastewater feed simultaneously with or immediately after the effluent sample. Calculate the RSD of the amount removed (i.e., effluent concentration—wastewater feed concentration). The RSD values shall be < 15 percent. If an RSD value is > 15 percent, continue sampling and analyzing influent and effluent sets of samples until the RSD values are within specifications.

4.2.2 *Sampling After Exposure of System to Atmosphere.* If, after starting sampling procedures, the benchtop bioreactor system is exposed to the atmosphere (due to leaks, maintenance, etc.), allow at least one hydraulic residence time to elapse before resuming sampling.

5. Operational Checks and Calibration

5.1 *Dissolved Oxygen.* Fluctuation in dissolved oxygen concentration may occur for numerous reasons, including undetected gas leaks, increases and decreases in mixed liquor suspended solids resulting from cell growth and solids loss in the effluent stream, changes in diffuser performance, cycling of effluent flow rate, and overcorrection due to faulty or sluggish dissolved oxygen probe response. Control the dissolved oxygen concentration in the benchtop bioreactor by changing the proportion of oxygen in the circulating aeration gas. Should the dissolved oxygen concentration drift below the designated experimental condition, bleed a small amount of aeration gas from the system

on the pressure side (i.e., immediately upstream of one of the diffusers). This will create a vacuum in the system, triggering the pressure sensitive relay to open the solenoid valve and admit oxygen to the system. Should the dissolved oxygen concentration drift above the designated experimental condition, slow or stop the oxygen input to the system until the dissolved oxygen concentration approaches the correct level.

5.2 *Sludge Wasting.* Determine the suspended solids concentration (section 4.1.4) at the beginning of a test, and once per day thereafter during the test. If the test is completed within a two day period, determine the suspended solids concentration after the final sample set is taken. If the suspended solids concentration exceeds the specified concentration, remove a fraction of the sludge from the benchtop bioreactor. The required volume of mixed liquor to remove is determined as follows:

$$V_w = V_r\left(\frac{S_m - S_s}{S_m}\right) \qquad \text{Eqn 304B} - 2$$

Where:
V_w is the wasted volume (Liters),
V_r is the volume of the benchtop bioreactor (Liters),
S_m is the measured solids (g/L), and
S_s is the specified solids (g/L).

Remove the mixed liquor from the benchtop bioreactor by loosening a clamp on the mixed liquor sampling tube and allowing the required volume to drain to a graduated flask. Clamp the tube when the correct volume has been wasted. Replace the volume of the liquid wasted by pouring the same volume of effluent back into the benchtop bioreactor. Dispose of the waste sludge properly.

5.3 *Sludge Makeup.* In the event that the suspended solids concentration is lower than the specifications, add makeup sludge back into the benchtop bioreactor. Determine the amount of sludge added by the following equation:

$$V_w = V_r\left(\frac{S_s - S_m}{S_w}\right) \qquad \text{Eqn 304B} - 3$$

Where:
V_w is the volume of sludge to add (Liters),
V_r is the volume of the benchtop bioreactor (Liters),
S_w is the solids in the makeup sludge (g/L),
S_m is the measured solids (g/L), and
S_s is the specified solids (g/L).

5.4 *Wastewater Pump Calibration.* Determine the wastewater flow rate by collecting the system effluent for a time period of at least one hour, and measuring the volume with a graduated cylinder. Record the collection time period and volume collected. Determine flow rate. Adjust the pump speed to deliver the specified flow rate.

6. Calculations

6.1 *Nomenclature.* The following symbols are used in the calculations.

C_i=Average inlet feed concentration for a compound of interest, as analyzed (mg/L)
C_o=Average outlet (effluent) concentration for a compound of interest, as analyzed (mg/L)
X=Biomass concentration, mixed liquor suspended solids (g/L)
t=Hydraulic residence time in the benchtop bioreactor (hours)
V=Volume of the benchtop bioreactor (L)
Q=Flow rate of wastewater into the benchtop bioreactor, average (L/hour)

6.2 *Residence Time.* The hydraulic residence time of the benchtop bioreactor is equal to the ratio of the volume of the benchtop bioreactor (L) to the flow rate (L/h)

$$t = \frac{V}{Q} \qquad \text{Eqn 304B} - 4$$

6.3 *Rate of Biodegradation.* Calculate the rate of biodegradation for each component with the following equation:

$$\text{Rate}\left(\frac{mg}{L-h}\right) = \frac{C_i - C_o}{t} \qquad \text{Eqn 304B} - 5$$

6.4 *First-Order Biorate Constant.* Calculate the first-order biorate constant (K1) for each component with the following equation:

$$K1\left(\frac{L}{g-h}\right) = \frac{C_i - C_o}{t\,C_o X} \qquad \text{Eqn 304B} - 6$$

6.5 *Relative Standard Deviation (RSD).* Determine the standard deviation of both the influent and effluent sample concentrations (S) using the following equation:

$$RSD = \frac{100}{\bar{S}}\left(\sum_{i=1}^{n}\frac{\left(S_i - \bar{S}\right)^2}{(n-1)}\right)^{1/2} \qquad \text{Eqn 304B} - 7$$

6.6 *Determination of Percent Air Emissions and Percent Biodegraded.* Use the results from this test method and follow the applicable procedures in appendix C of 40 CFR part 63, entitled, ''Determination of the Fraction Biodegraded (F_{bio}) in a Biological Treatment Unit'' to determine F_{bio}.

7. Bibliography

1. ''Guidelines for data acquisition and data quality evaluation in Environmental Chemistry'', Daniel MacDoughal, Analytical Chemistry, Volume 52, p. 2242, 1980.

2. Test Method 18, 40 CFR part 60, Appendix A.

3. Standard Methods for the Examination of Water and Wastewater, 16th Edition, Method 209C, Total Suspended Solids Dried at 103–105 °C, APHA, 1985.

4. Water7, Hazardous Waste Treatment, Storage, and disposal Facilities (TSDF)—Air Emission Models, U.S. Environmental Protection Agency, EPA–450/3–87–026, Review Draft, November 1989.

5. Chemdat7, Hazardous Waste Treatment, Storage, and Disposal Facilities (TSDF)—Air Emission Models, U.S. Environmental Protection Agency, EPA–450/3–87–026, Review Draft, November 1989.

52. Appendix C of part 63 is revised to read as follows:

Appendix C to Part 63—Determination of the Fraction Biodegraded (F_{bio}) in a Biological Treatment Unit

I. Purpose

The purpose of this appendix is to define the procedures for an owner or operator to use to calculate the site specific fraction of organic compounds biodegraded (F_{bio}) in a biological treatment unit. If an acceptable level of organic compounds is destroyed rather than emitted to the air or remaining in the effluent, the biological treatment unit may be used to comply with the applicable treatment requirements without the unit being covered and vented through a closed vent system to an air pollution control device.

The determination of F_{bio} shall be made on a system as it would exist under the rule. The owner or operator should anticipate changes that would occur to the wastewater flow and concentration of organics, to be treated by the biological treatment unit, as a result of enclosing the collection and treatment system as required by the rule.

The forms presented in this appendix are designed to address uniform well-mixed or completely mixed systems. Uniform well-mixed or completely mixed systems are biological treatment activated sludge systems where measurements of parameters that indicate performance, e.g., MLVSS, organic compound concentration, and dissolved oxygen, are consistent throughout the system.

Systems that are not uniform well-mixed systems should be subdivided into a series of zones that have uniform characteristics within each zone.

The number of zones required to characterize a biological treatment system will depend on the design and operation of the treatment system. The number of zones could vary from one in a well-mixed conventional activated sludge tank to numerous zones in a large surface-aerated impoundment system. Each zone should then be modeled as a separate unit. The amount of air emissions and biodegradation from the modeling of these separate zones can then be added to reflect the entire system.

II. Definitions

Biological treatment unit = wastewater treatment unit designed and operated to promote the growth of bacteria to destroy organic materials in wastewater.

f_{bio} = The fraction of individual applicable organic compounds in the wastewater biodegraded in a biological treatment unit.

F_{bio} = The fraction of total applicable organic compounds in the wastewater biodegraded in a biological treatment unit.

Fe = The fraction of applicable organic compounds emitted from the wastewater to the atmosphere.

K1 = First order biodegradation rate constant, L/g MLVSS-hr

KL = liquid-phase mass transfer coefficient, m/s

M = compound specific mass flow weighted average of organic compounds in the wastewater, Mg/Yr

III. Procedures for Determination of f_{bio}

The first step in the analysis to determine if a biological treatment unit may be used without being covered and vented through a closed-vent system to an air pollution control device, is to determine the compound-specific f_{bio}. The following four procedures may be used to determine f_{bio}:

(1) EPA Test Method 304A or 304B (appendix A, part 63)—Method for the Determination of Biodegradation Rates of Organic Compounds,

(2) Performance data with and without biodegradation,

(3) Inlet and outlet concentration measurements,

(4) Batch Tests.

All procedures must be executed so that the resulting F_{bio} is based on the collection system and waste management units being in compliance with the regulation. If the collection system and waste management units meet the suppression requirements at the time of the test, any of the four procedures may be chosen. If the collection system and waste management units are not in compliance at the time of the performance test, then only Method 304A, 304B, or the Batch Test shall be chosen. If Method 304A, 304B, or the Batch Test is used, any anticipated changes to the influent of the full-scale biological treatment unit that will occur after the facility has enclosed the collection system must be represented in the influent feed to the benchtop bioreactor unit, or test unit.

Select one or more appropriate procedures from the four listed above based on the availability of site specific data. If the facility does not have site-specific data on the removal efficiency of its biological treatment unit, then Procedure 1 or Procedure 4 may be used. Procedure 1 allows the use of a benchtop bioreactor to determine the first-order biodegradation rate constant. For compounds that represent a small proportion of the mass of the regulated compounds in the wastewater, an owner or operator may elect to assume the first order biodegradation constant is zero. Procedure 4 explains two types of batch tests which may be used to estimate the first order biodegradation rate constant. For compounds that represent a small proportion of the mass of the regulated compounds in the wastewater, an owner or operator may elect to assume the first order biodegradation constant is zero. Procedure 3 would be used if the facility has, or measures to determine, data on the inlet and outlet individual organic compound concentration for the biological treatment unit. Procedure 3 may only be used on a uniform well-mixed or completely mixed system. Procedure 2 is used if a facility has or obtains performance data on a biotreatment unit prior to and after addition of the microbial mass. An example where Procedure 2 could be used, is an activated sludge unit where measurements have been taken on inlet and exit concentration of organic compounds in the wastewater prior to seeding with the microbial mass and start-up of the unit. The flow chart in Figure 1 outlines the steps to use for each of the procedures.

A. Method 304A or 304B (Procedure 1)

If the first procedure is selected, follow the instructions in appendix A of part 63 Method 304A ''Method for the Determination of Biodegradation Rates of Organic Compounds (Vented Option)'' or Method 304B ''Method for the Determination of Biodegradation Rates of Organic Compounds (Scrubber Option).'' Method 304A or 304B provides instruction on setting up and operating a self-contained benchtop bioreactor system which is operated under conditions representative of the target full-scale system. Method 304A uses a benchtop bioreactor system with a vent, and uses modeling to estimate any air emissions. Method 304B uses a benchtop bioreactor system which is equipped with a scrubber and is not vented.

There are some restrictions on which method a source may use. If the facility is measuring the rate of biodegradation of compounds that may tend to react or hydrolyze in the scrubber of Method 304B, this method shall not be used and Method 304A is the required method. If a Henry's law value is not available to use with Form V, then Method 304A shall not be used and Method 304B is the required method. When using either method, the feed flow to the benchtop bioreactor shall be representative of the flow and concentration of the wastewater that will be treated by the full-scale biological treatment unit after the collection and treatment system has been enclosed as required under the applicable subpart.

The conditions under which the full-scale biological treatment unit is run establish the operating parameters of Method 304A or 304B. If the biological treatment unit is operated under abnormal operating conditions (conditions outside the range of critical parameters examined and confirmed in the laboratory), the EPA believes this will adversely affect the biodegradation rate and is an unacceptable treatment option. The facility would be making multiple runs of the test method to simulate the operating range for its biological treatment unit. For wide ranges of variation in operating parameters, the facility shall demonstrate the biological treatment unit is achieving an acceptable level of control, as required by the regulation, across the ranges and not only at the endpoints.

If Method 304A is used, complete Form V initially. Form V is used to calculate K1 from the Method 304A results. Form V uses the Henry's law constant to estimate the fraction lost from the benchtop reactor vent. The owner or operator shall use the Henry's law values in Table I. Form V also gives direction for calculating an equivalent KL. Note on Form V if the calculated number for line 11 is greater than the calculated value for line 13, this procedure shall not be used to demonstrate the compound is biodegradable. If line 11 is greater than line 13, this is an indication the fraction emitted from the vent is greater than the fraction biodegraded. The equivalent KL determined on Form V is used in Form II (line 6). Estimation of the Fe and f_{bio} must be done following the steps in Form III. Form III uses the previously calculated values of K1 and KL (equivalent KL), and site-specific parameters of the full-scale bioreactor as input to the calculations. Forms II, III, and V must be completed for each organic compound in the wastewater to determine Fe and f_{bio}.

If Method 304B is used, perform the method and use the measurements to determine K1, which is the first-order biodegradation rate constant. Form I lists the sequence of steps in the procedure for calculating K1 from the Method 304B results. Once K1 is determined, KL must be calculated by use of mass transfer equations. Form II outlines the procedure to follow for use of mass transfer equations to determine KL. A computer program which incorporates these mass transfer equations may be used. Water7 is a program that incorporates these mass transfer equations and may be used to determine KL. Refer to Form II–A to determine KL, if Water7 or the most recent update to this model is used. In addition, the Bay Area Sewage Toxics Emission (BASTE) model version 3.0 or equivalent upgrade and the TOXCHEM (Environment Canada's Wastewater Technology Centre and Environmega, Ltd.) model version 1.10 or equivalent upgrade may also be used to determine KL for the biological treatment unit with several stipulations. The programs must be altered to output a KL value which is based on the site-specific parameters of the unit modeled, and the Henry's law values listed in Table I must be substituted for the existing Henry's law values in the programs. Input values used in the model and corresponding output values shall become documentation of the f_{bio} determination. The owner or operator should be aware these programs do not allow modeling of certain

units. To model these units, the owner or operator shall use one of the other appropriate procedures as outlined in this appendix. The owner or operator shall not use a default value for KL. The KL value determined by use of these models shall be based on the site-specific parameters of the specific unit. This KL value shall be inserted in Form II (line 6). Estimation of the Fe and f_{bio} must be done following the steps in Form III. Form III uses the previously calculated values of K1 and KL, and site-specific parameters of the full-scale bioreactor as input to the calculations. Forms I, II, and III must be completed for each organic compound in the wastewater to determine Fe and $f_{bio.}$

B. Performance Data With and Without Biodegradation (Procedure 2)

Procedure 2 uses site-specific performance data that represents or characterizes operation of the unit both with and without biodegradation. As previously mentioned, proper determination of f_{bio} must be made on a system as it would exist under the rule. Using Form IV, calculate KL and K1. After KL and K1 are determined, Form III is used to calculate Fe and f_{bio} for each organic compound present in the wastewater.

C. Inlet and Outlet Concentration Measurements (Procedure 3)

Procedure 3 uses measured inlet and outlet organic compound concentrations for the unit. This procedure may only be used on a uniform well-mixed or completely mixed system. Again, proper determination of f_{bio} must be made on a system as it would exist under the rule. The first step in using this procedure is to calculate KL using Form II. A computer model may be used. If the Water7 model or the most recent update to this model is used, then use Form II–A to calculate KL. After KL is determined using field data, complete Form VI to calculate K1. The TOXCHEM or BASTE model may also be used to calculate KL for the biological treatment unit, with the stipulations listed in procedure 304B. After KL and K1 are determined, Form III is used to calculate Fe and f_{bio} for each organic compound.

D. Batch Tests (Procedure 4)

Two types of batch tests which may be used to determine kinetic parameters are: (1) The aerated reactor test and (2) the sealed reactor test. The aerated reactor test is also known as the BOX test (batch test with oxygen addition). The sealed reactor test is also known as the serum bottle test. These batch tests should be conducted only by persons familiar with procedures for determining biodegradation kinetics. Detailed discussions of batch procedures for determining biodegradation kinetic parameters can be found in references 1–4.

For both batch test approaches, a biomass sample from the activated sludge unit of interest is collected, aerated, and stored for no more than 4 hours prior to testing. To collect sufficient data when biodegradation is rapid, it may be necessary to dilute the biomass sample. If the sample is to be diluted, the biomass sample shall be diluted using treated effluent from the activated sludge unit of interest to a concentration such that the biodegradation test will last long enough to make at least six concentration measurements. It is recommended that the tests not be terminated until the compound concentration falls below the limit of quantitation (LOQ). Measurements that are below the LOQ should not be used in the data analysis. Biomass concentrations shall be determined using standard methods for measurement of mixed liquor volatile suspended solids (MLVSS) (reference 5).

The change in concentration of a test compound may be monitored by either measuring the concentration in the liquid or in the reactor headspace. The analytical technique chosen for the test should be as sensitive as possible. For the batch test procedures described in this section, equilibrium conditions must exist between the liquid and gas phases of the experiments because the data analysis procedures are based on this premise. To use the headspace sampling approach, the reactor headspace must be in equilibrium with the liquid so that the headspace concentrations can be correlated with the liquid concentrations. Before the biodegradation testing is conducted, the equilibrium assumption must be verified. A discussion of the equilibrium assumption verification is given below in sections D.1 and D.2 since different approaches are required for the two types of batch tests.

To determine biodegradation kinetic parameters in a batch test, it is important to choose an appropriate initial substrate (compound(s) of interest) concentration for the test. The outcome of the batch experiment may be influenced by the initial substrate (S_O) to biomass (X_O) ratio (see references 3, 4, and 6). This ratio is typically measured in chemical oxygen demand (COD) units. When the S_O/X_O ratio is low, cell multiplication and growth in the batch test is negligible and the kinetics measured by the test are representative of the kinetics in the activated sludge unit of interest. The S_O/X_O ratio for a batch test is determined with the following equation:

$$\frac{S_0}{X_0} = \frac{S_i}{1.42\ X} \quad \text{(Eqn App. C – 1)}$$

Where:

S_O/X_O=initial substrate to biomass ratio on a COD basis

S_i=initial substrate concentration in COD units (g COD/L)

X=biomass concentration in the batch test (g MLVSS/L)

1.42 = Conversion factor to convert to COD units

For the batch tests described in this section, the S_O/X_O ratio (on a COD basis) must be initially less than 0.5.

1. *Aerated Reactor Test.* An aerated draft tube reactor may be used for the biokinetics testing (as an example see Figure 2 of appendix C). Other aerated reactor configurations may also be used. Air is bubbled through a porous frit at a rate sufficient to aerate and keep the reactor uniformly mixed. Aeration rates typically vary from 50 to 200 ml/min for a 1 liter system. A mass flow rate controller is used to carefully control the air flow rate because it is important to have an accurate measure of this rate. The dissolved oxygen (DO) concentration in the system must not fall below 2 mg/liter so that the biodegradation observed will not be DO-limited. Once the air flow rate is established, the test mixture (or compound) of interest is then injected into the reactor and the concentration of the compound(s) is monitored over time. Concentrations may be monitored in the liquid or in the headspace. A minimum of six samples shall be taken over the period of the test. However, it is necessary to collect samples until the compound concentration falls below the LOQ. If liquid samples are collected, they must be small enough such that the liquid volume in the batch reactor does not change by more than 10%.

Before conducting experiments with biomass, it is necessary to verify the equilibrium assumption. The equilibrium assumption can be verified by conducting a stripping experiment using the effluent (no biomass) from the activated sludge unit of interest. Effluent is filtered with a 0.45 um or smaller filter and placed in the draft tube reactor. Air is sparged into the system and the compound concentration in the liquid or headspace is monitored over time. This test with no biomass may provide an estimate of the Henry's law constant. If the system is at equilibrium, the Henry's law constant may be estimated with the following equation:

$$-\ln\left(C / C_0\right) = \left(GK_{eq} / V\right)t \qquad \text{(Eqn App. C – 2)}$$

26Where:

C=cencentration at time, t (min)

C_O=concentration at t=0

G=volumetric gas flow rate (ml/min)

V=liquid volume in the batch reactor (ml)

K_{eq}=Henry's law constant (mg/L-gas)/(mg/L-liquid)

t=time (min)

A plot of—ln(C/C_o) as a function of t will have a slope equal to GK_{eq}/V. The equilibrium assumption can be verified by comparing the experimentally determined K_{eq} for the system to literature values of the Henry's Law constant (including those listed in this appendix). If K_{eq} does not match the Henry's law constant, K_{eq} shall be determined from analysis of the headspace and liquid concentration in a batch system.

The concentration of a compound decreases in the bioreactor due to both biodegradation and stripping. Biodegradation processes are typically described with a Monod model. This model and a stripping expression are combined to give a mass balance for the aerated draft tube reactor):

$$-\frac{ds}{dt}=\left(\frac{GK_{eq}}{V}\right)s+\left(\frac{Q_mX}{K_s+s}\right)s \qquad \text{(Eqn App. C}-3\text{)}$$

Where:

s=test compound concentration, mg/liter
G=volumetric gas flow rate, liters/hr
K_{eq}=Henry's Law constant measured in the system, (mg/liter gas)/(mg/liter liquid)
V=volume of liquid in the reactor, liters
X=biomass concentration (g MLVSS/liter)
Q_m=maximum rate of substrate removal, mg/g MLVSS/hr
K_S=Monod biorate constant at half the maximum rate, mg/liter

Equation App.C–3 has the analytical solution:

$$-t=\frac{VK_s}{A}\ln\left(\frac{s}{s_0}\right)+\frac{Q_mXV^2}{AB}\ln\left(\frac{A+Bs}{A+Bs_0}\right) \qquad \text{(Eqn App. C}-4\text{)}$$

Where:

$A=GK_{eq}K_S+Q_mVX$
$B=GK_{eq}$
S_O=test compound concentration at t=0

This equation is used along with the substrate concentration versus time data to determine the best fit parameters (Q_m and K_S) to describe the biodegradation process in the aerated reactor. If the aerated reactor test is used, the following procedure is used to analyze the data. Evaluate K_{eq} for the compound of interest with Form XI. The concentration in the vented headspace or liquid is measured as a function of time and the data is entered on Form XI. A plot is made from the data and attached to the Form XI. K_{eq} is calculated on Form XI and the results are contrasted with the expected value of Henry's law obtained from Form IX. If the comparison is satisfactory, the stripping constant is calculated from K_{eq}, completing Form XI. The values of K_{eq} may differ because the theoretical value of K_{eq} may not be applicable to the system of interest. If the comparison of the calculated K_{eq} from the form and the expected value of Henry's law is unsatisfactory, Form X can alternatively be used to validate K_{eq}. If the aerated reactor is demonstrated to not be at equilibrium, either modify the reactor design and/or operation, or use another type of batch test.

The compound-specific biorate constants are then measured using Form XII. The stripping constant that was determined from Form XI and a headspace correction factor of 1 are entered on Form XII. The aerated reactor biotest may then be run, measuring concentrations of each compound of interest as a function of time. If headspace concentrations are measured instead of liquid concentrations, then the corresponding liquid concentrations are calculated from the headspace measurements using the K_{eq} determined on Form XI and entered on Form XII.

The concentration data on Form XII may contain scatter that can adversely influence the data interpretation. It is possible to curve fit the concentration data and enter the concentrations on the fitted curve instead of the actual data. If curve fitting is used, the curve-fitting procedure must be based upon the Equation App. C–4. When curve fitting is used, it is necessary to attach a plot of the actual data and the fitted curve to Form XII.

If the stripping rate constant is relatively large when compared to the biorate at low concentrations, it may be difficult to obtain accurate evaluations of the first-order biorate constant. In these cases, either reducing the stripping rate constant by lowering the aeration rate, or increasing the biomass concentrations should be considered.

The final result of the batch testing is the measurement of a biorate that can be used to estimate the fraction biodegraded, f_{bio}. The number transferred to Form III is obtained from Form XII, line 9.

2. *Sealed Reactor Test.* This test uses a closed system to prevent losses of the test compound by volatilization. This test may be conducted using a serum bottle or a sealed draft tube reactor (for an example see Figure 3 of appendix C). Since no air is supplied, it is necessary to ensure that sufficient oxygen is present in the system. The DO concentration in the system must not fall below 2 mg/liter so that the biodegradation observed will not be DO-limited. As an alternative, oxygen may be supplied by electrolysis as needed to maintain the DO concentration above 2 mg/liter. The reactor contents must be uniformly mixed, by stirring or agitation using a shaker or similar apparatus. The test mixture (or compound) of interest is injected into the reactor and the concentration is monitored over time. A minimum of six samples shall be taken over the period of the test. However, it is necessary to monitor the concentration until it falls below the LOQ.

The equilibrium assumption must be verified for the batch reactor system. In this case, K_{eq} may be determined by simultaneously measuring gas and liquid phase concentrations at different times within a given experiment. A constant ratio of gas/liquid concentrations indicates that equilibrium conditions are present and K_{eq} is not a function of concentration. This ratio is then taken as the K_{eq} for the specific compound in the test. It is not necessary to measure K_{eq} for each experiment. If the ratio is not constant, the equilibrium assumption is not valid and it is necessary to (1) increase mixing energy for the system and retest for the equilibrium assumption, or (2) use a different type of test (for example, a collapsible volume reactor).

The concentration of a compound decreases in the bioreactor due to biodegradation according to Equation App. C–5:

$$\frac{ds}{dt}=\left[\frac{-V_1}{V_gK_{eq}+V_1}\right]\left[\left(\frac{Q_mX}{K_s+s}\right)s\right] \qquad \text{(Eqn App. C}-5\text{)}$$

Where:

s=test compound concentration (mg/liters)
V_l=the average liquid volume in the reactor (liters)
V_g=the average gas volume in the reactor (liters)
Q_m=maximum rate of substrate removal (mg/g *ML*VSS/hr)
K_{eq}=Henry's Law constant determined for the test, (mg/liter gas)/(mg/liter liquid)
K_s=Monod biorate constant at one-half the maximum rate (mg/liter)
t=time (hours)
X=biomass concentration (g *ML*VSS/liter)
s_o=test compound concentration at time t=0

Equation App. C–5 can be solved analytically to give:

$$t = \frac{-\left(V_s K_{eg} + V_l\right)}{V_l Q_m X}\left[\left(s - s_0\right) + K_s \ln\left(\frac{s}{s_0}\right)\right] \qquad \text{(Eqn App. C – 6)}$$

This equation is used along with the substrate concentration versus time data to determine the best fit parameters (Q_m and K_s) to describe the biodegradation process in the sealed reactor.

If the sealed reactor test is used, Form X is used to determine the headspace correction factor. The disappearance of a compound in the sealed reactor test is slowed because a fraction of the compound is not available for biodegradation because it is present in the headspace. If the compound is almost entirely in the liquid phase, the headspace correction factor is approximately one. If the headspace correction factor is substantially less than one, improved mass transfer or reduced headspace may improve the accuracy of the sealed reactor test. A preliminary sealed reactor test must be conducted to test the equilibrium assumption. As the compound of interest is degraded, simultaneous headspace and liquid samples should be collected and Form X should be used to evaluate K_{eq}. The ratio of headspace to liquid concentrations must be constant in order to confirm that equilibrium conditions exist. If equilibrium conditions are not present, additional mixing or an alternate reactor configuration may be required.

The compound-specific biorate constants are then calculated using Form XII. For the sealed reactor test, a stripping rate constant of zero and the headspace correction factor that was determined from Form X are entered on Form XII. The sealed reactor test may then be run, measuring the concentrations of each compound of interest as a function of time. If headspace concentrations are measured instead of liquid concentrations, then the corresponding liquid concentrations are calculated from the headspace measurements using K_{eq} from Form X and entered on Form XII.

The concentration data on Form XII may contain scatter that can adversely influence the data interpretation. It is possible to curve fit the concentration data and enter the concentrations on the fitted curve instead of the actual data. If curve fitting is used, the curve-fitting procedure must be based upon Equation App. C–6. When curve fitting is used, it is necessary to attach a plot of the actual data and the fitted curve to Form XII.

If a sealed collapsible reactor is used that has no headspace, the headspace correction factor will equal 1, but the stripping rate constant may not equal 0 due to diffusion losses through the reactor wall. The ratio of the rate of loss of compound to the concentration of the compound in the reactor (units of per hour) must be evaluated. This loss ratio has the same units as the stripping rate constant and may be entered as the stripping rate constant on line 1 of Form XII.

If the loss due to diffusion through the walls of the collapsible reactor is relatively large when compared to the biorate at low concentrations, it may be difficult to obtain accurate evaluations of the first-order biorate constant. In these cases, either replacing the materials used to construct the reactor with materials of low permeability or increasing the biomass concentration should be considered.

The final result of the batch testing is the measurement of a biorate that can be used to estimate the fraction biodegraded, f_{bio}. The number transferred to Form III is obtained from Form XII, line 9.

The number on Form XII line 9 will equal the Monod first-order biorate constant if the full-scale system is operated in the first-order range. If the full-scale system is operated at concentrations above that of the Monod first-order range, the value of the number on line 9 will be somewhat lower than the Monod first-order biorate constant. With supporting biorate data, the Monod model used in Form XII may be used to estimate the effective biorate constant K1 for use in Form III.

If a reactor with headspace is used, analysis of the data using equation App. C–6 is valid only if V_l and V_g do not change more than 10% (i.e., they can be approximated as constant for the duration of the test). Since biodegradation is occurring only in the liquid, as the liquid concentration decreases it is necessary for mass to transfer from the gas to the liquid phase. This may require vigorous mixing and/or reducing the volume in the headspace of the reactor.

If there is no headspace (e.g., a collapsible reactor), equation App. C–6 is independent of V_1 and there are no restrictions on the liquid volume. If a membrane or bag is used as the collapsible-volume reactor, it may be important to monitor for diffusion losses in the system. To determine if there are losses, the bag should be used without biomass and spiked with the compound(s) of interest. The concentration of the compound(s) in the reactor should be monitored over time. The data are analyzed as described above for the sealed reactor test.

3. *Quality Control/Quality Assurance (QA/QC).* A QA/QC plan outlining the procedures used to determine the biodegradation rate constants shall be prepared and a copy maintained at the source. The plan should include, but may not be limited to:

1. A description of the apparatus used (e.g., size, volume, method of supplying air or oxygen, mixing, and sampling procedures) including a simplified schematic drawing.
2. A description of how biomass was sampled from the activated sludge unit.
3. A description of how biomass was held prior to testing (age, etc.).
4. A description of what conditions (DO, gas-liquid equilibrium, temperature, etc.) are important, what the target values are, how the factors were controlled, and how well they were controlled.
5. A description of how the experiment was conducted, including preparation of solutions, dilution procedures, sampling procedures, monitoring of conditions, etc.
6. A description of the analytical instrumentation used, how the instruments were calibrated, and a summary of the precision for that equipment.
7. A description of the analytical procedures used. If appropriate, reference to an ASTM, EPA or other procedure may be used. Otherwise, describe how the procedure is done, what is done to measure precision, accuracy, recovery, etc., as appropriate.
8. A description of how data are captured, recorded, and stored.
9. A description of the equations used and their solutions, including a reference to any software used for calculations and/or curve-fitting.

IV. Calculation of F_{bio}

At this point, the individual f_{bios} determined by the previously explained procedures must be summed to obtain the total F_{bio}. To determine the F_{bio} multiply each compound specific f_{bio} by the compound-specific average mass flow rate of the organic compound in the wastewater stream (see regulation for instruction on calculation of average mass flow rate). Sum these products and divide by the total wastewater stream average mass flow rate of organic compounds.

$$F_{bio} = \frac{\sum_{i=1}^{N}\left(f_{bio}i \times M_i\right)}{\sum_{i=1}^{n} M_i} \qquad \text{(Eqn App. C – 7)}$$

M=compound specific average mass flow rate of the organic compounds in the wastewater (Mg/Yr)

n=number of organic compounds in the wastewater

The F_{bio} is then used in the applicable compliance equations in the regulation to determine if biodegradation may be used to comply with the treatment standard without covering and venting to an air pollution control device.

References

1. Rajagopalan, S. et al. ''Comparison of Methods for Determining Biodegradation Kinetics of Volatile Organic Compounds.'' Proceedings of Water Environment Federation. 67th Annual Conference, October 15–19, 1994.

2. Ellis, T.G. et al. ''Determination of Toxic Organic Chemical Biodegradation Kinetics Using Novel Respirometric Technique''. Proceedings Water Environment Federation, 67th Annual Conference, October 15–19, 1994.

3. Pitter, P. and J. Chudoba. Biodegradability of Organic Substances in the Aquatic Environment. CRC Press, Boca Raton, FL. 1990.

4. Grady, C.P.L., B. Smets, and D. Barbeau. Variability in kinetic parameter estimates: A review of possible causes and a proposed terminology. Wat. Res. 30 (3), 742–748, 1996.

5. Eaton, A.D., et al. eds., Standard Methods for the Examination of Water and Wastewater, 19th Edition, American Public Health Association, Washington, DC, 1995.

6. Chudoba P., B. Capdeville, and J. Chudoba. Explanation of biological meaning of the So/Xo ratio in batch cultivation. Wat. Sci. Tech. 26 (3/4), 743–751, 1992.

TABLE I

	Compound	H_L @ 25°C (atm/mole frac)	H_L @ 100°C (atm/mole frac)
1	Acetaldehyde	4.87e+00	5.64e+01
3	Acetonitrile	1.11e+00	1.78e+01
4	Acetophenone	5.09e−01	2.25e+01
5	Acrolein	4.57e+00	6.61e+01
8	Acrylonitrile	5.45e+00	6.67e+01
9	Allyl chloride	5.15e+02	2.26e+03
10	Aniline	9.78e−02	1.42e+00
12	Benzene	3.08e+02	1.93e+03
14	Benzyl chloride	1.77e+01	2.88e+02
15	Biphenyl	2.27e+01	1.27e+03
17	Bromoform	2.96e+01	3.98e+02
18	1,3-Butadiene	3.96e+03	1.56e+04
20	Carbon disulfide	1.06e+03	3.60e+03
21	Carbon tetrachloride	1.68e+03	1.69e+04
23	2-Chloroacetophenone	4.84e−02	1.43e+01
24	Chlorobenzene	2.09e+02	3.12e+03
25	Chloroform	2.21e+02	1.34e+03
26	Chloroprene	5.16e+01	1.74e+02
29	o-Cresol	9.12e−02	2.44e+01
31	Cumene	7.28e+02	7.15e+03
32	1,4-Dichlorobenzene(p)	1.76e+02	1.95e+03
33	Dichloroethyl ether	1.14e+00	3.57e+01
34	1,3-Dichloropropene	1.97e+02	1.44e+03
36	N,N-Dimethylaniline	7.70e−01	5.67e+02
37	Diethyl sulfate	3.41e−01	4.22e+01
38	3,3'-Dimethylbenzidine	7.51e−05	5.09e−01
40	1,1-Dimethylhydrazine	9.11e−02	1.57e+01
42	Dimethyl sulfate	2.23e−01	1.43e+01
43	2,4-Dinitrophenol	2.84e−01	1.50e+02
44	2,4-Dinitrotoluene	4.00e−01	9.62e+00
45	1,4-Dioxane	3.08e−01	9.53e+00
47	Epichlorohydrin	1.86e+00	4.34e+01
48	Ethyl acrylate	1.41e+01	3.01e+02
49	Ethylbenzene	4.38e+02	4.27e+03
50	Ethyl chloride (chloroethane)	6.72e+02	3.10e+03
51	Ethylene dibromide	3.61e+01	5.15e+02
52	Ethylene dichloride (1,2-Dichloroethane)	6.54e+01	5.06e+02
54	Ethylene oxide	1.32e+01	9.09e+01
55	Ethylidene dichloride (1,1-Dichloroethane)	3.12e+02	2.92e+03
57	Ethylene glycol dimethyl ether	1.95e+00	4.12e+01
60	Ethylene glycol monoethyl ether acetate	9.86e−02	6.03e+00
62	Ethylene glycol monomethyl ether acetate	1.22e−01	6.93e+00
64	Diethylene glycol dimethyl ether	8.38e−02	4.69e+00
69	Diethylene glycol diethyl ether	1.19e−01	7.71e+00
72	Ethylene glycol monobutyl ether acetate	2.75e−01	2.50e+01
73	Hexachlorobenzene	9.45e+01	2.57e+04
74	Hexachlorobutadiene	5.72e+02	6.92e+03
75	Hexachloroethane	4.64e+02	7.49e+04
76	Hexane	4.27e+04	9.44e+04
78	Isophorone	3.68e−01	1.68e+01
80	Methanol	2.89e−01	7.73e+00
81	Methyl bromide (Bromomethane)	3.81e+02	2.12e+03
82	Methyl chloride (Chloromethane)	4.90e+02	2.84e+03
83	Methyl chloroform (1,1,1-Trichloroethane)	9.67e+02	5.73e+03

TABLE I—Continued

	Compound	H_L @ 25°C (atm/mole frac)	H_L @ 100°C (atm/mole frac)
84	Methyl ethyl ketone (2-Butanone)	7.22e+00	5.92e+01
86	Methyl isobutyl ketone (Hexone)	2.17e+01	3.72e+02
88	Methyl methacrylate	7.83e+00	9.15e+01
89	Methyl tert-butyl ether	3.08e+01	2.67e+02
90	Methylene chloride (Dichloromethane)	1.64e+02	9.15e+02
93	Naphthalene	2.68e+01	7.10e+02
94	Nitrobenzene	1.33e+00	2.80e+01
96	2-Nitropropane	6.61e+00	8.76e+01
99	Phosgene	7.80e+02	3.51e+03
102	Propionaldehyde	3.32e+00	1.42e+02
103	Propylene dichloride	1.59e+02	1.27e+03
104	Propylene oxide	1.98e+01	1.84e+02
106	Styrene	1.45e+02	1.72e+03
107	1,1,2,2-Tetrachloroethane	1.39e+01	1.99e+02
108	Tetrachloroethylene (Perchloroethylene)	9.83e+02	1.84e+04
109	Toluene	3.57e+02	2.10e+03
112	o-Toluidine	1.34e−01	1.15e+01
113	1,2,4-Trichlorobenzene	1.07e+02	1.04e+03
114	1,1,2-Trichloroethane	4.58e+01	5.86e+02
115	Trichloroethylene	5.67e+02	7.66e+03
116	2,4,5-Trichlorophenol	4.84e−01	6.27e+01
117	Triethylamine	6.94e+00	2.57e+02
118	2,2,4-Trimethylpentane	1.85e+05	9.74e+05
119	Vinyl acetate	2.82e+01	2.80e+02
120	Vinyl chloride	1.47e+03	6.45e+03
121	Vinylidene chloride (1,1-Dichloroethylene)	1.44e+03	1.40e+04
123	m-Xylene	4.13e+02	3.25e+03
124	o-Xylene	2.71e+02	2.55e+03
125	p-Xylene	4.13e+02	3.20e+03

BILLING CODE 6560–50–P

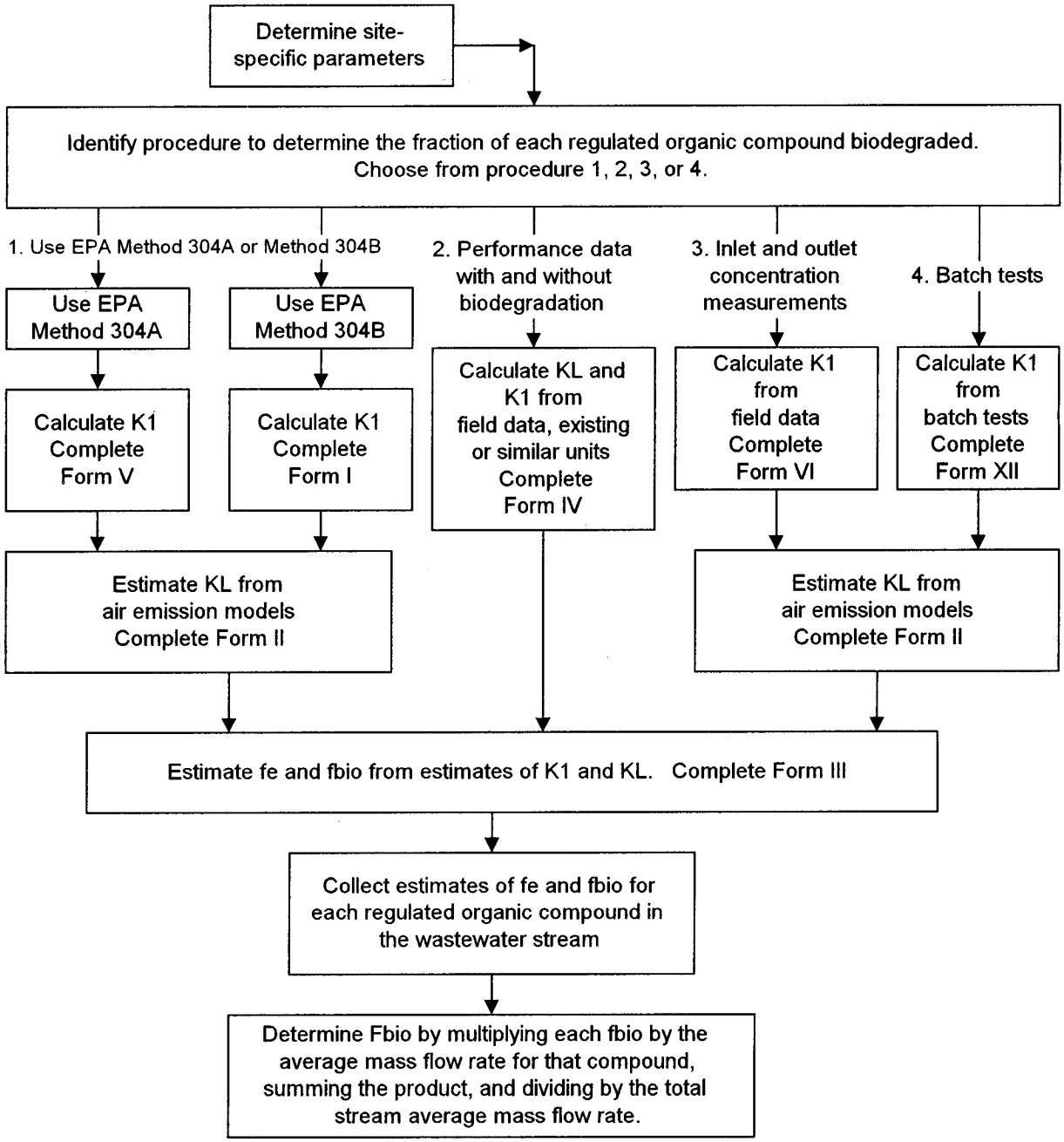

Figure 1. ALTERNATIVE EXPERIMENTAL METHODS FOR DETERMINING THE FRACTION OF ORGANIC COMPOUND BIODEGRADED (Fbio) IN A BIOLOGICAL TREATMENT UNIT

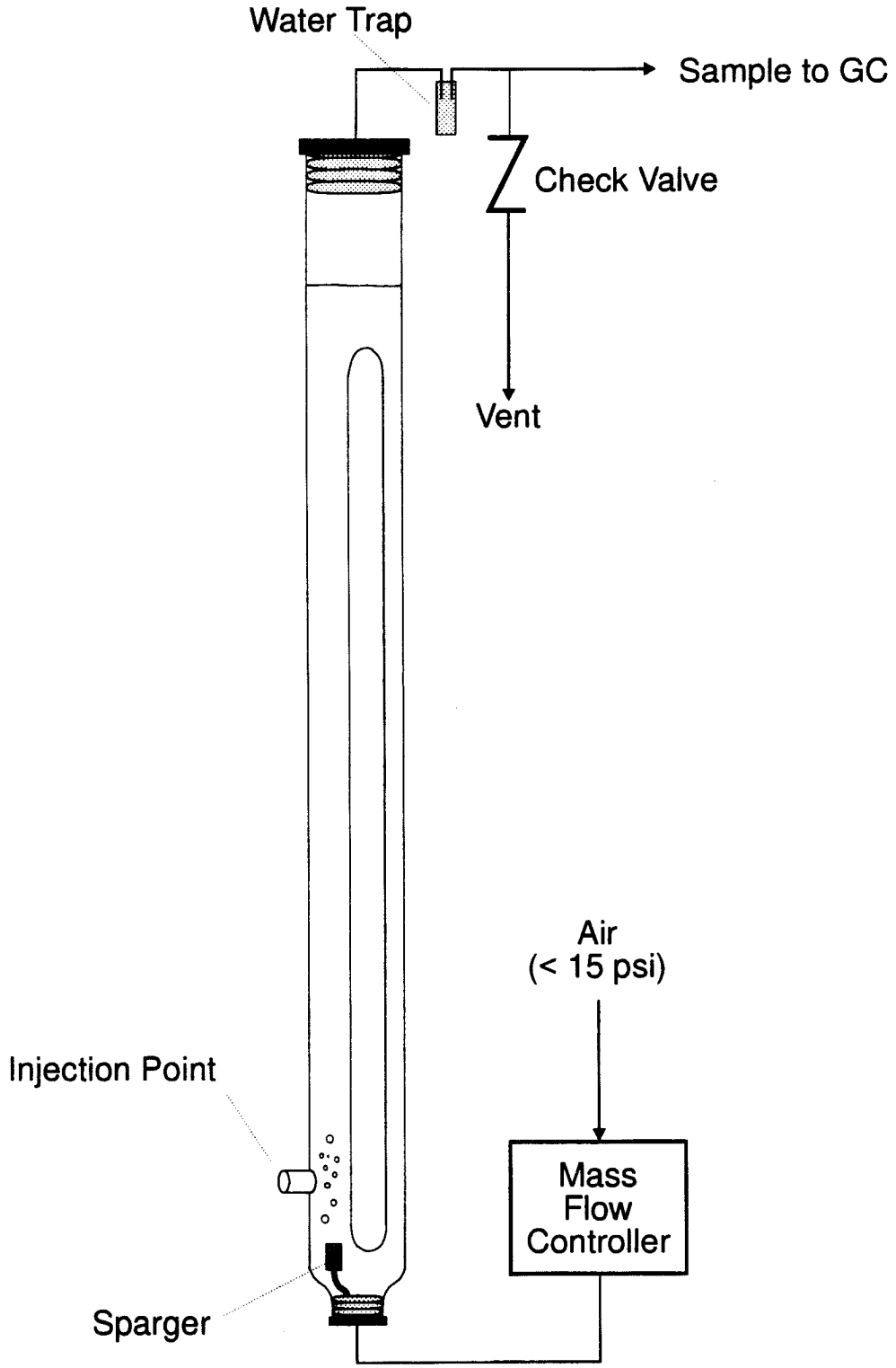

Figure 2. Example Aerated Draft Tube Reactor

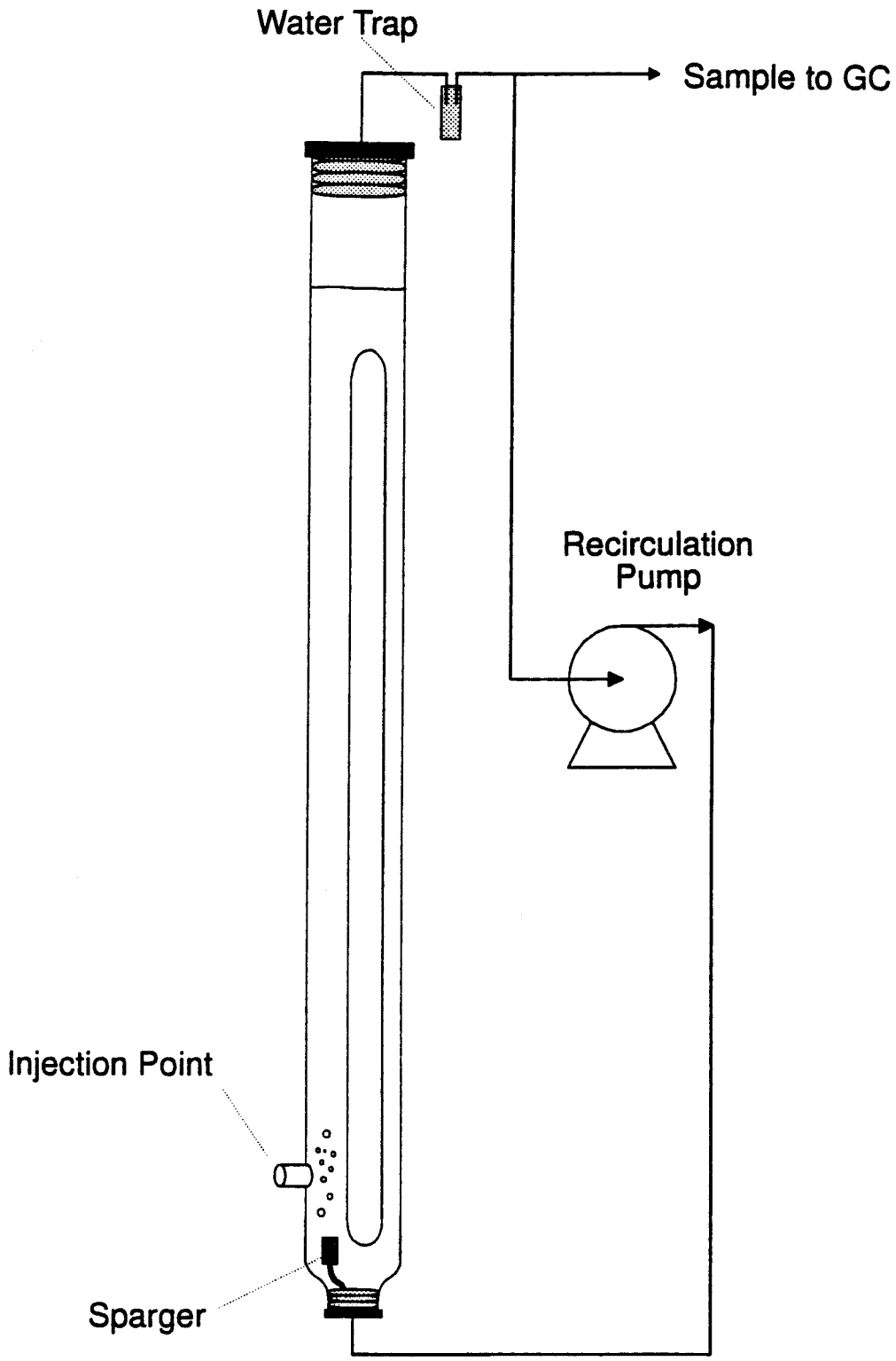

Figure 3. Example Sealed Draft Tube Reactor

Form I

DATA FORM FOR THE ESTIMATION OF THE EPA METHOD 304B FIRST ORDER BIORATE CONSTANT

NAME OF THE FACILITY for site specific biorate determination			Example
COMPOUND for site specific biorate determination			*METHANOL*
INLET CONCENTRATION used in EPA METHOD 304B	1		78
EXIT CONCENTRATION measured by EPA METHOD 304B	2		6
BIOMASS (g/L) This is the dried solids that are obtained from the mixed liquor suspended solids in the bench scale bioreactor.	3		0.075
TEMPERATURE OF BIOREACTOR (deg. C)	4		35
VOLUME of EPA METHOD 304B bench scale bioreactor (L)	5		6
FLOW RATE of waste treated in the bench scale bioreactor (L/hr)	6		0.146
CALCULATIONS FROM EPA METHOD 304B DATA MEASUREMENTS			
RESIDENCE TIME (hr) Divide the number on line 5 by the number on line 6 and enter the results here.	7		41.10
Concentration Decrease (g/m^3). Subtract the number on line 2 from the number on line 1 and enter the results here.	8		72.00
BIORATE (g/m^3-hr). Divide the number on line 8 by the number on line 7 and enter the results here.	9		1.75
Product of concentration and biomass. Multiply the number on line 2 by the number on line 3 and enter the results here.	10		0.45
BIORATE K1 (L/g bio-hr) Divide the number on line 9 by the number on line 10 and enter the results here.	11		3.89
Temperature adjustment. Subtract 25 deg. C from the number on line 4 and enter the results here.	12		10
Temperature adjustment factor. 1.046 is the default temperature adjustment factor. Enter the temperature adjustment factor here.	13		1.046
Biorate temperature ratio. Raise the number on line 13 to the power of the number on line 12.	14		1.567
BIORATE K1 at 25 deg. C (L/g MLVSS-hr) Divide the number on line 11 by the number on line 14 and enter the results here.	15		2.48

Note: With Monod kinetics, use Kmax=1000 to convert the Monod kinetics to first order. If a different temperature adjustment factor than the default is entered on line 13, make sure that the adjustment factor used in the calculations agrees with the value entered on line 13.

Form II

PROCEDURES FORM FOR THE ESTIMATION OF THE KL FROM UNIT SPECIFICATIONS

NAME OF THE FACILITY for site specific biorate determination	
NAME OF UNIT for site specific biorate determination	
NAME OF COMPOUND	
HENRY'S LAW constant for the compound (mole fraction in gas per mole fraction in water at 25 degrees Celsius)	

IDENTIFY THE TYPE OF UNIT (check one box below)

	Quiescent impoundment	1	
	Surface agitated impoundment	2	
	Surface agitated impoundment with submerged air	3	
	Unit agitated by submerged aeration gas	4	
	EPA Method 304A, Covered unit, UNOX system, or bench scale reactor	5	

PROCEDURES BASED UPON THE TYPE OF UNIT

UNIT	PROCEDURE TO FOLLOW
1	Use the quiescent impoundment model to determine KL. Use Kq as KL as determined from Form VII.
2	Use the quiescent impoundment model to determine KL for the quiescent zone, Form VII. Use the aerated impoundment model to determine KL for the agitated surface, Form VIII.
3	Use the quiescent impoundment model to determine Kq for the quiescent zone, Form VII. Use the aerated impoundment model to determine KL for the agitated surface, Form VIII. The total system KL is the sum of the KL from Form VIII and the equivalent KL from Form V. Use the submerged air rate as the vent rate in form V.
4	Use the aerated impoundment model to determine KL if the surface is agitated. Use the quiescent impoundment model if the surface is not agitated. KL includes the effect of volatilization in the air discharge. See section 5.6.1 in AIR EMISSIONS MODELS FOR WASTE AND WASTEWATER (EPA-453/R-94-080A). The total system KL is the sum of the KL from Form VIII and the equivalent KL from Form V. Use the submerged air rate as the vent rate in Form V.
5	KL for the surface is assumed to be equal zero. Determine equivalent KL based upon air discharge. Use Form V for EPA Method 304A or if the concentration in the vent is not measured. Use Form V-A if the concentration in the vent is measured.

Estimate of KL obtained from above procedures (m/s)	6	

Form II-A

PROCEDURES FORM FOR THE ESTIMATION OF THE KL FROM WATER 7

NAME OF THE FACILITY for site specific biorate determination	
NAME OF UNIT for site specific biorate determination	
NAME OF COMPOUND	
HENRY'S LAW COMPOUND	

IDENTIFY THE TYPE OF UNIT (check one box below)

	Quiescent impoundment	1	
	Surface agitated impoundment	2	
	Surface agitated impoundment with submerged air	3	
	Unit agitated by submerged aeration gas	4	
	Covered unit, UNOX system, bench scale reactor	5	

PROCEDURES BASED UPON THE TYPE OF UNIT

unit	procedure to follow
1	Use the quiescent impoundment model to determine KL.
2	Use the aerated impoundment model to determine KL for the combined agitated surfaces and quiescent surfaces.
3	Use the aerated impoundment model to determine KL for the combined agitated surfaces and quiescent surfaces.
4	Use the aerated impoundment model to determine KL if the surface is agitated. Use the quiescent impoundment model if the surface is not agitated. KL includes the effect of volatilization in the air discharge. See section 5.6.1 in AIR EMISSIONS MODELS FOR WASTE AND WASTEWATER (EPA-453/R-94-080A).
5	KL for the surface is assumed to equal zero. Select the covered unit option with the aerated impoundment model.

Form III	DATA FORM FOR THE ESTIMATION OF THE COMPOUND FRACTION BIODEGRADED AND AIR EMISSIONS		
NAME OF THE FACILITY for site specific biorate determination			example
COMPOUND for site specific biorate determination			*methanol*
ESTIMATE OF K1 from Form I line 11, Form V line 15, Form V-A line 15, Form IV line 14, Form VI line 13, or Form XII line 9. (L/g MLVSS-hr)	1		3.89
BIOMASS (g/L) This is the dried solids that are obtained from the mixed liquor suspended solids in the full-scale bioreactor.	2		2.4
VOLUME of full-scale system (cubic meters)	3		2700
AREA of the liquid surface of the full-scale system (square meters)	4		1500
ESTIMATE OF KL from Form II, II-A, IV, V, V-A, or V-B (m/s)	5		0.0000036
FLOW RATE of waste treated in full-scale bioreactor (m^3/s)	6		0.1565
CALCULATIONS FROM ESTIMATES OF K1 AND KL			
BIORATE (m^3/s) Multiply the numbers on lines 1, 2, and 3 together and divide the results by 3600. Enter the results here.	7		7.0020000
AIR STRIPPING (m^3/s). Multiply the numbers on lines 4 and 5 together. Enter the results here.	8		0.0054000
EFFLUENT DISCHARGE (m^3/s). Enter the number on line 6 here.	9		0.1565000
TOTAL of the three loss mechanisms. Add the numbers on lines 7, 8, and 9. Enter the results here.	10		7.1639000
Fraction biodegraded: Divide the number on line 7 by the number on line 10 and enter the results here.	11		0.9774006
Fraction air emissions: Divide the number on line 8 by the number on line 10 and enter the results here.	12		0.0007538
Fraction remaining in unit effluent: Divide the number on line 9 by the number on line 10 and enter the results here.	13		0.0218456
Total: add the numbers on lines 11, 12, and 13. The sum should equal 1.0	14		1.0000000

Form IV **DATA FORM FOR THE ESTIMATION OF K1 AND KL FROM FULL SCALE UNIT DATA WITH AND WITHOUT BIODEGRADATION**			
For a general discussion of this approach, see Air Emissions Models for Waste and Wastewater, EPA-453/R-94-080A, Chapter 5, November 1994.			
NAME OF THE FACILITY for site specific biorate determination			example
COMPOUND for site specific biorate determination			*methanol*
BIOMASS (g/L) This is the dried solids that are obtained from the mixed liquor suspended solids in the full-scale bioreactor.	1		2.4
VOLUME of full-scale system (cubic meters)	2		2700
AREA of the liquid surface of the full-scale system (square meters)	3		1500
INLET CONCENTRATION of compound (g/m^3 or ppmw)	4		133.5
EXIT CONCENTRATION of compound (g/m^3 or ppmw)	5		10.57
EXIT CONCENTRATION (NO BIODEGRADATION) of compound (g/m^3 or ppmw)	6		133
FLOW RATE of waste treated in the full-scale bioreactor (m^3/s)	7		0.1565
ESTIMATES OF K1 AND KL FROM FIELD DATA WITH AND WITHOUT BIODEGRADATION			
REMOVAL WITH BIODEGRADATION (g/s) Subtract the number on line 5 from the number on line 4 and multiply the results by the number on line 7. Enter the results here.	8		19.238545
REMOVAL WITHOUT BIODEGRADATION (g/s) Subtract the number on line 6 from the number on line 4 and multiply the results by the number on line 7. Enter the results here.	9		0.078250
KL A ESTIMATE (m^3/s) Divide the number on line 9 by the number on line 6. Enter the results here.	10		0.000588
K1 B V + KL A ESTIMATE (m^3/s) . Divide the number on line 8 by the number on line 5. Enter the results here.	11		1.820108
K1 B V ESTIMATE (m^3/s) Subtract the number on line 10 from the number on line 11. Enter the results here.	12		1.819520
Product of B and V. Multiply the number on line 1 by the number on line 2 and enter the results here.	13		6480
K1 ESTIMATE (L/gMLVSS-hr) Divide the number on line 12 by the number on line 13 and multiply by 3600 s/hr. Enter the results here.	14		1.010844
KL ESTIMATE (m/s) Divide the number on line 10 by the number on line 3. Enter the results here.	15		0.0000004

Form V	**DATA FORM FOR THE ESTIMATION OF K1 FOR EPA METHOD 304A OR FROM A COVERED, VENTED BIODEGRADATION UNIT.**		
For a general discussion of this approach, see Air Emissions Models for Waste and Wastewater, EPA-453/R-94-080A, Chapter 5, November 1994			
NAME OF THE FACILITY for site specific biorate determination			example
COMPOUND for site specific biorate determination			*methanol*
BIOMASS (g/L) This is the dried solids that are obtained from the mixed liquor suspended solids in the unit.	1		0.075
VENT RATE of total gas leaving the unit (G, m^3/s)	2		1
TEMPERATURE of the liquid in the unit (deg. C)	3		25
INLET CONCENTRATION of compound (g/m^3 or ppmw)	4		100
EXIT CONCENTRATION of compound (g/m^3 or ppmw)	5		5
ESTIMATE OF Henry's law constant (H, g/m^3 in gas / g/m^3 in liquid). Obtained from Form IX	6		0.00021
AREA OF REACTOR (m^2)	7		3400
VOLUME OF REACTOR (m^3)	8		10000
FLOW RATE of waste treated in the unit (m^3/s)	9		0.146
CALCULATION OF THE ESTIMATE OF K1			
TOTAL REMOVAL (g/s) Subtract the number on line 5 from the number on line 4 and multiply the result by the number on line 9. Enter the results here.	10		13.870000
[H G] ESTIMATE (m^3/s) Multiply the number on line 2 by the number on line 6. Enter the results here.	11		0.000021
[K1 B V + H G] (m^3/s) Divide the number on line 10 by the number on line 5. Enter the results here.	12		2.774000
[K1 B V] ESTIMATE (m^3/s) Subtract the number on line 11 from the number on line 12. Enter the results here.	13		2.773979
If the number on line 11 is greater than the number on line 13, this procedure cannot be used to demonstrate that the compound is biodegradable. Do not complete lines 14 and 15.			
Product of B and V. Multiply the number on line 1 by the number on line 8 and enter the results here.	14		750.000000
K1 ESTIMATE (L/g MLVSS-hr) Divide the number on line 13 by the number on line 14 and multiply by 3600 s/hr. Enter the results here.	15		13.315099
EQUIVALENT KL. Divide the number on line 11 by the number on line 7. Enter the results on line 16.	16		6.18e-09

This form may be used to estimate the Equivalent KL with input data for lines 2, 6, and 7.

Form V-A DATA FORM FOR THE CALCULATION OF K1 FROM A COVERED, VENTED BIODEGRADATIN UNIT. THE VENT CONCENTRATION IS MEASURED.			
For a general discussion of this approach, see Air Emissions Models for Waste and Wastewater, EPA-453/R-94-080A, Chapter 5, November 1994.			
NAME OF THE FACILITY for site specific biorate determination			example
COMPOUND for site specific biorate determination			*methanol*
BIOMASS (g/L) This is the dried solids that are obtained from the mixed liquor suspended solids in the unit.	1		0.075
VENT RATE of total gas leaving the unit (G, m^3/s)	2		.1
TEMPERATURE of the liquid in the unit (deg. C)	3		25
INLET CONCENTRATION of compound (Ci, g/m^3 or ppmw)	4		100
EXIT CONCENTRATION of compound (Ce, g/m^3 or ppmw)	5		5
VENT CONCENTRATION of compound (Cv, g/m^3)	6		0.001
AREA OF REACTOR SURFACE (m^2)	7		3400
VOLUME OF REACTOR (m^3)	8		10000
FLOW RATE of waste treated in the unit (m^3/s)	9		0.146
CALCULATION OF THE ESTIMATE OF K1			
TOTAL REMOVAL (g/s) Subtract the number on line 5 from the number on line 4 and multiply the results by the number on line 9. Enter the results here.	10		13.87
[G Cv/Ce] ESTIMATE (m^3/s) Multiply the number on line 2 by the number on line 6 and divide by the number on line 5. Enter the results here.	11		0.000020
[K1 B V + G Cv/Ce] (m^3/s) Divide the number on line 10 by the number on line 5. Enter the results here.	12		2.77
[K1 B V] ESTIMATE (m^3/s) Subtract the number on line 11 from the number on line 12. Enter the results here.	13		2.77
If the number on line 11 is greater than the number on line 13, this procedure cannot be used to demonstrate that the compound is biodegradable. Do not complete lines 14 and 15.			
Product of B and V. Multiply the number on line 1 by the number on line 8 and enter the results here.	14		750.00
K1 ESTIMATE (L/g MLVSS-hr) Divide the number on line 13 by the number on line 14 and multiply by 3600 s/hr. Enter the results here.	15		13.30
EQUIVALENT KL. Divide the number on line 11 by the number on line 7. Enter the results here.	16		5.9e-09

This form may be used to calculate the Equivalent KL with input data for lines 2, 5, 6, and 7.

Form V-B DATA FORM FOR THE CALCULATION OF EQUIVALENT KL FROM A VENTED BIODEGRADATIN UNIT WITH AN AIR SUPPORTED COVER. THE VENT CONCENTRATION IS MEASURED.			
NAME OF THE FACILITY for site specific biorate determination			example
COMPOUND for site specific biorate determination			*methanol*
Vent rate of total gas entering the cover (m^3/s)	1		120
Vent rate of total gas leaving the cover transferred to a control device (m^3/s)	2		100
TEMPERATURE of the liquid in the unit (deg. C)	3		25
Area of air supported cover (m^2)	4		1950
Permeability through the cover (cm/s)	5		5E-6
VENT CONCENTRATION of compound (g/m^3)	6		0.0022
EXIT CONCENTRATION of compound (g/m^3 or ppmw)	7		10.57
AREA OF REACTOR SURFACE (m^2)	8		1500
Performance of vent control device (% control)	9		95
CALCULATION OF THE ESTIMATE OF EQUIVALENT KL			
Loss of forced air in the cover due to leakage. (m^3/s) Subtract the number on line 2 from the number on line 1. Enter the results here.	10		20
Loss of compound in forced air (g/s) Multiply the number on line 10 by the number on line 6. Enter the results here.	11		0.044
Loss of compound by permeation through cover (g/s). Line 4 times line 5, line 6, and divide by 100. Enter the results here.	12		0
Loss of compound by permeation through vent (g/s). Line 2 times line 6. Enter the results here.	13		0.22
Treatment of compound in control device (g/s). Line 13 times line 9, divided by 100. Enter the results here.	14		0.209
Total removal from air phase (g/s). Sum of 11, 12, and 13.	15		0.264
Total treatment effectiveness (%) Line 14 divided by 15 times 100.	16		79.1666
[G Cv/Ce] ESTIMATE (m^3/s) Divide line 15 by line 7.	17		0.025
EQUIVALENT KL. Divide the number on line 17 by line 8.	18		1.67e-05

The permeability is the ratio of the flux (g/cm^2) to the gas concentration (g/cm^3).

If the gas is generated by the unit, the gas entering the cover may be estimated from an estimate of the cover leak rate and the total gas transferred to the control device.

Form VI	**DATA FORM FOR THE ESTIMATION OF K1 FROM FULL SCALE UNIT DATA WITH BIODEGRADATION**		
NAME OF THE FACILITY for site specific biorate determination			example
COMPOUND for site specific biorate determination			*methanol*
BIOMASS (g/L) This is the dried solids that are obtained from the mixed liquor suspended solids in the full-scale bioreactor.	1		0.075
VOLUME of full-scale system (cubic meters)	2		100000
AREA of the liquid surface of the full-scale system (square meters)	3		10000
INLET CONCENTRATION of compound (g/m^3 or ppmw)	4		100
EXIT CONCENTRATION of compound (g/m^3 or ppmw)	5		5
ESTIMATE OF KL from Form II (m/s)	6		0.00001
FLOW RATE of waste treated in the full-scale bioreactor (m^3/s)	7		0.146
CALCULATION OF THE ESTIMATE OF K1 FROM FIELD DATA			
REMOVAL WITH BIODEGRADATION (g/s) Subtract the number on line 5 from the number on line 4 and multiply the results by the number on line 7. Enter the results here.	8		13.87
[KL A] ESTIMATE (m^3/s) Multiply the number on line 3 by the number on line 6. Enter the results here.	9		0.10
[K1 B V + KL A] (m^3/s) Divide the number on line 8 by the number on line 5. Enter the results here.	10		2.774
[K1 B V] ESTIMATE (m^3/s) Subtract the number on line 9 from the number on line 10. Enter the results here.	11		2.674
Product of B and V. Multiply the number on line 1 by the number on line 2 and enter the results here.	12		7500
K1 ESTIMATE (L/g MLVSS-hr) Divide the number on line 11 by the number on line 12 and multiply by 3600 s/hr. Enter the results here.	13		1.28352

FORM VII

DATA FORM FOR CALCULATING THE
MASS TRANSFER COEFFICIENT FOR A QUIESCENT SURFACE IMPOUNDMENT

Facility Name: _____

Waste Stream Compound: _____

Enter the following:

F - Impoundment fetch (m) _____
D - Impoundment depth (m) _____
U_{10} - Windspeed 10 m above liquid surface (m/s) _____
D_w - Diffusivity of compound in water (cm^2/s) _____
D_{ether} - Diffusivity of ether in water (cm^2/s) _____
μ_G - Viscosity of air, (g/cm-s) _____
ρ_G - Density of air, (g/cm^3) _____
D_a - Diffusivity of compound in air, (cm^2/s) _____
A - Area of impoundment, (m^2) _____
H - Henry's law constant, ($atm\text{-}m^3/g$ mol) _____
R - Universal gas constant, ($atm\text{-}m^3/g$ mol. °K) _____
μ_L - Viscosity of water, (g/cm-s) _____
ρ_L - Density of liquid, (g/cm^3) _____
T - Impoundment temperature, (°C) _____

Calculate the following:

Calculate F/D: _____

A. Calculate the liquid phase mass transfer coefficient, k_L, using one of the following procedures, (m/s)

1. Where F/D < 14 and U_{10} > 3.25 m/s, use the following procedure from MacKay and Yeun:

Calculate the Schmidt number on the liquid side, Sc_L, as follows:
$Sc_L = \mu_L/\rho_L D_w$ _____

Calculate the friction velocity, U^*, as follows, (m/s):
$U^* = 0.01 \times U_{10}(6.1 + 0.63\ U_{10})^{0.5}$ _____

Where U^* is > 0.3, calculate k_L as follows:
$k_L = (1.0 \times 10^{-6}) + (34.1 \times 10^{-4})U^* \times Sc_L^{-0.5}$ _____

Where U^* is < 0.3, calculate k_L as follows:
$k_L = (1.0 \times 10^{-6}) + (144 \times 10^{-4})(U^*)^{2.2} \times Sc_L^{-0.5}$ _____

2. For all other values of F/D and U_{10}, calculate k_L using the following procedure from Springer:[1]

[1]Springer, C., P. D. Lunney, and K. T. Valsaraj. Emission of Hazardous Chemicals from Surface and Near Surface Impoundments to Air. U.S. Environmental Protection Agency, Solid and Hazardous Waste Research Division. Cincinnati, OH. Project Number 808161-02. December 1984.

Where U_{10} is < 3.25 m/s, calculate k_L as follows:
$k_L = 2.78 \times 10^{-6}(D_w/D_{ether})^{2/3}$ _____

Where U_{10} is > 3.25 and 14 < F/D < 51.2, Calculate k_L as follows:
$k_L = [2.605 \times 10^{-9}(F/D) + 1.277 \times 10^{-7}]\ U_{10}^2\ (D_w/D_{ether})^{2/3}$ _____

Where U_{10} > 3.25 m/s and F/D > 51.2, calculate k_L as follows:
$k_L = (2.611 \times 10^{-7})U_{10}^2\ (D_w/D_{ether})^{2/3}$ _____

B. Calculate the gas phase mass transfer coefficient, k_G, using the following procedure from MacKay and Matsasugu, (m/s):[2]

Calculate the Schmidt number on the gas side, Sc_G, as follows: $Sc_G = \mu_G/\rho_G D_a$ _____

Calculate the effective diameter of the impoundment, d_e, as follows, (m):
$d_e = (4A/\pi)^{0.5}$ _____

Calculate k_G as follows, (m/s): $k_G = 4.82 \times 10^{-3}\ U_{10}^{0.78}\ Sc_G^{-0.67}\ d_e^{-0.11}$ _____

C. Calculate the partition coefficient, Keq, as follows: Keq = H/[R(T+273)]

_____

D. Calculate the overall mass transfer coefficient, K_q, as follows, (m/s):
$1/K_q = 1/k_L + 1/Keq\text{-}k_G$ _____

Where the total impoundment surface is quiescent:
$KL = K_q$

Where a portion of the impoundment surface is turbulent, continue with Form VIII.

---

[2]Hwang, S. T. Toxic Emissions from Land Disposal Facilities. Environmental Progress. 1:46-52. February 1982.

FORM VIII

DATA FORM FOR CALCULATING THE
MASS TRANSFER COEFFICIENT FOR AN AERATED SURFACE IMPOUNDMENT

Facility Name: _____

Waste Stream Compound: _____

Enter the following:

J - Oxygen transfer rating of surface aerator, (lb O_2/hr-hp) _____
POWR - Total power to aerators, (hp) _____
T - Water temperature, (°C) _____
O_t - Oxygen transfer correction factor _____
MW_L - Molecular weight of liquid _____
A_t - Turbulent surface area of impoundment, (ft^2) _____
(If unknown, use values from Table 1)
A - Total surface area of impoundment, (ft^2) _____
ρ_L - Density of liquid, (lb/ft^3) _____
D_w - Diffusivity of constituent in water, (cm^2/s) _____
$D_{O_2,w}$ - Diffusivity of oxygen in water, (cm^2/s) _____

d - Impeller diameter, (cm) _____
w - Rotational speed of impeller, (rad/s) _____
ρ_a - Density of air, (gm/cm^3) _____
N - Number of aerators _____
g_c - Gravitation constant, (lb_m-$ft/s^2/lb_f$) _____
d^* - Impeller diameter, (ft) _____
D_a - Diffusivity of constituent in air, (cm^2/s) _____
MW_a - Molecular weight of air _____
R - Universal gas constant, (atm-m^3/g mol.°C) _____
H = Henry's law constant, (atm-m^3/g mol) _____

Calculate the following:

A. Calculate the liquid phase mass transfer coefficient, k_L, using the following Equation from Thibodeaux:[3],[4]

$$k_L = [8.22 \times 10^{-9}\, J\, (POWR)(1.024)^{T-20}\, O_t\, 10^6\, MW_L/(Va_v\rho_L)]\, (D_w/\ D_{O_2,w}\ )^{0.5}, \text{(m/s)}$$

_____

[3]GCA Corporation. Emissions Data and Model Review for Wastewater Treatment Operations. Draft Technical Note. Prepared for U.S. Environmental Protection Agency. Contract No. 68-01-6871, Assignment 49. August 1985. p. 4-2.

[4]Hwang, S. T. Toxic Emissions from Land Disposal Facilities. Environmental Progress. 1:46-52. February 1982.

B. Calculate the gas phase mass transfer coefficient, k_G, using the following procedure from Reinhardt:[5,6]

Calculate the viscosity of air, μ_a, as follows, (g/cm.s):
$\mu_a = 4.568 \times 10^{-7}\ T + 1.7209 \times 10^{-4}$ _____

Calculate the Reynold's number as follows:
$R_e = d^2 w \rho_a / \mu_a$ _____

Calculate power to impeller, P_I, as follows, ($ft.lb_f/s$):
$P_I = 0.85\ (POWR)\ 550/N$ _____

Calculate the power number, p, as follows:
$p = P_I\ g_c/(\rho_L d^{*5}\ w^3)$ _____

Calculate the Schmidt number, Sc_G, as follows:
$Sc_G = \mu_a/\rho_a D_a$ _____

Calculate the Fronde number, F_r, as follows:
$F_r = d^* w^2/g_c$ _____

Calculate k_G as follows:
$k_G = 1.35 \times 10^{-7}\ R_e^{1.42}\ p^{0.4}\ Sc_G^{0.5}\ F_r^{-0.21}\ D_a MW_a/d$, (m/s) _____

C. Calculate the partition coefficient, Keq, as follows:
$Keq = H/[R(T+273)]$ _____

D. Calculate the overall turbulent mass transfer coefficient, K_t, as follows, (m/s):
$1/K_t = 1/k_L + 1/Keq.k_G$ _____

E. Calculate the quiescent mass transfer coefficient, K_q, for the impoundment using Form VII.

_____

F. Calculate the overall mass transfer coefficient, KL, for the impoundment as follows:

$$KL = \frac{K_q(A-A_t) + K_t A_t}{A}$$ _____

---

[5]GCA Corporation. Emissions Data and Model Review for Wastewater Treatment Operations. Draft Technical Note. Prepared for U.S. Environmental Protection Agency. Contract No. 68-01-6871, Assignment 49. August 1985. p. 4-3.

[6]Reinhardt, J. R. Gas-Side Mass-Transfer Coefficient and Interfacial Phenomena of Flat-Bladed Surface Agitators. Ph.D. dissertation, University of Arkansas, Fayetteville, Ar. 1977. p. 48.

Table 1. Turbulent Areas and Volumes for Surface Agitators[a]

ω, Motor horsepower, hp	A_t, Turbulent area,		Effective depth, ft	V, Agitated volume, ft^3	a_V, Area per volume ft^2/ft^3
	ft^2	m^2			
5	177	16.4	10	1,767	0.100
7.5	201	18.7	10	2,010	0.100
10	227	21	10.5	2,383	0.0952
15	284	26.4	11	3,119	0.0909
20	346	32.1	11.5	3,983	0.0870
25	415	38.6	12	4,986	0.0833
30	491	45.7	12	5,890	0.0833
40	661	61.4	13	8,587	0.0769
50	855	79.5	14	11,970	0.0714
60	1,075	100	15	16,130	0.0666
75	1,452	135	16	23,240	0.0625
100	2,206	205	18	39,710	0.0555

[a]Data for a high speed (1,200) rpm) aerator with 60 cm propeller diameter (d).

Form IX DATA FORM FOR THE ESTIMATION OF THE HENRY'S LAW CONSTANT FOR A COMPOUND IN THE BIOLOGICAL TREATMENT UNIT			
NAME OF THE FACILITY for site specific biorate determination			example
COMPOUND for site specific biorate determination			*methanol*
LISTED HENRY'S LAW VALUE AT 25 degrees Celsius. (Table 1, ratio of mol fraction in gas to mole fraction in water)	1		.2885
TEMPERATURE of the liquid in the unit (deg.C)	2		25
CALCULATION OF K			
Temperature adjusted Henry's law value (equals the value on line 1 if the temperature on line 2 is 25)	3		0.2885
Discuss basis of temperature adjustment			
Temperature in degrees Kelvin. Add 273.16 to the number on line 2. Enter the results here.	4		298.1600
Temperature ratio. Divide 273.16 by the number on line 4. Enter the results here.	5		0.9162
Henry's Law adjustment factor. Multiply the number on line 5 by 0.804 and enter the results here.	6		0.7366
Henry's Law value (g/m3 gas per g/m3 liquid) Multiply the number on line 3 by the number on line 6 and divide the results by 1000. Enter the results here and on Form V line 6.	7		0.000213
Henry's Law value (atm m3 per mol) Divide the number on line 3 by 55555 and enter the results here.	8		0.000005

Form X **DATA FORM FOR THE CALCULATION OF THE HENRY'S LAW CONSTANT FOR A COMPOUND IN A SEALED BATCH TEST**

NAME OF THE FACILITY for site specific biorate determination			example
COMPOUND for site specific biorate determination			*methanol*
REACTOR HEADSPACE VOLUME, (L)	1		1
REACTOR LIQUID VOLUME (L)	2		10
TEMPERATURE of the liquid in the unit (deg.C)	3		25

Wastewater compounds are biodegraded by biomass in a sealed batch test. For the compound listed above, a data set of liquid and gas concentrations is measured at four different times during the sealed batch test. The data are entered below, and the ratio of the concentrations for each data set is entered in column E.

A	B	C	D	E	
Data set	Time (hr)	Liquid Conc. (mg/L)	Gas Conc. (mg/L)	K_{eq} D/C	.0002108
1					
2					
3					
4					

Temperature in degrees Kelvin. Add 273.16 to the number on line 3. Enter the results here	4		298.16
Molar ratio. Multiply the number on line 4 by 4.555. Enter the results on line 5.	5		1,358.12
Henry's law value (mg/L gas per mg/L liquid). Enter the average value in column E above on line 6.	6		0.000211
Henry's law value (mole fraction gas per mole fraction liquid) Multiply the number on line 6 by the number on line 5. Enter the results on line 7.	7		0.286563
Expected Henry's law value. Enter the number from Form IX line 3.	8		0.288500

Precision: Discuss any variability of the numbers in column E.
Accuracy: Discuss any difference between the numbers on line 7 and line 8. Identify which value will be used for evaluating the biodegradation rate data. Divide the Henry's law value by the number on line 5 and enter the results on line 9.

K_{eq} value (mg/L gas per mg/L liquid)	9		0.000211
HEADSPACE CORRECTION FACTOR. Divide the number on line 2 by the sum of the number on line 2 and the product of the numbers on line 9 and line 1. Enter the result on line 10.	10		0.999979

The headspace correction factor should equal approximately 1 if the headspace is relatively small. Reducing the headspace volume may improve the test data quality if the headspace correction factor is substantially less than one.

Form XI

DATA FORM FOR THE CALCULATION OF THE HENRY'S LAW CONSTANT AND THE STRIPPING CONSTANT FOR A COMPOUND IN AN AERATED BATCH TEST

NAME OF THE FACILITY for site specific biorate determination			example
COMPOUND for site specific biorate determination			*methanol*
Concentration basis (liquid or gas)			gas
TEMPERATURE of the liquid in the unit (deg.C)	1		25
GAS FLOW RATE (L/hr)	2		1
LIQUID VOLUME (L)	3		10
Co concentration measurement at time=0 (mg/L)	4		

A	B	C	D	E
data point	time (hr)	Concentration, C (mg/L)	C/Co	-ln(C/Co)
1				
2				
3				
4				
5				

CALCULATIONS. Use additional lines as needed in an expansion of the above table. Plot the values in column E (y axis) vs the data in column B (x axis). Reject outliers. Curve fit with a straight line. Calculate the slope and enter the slope on line 7. Attach the plot and table to this form.

Temperature in degrees Kelvin. Add 273.16 to the number on line 1. Enter the results here	5		298.16
MOLAR RATIO. Multiply the number on line 5 by 4.555. Enter the results on line 6.	6		1,358.12
Slope of the plot of -ln(C/Co) vs time (per hour)	7		2.10e-05
Calculated K_{eq} value (mg/L gas per mg/L liquid). Divide the number on line 7 by the number on line 2 and multiply the results by the number on line 3. Enter the results on line 8.	8		0.000210
Expected K_{eq} value. Divide the number from Form IX line 3 by the number on line 6 and enter the results on line 9.	9		0.000212

Discuss any differences between the numbers on line 8 and line 9. Identify which value will be used for the evaluation of the stripping constant (line 10). Problems can sometimes be resolved by system redesign, changing the bubble size, or confirming the experimental value of K_{eq} by using Form X.

K_{eq} value (mg/L gas per mg/L liquid)	10		0.000210
STRIPPING CONSTANT(per hour). Divide the number on line 10 by number on line 3 and multiply by the number on line 2. Enter the final result on line 11.	11		0.000021

The headspace correction factor equals one for an aerated batch test.

Form XII **DATA FORM FOR THE CALCULATION OF BATCH RATES AND THE DETERMINATION OF THE MONOD CONSTANTS**

Complete this table with measured liquid concentrations from the batch test. If headspace concentrations were measured and equilibrium has been verified, convert them to liquid concentrations by using K_{eq}. If the data are scattered, plot the concentration vs. time data, and fit the data with a curve based on Equation Appendix C-4 for the Aerated Batch test or Equation Appendix C-6 for the Sealed Batch test. Complete this form with concentrations obtained from that fitted curve. If the curve fitting approach is used, attach a plot of the data and the associated fitted curve to this form. Note: If the initial results appear to be anomalous, do not use the initial results.

COMPOUND for site specific biorate determination			Methanol
Stripping rate constant (/hr) Form XI, line 11	1		2.1e-5
Enter the batch test Biomass concentration (g/L) on line 2.	2		.258
Headspace correction factor. For a Sealed Batch test use Form X line 10 or 1.00 for an Aerated Batch test.	3		0.999979

A	B	C	D	E	F	G
concentration S (mg/L)	time (hr)	Rate for interval (mg/L-hr) $(a_i-a_{i-1})/(b_{i+1}-b_i)$	Log Mean S for interval (mg/L) $(a_i-a_{i-1})/\ln(a_i/a_{i+1})$	Ratio of rate to S (/hr) (C/D)	Adjusted rate (/hr) (E-line 1)	Reciprocal of adj. rate (hr) (1/F)
1.						
2.						
3.						
4.						
5.						
6.						
7.						
8.						
9.						

Continue table on attached sheet as needed. Plot values in column G on y axis, values in column D on x axis. Extrapolate the trend of data points to the y intercept (S=0). Attach the plot to the form.

Slope of line near intercept (hr-L/mg)	4		.4845
Y intercept from plot (hr)	5		1.938
First order rate constant K1 (or Qm/Ks, L/g-hr). The number 1.00 divided by the products of the values on line 5, line 2, and line 3.	6		2.000026
Zero order rate constant (Qm, /hr). The number 1.00 divided by the products of the values on line 4, line 2, and line 3.	7		8.000104
Concentration applicable to full-scale unit. Enter on line 8.	8		5
Effective biorate K1 ESTIMATE (L/g MLVSS-hr)*	9		0.9606

*Match the concentration on line 8 to the values in Column D and look up the equivalent rate in Column F. Divide the result with both the biomass concentration (line 2) and the headspace correction factor (line 3). Enter this value on line 9. Do not use this method to estimate K1 for line 9 if the data quality is poor in Column F. The number on line 9 is multiplied by the biomass and the system concentration to estimate the full scale biorate. Alternatively, the Monod model parameters may be used.

[FR Doc. 97–143 Filed 1–16–97; 8:45 am]
BILLING CODE 6560–50–P