appointment to the ACRS. The purpose of this meeting is to gather information, analyze relevant issues and facts, and to formulate proposed positions and actions, as appropriate, for deliberation by the full Committee.

Oral statements may be presented by members of the public with the concurrence of the Subcommittee Chairman; written statements will be accepted and made available to the Committee. Electronic recordings will be permitted only during those portions of the meeting that are open to the public, and questions may be asked only by members of the Subcommittee, its consultants, and staff. Persons desiring to make oral statements should notify the cognizant ACRS staff person named below five days prior to the meeting, if possible, so that appropriate arrangements can be made.

Further information regarding topics to be discussed, the scheduling of sessions open to the public, whether the meeting has been cancelled or rescheduled, the Chairman's ruling on requests for the opportunity to present oral statements, and the time allotted therefor can be obtained by contacting the cognizant ACRS staff person, Dr. John T. Larkins (telephone: 301/415–7360) between 7:30 a.m. and 4:15 p.m. (EST). Persons planning to attend this meeting are urged to contact the above named individual one or two working days prior to the meeting to be advised of any changes in schedule, etc., that may have occurred.

Date: March 13, 1997.

**Noel F. Dudley,**

*Acting Chief, Nuclear Reactors Branch.*

[FR Doc. 97–6880 Filed 3–18–97; 8:45 am]

**BILLING CODE 7590–01–P**

## Disposition of Cesium-137 Contaminated Emission Control Dust and Other Incident-Related Material; Final Staff Technical Position

**AGENCY:** U.S. Nuclear Regulatory Commission.

**ACTION:** Notice: final staff technical position.

**SUMMARY:** The U.S. Nuclear Regulatory Commission is issuing guidance, in the form of a technical position, that may be used, in case-by-case requests, by appropriate licensees, to dispose of a specific incident-related mixed waste. Mixed waste is a waste that not only is radioactive, but also is classified as hazardous under the Resource Conservation and Recovery Act (RCRA). The specific mixed waste addressed in this position is emission control dust from electric arc furnaces (EAFs) or foundries that has been contaminated with cesium-137 ($^{137}$Cs). The contamination results from the inadvertent melting of a $^{137}$Cs source that: (1) Has been improperly disposed of by an NRC or Agreement State licensee; (2) has been commingled with the steel scrap supply; (3) has not been detected as it progresses to the steel-producing process; and (4) is volatilized in the production process and thereby can and has contaminated large volumes of emission control dust and the emission control systems at steel-producing facilities.

The position, which has been coordinated with the U.S. Environmental Protection Agency (EPA), provides the possibility of a public health-protective, environmentally sound, and cost-effective alternative for the disposal of a large part of this mixed waste, much of which contains $^{137}$Cs in concentrations similar to values that frequently occur in the environment. The position provides the bases that, with the approval of appropriate regulatory authorities (e.g., State-permitting agencies) and others (e.g., disposal site operators), and with possible public input, could be used to allow disposal of stabilized waste at Subtitle C, RCRA-permitted, hazardous waste disposal facilities. NRC believes that disposal, under the provisions of the position or other acceptable alternatives, is preferable to allowing this mixed waste to remain indefinitely at steel company sites.

The position has been developed through an open public process in which working draft documents have been routinely shared with EPA, and also placed in NRC's Public Document Room to allow interested party access. NRC published the proposed position in the **Federal Register** for comment (61 FR 1608, dated January 22, 1996). NRC is now publishing the entire final position, together with its responses to the comments received.

**FOR FURTHER INFORMATION CONTACT:** Dominick A. Orlando, Division of Waste Management, Office of Nuclear Material Safety and Safeguards, Mail Stop TWFN 8F–37, U.S. Nuclear Regulatory Commission, Washington, DC 20555, Telephone (301) 415–6749.

**SUPPLEMENTARY INFORMATION:**

### Disposition of Cesium-137 Contaminated Emission Control Dust and Other Incident-Related Materials; Branch Technical Position

#### *A. Introduction*

Emission control (baghouse) dust and other incident-related materials (e.g., clean-up materials or recycle process streams) contaminated with $^{137}$Cs [1] are currently being stored as mixed radioactive and hazardous waste at several steel company sites across the country. At any single site, this material typically contains a total $^{137}$Cs quantity ranging downward from a little more than 1 curie (Ci) or 37 gigabecquerels (GBq) of activity, distributed within several hundred to a few thousand tons of iron/zinc-rich dust, as well as within much smaller quantities of clean-up or dust-recycle, process-stream materials. In current situations, most, but not all, of this material would be classified as mixed waste and this technical position is intended as a potential disposition alternative for this incident-related material.[2]

Typically, the radioactivity is not evenly distributed among the incident-related materials. Rather, a small fraction (e.g., one-tenth) of the material contains most (e.g., 95 percent) of the radioactivity. Most of the material contains a small quantity of radioactivity at low concentrations and makes up most of the mixed waste, incident-related material volume. This material is classified as hazardous waste under RCRA because it contains lead, cadmium, and chromium which are common to the recycle metal supply. The $^{137}$Cs contamination of this hazardous waste results from a series of three principal events: (1) The loss of control of a radioactive source by an NRC or an Agreement State licensee; (2) the inclusion of the source within the recycle metal scrap supply used by the steel producers; and (3) the inability to screen out the radioactive source as it progresses along the typical scrap collection-to-melt pathway (including radiation detectors used at most furnaces, foundries and many ferrous metal recycling facilities). Consequently, irrespective of the quantity or concentration of the radioactivity, most of the current material is subject to joint regulation as mixed waste under RCRA and the Atomic Energy Act of 1954, as amended, or the equivalent law of an Agreement State.

[1] The byproduct material $^{137}$Cs does not include the $^{137}$ Cs, from global fallout, that exists in the environment from the testing of nuclear explosive devices (see Footnote 3).

[2] The term, ''incident-related material,'' is frequently used in this position to refer to the total spectrum of $^{137}$Cs-contaminated materials resulting from an inadvertent melting event. Because of its widespread use in radioactive devices and its volatility when subjected to steel melting temperatures, the position is directed solely at incident-related materials involving this radioisotope.

The disposal options for these materials, specifically the large volumes of material with the lower concentrations of $^{137}$Cs, have been limited because of their ''mixed-waste'' classification and the costs associated with the disposition of large volumes of mixed or radioactive waste. Long-term solutions addressing the control and accountability of licensed radioactive sources are being considered by NRC and Agreement States. Solutions addressing the disposition of mixed wastes are being considered by various Federal and State regulatory authorities and the U.S. Department of Energy. Nevertheless, the Commission believes that, pending decisions on improved licensee accountability and the ultimate disposition of mixed waste, appropriate disposal of the existing incident-related, mixed-waste material is preferable to indefinite onsite storage.

As a result, this technical position defines the bases that the NRC staff would find acceptable for: (1) Authorizing a licensee, possessing $^{137}$Cs-contaminated emission control dust and other incident-related materials (e.g., the steel company or its service contractor), to transfer treated $^{137}$Cs-contaminated material, below levels specified in this position, to a Subtitle C, RCRA-permitted hazardous waste disposal facility; and (2) not licensing the possession and disposal of these incident-related materials by the RCRA-permitted disposal facility. The position does *not* address disposal at a Subtitle D facility. Because of its radioactivity (i.e., $^{137}$Cs concentration levels), some of the incident-related material may not be suitable for disposal at a Subtitle C, RCRA-permitted disposal facility. This material may be disposed of either: (a) at a licensed low-level radioactive waste disposal facility after appropriate treatment of its hazardous constituents; or (b) at a mixed-waste disposal facility, if applicable acceptance criteria are met.

The regulatory basis for the action is found at 10 CFR 20.2001(a)(1) and 20.2002. The first paragraph authorizes a licensee to dispose of licensed material as provided in the regulations in 10 CFR Parts 30, 40, 60, 61, 70, or 72. Paragraph 30.41(b) states the conditions under which licensees are allowed to transfer byproduct material. Paragraph 30.41(b)(7) of Part 30 specifically provides that licensees may transfer byproduct material if authorized by the Commission, in writing. In the case of the $^{137}$Cs-contaminated material, the licensing action under 10 CFR 20.2002 would constitute the written authorization required by paragraph 30.41(b)(7).

It should be noted that additional acceptance requirements, beyond those covered in this NRC position for disposal of $^{137}$Cs-contaminated incident-related waste at a Subtitle C RCRA-permitted disposal facility, may be established by: (1) An Agreement State; (2) the permit conditions or policies of the RCRA-permitted disposal facility; (3) the regulatory requirements of the RCRA disposal facility's permitting agency; or (4) other authorized parties, including State and local governments. These requirements may be more stringent than those covered in the guidance described in this technical position. The licensed entity transferring the $^{137}$Cs-contaminated incident-related materials must consult with these parties, and obtain all necessary approvals, in addition to those of NRC and/or appropriate Agreement States, for the transfers defined in this technical position. Nothing in this position shall be or is intended to be construed as a waiver of any RCRA permit condition or term, of any State or local statute or regulation, or of any Federal RCRA regulation. The position applies to both hazardous and non-hazardous incident-related waste as specifically defined. In addition, the conditions established in this position pertain to NRC staff and licensee actions. Therefore, in those instances where an Agreement State is the sole regulatory authority for the radioactive material, the Agreement State has the option of using this guidance in reviewing requests for the disposal of the material.

*B. Discussion*

Over the past decade, there has been an increasing number of instances in which radioactive material has been inadvertently commingled with scrap metal that subsequently has entered the steel-recycle production process. If this radioactive material is not removed before the melting process, it could contaminate the finished metal product, associated dust-recycle process streams, equipment (principally air effluent treatment systems), and the dust generated during the process. Some of the contaminant radioactivity is a result of naturally occurring radionuclides that are deposited in oil and gas transmission piping. Other radioactivity may be associated with radioactive sources that are contained in industrial or medical devices. In this latter case, the commingling of the radioactive source with metal destined for recycling can occur if the regulatorily required accountability of these sources fails and a radioactive source is included within the metal scrap supply used by the steel producers. In cases where the radionuclide is naturally occurring, or is already present in the environment as a result of global fallout, the inadvertent melting of a radioactive source could increase the contaminant concentration above that caused by these background environmental levels.[3]

Although many of the steel producers have installed equipment to detect incoming radioactivity, this equipment cannot provide absolute protection because of the shielding of radioactive emissions that may be provided by uncontaminated scrap metal or the shielded ''pig'' that contains the radioactive source. Of special concern, because of the nature and magnitude of the involved radioactivity, are NRC- or Agreement State-licensed sources containing $^{137}$Cs.

When $^{137}$Cs sources are inadvertently melted with a load of scrap metal, a significant amount of the $^{137}$Cs activity contaminates the metal-rich dust that is collected in the highly efficient emission control systems that steel mills have installed to comply with air pollution regulations. Because of hazardous constituents—specifically lead, cadmium, and chromium—EAF emission control dust is a listed waste, KO61, which is subject to regulation under RCRA. If this dust becomes contaminated with $^{137}$Cs, the resulting material is classified as a mixed waste. Emission control dust, generated immediately after the melting of a $^{137}$Cs source with the scrap metal, can contain cesium concentrations in the range of hundreds or thousands of picocuries per gram (pCi/g) or a few to a few tens of becquerels (Bq) per gram of dust, above typical levels in dust caused by $^{137}$Cs in the environment (e.g., 2 pCi/g or 0.074 Bq/g). Several thousand cubic feet (several tens of cubic meters) of dust could be contaminated at these levels. Dust generated days or weeks after a melt of a source (containing hundreds of millicuries or a few curies of $^{137}$Cs (~37 GBq)) will contain reduced concentrations, typically less than 100 pCi/g (3.7 Bq/g).

Even after extensive decontamination and remediation activities, newly generated dust may still contain concentrations greater than 2 pCi/g (0.074 Bq/g) background levels, but generally less than 10 pCi/g (0.37 Bq/g). When the melting of a source is not immediately detected, materials related

[3] In a letter to William Guerry, Jr. from NRC's Executive Director for Operations, James M. Taylor, dated May 25, 1993, NRC made a preliminary determination that $^{137}$Cs levels in baghouse dust can reasonably be attributed to fallout from past nuclear weapons testing, if concentrations are less than about 2 pCi/g (0.074 Bq/g).

to downstream processes have also been contaminated with relatively low concentrations of $^{137}$Cs (e.g., 10 pCi/g (0.37 Bq/g)). In addition, materials used during decontamination may also be contaminated with dust containing $^{137}$Cs concentrations at similar levels above background.

As the result of past inadvertent meltings of $^{137}$Cs sources, a number of steel producers possess a total of about 10,000 tons (9000 metric tons) of incident-related materials, most of which contains $^{137}$Cs concentrations of less than 100 pCi/g (3.7 Bq/g). This material is typically being stored onsite because of the lack of disposal options that are considered cost-effective by the steel companies.[4] It is the disposition of material at these concentration levels that is the subject of this technical position.

*C. Regulatory Position*

General

Because of the ''incident-related'' origin of the $^{137}$Cs-contaminated materials, the Commission has approved a course of action that includes: (1) Exploration of approaches to improve licensee control and accountability to reduce the likelihood of sealed sources entering the scrap metal supply; (2) cooperation with the steel manufacturers and other appropriate organizations to identify the magnitude and character of the problem (with particular emphasis on improving the capability to detect sealed sources before their inadvertent melting); and (3) development of interim guidelines for the disposal of $^{137}$Cs contaminated dust and other incident-related materials (the subject of this technical position).

Specific

Bases for Allowing Transfer and Possession of $^{137}$Cs-Contaminated, Incident-Related Material

The bases for allowing transfer and possession of $^{137}$Cs-contaminated emission control dust and other incident-related materials, under the provisions of existing regulations, are as follows: (1) Any person at a Subtitle C, RCRA-permitted disposal facility involved with the receipt, movement, storage, or disposal of contaminated materials should not receive an exposure greater than 1 millirem (mrem) or 10 microsievert (μSv) per year (i.e., one-hundredth of the dose limit for individual members of the public as defined at 10 CFR 20.1301(A)(1)), above natural background levels;[5]; (2) members of the general public in the vicinity of storage or disposal facilities should not receive exposures and no individual member of the public should be likely to receive a dose greater than 1 mrem (10 μSv) per year above background as a result of any and all transfers and disposals of contaminated materials; (3) handling or processing of the contaminated materials, undertaken as a result of its radioactivity, should not compromise the effectiveness of permitted hazardous waste disposal operations; (4) treatment of contaminated materials must be accomplished by persons operating under a licensee's radiation protection program (note that the licensee can be the steel facility or the entity that treats the incident-related material, either on- or offsite); and (5) transportation of contaminated materials will be subject to U.S. Department of Transportation (DOT) regulations and, as applicable, transportation of contaminated, hazardous materials must be performed by hazardous material employees, as defined in DOT regulations (49 CFR Part 172, Subpart H).

Definition of Contaminated Materials and Initial Incident Response

A melting event generally necessitates extensive decontamination and remediation operations at the EAF or foundry (e.g., replacing refractory bricks and duct work). Subsequent operations include the proper interim handling and management (e.g., accumulation and containment) of emission control dust and other incident-related contaminated materials. Based on a review of several recent incidents, the dust may contain $^{137}$Cs concentrations up to hundreds or thousands of pCi/g (a few to a few tens of Bq/g), whereas the other generally limited-volume, incident-related materials typically contain lower concentrations. As a result, the initial clean-up and collection/treatment/packaging of the contaminated emission control dust and other materials at the EAF or foundry must be performed by an NRC or Agreement State licensee operating under an approved radiation protection program. The licensee is also responsible for compliance with other regulatory requirements (e.g., those of the Occupational Safety and Health Administration and RCRA Treatment Permitting requirements).

Provisions for Disposal at a Subtitle C, RCRA-Permitted, Disposal Facility

Once the decontamination/remediation and collection/treatment/packaging activities have been completed, one of two paths may be followed for the disposal of the incident-related materials, dependent on $^{137}$Cs-concentration levels and whether the final land disposal operation involves the burial of packaged or unpackaged materials.

*1. Packaged Disposal of Treated Waste*

On this disposal path, contaminated materials must be treated through stabilization to comply with all EPA and/or State waste treatment requirements for land disposal of regulated hazardous waste.[6] The treatment operations must be undertaken by either: (i) The owner/operator of the EAF or foundry (licensed by NRC or appropriate Agreement State to possess, treat, and transfer $^{137}$Cs-contaminated, incident-related materials); or (ii) an NRC- or Agreement State-licensed service contractor (operating either on- or offsite). Based on the radiological impact assessment provided in Appendix A, the licensee could be authorized by NRC or an Agreement State to transfer the treated incident-related materials to a Subtitle C, RCRA-permitted, disposal facility, provided that all the following conditions are met:

(a) The $^{137}$Cs-contaminated emission control dust and other incident-related materials are the result of an inadvertent melting of a sealed source or device;

(b) The emission control dust and other incident-related materials have been stabilized to meet requirements for land disposal of RCRA-regulated waste, and have been stored (if applicable) and transferred in compliance with a radiation protection program as specified at 10 CFR 20.1101;

(c) The total $^{137}$Cs activity, contained in emission control dust and other incident-related materials to be transferred to a Subtitle C, RCRA-permitted, disposal facility, has been specifically approved by NRC or the appropriate Agreement State(s) and does not exceed the total activity associated with the inadvertent melting incident.

[4] In April 1995, Envirocare of Utah, Inc., an operator of a mixed-waste disposal site, received authorization from the State of Utah and initiated operations to treat and dispose of $^{137}$Cs-contaminated incident-related (mixed-waste) materials at concentrations not exceeding 560 pCi/g (20.7 Bq/g).

[5] The use of 1 mrem/yr (10 μSv/yr) has no significance or precedential value as a health and safety goal. It was selected only for the purpose of analysis of the levels at which the referenced materials could be partitioned to allow the bulk of the material to be transferred to unlicensed persons. It does not represent an NRC position on the generic acceptability of dose levels. Such levels are established only by rule.

[6] For non-hazardous material covered by this position, stabilization equivalent to that provided for hazardous waste would be necessary.

Moreover, NRC or the appropriate Agreement State will maintain a public record of the total incident-related $^{137}$Cs activity, received by the facility over its operating life, to ensure that the total disposed of $^{137}$Cs activity does not exceed 1 curie (37 GBq);[7]

(d) The RCRA disposal facility operator has been notified in writing of the impending transfer of the incident-related materials and has agreed in writing to receive and dispose of the packaged materials;[8]

(e) The licensee providing the radiation protection program required in paragraph (b), notifies, in writing, the Commission or Agreement State(s) in which the transferor and transferee are located, of the impending transfer, at least 30 days before the transfer;

(f) The stabilized material has been packaged for transportation and disposal in non-bulk steel packagings as defined in DOT regulations at 49 CFR 173.213. (Note that this is a condition established under this technical position and is not a DOT requirement. Under DOT regulations, material with concentrations of less than 2000 pCi/g (74 Bq/g) is not considered radioactive);

(g) In any package, the emission control dust and other incident-related materials, that have been stabilized and packaged as defined in (b) and (f) above, contain pretreatment average concentrations of $^{137}$Cs that did not exceed 130 pCi/g (4.8 Bq/g) of material;[9] and

(h) The dose rate at 3.28 feet (1 meter) from the surface of any package containing stabilized waste does not exceed 20 µrem per hour or 0.20 µSv per hour, above background.[10]

Note that, in defining the pretreatment $^{137}$Cs-concentration value stated in paragraph (1)(g), a factor of 1.5 has been included as a regulatory margin. This factor adds further assurance to the certainty in protection provided by the licensee's: (1) Sampling of $^{137}$Cs concentrations in contaminated materials; (2) measurements of dose rate external to the disposal (and transportation) packagings; and (3) other assumptions included in the radiological impacts assessment.

*2. Disposal of Unpackaged (i.e., Bulk) Treated Waste*

On this disposal path, contaminated materials must also be treated through stabilization to comply with all EPA and State waste treatment requirements for land disposal of RCRA-regulated hazardous waste.[11] The treatment operations must be undertaken by either (i) the owner/operator of the EAF or foundry (licensed to possess, treat, and transfer $^{137}$Cs-contaminated, incident-related materials), or (ii) a licensed service contractor. Based on the radiological impact assessment provided in the appendix, the licensee could be authorized to transfer the stabilized incident-related materials to a Subtitle C, RCRA-permitted, disposal facility, provided that all the following conditions are met. (Note that conditions (a) through (e) are identical to those applicable to packaged disposal of treated waste):

(a) The $^{137}$Cs-contaminated emission control dust and other incident-related materials are the result of an inadvertent melting of a sealed source or device;

(b) The emission control dust and other incident-related materials have been stabilized to meet requirements for land disposal of RCRA-regulated waste, and have been stored (if applicable), and transferred in compliance with a radiation protection program as specified at 10 CFR 20.1101;

(c) The total $^{137}$Cs activity, contained in emission control dust and other incident-related materials to be transferred to a Subtitle C, RCRA-permitted, disposal facility, has been specifically approved by NRC or the appropriate Agreement State(s) and does not exceed the total activity associated with the inadvertent melting incident. Moreover, NRC or the appropriate Agreement State will maintain a public record of the total incident-related $^{137}$Cs activity, received by the facility over its operating life, to ensure that the total disposed of $^{137}$Cs activity does not exceed 1 curie (37 GBq);[12]

(d) The RCRA disposal facility operator has been notified in writing of the impending transfer of the incident-related materials and has agreed in writing to receive and dispose of these materials;[13]

(e) The licensee providing the radiation protection program required in paragraph (b) notifies, in writing, the Commission or Agreement State(s) in which the transferor and transferee are located, of the impending transfer, at least 30 days before the transfer; and

(f) The emission control dust and other incident-related materials, that have been stabilized as defined in (b) above, contain pretreatment average concentrations of $^{137}$Cs that did not exceed 100 pCi/g (3.7 Bq/g) of material.[14]

Note that, in defining the pretreatment $^{137}$Cs-concentration value in paragraph (2)(f), a factor of 2 has been included as a regulatory margin. The factor adds further assurance to the certainty of protection provided by the licensee's: (1) Sampling of $^{137}$Cs concentrations in

[7] The 1-curie (37-GBq) value represents a reasonable maximum bounding activity, associated with several incidents, that could be transferred to an RCRA-permitted facility under the provisions of this position. It also represents a quantity that would be less than the activity disposed of over the operating life of the RCRA-permitted facility if the facility routinely disposed of non-incident-related emission control dust containing background concentrations of $^{137}$Cs.

[8] The NRC staff believes the contract between the licensed facility and the RCRA facility operator is an appropriate vehicle for complying with this provision, provided that the contract specifies the volume of waste, the radionuclide and its average concentration in the waste in picocuries per gram or becquerels per gram, the total aggregated amount of radioactive material in the shipment, the hazardous waste code of the waste, and the EPA identification number of the RCRA disposal facility receiving the waste. The NRC staff will evaluate requests for license amendments to transfer incident-related material based upon the licensee demonstrating that the RCRA disposal facility operator has agreed to the transfer and has made provisions to retain the information about the radioactive material in the waste, along with the information that is required to be retained by the RCRA facility operator under 40 CFR 263.22.

[9] The 130 pCi/g (4.8 Bq/g) value is the concentration, based on the analysis in the appendix and including a regulatory margin of 1.5, that would result in a calculated potential exposure of less than 1 mrem (10 µSv). The disposal of incident-related materials in packaged form allows compliance with this position to be demonstrated through measurement of $^{137}$Cs concentrations, as well as direct radiation levels external to the package. Notwithstanding the redundant approaches to ensure compliance with the exposure criterion, the regulatory margin of 1.5 has been included in determining the acceptable measurables defined in the position.

[10] At this exposure rate, for the exposure period as defined in the appendix, total exposure would not exceed 1 mrem (10 µSv) with a regulatory margin of 1.5.

[11] See footnote 6.

[12] See footnote 7.

[13] The NRC staff believes the contract between the licensed facility and the RCRA facility operator is an appropriate vehicle for complying with this provision, provided that the contract specifies the volume of waste, the radionuclide and its average concentration in the waste in picocuries per gram or becquerels per gram, the total aggregated amount of radioactive material in the shipment, the hazardous waste code of the waste and the EPA identification number of the RCRA disposal facility receiving the waste. The NRC staff will evaluate requests for license amendments to transfer incident-related material based upon the licensee demonstrating that the RCRA disposal facility operator has agreed to the transfer and has made provisions to retain the information about the radioactive material in the waste along with the information that is required to be retained by the RCRA facility operator under 40 CFR 263.22.

[14] The 100 pCi/g (3.7 Bq/g) value is the concentration, based on the analysis in the appendix and including a regulatory margin of 2, that would result in a calculated potential exposure of less than 1 mrem (10 µSv). The disposal of incident-related material in unpackaged (bulk) form dictates that compliance with this position would be demonstrated through measurement of $^{137}$Cs concentrations. Without the redundant approach to ensure compliance with the exposure criterion inherent with the packaged-disposal approach (see footnote 8), the regulatory margin, included in determining the acceptable measurables defined in the position, has been increased to 2.0.

contaminated materials; and (2) other assumptions included in the radiological impacts assessment.

*Treatment, Storage, and Transfer of Emission Control Dust or Other Incident-Related Materials with $^{137}$Cs Concentrations Indistinguishable From Background Levels (i.e., 2 pCi/g (0.074 Bq/g) or Less)*

The EAF or foundry licensed to possess and transfer $^{137}$Cs-contaminated emission control dust, or a licensed service contractor, is authorized to transfer emission control dust and other incident-related materials as if they were not radioactive, provided that the $^{137}$Cs concentration within the emission control dust and other incident-related materials is 2 pCi/g (0.074 Bq/g) of material or less. The foundry or licensed service contractor must determine the $^{137}$Cs concentration using the sampling program discussed below.

*Aggregation of $^{137}$Cs-Contaminated Emission Control Dust and Other Incident-Related Materials*

If applicable, aggregation of $^{137}$Cs-contaminated emission control dust and other incident-related material, before stabilization treatment, is acceptable if performed in compliance with a radiation protection program, as described at 10 CFR 20.1101, and provided that:

(1) Aggregation involves the same characteristic or listed hazardous waste and the wastes must be amenable to and undergo the same appropriate treatment for land-disposal restricted waste;

(2) Aggregation does not increase the overall total volume nor the radioactivity of the incident-related waste; and

(3) Materials, when aggregated, are subjected to a sampling protocol that demonstrates compliance with $^{137}$Cs-concentration criteria on a package-average [15] basis.

*Determination of $^{137}$Cs Concentrations and Radiation Measurements*

$^{137}$Cs concentrations may be determined by the licensee by direct or indirect (e.g., external radiation) measurements, through an NRC- or Agreement State-approved sampling program. The sampling program must be sufficient to ensure that $^{137}$Cs contamination in the stabilized emission control dust and in other incident-related materials, on a package-average basis, is consistent with the concentration criteria in this technical position. The sampling program must provide assurance that the quantity of $^{137}$Cs in any package (see footnote 15) does not exceed the product of the applicable concentration criterion times the net weight of contaminated material in a package.

[15] The term package, as used here, refers to packages used by the licensee to transfer the material to the disposal facility, irrespective of whether this package is also the disposal container.

**Appendix A—Assessment of Radiological Impact of Disposal of $^{137}$Cs-Contaminated Emission Control Dust and Other Incident-Related Materials at a Subtitle C RCRA-Permitted Disposal Facility**

*1. Background*

In the normal process of producing recycled steel, scrap steel is subjected to a melting process. In this process, most impurities in the scrap steel are removed and generally contained within process-generated slag or off-gas. Typically, the off-gas carries dust, that can contain iron and zinc, together with certain heavy metals, through an emission control system to a ''baghouse,'' where the dust is captured in ''bag-type'' filters. Hazardous constituents within the dust, principally lead, cadmium, and chromium, can cause the U.S. Environmental Protection Agency (EPA) to designate the dust as a hazardous waste, under the Resource Conservation and Recovery Act (RCRA)—often as the listed waste K061.

Typically, when the scrap consists largely of junk automobiles, the dust contains a high percentage (greater than 20 percent) of zinc, which can be a valuable recovery product. Moreover, the zinc recovery process produces slag and other byproducts that have recycle potential. If economic (e.g., low zinc content) or process considerations preclude these recycle options, the dust may be treated and disposed of in a hazardous waste disposal facility. EPA has specified treatment standards for the various hazardous constituents of the dust in 40 CFR 268.40. Solidification is the treatment process typically used to meet these standards. On the other hand, dust from steel production at basic oxygen furnaces and open hearth furnaces is excluded from regulation as hazardous waste (40 CFR 261.4(b)(7)(xvii)).

Because the recycling of steel involves the addition of natural materials (primarily lime and ferromanganese), very low levels of radioactivity, ubiquitous in the environment, are involved in the production process. One of these radionuclides is cesium-137 ($^{137}$Cs) which now occurs in the environment as a result of global fallout from past weapons-testing programs. $^{137}$Cs has a 30-year half-life (i.e., a quantity of this radionuclide and its associated radioactivity will decrease by half every 30 years). The decay of $^{137}$Cs and its very short-lived daughter produces emissions of beta particles and gamma rays.

The principal hazard from the beta particles can only be realized when it enters the human body. The principal hazard from the gamma rays is as an external source of penetrating radiation similar to the type of exposure received from an X-ray. Because of its volatility in the very high-temperature (typically 3000 degrees fahrenheit or ~1650 degrees celsius) steel-making process, $^{137}$Cs is volatilized and transported in the furnace off-gas and, as it condenses, becomes a constituent of the emission control (baghouse) dust. Normal background $^{137}$Cs concentrations in dust have been measured at picocurie per gram levels (0.024 to 1.23 pCi/g) [1] or thousandths of a becquerel per gram (Bq/g). This concentration is consistent with the general range of background levels measured in soils within the United States whereas concentrations of 10 pCi/g (0.37 Bq/g) are relatively common in drainage areas.[2] As a result of this information, the U.S. Nuclear Regulatory Commission has determined that $^{137}$Cs concentrations in emission control dust below 2 pCi/g (0.074 Bq/g) can be attributed to fallout from past weapons testing.[3]

*2. Statement of Problem*

The inadvertent melting of a licensed $^{137}$Cs sealed source with scrap steel at an electric arc furnace (EAF) or foundry typically results in the contamination of the steel producer's emission control system and the generation of potentially large quantities (e.g., of the order of 1000 tons or 900 metric tons) of $^{137}$Cs-contaminated emission control dust. Facility cleanup operations will produce an additional quantity of contaminated material and, depending on the effectiveness of cleanup operations, further generation of contaminated dust or cleanup-related materials can occur. Furthermore, if the occurrence of the melting event is not immediately detected, contamination can unknowingly be carried forward with the dust into zinc-recovery process streams. In one case, for example, this has led to $^{137}$Cs contamination of the zinc-rich, splash condenser dross residue, referred to as SCDR material. In the incidents to date, total quantities of these contaminated materials have not exceeded 2000 tons (1800 metric tons) per event. The $^{137}$Cs concentration in all these materials can vary, but in typical past events, much of the material is contaminated at levels ranging from 2 pCi/g (0.074 Bq/g) to a few hundred pCi/g (most below approximately 100 pCi/g or 3.7 Bq/g). Smaller volumes (typically less than 5 percent of the total volume) have included concentrations at nanocurie/gram levels (thousands of pCi/g or a few tens of Bq/g).

The intent of this analysis is to characterize the potential radiological impacts associated with the alternative options for disposal of $^{137}$Cs-contaminated emission control dust and other incident-related materials at a Subtitle C, RCRA-permitted facility. Because RCRA hazardous wastes must be treated to comply with the requirements for land disposal of restricted waste, the potential radiological impacts associated with treatment processes required consideration. To protect against these radiological impacts, the position includes the provision that treatment of $^{137}$Cs-contaminated emission control dust and other incident-related

[1] A picocurie is one-trillionth of a curie and represents a decay rate of one disintegration every 27 seconds or 1/27 of a becquerel.

[2] Letter to William Lahs, U.S. Nuclear Regulatory Commission, from Andrew Wallo III, U.S. Department of Energy, dated May 20, 1993.

[3] Letter from James M. Taylor, NRC, to William Guerry, Jr., Collier, Shannon, Rill, and Scott, dated May 25, 1993.

materials be performed by an NRC or Agreement State licensee. The licensee would operate, either on- or offsite, under an approved radiation protection program, as well as any required RCRA treatment permit. Such controls are necessary because of the wide range of contaminated materials and their physical forms, together with the variability in EPA-approved treatment processes. Under this decision, the Subtitle C, RCRA-permitted disposal facility would be receiving the emission control dust and other incident-related materials after their treatment to stabilize the incident-related material. This stabilized material would be, or would be equivalent to, the form necessary to stabilize the RCRA-hazardous constituents (specifically, lead, cadmium, and chromium); that is, a non-dispersible,[4] solid (e.g., cement-type) form. As a result, the potential radiological hazard from the ''treated'' (stabilized) material during disposal operations is associated with its characteristic as an external source of radiation.

After disposal, $^{137}$Cs could only become a hazard through water pathways if a sufficient quantity and concentration of $^{137}$Cs were to: (1) Become available, (2) be leached from its solid form, (3) be released from the disposal facility, and (4) enter a drinking water supply. No significant radiological hazard would be expected to result from inadvertent intrusion into the disposed of waste after facility closure. Notwithstanding the hazard to the intruder from the hazardous waste constituents, or other hazardous wastes, constraints placed on the total $^{137}$Cs activity and concentration, and the waste form, can ensure that radiological exposures would not exceed those that would be received from residing over commonly measured background $^{137}$Cs concentrations in the United States (see discussion under ''Intruder Considerations'').

The following analyses will therefore be directed at an evaluation of the potential direct, water pathway, and intruder hazards and will provide a perspective on their significance.

*3. Direct Exposure*

After the inadvertent melting of a $^{137}$Cs sealed source at an EAF or foundry, the relatively volatile $^{137}$Cs will leave the furnace as an offgas and be commingled with the normal emission control dust. As a result, concentrations of $^{137}$Cs contained in this dust (and other materials associated with furnace clean-up operations or subsequent dust recycle process streams) will increase. Thus, the rate of radiological exposure from this material will be similar in type, but different in magnitude, than that received from the typical background levels of $^{137}$Cs. Any change in magnitude of the exposures to workers at the disposal facility from this contaminated material when compared to the exposure received from typical emission control dust would depend on: (1) Differences in $^{137}$Cs concentrations; (2) variations in the physical/chemical properties of the materials disposed of; and (3) changes in worker time-integrated interactions with contaminated materials.

The three key variables above are particularly important in the development of this technical position. Of significance to all three variables, the approach defined in the position calls for treatment (stabilization) of incident-related materials (to comply with requirements for land disposal of restricted waste) to take place ''under license,'' at the location where the material was generated, or at the site of a service contractor who has been permitted for stabilization treatment of the material either on or off the steel company site. Complying with the ''Treatment Standards for Hazardous Wastes,'' defined at 40 CFR 268.40, will result in a solid waste form from which exposure rates will be smaller than those originating from the hazardous waste form (e.g., dust) before treatment. More importantly, treatment of the contaminated materials, under license, will obviate the need to specifically address potential treatment-related radiological exposures at unlicensed, RCRA-permitted, treatment facilities. Thus, under the approach of this technical position, any minimal exposure to workers who have not been trained in radiation safety would be limited to disposal operations.

Furthermore, because the origin of the $^{137}$Cs-contaminated materials is the result of a melting incident, upper-bound values can be established for the volume, weight, radioactive material concentration, and total activity of the contaminated material, on an incident basis. The base case analysis in this appendix presumes that the contaminated material involves a volume of 40,000 cubic feet (1132 cubic meters), a weight of 2000 tons (1800 metric tons), and a total activity content of less than a 1 curie (Ci) or 37 GBq of $^{137}$Cs. These values are generally consistent with the particulars from the incidents that have occurred to date.

Within these constraints, the starting point in the direct exposure calculation is to estimate the radiation dose rate at a distance of 3.28 feet (1 meter) from the surface of a semi-infinite volume (i.e., infinite in areal extent and depth from the point of exposure) of solidified contaminated material.[5] The calculations assume that the initial $^{137}$Cs contamination in all untreated dust is 100 pCi/g (3.7 Bq/g). Direct exposure results scale linearly for other concentration levels, if the waste configuration is unchanged.

Stabilization treatment,[6] conducted under a licensed radiation protection program, is achieved by mixing moist dust with additives (e.g., liquid reagent to adjust oxidation potential and portland cement/ fly ash).[7] These additives (typically presumed to add 30 parts by weight to 100 parts of dust or contaminated material) would result in a solidified product that would contain $^{137}$Cs concentrations at about 77 percent of initial concentrations (e.g., 77 pCi/g (2.84 Bq/g)). Because of allowable variations in the solidification processes (e.g., from the production of granularized aggregate to solidified monoliths), the bulk density of the solidified material can range from about 1.4 to 2.5 g/cm$^3$. A representative dose [rate] conversion factor[8] under these conditions (calculated at a density of 1.5 g/cm$^3$) would typically be less than 49 microem/hour (µrem/hr) or 0.49 microsieverts/hour (µSv/hr), at a distance of 3.28 feet (1 meter) from the surface of a hypothetical semi-infinite volume of the solidified material.[9]

Because the quantities of treated dust and other incident-related materials are not semi-infinite in volume, the actual dose rate/ distance relationships from finite volumes of contaminated materials will be less. The reduction can be calculated for various volumetric sources through the use of shape factors. Shape factors have been calculated for several configurations that are likely to occur during operations from the time the contaminated treated material is received at the RCRA-permitted disposal facility through its disposal. The shape factors can be determined from Figures 1 through 6 for various distances between a specific source configuration and an exposed individual. Typically, at a distance of 3.28 feet (1 meter), these factors range from about 0.03 to 0.5 (Figures 1 through 5), and have been calculated without accounting for the limited shielding provided by any packaging. As the distance from the contaminated materials increases to 9.84 feet (3 meters), the shape factors for these similar geometries become smaller, ranging from about 0.004 to 0.2. The largest, likely dose rate potentially experienced by an individual involved in the disposal process, measured at 3.28 feet (1 meter), would be from the sides of large containers or shipments of contaminated materials, and would be expected to range from about 10 to less than 14 µrem/hour (0.14 µSv/hr) above background (typically 8 to 12µrem/hr (0.08 to 0.12 µSv/hr).[10] From an open trench (Figure 4), filled with

[4] In the context used, the term ''non-dispersible'' means that any radiological impacts from resuspended material are inconsequential in comparison to the impacts from direct external exposures resulting from the emission of gamma radiation in the $^{137}$Cs decay process.

[5] This assessment is generally consistent with the approach employed in ''Risk Assessment of Options for Disposition of EAF Dust Following a Meltdown Incident of a Radioactive Cesium Source in Scrap Steel,'' SELA–9301, Stanley E. Logan, April 1993.

[6] In the context of this position, stabilized treatment does not include either onsite or offsite high-temperature metals recycling processes.

[7] This treatment may include the addition of special stabilization reagents, such as clays, or involve other RCRA-approved stabilization technologies, that reduce the leachability of $^{137}$Cs, although the radiological impacts analysis indicates that such processes are not necessary to protect public health and safety, and the environment.

[8] A dose conversion factor represents a value that allows a radionuclide contamination level to be converted to an estimated exposure rate.

[9] The dose rates in this appendix have been calculated through use of the Microshield computer program, Grove Engineering, Inc., version 4.2, 1995. The value of 49 µrem (0.49µSv)/hour represents 0.77 of the 62.9 value shown on Figure 1.

[10] The two-thirds loading of the 30-cubic yard box is related to the typical maximum payload weight that can be transported by truck without an overweight permit. If the boxes referred to in Figures 1 and 2 were full, the dose rate would increase by less than a factor of 1.5. Similarly, if the assumed additive weight percent (i.e., 30 percent) is varied over a reasonable range from 20 to 40 percent, the resulting dose rate would change in an inversely proportional manner.

contaminated materials, the calculated dose rate would also be somewhat less than 13 μrem/hr (0.13 μSv/hr) measured directly over the trench at a 3.28 feet (1 meter) distance. Again, these values represent 0.77 of the respective values indicated on the figures because of solidification additives. Figures 6 and 7, respectively, show the variation in dose rate with the width of the trench and depth of the waste. Figure 8 is provided to show the change in dose rate versus the distance offset from the side of the trailer-type container considered in Figure 3.

A typical disposal rate at a trench within an RCRA-permitted facility would generally exceed 500 tons (450 metric tons) per shift.[11] Assuming this disposal rate of 500 tons (450 metric tons) per shift applies to the disposal of treated, $^{137}$Cs-contaminated, incident-related material (approximately 20 to 25 truckloads in 8 hours), it would require approximately 4 times this period of time to dispose of 2000 tons (1800 metric tons). (Note that the rate of arriving material would likely be dictated by transportation arrangements, so that the 32 hours required to dispose of the contaminated material could be spread over several days or weeks.) Facility workers, therefore, would, on average, only be exposed to finite volumes of contaminated material for a maximum period of 32 worker-hours. Applying the highest likely dose rate (approximately 13 μrem/hr (0.13 μSv/hr) from the side of a trailer containing the contaminated materials), and presuming exposure at a 3.28-ft (1-meter) distance for the entire 32-hour period, a worker would receive a dose of less than 0.5 mrem (5 μSv) above background.

Qualitatively descriptive time and motion data gathered from three RCRA-permitted disposal facilities indicate that the above-calculated dose is conservative for two principal reasons: (1) The workers having the most significant exposure to materials, from receipt to disposal, are effectively at greater distances than 3.28 feet (1 meter); and (2) their exposure, at this distance, is over time periods significantly less than the assumed receipt through disposal time period of 32 hours. As a result, actual exposures are expected to be significantly less than 0.5 mrem (5 μSv).

This conservative estimate of potential exposure is based on the aforementioned time-distance assumptions and is expected to bound reasonable interactions of disposal facility workers with the stabilized incident-related materials. For example, incident-related material could be stored at the disposal site or samples of the treated material could be subjected to sampling activities. In the first case, if a 90-day storage period is presumed, the average exposure distance over the entire period needed to ensure a dose less than the position's exposure criteria would be on the order of 10 to 20 meters (see Figures 1 through 3, which illustrate the decrease in dose rate as a function of distance from the source). In the second case, the typical activity in a 100-g sample would be no greater than about $10^{-2}$ μCi (370 Bq). The dose rate from such a sample would be less than 0.1 μrem/hr (0.001 μSv/hr) at a distance of 1 foot (0.3 meters).

To place the significance of this calculation into perspective, an estimate can be made of worker exposure from the presumed handling, treatment, and disposal of normal emission control dust (i.e., dust that has not been contaminated with $^{137}$Cs from a melted source). This dust would contain background levels of $^{137}$Cs (approximately 1 pCi/g (0.037 Bq/g)). Therefore, a worker interacting with this material at an effective distance of 3.28 feet (1 meter) over about 300 8-hour shifts (a little more than a working year) would receive a total maximum exposure of about 0.5 mrem (5 μSv). The magnitude of this exposure is in the same range as the exposure calculated for the disposal of the contaminated materials from a single melting event. Moreover, the potential exposure from the ''melting event'' was estimated under the extremely conservative assumption that all materials were contaminated at levels of 100 pCi/g (3.7 Bq/g).

The imposition of a 1–Ci (37–GBq) criterion on the total incident-related activity that could be disposed of at any one Subtitle C, RCRA facility (see following discussion on water-pathway considerations) should further ensure that worker exposures from $^{137}$Cs-contaminated emission control dust and other incident-related materials will not exceed 1 mrem/year (10 μSv/year) integrated over the lifetime of the facility.

4. Water-Pathway Considerations

The proposed approach to manage $^{137}$Cs-contaminated emission control dust and other incident-related materials presumes licensee treatment of these materials to comply with requirements for land disposal of restricted waste. Thus, the radiological, and potentially hazardous chemical constituents of these materials, will be incorporated into a stable, solid (e.g., cement-type) form, similar to that required for routine RCRA-permitted disposal of emission control dust. As a result, the possibility of $^{137}$Cs presenting a hazard through a water pathway requires consideration of: (1) the quantity of $^{137}$Cs available; (2) the degree to which the $^{137}$Cs could be leached from its waste matrix; and (3) the extent that any leached $^{137}$Cs could migrate into a water supply.

The disposal of $^{137}$Cs in treated emission control dust and other incident-related materials would be constrained by this policy to a total activity of 1 Ci (37 GBq). In the previous reference-basis analysis, an effective concentration, in the treated waste, of 77 pCi/g (2.84 Bq/g) was evaluated—the originally assumed contaminated material concentration reduced by 30 percent as a result of the added mass associated with treatment. Both the quantity and position-defined concentration values place bounds on any potential water pathway hazard. In the actual wastes that are subject to potential disposal under the provisions of this position, the concentration of $^{137}$Cs averaged over all the treated waste would typically be significantly less than the defined concentration criteria.

Furthermore, because the $^{137}$Cs is contained in a solid matrix and buried within a facility in which the amount of water infiltration is minimized, any $^{137}$Cs removal from its final disposal location would be limited while these conditions remain in effect. The chemistry of any water interacting with the solidified, $^{137}$Cs-contaminated waste would also be expected to limit the leaching process (e.g., avoidance of acidic environments), because of the controlled nature of the Subtitle C, RCRA-permitted disposal site and the types and nature (e.g., no liquids) of the wastes accepted for disposal. Any water that leached $^{137}$Cs from the waste would normally be collected in a leachate collection system at volumetric concentrations expected to be far less than those existing in the treated waste. The chemistry of the fill materials used at the disposal site could also provide a sorbing medium if any $^{137}$Cs leached from the solidified waste. Finally, the location of Subtitle C, RCRA-permitted disposal sites is such that the source of any water supply would typically be some distance from the disposal site.

These chemistry and distance factors are also likely to be major factors in delaying the arrival of $^{137}$Cs at a receptor well because of retardation effects. This retardation, in terms of its effect on the time required, under a worst-case scenario, for the $^{137}$Cs to reach a water supply, is such that significant radioactive decay of the $^{137}$Cs inventory is likely (the radioactive half-life of $^{137}$Cs is 30 years) before the $^{137}$Cs could potentially reach the water supply.

Although qualitative in nature, and based on considerations that can vary among Subtitle C, RCRA-permitted disposal sites, the previous discussion has focused on the factors that are likely to prevent any significant water-pathway hazard. The following, more quantitative assessment, is provided to conservatively bound any water-pathway hazard that could potentially occur under extremely unlikely conditions.

The leachability of $^{137}$Cs from any solid waste form that complies with the land disposal restrictions for the waste's non-radiological hazardous constituents is likely to be extremely limited after initial waste placement. After the end of operations and a post-closure care period of 30 years, a worst-case scenario presumes that processes take place to degrade the site so that infiltrating water from the surface passes unimpeded through the contaminated waste. In predicting the dissolution of $^{137}$Cs under these conditions, a critical process is the partitioning of the $^{137}$Cs that takes place between the waste, soil, and infiltrating water. Conservatively assuming that the partitioning from the solid waste form is similar to that from the interstitial backfill soil to water, an estimate can be made of the amount of $^{137}$Cs that can leach into the infiltrating water.

The most important parameter in estimating this transfer, as well as the subsequent movement of the $^{137}$Cs in groundwater, is the distribution coefficient, ''$K_d$.'' This parameter expresses the ratio at equilibrium of $^{137}$Cs sorbed onto a given weight of soil particles to the amount

[11] Note that if treatment at an RCRA-permitted facility were required, the limiting operational handling rate for the treated materials may be limited to 100 to 200 tons (90 to 180 metric tons) per shift.

remaining in a given volume of water. The higher the value of the distribution coefficient, the greater the concentration of $^{137}Cs$ remaining in the soil. The $K_d$ value can be affected by factors such as soil texture, pH, competing cation effects, soil porewater concentration, and soil organic matter content.[12] For the non-acidic, sand/clay/soil environments presumed to represent the RCRA-permitted disposal facilities, a $K_d$ value of 270 milliliter (ml)/g was selected from the Footnote 12 reference as being appropriate for the subsequent bounding, conservative analysis.

To model the potential groundwater impacts, the RESRAD[13] code was used. For the representative case, the bounding 40,000 cubic feet ($ft^3$) or 1132 cubic meters ($m^3$) of treated material were presumed to be disposed of in a volume measuring 100-ft (30.4-m) length × 20-ft (6.09-m) width × 20-ft (6.09-m) depth. All this material was assumed to contain a $^{137}Cs$ concentration of 77 pCi/g (2.84 Bq/g). Notwithstanding the actual layouts of Subtitle C, RCRA-permitted facilities, a well was presumed to be located and centered at the downgradient edge of this specific volume of waste. To maximize the hazard as calculated by the RESRAD model, the hydraulic gradient was considered to be parallel to the length of the disposed volume of material. Infiltration representative of a humid site was presumed and a minimal unsaturated zone thickness of 3.28 ft (1 m) was assumed to separate the contaminated zone from the saturated zone. The value assigned to $K_d$ in the unsaturated zone was 270 ml/g. Assessments beyond this representative case evaluation are subsequently discussed.

The results from this bounding analysis indicate that drinking water dose rate would be insignificant (e.g., far less than a microrem ($10^{-2}$ μSv) per year). This result is not surprising because the retardation provided, even in the 3.28-ft (1-m) deep unsaturated zone and the saturated zone, is sufficient to preclude drinking water doses for almost 700 years. During this period, the activity of $^{137}Cs$ would decay (i.e., be reduced by radioactive decay) by a factor of about 10 million.

Note that, although it is considered an unrealistic scenario, the drinking of the leachate directly from the disposal trench after a period of 30 years would only result in a calculated exposure of about 7 mrem/year (70 μSv/year).[14]

To consider the effects of a range of parameters, including other $K_d$ values, on the results of this bounding analysis, the following analyses are presented. Based on the typical existing volumes and $^{137}Cs$ concentrations of incident-related materials, the imposition of a constraint on $^{137}Cs$ concentration effectively bounds the total activity that could be disposed of at a Subtitle C, RCRA-permitted facility, from a single steel company site, to a few tens of millicuries (a few GBq).[15] Material at higher concentrations would require disposal at either a mixed-waste disposal facility or a licensed low-level waste disposal site. Thus, for the potential disposals at the Subtitle C, RCRA-permitted site to approach the 1–Ci (37–GBq) incident-related material constraint in this position, disposals of materials from several incidents would have to occur. The total volume of material, in this case, would still represent only a small fraction of an RCRA-permitted facility's disposal capacity. Repeating the RESRAD analysis discussed above under these assumptions, but respectively considering lower $K_d$ values in the contaminated, unsaturated, and saturated zones, would still result in drinking water doses of less than 1 mrem (10 μSv) per year unless the $K_d$ values in all zones approach single-digit values. Even in these cases (e.g., $K_d$ equal to 2.7), separation of the hypothesized well location from the disposed material by about 328 feet (100 meters) would reduce dose rates below 1 mrem (10 μSv) per year because of the decay of $^{137}Cs$ brought about by the increased retardation times.

The concentration constraints in this position, coupled with the limited number of inadvertent melting situations to which this position could be applicable, and the case-by-case NRC or Agreement State approval of the proposed material transfers, are believed to provide a sufficient basis to ensure protection of public health and safety, and the environment from water-pathway considerations. Nevertheless, to provide further protection, should a single Subtitle C, RCRA-permitted disposal facility accept incident-related material from more than one incident, the position includes a total incident-related $^{137}Cs$ activity constraint of 1 Ci (37 GBq). The magnitude of this constraint is based on the typical bounding activity associated with an inadvertent melting of $^{137}Cs$ sources that have occurred to date at EAFs or foundries. In large measure, it has been included to provide assurance that the position is only directed at the ultimate disposition of radioactive material that exists in the environment as a result of specific inadvertent melting incidents. However, it also provides a constraint on the extent of volumetric contamination as a function of concentration. The practical effect, as previously alluded to, is to limit the disposal volumes of incident-related contaminated materials to a small fraction of total disposal site capacity for hazardous waste. As a result of this volumetric limit, the constraint would further ensure that any exposures occurring offsite over the operating life of the Subtitle C, RCRA-permitted facility would be equal to or less than 1 mrem/year (10 μSv/year), if integrated over the facility's operating life.

Again, the activity constraint and the water pathway considerations can be placed in perspective by evaluating the potential normal disposal of EAF emission control dust at a Subtitle C, RCRA-permitted facility. If this dust includes a background $^{137}Cs$ concentration of 1 pCi/g (0.037 Bq/g), and the facility can treat 200 tons (180 metric tons) of dust per day, the total quantity of $^{137}Cs$ disposed of annually would be about 50 mCi (1.85 GBq). Thus, over a facility operating period of about 20 years, the total quantity of $^{137}Cs$ disposed of could equal the 1-Ci (37 GBq) incident-related material activity constraint.

*5. Intruder Considerations*

In the development of its licensing requirements for land disposal of radioactive waste in 10 CFR Part 61, NRC considered protection for individuals who might inadvertently intrude into the disposal site, occupy the site, and contact the waste. In the context of this position, this possibility has been considered although the greater risk to the intruder would likely result from the non-radiological hazardous constituents at the site.

In the intruder scenarios applied in the development of NRC's LLW standards,[16] an inadvertent intruder was assumed to dig a 3-m (9.9-ft) deep foundation hole for construction of a house. The top 2 m (6.6 ft) of the foundation were assumed to be trench cover material and the bottom 1 m (3.28 ft) was assumed to be waste. Based on the details of the scenarios, which included these and other considerations, the intruder interacted with material whose concentration had been reduced from the waste concentration by a factor of 10. Presuming similar scenarios and assuming intrusion occurs immediately after a post-closure care period of 30 years, the intruder would be exposed to a 137Cs concentration of about 4 pCi/g (0.15 Bq/g); that is, 77 pCi/g (2.84 Bq/g) reduced by the factor of 10 and an additional factor of 2 to account for radioactive decay). Even for this worst-case situation in which all the incident-related waste was presumed to have initial 137Cs concentrations of 77 pCi/g (2.84 Bq/g), the projected intruder exposure would range from 0.8 to 3.8 mrem (8 to 38 μSv/year).[17] As noted above, the average concentrations over large volumes of incident-related material would be expected to be far less than 77 pCi/g (2.84 Bq/g).

*6. Conclusions*

These bounding analyses indicate that some significant volume of $^{137}Cs$-contaminated emission control dust and other incident-related materials from an inadvertent melting of a sealed source can be disposed of at a Subtitle C, RCRA-permitted

[12] "Default Soil Solid/Liquid Partition Coefficients, $K_d$s, for Four Major Soil Types: A Compendium," M. Sheppard and D. Thibault, *Health Physics*, Vol. 59, No. 4, October 1990, pp. 471–482.

[13] RESRAD, Version 5.0, Argonne National Laboratory, September 1993.

[14] This dose estimate is based on comparing leachate concentrations with the water effluent concentration in 10 CFR Part 20, Appendix B.

[15] For example, the total activity contained in 2000 tons (1800 metric tons) of material, contaminated at a level of 77 pCi/g (2.84 Bq/g), would be about 0.14 curies (5.2 GBq). It would be unlikely that all the material from a particular incident would be at the maximum concentration defined in the technical position.

[16] See NUREG–0782, Vol. 4, Draft Environmental Impact Statement on 10 CFR Part 61, "Licensing Requirements for Land Disposal of Radioactive Waste," September 1981.

[17] These estimates are based on the concentration to dose conversion values in NUREG–1500, "Working Draft Regulatory Guide on Release Criteria for Decommissioning: NRC Staff's Draft for Comment," August 1994. Appropriate adjustments of the tabulated information were made to reflect the occupancy and shielding assumptions made in NUREG–0782 (see Footnote 16).

facility with negligible impacts to public and worker health and safety and the environment. This method for disposal, if implemented according to the limitations stipulated in this position, is very unlikely to cause worst-case exposures that exceed 1 mrem (10 μSv) to any worker at the disposal facility or to any member of the public in the vicinity of the facility. The design, operations, and post-closure activities that take place at Subtitle C, RCRA-permitted facilities will ensure that radiological impacts from $^{137}Cs$ will also be negligible in future timeframes. Proper disposal of these materials would protect public health and safety, and the environment to a greater degree than the alternative of indefinitely storing these materials at a steel company facility. The calculated public health and safety and environmental impacts of disposition of specified incident-related materials at a Subtitle C, RCRA-permitted facility can also be used to determine an optimum course for disposal, if disposition alternatives exist.

BILLING CODE 7590–01–P

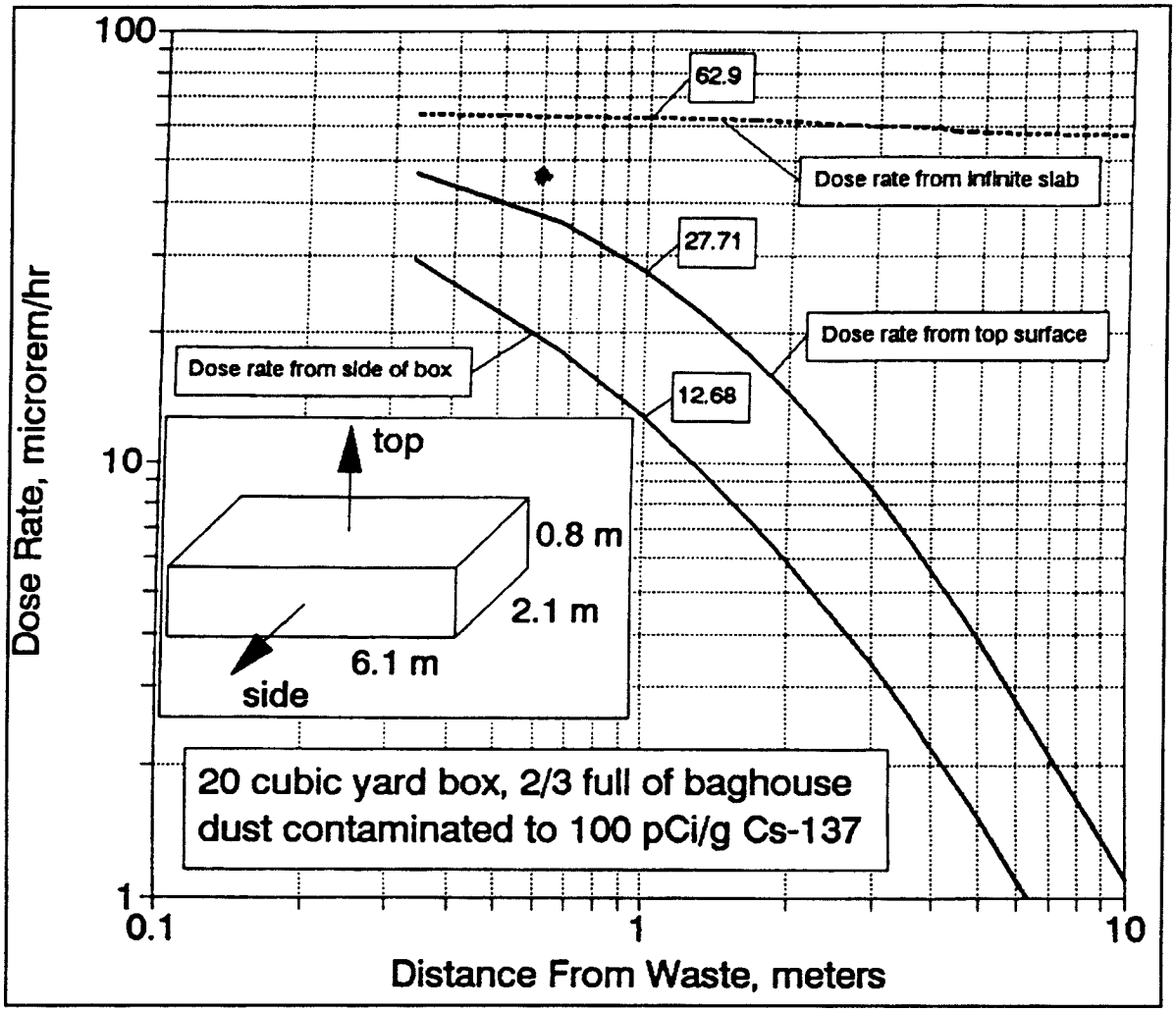


Figure 1. Shape Factor Plot for 20 Cubic Yard Container

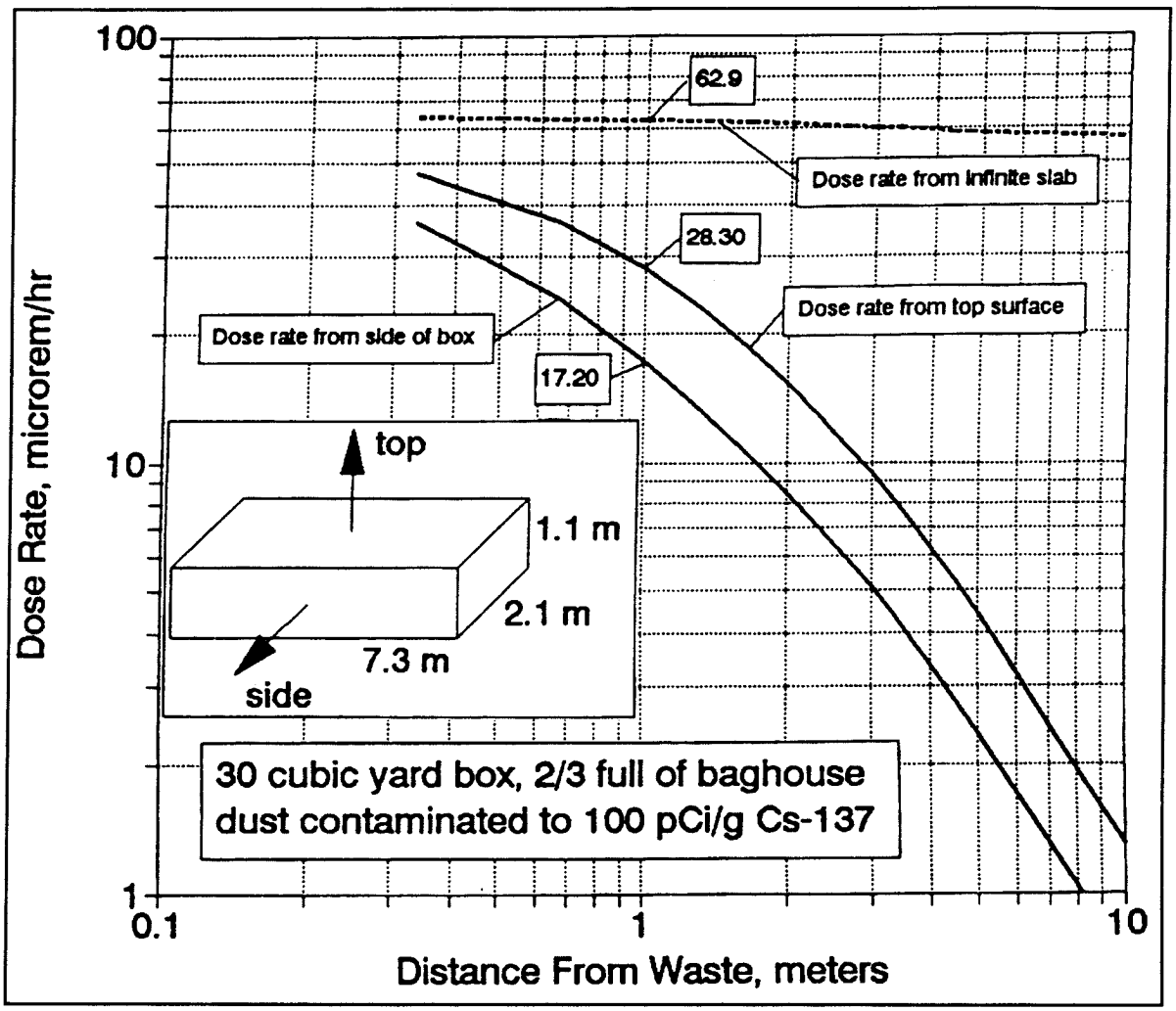


Figure 2. Shape Factor Plot for 30 Cubic Yard Container

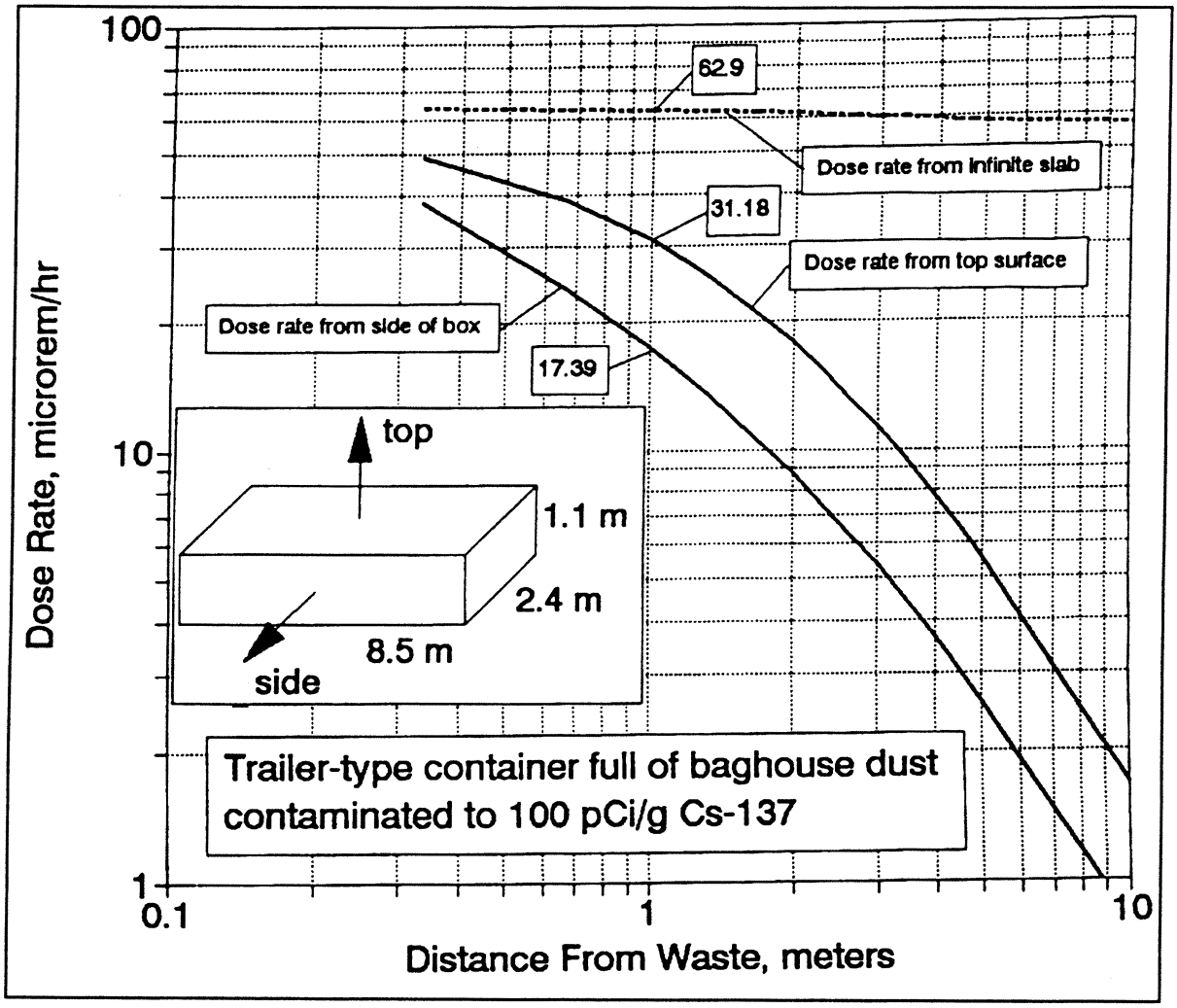


Figure 3. Shape Factor Plot for Trailer-Type Container

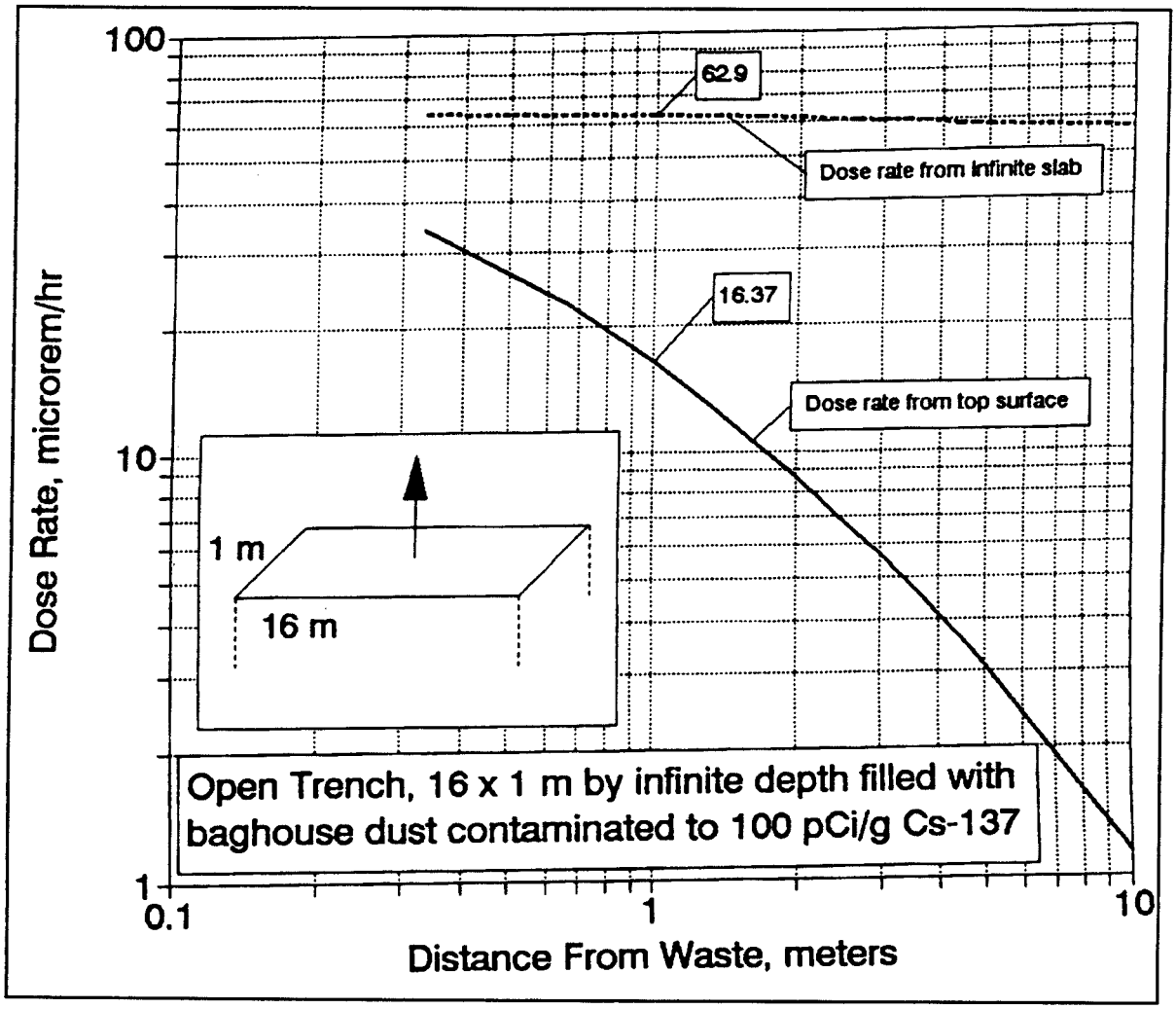


Figure 4. Shape Factor Plot for Reference Open Trench

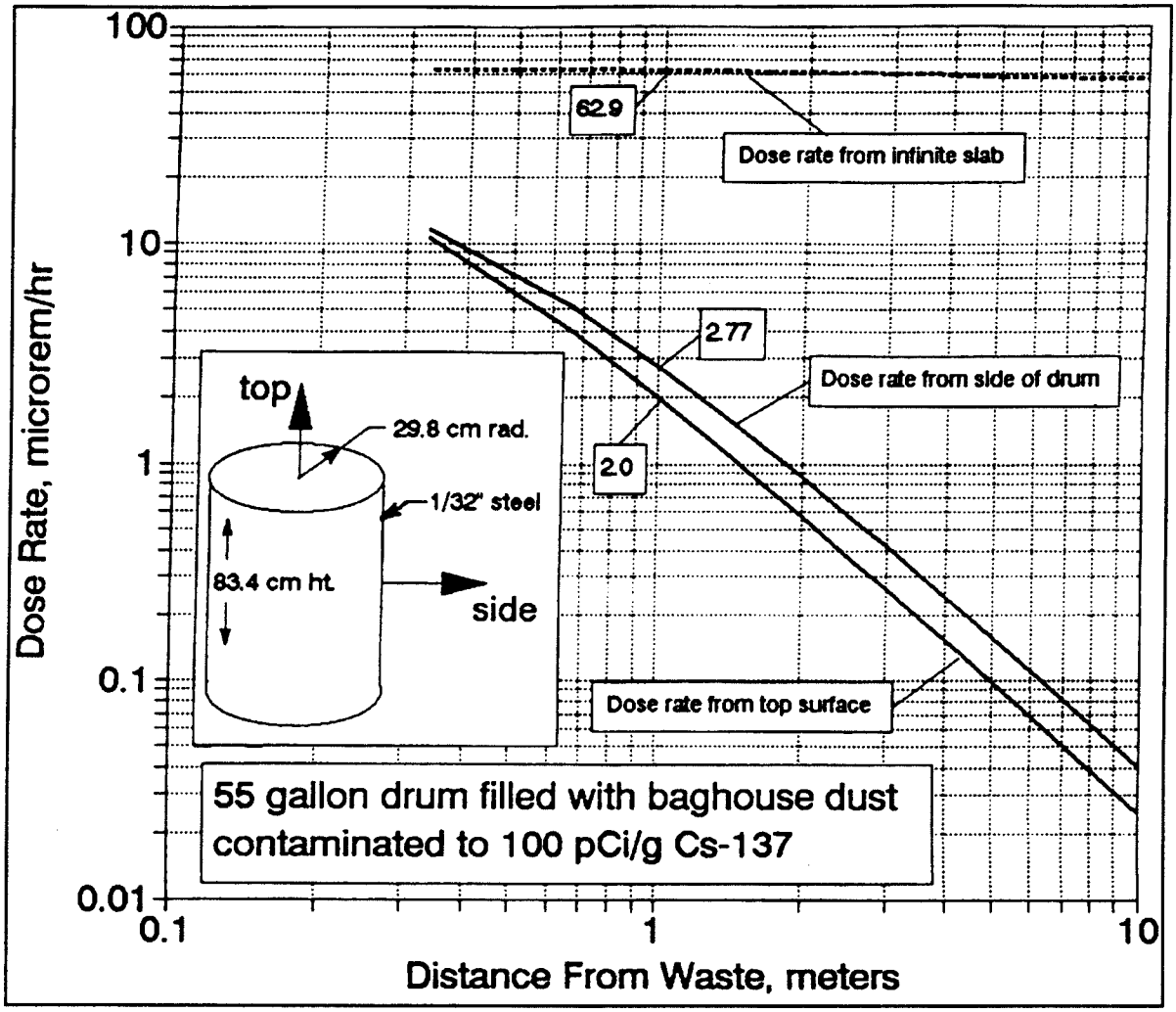


Figure 5. Shape Factor Plot for Standard 55 Gal. Drum

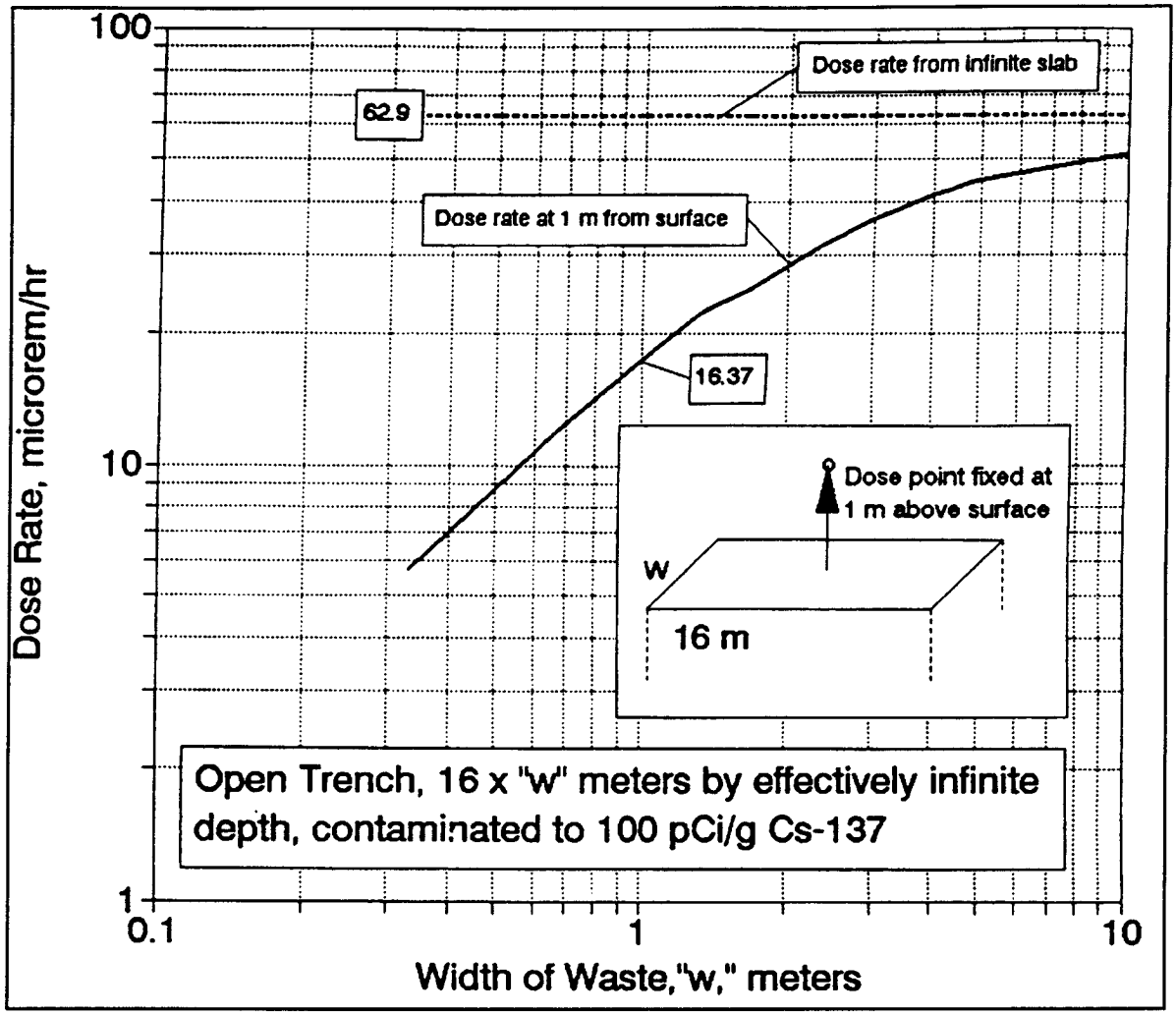


Figure 6. Dose Rate as a Function of Trench Width

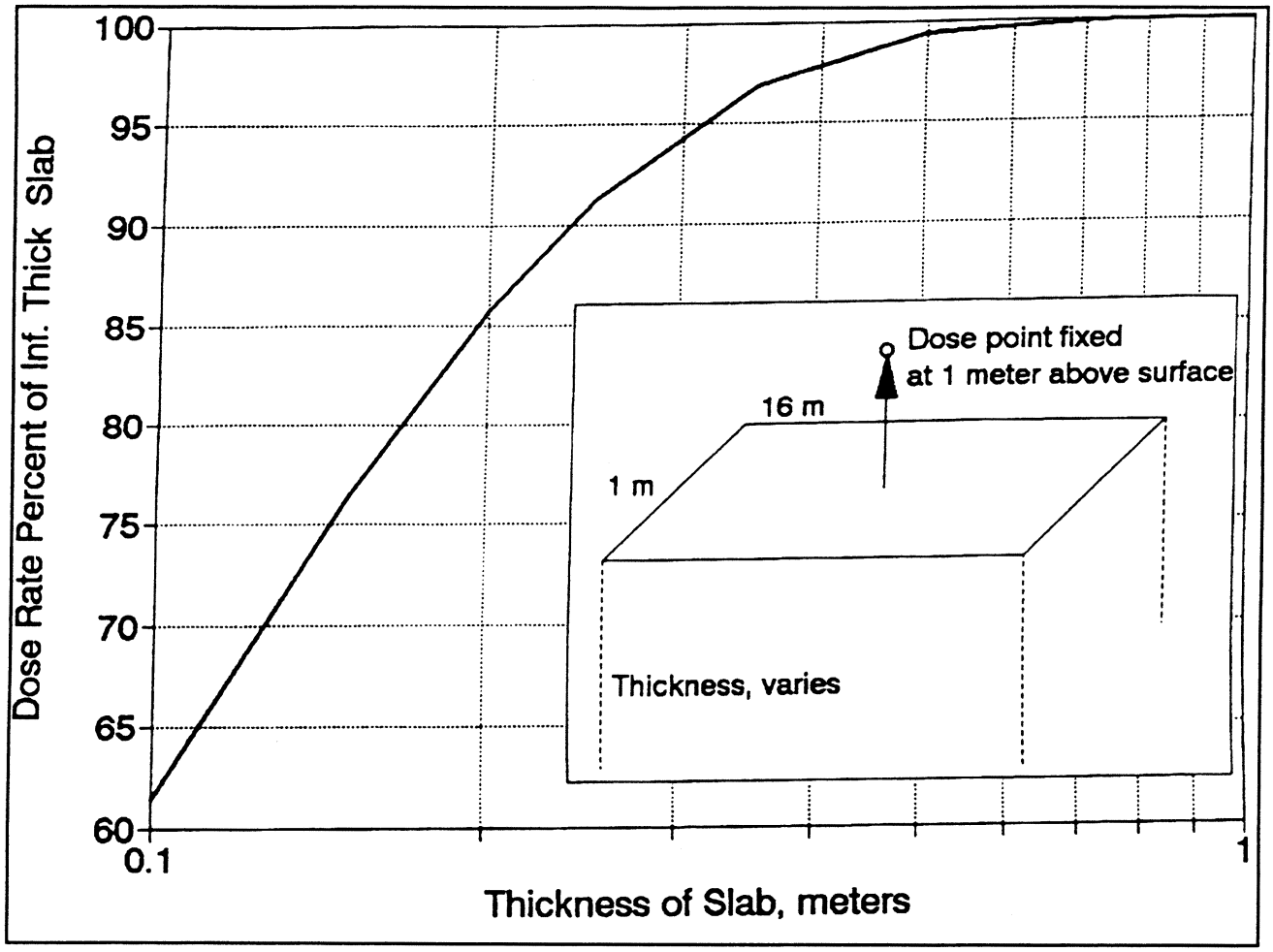


Figure 7. Dose Rate (Expressed as a Percentage of an Infinite Slab Dose Rate) as a Function of Trench Thickness

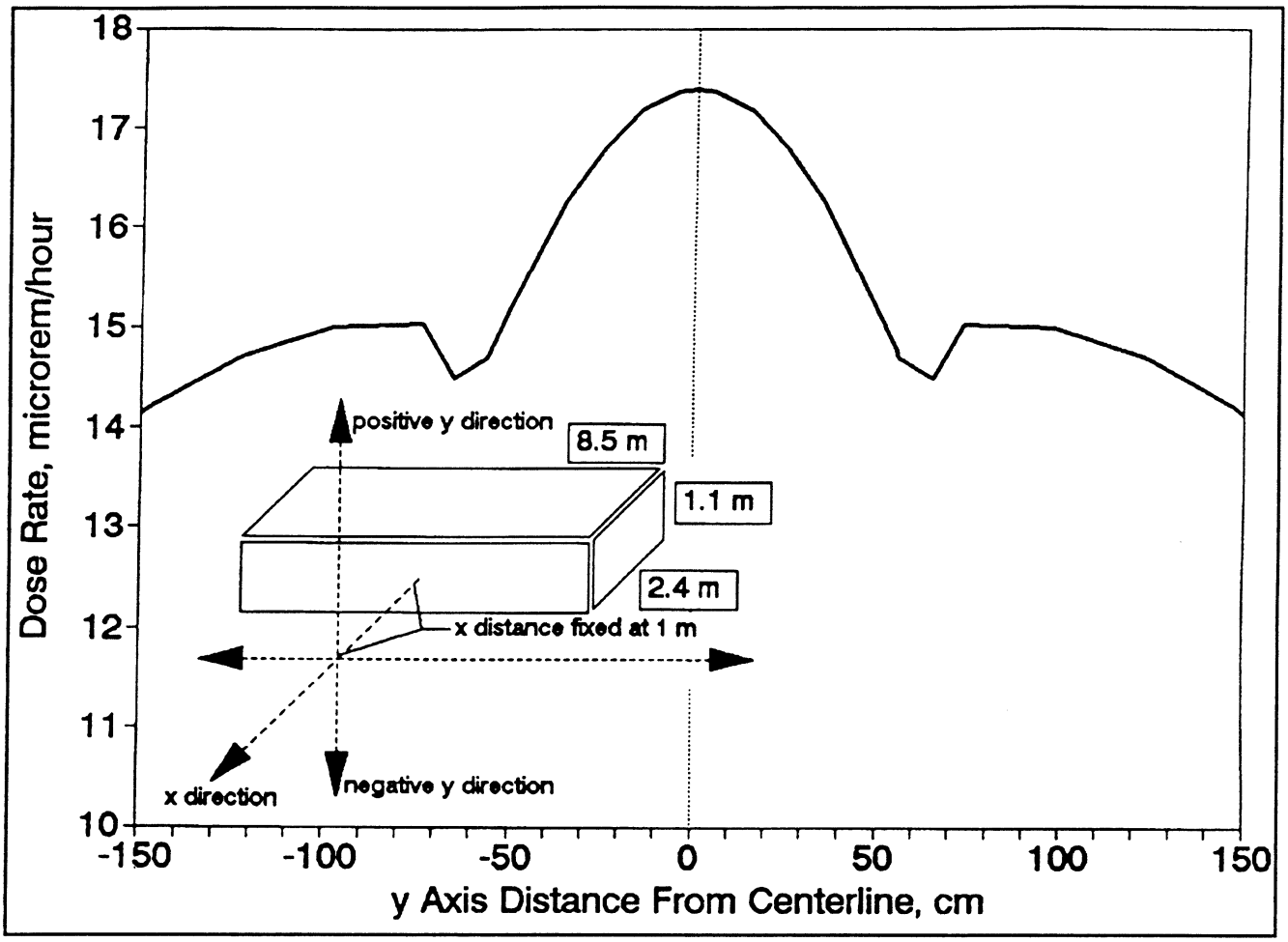


Figure 8. Dose Rates as a Function of Vertical Distance Offset from Center Point of Trailer-Type Container

BILLING CODE 7530–01–C

**Analysis of and Response to Comments on Staff Technical Position ''Disposition of Cesium-137 Contaminated Emission Control Dust and Other Incident-Related Material''**

On January 22, 1996, the Nuclear Regulatory Commission published a proposed technical position on the disposition of Cesium-137 ($^{137}Cs$) contaminated emission control dust and other incident-related materials in the **Federal Register** (61 FR 1608). Comments were solicited and, in response, 22 comment letters were received. These comment letters included: six from State nuclear safety, human resources, environmental conservation, and health offices; five from the steel industry (three from industry associations); four from hazardous waste disposal facility operators; one from a mixed-waste disposal facility operator; two from other industry associations; two from environmental groups; one from a member of the public; and one from a member of Congress. These letters raised a number of issues ranging from policy and legal concerns to specific comments on the conservatisms in the position's supporting radiological assessments. The responses to these submitted comments have been grouped into the following categories: (1) Position justification, precedence, and relationship to ''below regulatory concern'' (BRC) policy considerations and constraints; (2) regulatory approach (i.e., rulemaking versus technical position) and the implementation process; (3) legal considerations; (4) related health, safety, and environmental concerns; (5) technical considerations; (6) other issues; and (7) clarifications.

*1. Justification, Precedence, and Relationship to BRC*

a. *Comment:* The comments on the justification issue were intertwined with several other issues. Basically, however, the comments from the steel and other industries (associations), three States, the Subtitle C, hazardous waste facility operators, and the Congressman supported the disposal concept, proposed in the position, as a necessary adjunct to a regulatory program that should improve licensee control of the devices, whose inadvertent meltings have caused the problem. They believe that the position is safe, environmentally sound, and cost-effective, and a reasonable alternative to disposal at the existing mixed-waste disposal facility (available since April 1995 for disposal of the subject waste). These commenters, plus those from the disposal facility operators, expressed the view that there was a serious lack of competition in the business of disposing of mixed waste, resulting in unacceptably high disposal costs. Several of these commenters, including one State, suggested that the disposal costs could affect the financial viability of certain facilities.

Comments from two of the States, the environmental groups, the member of the public, and the mixed-waste disposal facility operator stated that the justification (or combined justification and regulatory approach) for the position was weak, with most emphasizing the conflict with the current policy on, and approach to, mixed-waste disposal. One State and the mixed-waste disposal facility operator noted that the time, effort, and resources expended to effect mixed-waste disposal at the existing facility will be undermined by the precedent being established in the position. The disposal facility operator also believed that the position relied on unsubstantiated economic assumptions and assertions, which NRC had accepted at face value without any independent investigation, and that the justification had changed with position development from a public-health to a cost-effective rationale. This commenter also stated the belief that the position was not in the public's interest because of potential exposures to transportation workers, members of the public, and Subtitle C facility workers. One of the environmental group commenters stated that saving a few cents per ton of steel may not be in the public's best interests.

a. *Response:* Because the subject disposition option was being proposed in the form of a ''permissive'' technical position (i.e., an option, likely requiring multiple approvals, that would be initiated by a request from an NRC or Agreement State licensee on a case-by-case basis) and not a rule, the broad policy justification, stated in the **Federal Register** notice (61 FR 1609, column 1) was as follows: ''NRC believes that disposal, under the provisions of the position or other acceptable alternatives (emphasis added), is preferable to allowing this mixed waste to remain indefinitely at steel company sites.'' Another acceptable alternative referred to in the **Federal Register** notice (61 FR 1610, column 3) is the mixed waste disposal facility operated by Envirocare of Utah. As the footnote indicated, this facility received authorization to accept the subject waste at concentrations not exceeding 560 picocuries (pCi)/gram (g) (20.7 becquerel (Bq)/g) during April 1995, after the work on the technical position was initiated. With the availability of this facility, the NRC staff believes its aforementioned public health justification became enmeshed with cost considerations, as described below.

Notwithstanding the availability of the mixed-waste disposal facility option, which has been used by several steel facilities with $^{137}Cs$-contaminated, incident-related material, other steel companies did not consider this option cost-effective. Contrary to the commenter's statement, NRC staff did contact the industry, as well as the mixed-waste and Subtitle C disposal facility operators, to comprehend the possible cost differentials of the disposal alternatives. Although contractual privacy and market considerations prevented exact determination, NRC staff concluded that the differential costs between the mixed-waste and Subtitle C disposal options could be significant. In fact, the comment letters from the mixed-waste disposal facility operator and the Subtitle C facility operators appear to confirm this assessment. But whatever the actual cost differences may be for specific situations, the process, as envisioned in the potential use of the position, would identify the cost differentials, if any, in the environmental assessment that would support any decision to implement the position's disposition alternative (One State commenter stated that it should be made clear that an environmental assessment, under the National Environmental Policy Act, would be required for each disposal). The significance of any cost differential could be judged by appropriate regulatory authorities, in their selection of the most reasonable and proper disposal alternative (e.g., whether saving a few cents per ton of steel is in the public interest).

In its decision to pursue what, the Commission believes, is a health-protective and environmentally sound disposition alternative, the Commission also considered the origin of the radioactive source melting problem (a problem being addressed under a separate NRC program) and the significant efforts of the steel industry to detect incoming radioactive material. In the Commission's view, these factors provided further justification for its ongoing actions. Thus, although the Commission is aware of the substantial efforts, time, and resources expended by all parties involved in the licensing of the mixed-waste disposal facility, the Commission's primary focus is to achieve ultimate disposition of the incident-related material. The Commission believes that the real or imagined cost differentials, from lack of competition or other causes, may be resolved through issuance of the position, and lead to a resolution of the disposal problem. The Commission has coordinated its actions with the U.S. Environmental Protection Agency (EPA) and believes it has the support of EPA in the position, at this proposal stage.

The potential exposures to workers and members of the public are addressed in the responses to comments 3.a. and 4.f.

b. *Comment:* Two State commenters, the mixed-waste disposal facility operator, the environmental group commenters, and the member of the public raised concerns about the precedent-setting nature of the technical position. By establishing a ''default'' value for $^{137}Cs$ in incident-related material, it was questioned why a similar argument could not be made for $^{137}Cs$ in soil, or some other radionuclide in another medium. It was further pointed out that the cumulative effect of similar actions would need to be addressed. An environmental group commenter opposed the creation of exemptions that could be used by others, specifically the Department of Energy, as applicable or relevant and appropriate requirements, in settings for which the drafters of the [position] did not intend or anticipate. The member of the public claimed a possible relationship to issues involving disposals from the U.S. Enrichment Corporation.

Commenters from the steel and other industry associations supported the position as a proper precedent, and suggested that other circumstances could justify similar actions. It was pointed out, for example, that although Basic Oxygen Furnaces (BOFs) also process scrap and are subject to the same kinds of incidents as Electric Arc Furnaces, BOF dust may be neither a listed hazardous waste nor a characteristic hazardous waste. It was suggested that the position be clarified regarding its applicability to the potential

disposal of $^{137}$Cs-contaminated BOF material and incident-related material that may not be classified as mixed waste. Another industry commenter questioned whether the position would apply to a steel producer who is not an NRC or Agreement State licensee. This same commenter questioned what approach would be used for meltings involving other radionuclides, and whether the position could not be broadened to other industries that have large volumes of mixed waste. In a broader sense, a few of these commenters applauded NRC and EPA efforts to minimize dual regulation of mixed waste.

b. *Response:* The Commission strongly believes that broad-based exemptions, or creation of specific positions outside of established policies, should be implemented through the rulemaking process. In fact, efforts to provide the technical analyses to support a broad recycle rulemaking, that would include consideration of incident-related material, are underway. However, under its specific regulations, cited in the technical position, the Commission can, and has, in case-by-case determinations, approved actions that it believes are in the best interests of public health and safety and protection of the environment. In the case of this ''permissive'' technical position, NRC is putting forward a disposition option, whose implementation and approval can be considered by applicable regulatory authorities and others. The advantages and disadvantages of alternatives would be addressed in appropriate environmental assessments that would accompany license amendment requests, and the choice would require acceptance by various regulatory authorities and others, and would be contingent on State laws and permit conditions.

The Commission believes the precedent being suggested, in this case, is reasonable and proper, based on the circumstances and the justification, as described in 1.a. above. The disposition option, however, applies only to disposals at Subtitle C facilities; only to treated (stabilized) $^{137}$Cs-contaminated, incident-related material (inclusive of material that may not be classified as mixed waste) that constitutes the greatest part of the problem; and only to companies, or their service contractors, that will treat the incident-related material, under NRC or Agreement State license, to meet the land disposal requirements that would apply if the material contained hazardous constituents. This last provision was considered necessary to avoid the difficult task of generically defining bounds on the potential radiological exposures that could occur during treatment or disposal, and could involve consideration of inhalation and ingestion, as well as direct exposure pathways.

With regard to other possible situations for which this position may be considered a precedent, such as the disposal of BOF material, the Commission believes these situations should be judged on their own merit. Any interactions among combined actions would require consideration, as one of the State commenters pointed out. The staff is also aware of EPA interests, identified in its proposed Hazardous Waste Identification Rule, and has encouraged EPA efforts to identify mixed wastes that may be regulated as low-level radioactive waste (LLRW), outside of Resource Conservation and Recovery Act (RCRA) regulations. The response to comment 2 is also pertinent to the question of developing a broader technical position. The staff has had no interactions with U.S. Enrichment Corporation issues that affected development of this position.

c. *Comment:* Several commenters either requested clarification on the relationship of this position to BRC policy or stated their belief that the position contravenes public law.

c. *Response:* In 1992, in response to the Commission's publication of a BRC policy statement in 1990, Congress, in Public Law 102–486, Energy Policy Act of 1992, stated that the [BRC] policy shall have no effect. The BRC policy basically stated the bases that the Commission would apply to determine if broad practices should be considered for exemption from regulatory control. The NRC staff does not believe that the subject technical position is a BRC policy for the following reasons: (1) The technical position is a ''permissive'' guidance statement, basically stating Commission views on safe implementation of existing regulations on licensed material disposal in 10 CFR Part 20; (2) the position specifically ''directs'' the disposal to a regulated disposal entity, and includes approval, notification, and total activity provisions that, the staff believes, are inconsistent with the concept of BRC; (3) the position is narrow in scope (i.e., directed at specific material, caused by specific circumstances); and (4) if implemented, the actions under the position are consistent with other case-by-case determinations made by the Commission.

*2. Regulatory Approach and the Implementation Process*

*Comment:* Although related to the BRC issue discussed above, a State commenter questioned why, if the proposal is sound in protecting public health and safety, the regulatory approach is a technical position, as opposed to a rulemaking—the latter providing a broader review process. Another State commenter believed NRC should define the ''life expectancy'' of the guidelines in the technical position. Industry comments generally supported the technical position as the approach needed to address a real problem in a timely manner, as opposed to a rulemaking that would be very time-consuming. They believe the steel companies should not be put in the middle of a political tug-of-war over appropriate administrative procedures to follow, given that the position has been made available for public scrutiny in a manner similar to a proposed rule.

*Response:* As referred to in 1.b. above, NRC staff intends to re-address the Subtitle C-disposal option, proposed in the technical position, in conjunction with a broad recycle rulemaking. At that time the need to broadly address disposal options will be revisited. However, because this rulemaking is in an early development stage, with finalization unlikely in the next couple of years, and because of the desirability of properly disposing of specific incident-related material in a timely manner, the Commission directed that the staff should work with EPA to develop interim guidelines and associated technical bases. This is the process that has been followed to date. The guidelines proposed in the technical position would be in effect until this rulemaking is finalized.

To address the concern of the State commenter regarding a broader review process, the staff has not only worked with EPA, but has made early versions of the position available directly to a number of affected parties and States. The Commission's intentions were openly discussed and the early versions of the position, together with early exchanges of views, were placed in NRC's public document room. The staff published the proposed technical position in its entirety in the **Federal Register** to obtain the broader review that the commenter suggests. Furthermore, contrary to interpretation of one commenter, NRC is not asserting the adoption of the technical position as a matter of Agreement State compatabilty. In fact, recognizing the likely involvement of many parties, if the position's alternative is implemented, the staff's intent was that this wide review and approval could be helpful in gaining general understanding and acceptance of the merits of the proposed alternative. Case-by-case reviews and approvals of individual applications to use the position's disposal approach will still be necessary even with the final technical position in place.

*3. Legal Considerations*

a. *Comment:* In several comment letters from the States and a Subtitle C disposal facility operator, and in staff discussions with other Subtitle C disposal facility representatives, it was pointed out that the legal applicability of the technical position's disposal alternative, in specific States, could be determined by how the incident-related material is defined. If the waste were defined as LLRW, requiring disposal as specified in the Low-Level Waste Policy Amendments Act of 1985, the disposal alternative described in the position could be precluded, absent an appropriate change to State law or regulations, or permit conditions. One State commenter stated that, if the treated incident-related material is considered contaminated ash, it would be subject to permit and manifesting requirements.

Another State commenter pointed out that State LLRW regulations require demonstration that design, operation, and closure of any class of LLRW facility ensure protection against inadvertent intrusion and provide for an institutional control period. There was concern about States being open to lawsuits if the incident-related material were considered LLRW and if the aforementioned provisions were not addressed. The mixed-waste disposal facility operator pointed out that Subtitle C facilities are not required to have radiation training programs. Another State commenter questioned the differences that would exist between the Subtitle C and mixed waste disposal facility requirements and their rationale, in the context of the position.

a. *Response:* In the ''Regulatory Position'' text in Section C, the waste that could be

transferred to the Subtitle C disposal facility was described as incident-related material, and was not referred to as low-level radioactive waste. In developing the proposed position, this was not a decision based on legal considerations, but the terminology selected to best characterize the waste, in a technical position whose principal purpose was to demonstrate, through a conservative assessment, the minimal radiological significance of the proposed disposal option. It was recognized, however, that State laws and permit conditions would need to be satisfied, and that numerous approvals may be required, including those of appropriate State regulatory bodies and the disposal facility operator.

Among other provisions, implementation of the disposal option proposed in the position: (1) Involves a licensee's request and regulatory approvals on a case-by-case basis pursuant to 10 CFR 20.2002; (2) includes notification and disposal-site operator-approval provisions; and (3) includes accounting of the single and total incident-related material received at a Subtitle C disposal site. As a result, the position does not allow a licensee to dispose of the incident-related material as if it were not radioactive, a concept that applies only to disposal of certain wastes defined in NRC regulations at 10 CFR 20.2005(a). Instead, if the provisions of the position are followed, including the specific provision for disposal at a Subtitle C facility, the position provides a basis for disposing of incident-related material at a site other than one specifically licensed for disposal of low-level radioactive waste.

Furthermore, although not taking a position on what LLW disposal requirements could be reasonably applied to the disposal of this incident-related material at a Subtitle C hazardous waste disposal facility, the staff did specifically address groundwater and intruder considerations. Groundwater and intruder assessments were provided to allow others to judge the significance of these scenarios and the need for additional regulatory provisions (including radiation protection training). NRC staff has concluded that, with the constraints provided in the position, specific regulatory actions (e.g., groundwater monitoring for $^{137}$Cs, intruder barriers, institutional controls beyond those applicable to Subtitle C disposal facilities) directed at these scenarios are not necessary.

The NRC staff has also concluded that the position's dose criterion, and the conservative assessment of allowable $^{137}$Cs concentrations, obviates the need for radiation protection training for the Subtitle C facility workers. In this regard, the staff would point out that the material defined by the technical position would not be considered radioactive, for transportation purposes, under the U.S. Department of Transportation's (DOT's) regulations. In fact, the concentration criteria in the position are a factor of about 20 less than the value used by DOT to define radioactive material.

b. *Comment:* Two State commenters pointed out that the position does not address specific permitting provisions pertaining to dust treatment to meet land disposal requirements for the dust's hazardous constituents. One of these commenters stated that NRC cannot assume sole jurisdiction for [hazardous] waste treatment, if such treatment were conducted at the steel company sites.

b. *Response:* The commenter is correct. The position calls for compliance with RCRA land disposal requirements. In the situations being addressed, the NRC staff believes appropriate RCRA authorities may approve various options for carrying out the treatment of the incident-related material. Therefore, only a general statement of compliance was included in the technical position. The staff acknowledges and agrees with the comment regarding NRC's jurisdiction over hazardous waste treatment, no matter where conducted. This would be an issue for the State-permitting agencies or EPA to decide. In essence, the presumption in the position is that the Subtitle C *disposal* facility would be disposing of waste that had been treated under applicable RCRA requirements.

*4. Related Safety, Health, and Environmental Concerns*

a. *Comment:* An environmental group, a State commenter, and the member of the public suggested that the best approach to solve the problem is a better accounting of the sources causing the incidents, and more rigorous regulation appears warranted. The suggestion was made that worker exposure at the foundries should be a principal NRC concern. As indicated in the discussion in comment 1.a., the steel industry commenters also strongly requested NRC action to improve accountability.

a. *Response:* The Commission, in its directions to the staff on October 18, 1994, approved several concurrent courses of action. One of these has led to the development of the proposed position, while another has led to an Agreement State-NRC Working Group that is developing recommendations to address the accountability issue. The Working Group has held several meetings and a workshop, and recommendations were sent to the Commission in late 1996. The NRC staff is in the process of evaluating the NRC/Agreement States Working Group's recommendations for increased control over, and accountability for, devices containing radioactive material. Once the NRC staff completes its evaluation, it will submit an action plan to the Commission outlining measures to improve control over, and accountability for, devices. Thus, the Commission agrees with the commenter's worker safety and ''front-end'' concerns but, recognizing that incident-related material currently exists, and future incidents may not be prevented with 100 percent confidence, believes the ''back end'' of the problem also requires Commission action.

b. *Comment:* A State and an environmental group commenter viewed the policy, in its granting of a ''regulatory exemption'' for the incident-related waste, as counterproductive to the desire to improve detection capabilities at the steel facilities. Three industry commenters, one who responded directly to the State view, pointed out that the steel company facilities have installed state-of-the-art radiation-detection capabilities at considerable expense, not to meet any regulatory requirement, but to reduce the likelihood of experiencing the consequences of inadvertent-melting events that result in significant shutdown, cleanup, and disposal costs, as well as the possibility of incident-related exposures to plant personnel. Furthermore, these detection systems have been coupled with comprehensive scrap inspection programs.

b. *Response:* Although the policy provisions may require NRC or appropriate Agreement States to not require licensing of the Subtitle C facility for the radioactive material, the main feature of the policy is the NRC determination that the incident-related material can be transferred, under existing regulations (10 CFR 20.2001 and 20.2002), from a licensed to an unlicensed entity. The position not only provides a conservative NRC assessment of the radiological impacts of the disposal alternative, but also evaluates certain hypothetical situations to provide a frame of reference for the calculated impacts. Contrary to the connotation, ''regulatory exemption,'' used by the commenters, NRC staff does not consider the proposed position to be an exemption action, but an assessment that could allow case-by-case decisions on incident-related material disposals under current regulations (also see response 1.c.).

The staff also believes that this policy has no impact on a steel company's selection of ''source'' detection capabilities. The costs associated with shutdown (downtime) and cleanup alone can exceed millions of dollars, far in excess of the costs of effective detection systems and programs.

c. *Comment:* The environmental group commenters and the mixed-waste disposal facility operator suggested that the position could lead the steel companies to continue operations after a melting for the purpose of generating additional contaminated dust in sufficient volume to meet the position's concentration criteria. A State commenter stated that this issue should be addressed. The mixed-waste disposal facility operator postulated other abuses (e.g., the mixing of other regulated waste with [incident-related] material) and asked whether prevention measures were being proposed.

c. *Response:* The staff believes that the cost disincentives alone are sufficient to consider the former suggestion unreasonable. For example, the dilution necessary at one of the facilities with this material, such that all the contaminated material would comply with the position's criteria, would be about a factor of 5. The costs of disposing of this increased volume at a Subtitle C facility, even with an optimistic estimate of disposal costs, could reach millions of dollars. The staff would note that its development of this position has been enmeshed with cost-effective considerations because of the real or imagined excessive differential costs of the disposal alternatives. Furthermore, based on the operation of the steel facilities' emission control systems, with their dust-collection systems, the staff can not conceive of a scenario that would allow real time comprehension of the extent of the contamination or total quantity of $^{137}$Cs involved in an incident.

With regard to the question of protective measures, the staff believes the NRC, Agreement State(s), permitting agencies, or the Subtitle C disposal facility operator could, if warranted, require or strongly recommend testing requirements to address any concerns on disposal of unauthorized radioactive material. The NRC staff believes that a licensee's measurement and sampling program, as approved by NRC or the Agreement State, will be sufficient to preclude unauthorized radioactive material disposals.

d. *Comment:* An environmental group commenter stated that the concentration criteria in the position appear to be inconsistent and less strict than criteria imposed by EPA on mill tailings at 40 CFR Part 192. The mixed-waste disposal facility commenter questioned the position's comparisons with environmental $^{137}$Cs concentrations. The member of the public claimed the proposal would exempt 10 times the amount of material that would have been exempted under the BRC policy.

d. *Response:* The staff presumes that reference is being made to the 5 and 15 pCi/g or 135 and 405 Bq/g remedial action criterion for radium=226 ($^{226}$Ra) in soil. These are criteria that would apply to soil that could be released for unrestricted use. The concentrations in the position are those for material that would be disposed of at a hazardous waste disposal facility. Because radium is about 2.5 times more hazardous from a direct exposure standpoint than $^{137}$Cs, the position's bounding $^{137}$Cs values for Subtitle C facility disposal are only about 3 to 4 times a value that would be found acceptable for *unrestricted release.* In fact, the typical incident-related material at under 20 pCi/g (540 Bq/g) would be within the criteria range cited and applicable to *unrestricted release* situations. Note also that the position contains a total-quantity criterion which is not a part of the 40 CFR Part 192 regulations.

The comparison referred to by the mixed-waste disposal facility commenter was between ''much of the mixed waste'' that contains concentrations below 20 pCi/g (540 Bq/g). This concentration was being compared with actual environmentally measured concentrations of 11 and 12 pCi/g (6300 Bq/g) and statistically-predicted concentrations (95 percent value of distribution) up to 19 pCi/g (513 Bq/g). The reference in footnote 13 of the final technical position is the source of these values.

The staff was not certain about the intended context of the comment from the member of the public, but has presumed it is related to other issues addressed in the response to this comment, comment 1.a., 4.e., or 4.f..

e. *Comment:* The mixed-waste disposal facility operator, among others, suggested that the position, if adopted, may have adverse health, safety, and environmental consequences. One issue involved the disposition of higher-activity material that would not be covered by the position's criteria. The commenter cites an example where the $^{137}$Cs concentration, if averaged over all the incident-related material, could be 551 pCi/g (14,900 Bq/g)—[below the acceptance criteria at the mixed waste facility]. If the material with concentrations below the position's values is disposed of under the position's provisions, the commenter asks what would be the disposition of the higher concentration material and, if it remains onsite, would this violate NRC's intent in promulgating the position.

In a somewhat related comment, a State questioned whether material delisted from hazardous material regulations, and meeting the concentration values in the position, could be disposed of at a Subtitle D facility.

e. *Response:* For incident-related material remaining after ''position-allowed-'' and economically feasible blending of contaminated material, the staff is aware of only one disposition option at this time (see 61 FR 1616, column 2). That option would involve treatment and delisting of the material under hazardous material regulations, and disposal of the material as LLW. In two situations where incident-related material existed or currently exists at steel facilities, about 90 percent of the activity was contained in a few percent of the material volume. Given that, in many cases, it may not be feasible to blend the $^{137}$Cs in this small volume to concentrations acceptable at either the mixed waste or the Subtitle C facility (under the provisions of the position), treatment and delisting of this small volume may not be onerous. In any event, the staff does not believe the uncertainty or current feasibility of addressing a small percentage of the problem affects the merits of the position, especially as it relates to the mixed-waste or Subtitle C disposal alternatives.

In response to the State query, the position does not justify disposal at a Subtitle D sanitary waste landfill because the radiological assessment was based on a Subtitle C facility disposal. Any such disposal, if justified, would have to address the differences, if any, between facilities and their operations.

f. *Comment:* A series of comments from the mixed-waste disposal facility operator questioned NRC's appreciation of the potential effects of exposure to low levels of radiation. On the other hand, most other commenters either considered the regulatory basis for the position of 1 mrem (10 microsievert (μSv)) per year (yr) to be reasonable or very conservative. Among several comments, one commenter suggested a modest increase in the position's dose basis from 1 mrem (10 μSv)/yr to 4 mrem (40 μSv)/yr, corresponding to the value in EPA drinking water standards.

f. *Response:* For a number of years, the Commission has used the linear no-threshold hypothesis as providing a reasonable and prudent basis to assess the radiological risk associated with its actions. In essence, this hypothesis involves an extrapolation of the statistically significant health effects that can be attributed to high-level, short-duration exposures (e.g., the Japanese atomic bomb survivors) to levels of exposure at or below what the earth's population receives from background sources (e.g., cosmic radiation and exposure to radiation emanating from naturally occurring materials). Notwithstanding the scientific controversy regarding the reality of these hypothetical risks, the Commission's radiation protection standards are consistent with standards, recommended by international and national advisory bodies, that reflect this hypothesis.

In the case of the technical position, a dose rate of 1 mrem/yr (one-hundredth of the public dose limit and about one three-hundredth of the average exposure rate received year in and year out by the population of the United States) was chosen as the regulatory basis, because, in the staff's view, it was suitably conservative and, from a practical standpoint, provided a disposition solution for most of the incident-related material currently existing at steel company sites. Footnote 5 of the final technical position reflected this view.

With respect to the mixed waste disposal facility operator's comments on the NRC staff's appreciation of the effects of low-level radiation and the 1 mrem/yr (10 μSv/yr) regulatory basis, the staff believes that the conservatisms in its selection of a dose criterion, with appropriate regulatory margins, can be appropriate, if the resulting position can lead to resolution of an outstanding incident-related waste disposition problem. Although selection of 4 mrem (40 μSv)/yr could be justified, staff's view is that selecting a drinking water standard for this position, which staff believes does not present a drinking water issue, would create more concern and confusion than the value selected, and its associated basis.

*5. Technical Considerations*

a. *Comment:* A State commenter suggested that the position should specify acceptable methods for averaging the waste within a container.

a. *Response:* The staff recognizes that the incident-related material in a particular container may not be homogeneous in terms of $^{137}$Cs concentration. However, because the principal radiological hazard being addressed is related to direct exposure, complying with the concentration values, as determined on a container average basis, is acceptable. The specifics of the characterization program directed at defining treated-material ($^{137}$Cs concentrations) would be defined when approving the licensee's request for transfer of the incident-related material. The characteristics of the treated material, the decision to pursue packaged or unpackaged disposal, the statistical confidence desired, the regulatory margins provided in the position, and the views of the approving parties would need to be considered. The response to comment 7.c. could also be applicable in determining a characterization program.

b. *Comment:* The mixed waste facility operator noted that if one considered exposure to a plane source of 60 μrem (0.6 μSv) per hour for 8 hours per day for over 4 weeks, the result would be a total exposure exceeding EPA's maximum allowable dose. An industry association commenter noted that the dose rate limit applied to shipments of radioactive material is a factor 500 times higher than the value applied in the position to packaged disposal.

b. *Response:* The staff does not believe this calculation is pertinent. Although the staff is not certain what maximum allowable dose is being referred to, the critical point in the calculation is that it presumes continuous exposure at 1 meter (~3 feet) to a plane of material that is all at the maximum concentration criterion. As a point of reference, exposure to ''normal'' dust could be calculated to cause an exposure that would be a factor of 65 or lower, or presuming the possibility of greater exposure periods associated with the greater volumes of material, equivalent exposure would be reached over a period of about 5 years. The need to consider the applicable exposure scenario on which a regulatory position is based is brought out by the industry association commenter. To make this point, the staff would note that under similar assumptions, DOT's allowable exposure rate of 10 mrem (0.1 mSv) per hour at 1 meter (~3 feet) could be translated into a dose estimate of 1.6 rem (16 mSv).

c. *Comment:* An industrial association commenter suggested that the 1-curie (Ci) or $3.7\times10^{4}$ MBecquerel (MBq) total activity limit be modified to a per disposal cell basis (i.e., if the cell were larger than 100,000 cubic meters ($3.5\times10^{6}$ $ft^{3}$)), on the grounds that the proposed constraint may be too limiting if one facility would accept the incident-related material from more than a single event.

c. *Response:* Although this change could be justified, it has not been accepted for the following reasons: (1) The procedural difficulties for the NRC or Agreement State to require a particular disposal constraint at an unlicensed facility, and (2) the belief that individual incident disposals under the position's provisions are, in most cases, unlikely to approach the quantity constraint (one-tenth is expected to be more typical).

d. *Comment:* An industrial association commenter suggested that the area/shape factors used by NRC were overly restrictive by a factor of 2. d.

d. *Response:* NRC became aware of area/shape factor differences between different codes. Staff has checked its calculations and does not believe its estimates are in error.

e. *Comment:* A State commenter questioned whether a discrepancy existed in NRC's source term assumption, in that dividing a 1–Ci ($3.7\times10^{4}$ MBq) source over 2000 tons (1814 metric tons) of contaminated material would result in an average concentration of 551 pCi/g ($1.49\times10^{4}$ Bq/g).

e. *Response:* The commenter's calculation is correct. However, in actual events, a significant fraction of the activity is generally contained in a small volume of incident-related material at high concentrations. As discussed in the response to comment 4.e., the disposition of this material will likely require treatment of its hazardous properties, so that the material can be delisted and disposed of at a licensed LLRW disposal facility. Although the position's provisions do allow blending of contaminated material, NRC staff recognized that providing the required reduction in average concentration to meet the position's concentration criteria would likely not be practical in all cases. Staff believed this was reflected in the proposed position (e.g., see ''Introduction'' (61 FR 1609, column 3) and ''Discussion'' (61 FR 1610, columns 2 and 3)). This reality is why the activity that could be disposed of at the Subtitle C facility, for the specific events that have taken place to date, is unlikely to exceed 100 mCi ($3.7\times10^{3}$ MBq).

f. *Comment:* A State commenter raised several questions about the groundwater modeling and the input parameters.

f. *Response:* The commenter noted that these comments applied to an earlier version of the position; however, a few still have relevance to the proposed version. In the context of this position, the staff was faced with the task of bounding a specific potential radiological impact, that staff believed was relegated to a status of insignificance by the position's defined concentration and quantity criteria. Nevertheless, the approach taken in the position was to perform simple bounding analyses and comparisons, so as to provide a perspective on the specific hazard. For example, in staff's view, a very conservative dose estimate was provided under the hypothesis that an individual could and would drink trench leachate. Contrary to the commenter's apparent view, staff considers the very conservatively calculated 7-mrem (70-µSv) dose from directly drinking trench leachate, with a bounding concentration of radioactive material, to be a *prima facie* rationale for claiming that EPA's drinking water standards would be met with significant margin, not only at the ''tap,'' but at any point in the groundwater.

*6. Other Issues*

*Comment:* A State commenter suggested that the position should state whether NRC [would] allow import or export of incident-related material for disposal.

*Response:* The position did not address the import/export issue. To the extent that the position's assumptions remain valid, the technical basis could be applied to export. However, any imports or exports could involve decisions by responsible parties, beyond NRC, including non-U.S. regulatory authorities. To the extent that appropriate U.S. regulatory authorities agree, and determine that they can legally support NRC's views that the treated incident-related material is not LLRW, the material could be considered for disposal under the provisions of the position, giving consideration to its hazardous properties, if applicable. The staff does not believe this issue needs to be addressed in the context of the position itself.

*7. Clarifications*

a. *Comment:* A State commenter stated that the licensee transferring the treated incident-related material should notify the Agreement State Program or, in the case where an Agreement State Program does not exist, the appropriate solid or hazardous waste regulatory authority.

a. *Response:* The position's provisions are intended to ensure such notifications. In the case of Agreement States, their approval of the transfer is called for in the position's provisions, as is written notification from the licensee at least 30 days before any actual transfer. The position also calls for disposal facility operator notification and acceptance, in writing. Thus, there are two avenues through which the solid or hazardous waste regulatory authorities would likely be apprised of actions to implement the position. In non-Agreement States, NRC would be the initial, but possibly not the only, radiological approving authority. In these cases, State-permitting authorities may seek the advice and approval of their respective State radiological or public health organizations. NRC would work with these authorities and others to determine if implementing the position's disposition alternative is reasonable and prudent, and legally acceptable.

b. *Comment:* In the comments from one State, there appeared to be some confusion on what entity would track the total quantity constraint (i.e., 1 Ci or $3.7\times10^{4}$ MBq).

b. *Response:* Under the position's provisions, the total quantity constraint would be tracked by NRC or the appropriate Agreement State, although others could also track this inventory value.

c. *Comment:* A State commenter queried who would confirm that the position's concentration constraints were being met. An environmental group commenter suggested that accurate characterization presents a considerable challenge.

c. *Response:* In the staff's view, NRC or the appropriate Agreement State would have a significant incentive to provide some independent verification of the concentration criteria. However, the specifics of this verification would be addressed when approving the licensee's request to make the transfer of incident-related material under the provisions of the position. Other parties, including the Subtitle C facility operator and the permitting agency, whose approvals are required, could also dictate a specific confirmation process. On this point, the staff would note the inclusion of regulatory margins in the position that, staff believes, should be considered in developing a reasonable confirmation program.

d. *Comment:* An industry association commenter requested clarification regarding the shipment of pretreated incident-related material to offsite licensed treatment facilities.

d. *Response:* Under the provisions of the position, NRC would have no objection to incident-related material being transferred offsite for permitted treatment by an NRC or Agreement State licensed entity. The position only addresses the transfer of incident-related material that has been properly treated, under a Commission or Agreement State license, to a Subtitle C disposal facility.

e. *Comment:* An industry group commenter suggested that the position should provide allowance for licensed service contractors to be brought in to supervise implementation operations. It was further suggested that treatment should not be a prior condition to transport.

e. *Response:* The position, and NRC regulations, allow the possibility of service contractors operating under the contracting entity's license. Treatment is only required before transport to an unlicensed Subtitle C disposal facility. See the response to comment 7.d. above.

f. *Comment:* An industrial association commenter questioned the accuracy of the

dose rates associated with the 55-gallon drum.

f. *Response:* The publication of the figures in the **Federal Register** caused some blurring that has caused the commenter to misread the indicated dose rate. Comparisons with the scale on the ordinate indicate that the commenter's figure is high by a factor of 10.

Dated at Rockville, Maryland, this 13th day of March, 1997.

For the U.S. Nuclear Regulatory Commission

**John W. N. Hickey,**

*Chief, Low-Level Waste and Decommissioning Projects Branch, Division of Waste Management, Office of Nuclear Material Safety and Safeguards.*

[FR Doc. 97–6884 Filed 3–18–97; 8:45 am]

BILLING CODE 7590–01–P

## Individual Plant Examination Program: Perspectives on Reactor Safety and Plant Performance Volume 1, Part 1 and Volume 2, Parts 2–5, Draft

**AGENCY:** Nuclear Regulatory Commission.

**ACTION:** Notice of Workshop Agenda for Draft NUREG–1560.

**SUMMARY:** The Nuclear Regulatory Commission has published a draft of ''Individual Plant Examination Program: Perspectives on Reactor Safety and Plant Performance,'' NUREG–1560, Volumes 1 and 2. Volume 1, Part 1 is a summary report from a review of the Individual Plant Examinations (IPE) submitted to the agency in response to Generic Letter 88–20. Volume 2, Part 2–5 provides an in-depth discussion of the insights and findings summarized in Volume 1, Part 1. The NRC staff will conduct a public workshop (April 7, 8, 9, 1997) to discuss the contents of the draft NUREG and to solicit comments (See FR notices 61 FR 58429 and 61 FR 65248). The agenda of the workshop is listed in this notice.

**WORKSHOP MEETING INFORMATION:** A 3-day workshop will be held to address comments and answer questions.

**DATES:** April 7, 8, 9, 1997.

**LOCATION:** Austin, Texas.

**HOTEL:** Hyatt Regency, 208 Barton Springs Rd., Austin, Texas, 78704. Please make your reservations directly with the Hyatt Regency Hotel, phone (512) 477–1234 (or 1 800 233–1234). Mention that you will be attending the NRC–IPE Workshop to receive the meeting group rate of $113/night plus tax (single/double). Hotel reservations by March 7, 1997 are required in order to receive the group rate (subject to availability).

**REGISTRATION:** The workshop registration fee is $100 USD. Registration fee is payable by check or money orders drawn on U.S. banks payable to Sandia National Laboratories; no credit cards accepted. Mail registration fees to Martha Lucero, Sandia National Laboratories, PO Box 5800, MS 0129, Albuquerque, New Mexico 87185–0129. Please include name, organization, address and phone number with your registration fee. Registration fee includes reception, daily continental breakfast, and one lunch. Late registration fee ($100) is due no later than the time of workshop/meeting registration (cash is accepted for late registration payment at workshop).

**Workshop Agenda**

*Sunday*

3:00 pm to 7:00 pm
Registration
6:00 pm to 9:00 pm
Reception

*Monday*

Time and Topic

7:00 am to 5:00 pm
Registration/information
8:00 am to 8:30 am
Opening remarks (NRC staff)
8:30 am to 8:45 am
Introduction, Roadmap for meeting (Chapter 1)
8:45 am to 9:15 am
Perspectives on impact of IPE program on reactor safety* (Chapters 2 and 9)
9:15 am to 10:25 am
Perspective on Reactor Design* (Chapters 3, 10 and 11)
10:25 am to 10:40 am
BREAK
10:40 am to 11:50 am
Perspectives on Containment Design* (Chapters 4, 10, and 12)
11:50 am to 1:20 pm
LUNCH (part of registration fee), also key-note speech by Joseph Callan, EDO
1:20 pm to 2:00 pm
Operational perspectives* (Chapters 5 and 13)
2:00 pm to 3:00 pm
Perspectives on IPEs with respect to risk-informed regulation* (Chapters 6, 14 and 15)
3:00 pm to 3:15 pm
BREAK
3:15 pm to 4:00 pm
Perspectives on IPEs with respect to Commission's Safety Goals and impact of Station Blackout rule on CDFs* (Chapters 7, 16 and 17)
4:00 pm to 5:00 pm
Open discussion
5:00 pm
Adjourn
5:30 pm to 6:30 pm
IPE Database demonstration, Part 1 (Basic Queries: Basic structures of the user friendly program including examples of general queries)

*Each ''presentation'' is comprised of:
(1) NRC presentation of overview of perspectives and staff's interpretation of comments received and staff's response.
(2) Open time for questions and comments.

*Tuesday*

Time and Topic

7:45 am to 5:00 pm
registration/information
8:10 am to 8:15 am
Introductory remarks (NRC)
8:15 am to 9:15 am
Presentation by Wolfgang Werner on insights from PRAs of European nuclear power plants*
9:15 am to 10:15 am
Presentation by Westinghouse Owner's Group*
10:15 am to 10:30 am
BREAK
10:30 am to 11:30 am
Presentation by CE Owner's Group*
11:30 am to 1:00 pm
LUNCH
1:00 pm to 2:00 pm
Presentation by B&W Owner's Group*
2:00 pm to 3:00 pm
Presentation by BWR Owner's Group*
3:00 pm to 3:15 pm
BREAK
3:15 pm to 3:45 pm
Presentation by Northeast Utilities*
3:45 pm to 5:00 pm
Open Discussion
5:00 pm
Adjourn
5:30 pm to 6:30 pm
IPE Database demonstration, Part 2 (Advanced queries: use of ACCESS to query the database, program setup and discussion)

*Includes time for questions and answers.

*Wednesday*

Time and Topic

8:15 am to 3:00 pm
Registration/information
8:30 am to 8:35 am
Introductory remarks (NRC)
8:35 am to 9:35 am
Presentation by NEI*
9:35 am to 10:00 am
NRC presentation on NRC Potential Regulatory Follow-up Activities
10:00 am to 10:15 am
BREAK
10:15 am to 11:30 pm
Open discussion on NRC Potential Regulatory Follow-up activities
11:30 am to 1:00 pm
LUNCH
1:00 pm to 3:00 pm
Wrap-up Discussion (NRC and public) on NUREG–1560 covering such issues as:
- Validity and accuracy of NUREG information, conclusions and observations
- Future NRC activities
- Future industry activities

3:00 pm
Adjourn

*Includes time for questions and answers.

**SUPPLEMENTARY INFORMATION:** Draft NUREG–1560 (Volume 1, Part 1 and Volume 2, Parts 2–5) is available for inspection and copying for a fee at the NRC Public Document Room, 2120 L