added in their place in the following places:

i. Paragraph (a), both times they appear;

ii. Paragraph (b), under subheading ''PETITION FOR DETERMINATION OF NONREGULATED STATUS'';

iii. Paragraphs (d)(1), (d)(2), and (d)(3).

c. In paragraph (a), remove the words ''Director, Biotechnology, Biologics, and Environmental Protection (BBEP),'' and add in their place the word ''Administrator''.

d. In paragraph (b), remove the words ''Biotechnology, Biologics, and Environmental Protection'' and add in their place the words ''Plant Protection and Quarantine, Biotechnology and Scientific Services''.

e. In paragraph (c)(4), remove the word ''Director'' and add the word ''Administrator'' in its place.

f. In paragraph (d)(1), remove the words ''The BBEP'' and add in their place the word ''APHIS''.

g. In the undesignated paragraph following paragraph (d)(3)(ii), remove the word ''Director's'' and add the word ''Administrator's'' in its place, and remove the word ''BBEP'' and add the word ''APHIS'' in its place.

h. In newly redesignated paragraph (f)(1), remove the word ''Director's'' and add the word ''Administrator's'' in its place.

§ 340.6 Petition for determination of nonregulated status.[11]

* * * * *

(c) * * *

(5) Field test reports for all trials conducted under permit or notification procedures, involving the regulated article, that were submitted prior to submission of a petition for determination of nonregulated status or prior to submission of a request for extension of a determination of nonregulated status under paragraph (e) of this part. Field test reports shall include the APHIS reference number, methods of observation, resulting data, and analysis regarding all deleterious effects on plants, nontarget organisms, or the environment.

* * * * *

(e) *Extensions to determinations of nonregulated status.*

(1) The Administrator may determine that a regulated article does not pose a potential for plant pest risk, and should therefore not be regulated under this part, based on the similarity of that organism to an antecedent organism.

(2) A person may request that APHIS extend a determination of nonregulated status to other organisms. Such a request shall include information to establish the similarity of the antecedent organism and the regulated articles in question.

(3) APHIS will announce in the **Federal Register** all preliminary decisions to extend determinations of nonregulated status 30 days before the decisions become final and effective. If additional information becomes available that APHIS believes justifies changing its decision, it will issue a revised decision.

(4) If a request to APHIS to extend a determination of nonregulated status under this part is denied, APHIS will inform the submitter of that request of the reasons for denial. The submitter may submit a modified request or a separate petition for determination of nonregulated status without prejudice.

* * * * *

§ 340.7 [Amended]

9. In § 340.7, paragraph (b), the introductory text, remove the words ''Biotechnology, Biologics, and Environmental Protection'' and add in their place the word ''APHIS''.

Done in Washington, DC, this 28th day of April 1997.

Donald W. Luchsinger,

Acting Administrator, Animal and Plant Health Inspection Service.

[FR Doc. 97–11359 Filed 5–1–97; 8:45 am]

BILLING CODE 3410–34–P

[11] *See* footnote 5 in § 340.3.

DEPARTMENT OF AGRICULTURE

Rural Utilities Service

7 CFR Part 1755

RUS Standard for Acceptance Tests and Measurements of Telecommunications Plant

AGENCY: Rural Utilities Service, USDA.

ACTION: Final rule.

SUMMARY: The Rural Utilities Service (RUS) amends its regulations on Telecommunications Standards and Specifications for Materials, Equipment and Construction, by rescinding RUS Bulletin 345–63, RUS Standard for Acceptance Tests and Measurements of Telephone Plant, PC–4, and codifying the revised RUS standard at 7 CFR 1755.400 through 7 CFR 1755.407, in the Code of Federal Regulations. The revised standard: Updates the acceptance tests and measurements for copper conductor telecommunications plant; includes a section on acceptance tests and measurements for fiber optic cable plant; includes a section on acceptance tests and measurements for voiceband data transmission; and includes a shield or armor ground resistance test to determine outer jacket cable damage.

DATES: Effective date: June 2, 1997.

Incorporation by reference: Incorporation by reference of certain publications listed in this final rule is approved by the Director of the Federal Register as of June 2, 1997.

FOR FURTHER INFORMATION CONTACT: Charlie I. Harper, Jr., Chief, Outside Plant Branch, Telecommunications Standards Division, Rural Utilities Service, room 2837, STOP 1598, South Building, U.S. Department of Agriculture, Washington, DC 20250–1598, telephone number (202) 720–0667.

SUPPLEMENTARY INFORMATION:

Executive Order 12866

This final rule has been determined to be not significant and therefore has not been reviewed by the Office of Management and Budget.

Executive Order 12988

This final rule has been reviewed under Executive Order 12988, Civil Justice Reform. RUS has determined that this final rule meets the applicable standards provided in section 3 of that Executive Order.

Regulatory Flexibility Act Certification

The Administrator of RUS has determined that this final rule will not have a significant economic impact on a substantial number of small entities, as defined by the Regulatory Flexibility Act (5 U.S.C. 601 *et seq.*). This final rule involves standards and specifications, which may increase the direct short-term costs to RUS borrowers. However, the long-term direct economic costs are reduced through greater durability and lower maintenance cost over time.

Information Collection and Recordkeeping Requirements

The reporting and recordkeeping requirements contained in the final rule were approved by the Office of Management and Budget (OMB) pursuant to the Paperwork Reduction Act of 1995 (44 U.S.C. Chapter 35, as amended) under control number 0572–0059.

Send questions or comments regarding this burden or any aspect of these collections of information, including suggestions for reducing the burden, to F. Lamont Heppe, Jr., Director, Program Support and Regulatory Analysis, Rural Utilities Service, U.S. Department of Agriculture,

Stop 1522, Washington, DC 20250–1522, Fax: (202) 720–4120.

National Environmental Policy Act Certification

The Administrator of RUS has determined that this final rule will not significantly affect the quality of the human environment as defined by the National Environmental Policy Act of 1969 (42 U.S.C. 4321 *et seq.*) Therefore, this action does not require an environmental impact statement or assessment.

Catalog of Federal Domestic Assistance

The program described by this final rule is listed in the Catalog of Federal Domestic Assistance programs under No. 10.851, Rural Telephone Loans and Loan Guarantees; and No. 10.852, Rural Telephone Bank Loans. This catalog is available on a subscription basis from the Superintendent of Documents, the United States Government Printing Office, Washington, DC 20402.

Executive Order 12372

This final rule is excluded from the scope of Executive Order 12372, Intergovernmental Consultation, which may require consultation with State and local officials. A Notice of Final rule titled Department Programs and Activities Excluded from Executive Order 12372 (50 FR 47034) exempts RUS and RTB loans and loan guarantees, and RTB bank loans, to governmental and nongovernmental entities from coverage under this Order.

Background

RUS issues publications titled ''Bulletin'' which serve to guide borrowers regarding already codified policy, procedures, and requirements needed to manage loans, loan guarantee programs, and the security instruments which provide for and secure RUS financing. RUS issues standards and specifications for the construction of telephone facilities financed with RUS Loan Funds. RUS is rescinding Bulletin 345–63, ''RUS Standard for Acceptance Tests and Measurements of Telephone Plant, PC–4,'' and to codifying this standard in 7 CFR 1755.400 through 7 CFR 1755.407, RUS Standard for Acceptance Tests and Measurements of Telecommunications Plant.

This standard is used to determine the acceptability of installed telecommunications plant. The current standard with regard to copper cable plant acceptance tests and measurements has become outdated as a result of technological advancements made in copper cable plant acceptance test methods during the past fourteen years. Therefore to assure RUS borrowers that their installed copper cable plant is of the highest quality, the revised standard will update acceptance test and measurement methods for copper cable plant.

There is currently a need to include into the standard a section dealing with standardized test methods and measurements for installed fiber optic cable plant. Presently acceptance test methods and measurements for fiber optic cable plant are developed by each consulting engineer resulting in a variety of test methods and measurements which in turn results in higher construction costs to RUS borrowers. By providing standardized acceptance test methods and measurements for fiber optic cable plant, RUS will be assisting its borrowers by decreasing their construction costs for fiber optic cable installation.

There is currently a need to include into the standard a section dealing with standardized test methods and measurements for voiceband data transmission. Because RUS borrowers are increasing their usage of modems to transmit data over telecommunications transmission facilities, standardized test methods and measurements are needed to ensure that the transmission facilities are acceptable for data transmission.

There is presently a need to include into the current standard a standardized shield or armor ground resistance test method and a minimum requirement to determine when the outer cable jacket is damaged as a result of the installation procedures. This standard test method and minimum requirement will result in cost savings to RUS borrowers because the variety of test methods and minimum requirements presently being used by consulting engineers and contractors will be eliminated.

This action establishes RUS standardized acceptance test methods and measurements to determine acceptability of installed telecommunications plant. These standardized acceptance test methods and measurements will afford RUS telephone borrowers an economical and efficient means of reducing their construction costs.

On August 28, 1996, RUS published a proposed rule (61 FR 44195) to rescind RUS Bulletin 345–63, RUS Standard for Acceptance Tests and Measurements of Telephone Plant, PC–4, and to codify the revised RUS Standard for Acceptance Tests and Measurements of Telecommunications Plant in 7 CFR 1755.400 through 7 CFR 1755.407. Comments on this proposed rule were due October 28, 1996. No comments were received by this due date.

List of Subjects in 7 CFR Part 1755

Incorporation by reference, Loan programs—communications, Reporting and recordkeeping requirements, Rural areas, Telephone.

For the reasons set out in the preamble, RUS amends chapter XVII of title 7 of the Code of Federal Regulations as follows:

Part 1755—Telecommunications Standards and Specifications for Materials, Equipment and Construction

1. The authority citation for part 1755 continues to read as follows:

Authority: 7 U.S.C. 901 *et seq.*, 1921 *et seq.*, 6941 *et seq.*

§ 1755.97 [Amended]

2. Section 1755.97 is amended by removing the entry RUS Bulletin 345–63 from the table.

3. Section 1755.98 is amended by adding the entry 1755.400 through 1755.407 to the table in numerical order to read as follows:

§ 1755.98 List of telephone standards and specifications included in other 7 CFR parts.

* * * * *

Section	Issue date	Title
* *	* * *	* *
1755.400 through 1755.407	[Effective date of final rule]	RUS Standard for Acceptance Tests and Measurements of Telecommunications Plant.
* *	* * *	* *

4. Sections 1755.400 through 1755.407 are added to read as follows:

§ 1755.400 RUS standard for acceptance tests and measurements of telecommunications plant.

Sections 1755.400 through 1755.407 cover the requirements for acceptance tests and measurements on installed copper and fiber optic telecommunications plant and equipment.

§ 1755.401 Scope.

(a) Acceptance tests outlined in §§ 1755.400 through 1755.407 are applicable to plant constructed by contract or force account. This testing standard provides for the following:

(1) Specific types of tests or measurements for the different types of telecommunications plant and equipment;

(2) The method of measurement and types of measuring equipment;

(3) The expected results and tolerances permitted to meet the acceptable standards and objectives;

(4) Suggested formats for recording the results of the measurements and tests; and

(5) Some probable causes of nonconformance and methods for corrective action, where possible.

(b) Alternative methods of measurements that provide suitable alternative results shall be permitted with the concurrence of the Rural Utilities Service (RUS).

(c) For the purpose of this testing standard, a ''measurement'' shall be defined as an evaluation where quantitative data is obtained (e.g., resistance in ohms, structural return loss in decibels (dB), etc.) and a ''test'' shall be defined as an evaluation where no quantitative data is obtained (e.g., a check mark indicating conformance is usually the result of the test).

(d) The sequence of tests and measurements described in this standard have been prepared as a guide. Variations from the sequence may be necessary on an individual application basis.

(e) There is some overlap in the methods of testing shown; also, the extent of each phase of testing may vary on an individual basis. The borrower shall determine the overall plan of testing, the need and extent of testing, and the responsibility for each phase of testing.

§ 1755.402 Ground resistance measurements.

(a) The resistance of the central office (CO) and the remote switching terminal (RST) ground shall be measured before and after it has been bonded to the master ground bar (MGB) where it is connected to the building electric service ground.

(b) The ground resistance of electronic equipment such as span line repeaters, carrier terminal equipment, concentrators, etc. shall be measured.

(c) *Method of measurement.* The connection of test equipment for the ground resistance measurement shall be as shown in Figure 1. Refer to RUS Bulletin 1751F–802, ''Electrical Protection Grounding Fundamentals,'' for a comprehensive discussion of ground resistance measurements.

(d) *Test equipment.* The test equipment for making this measurement is shown in Figure 1 as follows:

BILLING CODE 3410–15–P

FIGURE 1

GROUND RESISTANCE MEASUREMENT (1), (2)

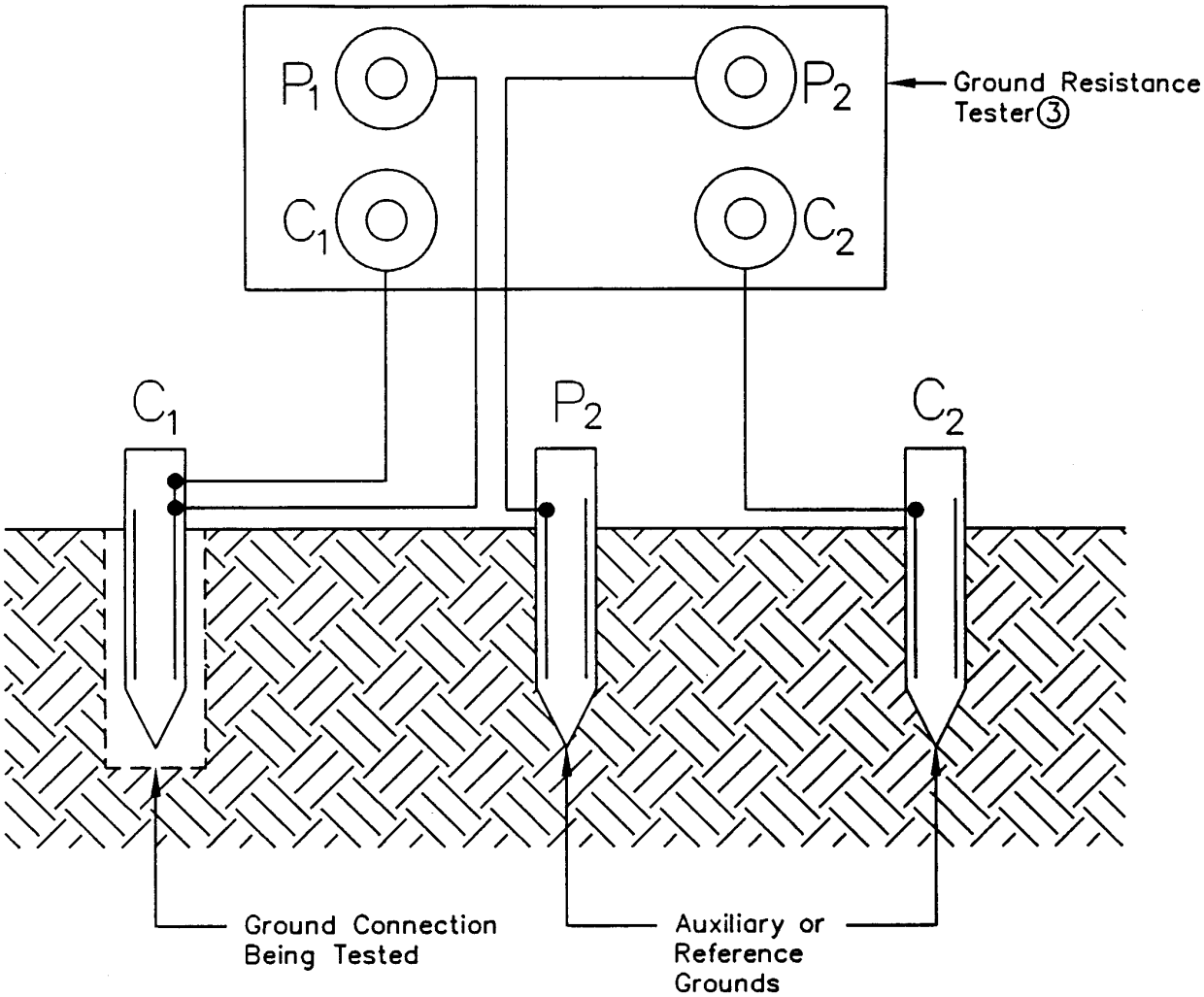

Notes:

(1.) Measurement procedure for COs, RSTs, and electronic equipment housings approximately 10 ft by 10 ft (3 m by 3m) or smaller shall be as follows: The minimum distance between the CO ground (C_1) being tested and C_2 = 100 ft (30.5 m). Take several measurements moving P_2 from 50 ft to 75 ft (15.2 m to 23 m) away from CO ground C_2. Resistance should initially rise then level off and then start rising again. The value to record for CO ground resistance is the value where it levels off which usually should occur with P_2 at 62 % of the distance between the CO ground and C_2.

(2.) Measurement procedure for COs, RSTs, and electronic equipment housings larger than 10 ft by 10 ft (3 m by 3 m) shall be in accordance with the test equipment manufacturer's instructions.

(3.) Dynatel Research–Vibroground, General Radio–Megger Bridge, Associate Research–Megohm Meter or equivalent.

BILLING CODE 3410–15–C

(e) *Applicable results.* (1) For the CO and RST, the resistance after the bond has been made to the MGB electric service ground shall not exceed 5 ohms. Where the measured ground resistance exceeds 5 ohms, the borrower shall determine what additional grounding, if any, shall be provided.

(2) For electronic equipment, the ground resistance shall not exceed 25 ohms. Where the measured ground resistance exceeds 25 ohms, the borrower shall determine what additional grounding, if any, shall be provided.

(3) When ground resistance measurements exceed the ground resistance requirements of paragraphs (e)(1) and (e)(2) of this section, refer to RUS Bulletin 1751F–802, ''Electrical Protection Grounding Fundamentals,'' for suggested methods of reducing the ground resistance.

(f) *Data record.* Results of the CO and RST ground resistance measurements shall be recorded. A suggested format similar to Format I, Outside Plant Acceptance Tests—Subscriber Loops, in § 1755.407 or a format specified in the applicable construction contract may be used. Results of the electronic equipment ground resistance measurements shall be recorded. A suggested format similar to Format II, Outside Plant Acceptance Tests—Trunk Circuits, in § 1755.407 or a format specified in the applicable construction contract may be used. Data showing approximate moisture content of the soil at the time of measurement, the temperature, the type of soil and a description of the test equipment used shall also be included.

(g) *Probable causes for nonconformance.* Refer to RUS Bulletin 1751F–802, ''Electrical Protection Grounding Fundamentals,'' and Telecommunications Engineering and Construction Manual (TE&CM) Section 810, ''Electrical Protection of Electronic Analog and Digital Central Office Equipment,'' for possible causes of nonconformance and suggested methods for corrective action.

§ 1755.403 Copper cable telecommunications plant measurements.

(a) *Shield or shield/armor continuity.* (1) Tests and measurements shall be made to ensure that cable shields or shield/armors are electrically continuous. There are two areas of concern. The first is shield or shield/armor bonding within a pedestal or splice and the second is shield or shield/armor continuity between pedestals or splices.

(2) Measurement techniques outlined here for verification of shield or shield/armor continuity are applicable to buried cable plant. Measurements of shield continuity between splices in aerial cable plant should be made prior to completion of splicing. Conclusive results cannot be obtained on aerial plant after all bonds have been completed to the supporting strand, multigrounded neutral, etc.

(3) *Method of measurement.* (i) The shield or shield/armor resistance measurements shall be made between pedestals or splices using either a Wheatstone bridge or a volt-ohm meter. For loaded plant, measurements shall be made on cable lengths that do not exceed one load section. For nonloaded plant, measurements shall be made on cable lengths that do not exceed 5,000 feet (ft) (1,524 meters (m)). All bonding wires shall be removed from the bonding lugs at the far end of the cable section to be measured. The step-by-step measurement procedure shall be as shown in Figure 2.

(ii) Cable shield or shield/armor continuity within pedestals or splices shall be measured with a cable shield splice continuity test set. The step-by-step measurement procedure outlined in the manufacturer's operating instructions for the specific test equipment being used shall be followed.

(4) *Test equipment.* (i) The test equipment for measuring cable shield or shield/armor resistance between pedestals or splices is shown in Figure 2 as follows:

BILLING CODE 3410–15–P

FIGURE 2

SHIELD OR SHIELD/ARMOR RESISTANCE MEASUREMENT

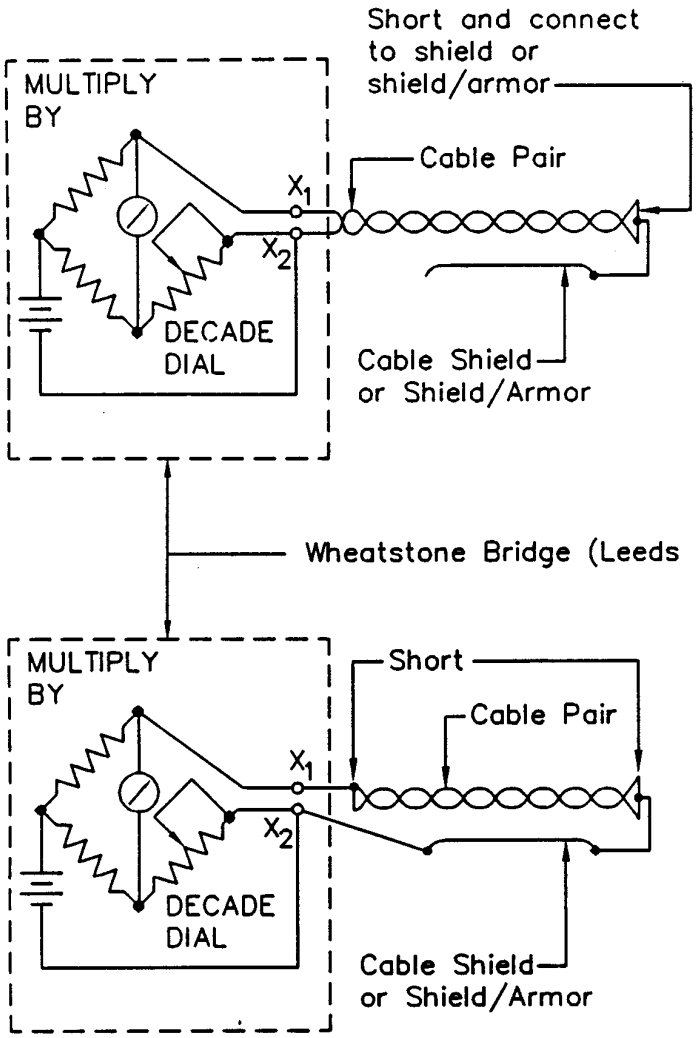

STEP 1

SETTINGS ON TEST SET

A. Set "RES.–VAR–MUR" Key to "RES".
B. Set "RVM–GA–HIL" Switch to "RVM".
C. Set "INT–BA–EXT" Switch to "INT".
D. Connect Pair to Terminals X_1 and X_2 as shown.

PROCEDURE

E. Null galvanometer by operating "MULTIPLY BY" and "DECADE" dials of bridge. Use lowest sensitivity range.
F. Multiply "DECADE" reading in ohms by "MULTIPLY BY" ratio to obtain value of the Loop Resistance (R_1). Record this value.

STEP 2

SETTINGS ON TEST SET

A. Set Keys and Switches as in STEP 1, A through C, above.
B. Connect Shorted Pair and Shield to Terminals X_1 and X_2 as shown.

PROCEDURE

C. Null galvanometer as in STEP 1, E, above.
D. Obtain value of Resistance (R_2) as in STEP 1, F, above.

STEP 3

COMPUTE THE SHIELD OR SHIELD/ARMOR RESISTANCE (R_S)

$$R_S = R_2 - \frac{R_1}{4}$$

BILLING CODE 3410–15–C

(ii) A cable shield splice continuity tester shall be used to measure shield or shield/armor continuity within pedestals or splices.

(5) *Applicable results.* (i) The shield or shield/armor resistance per 1000 ft and per kilometer (km) for cable diameters and types of shielding materials are given in Table 1 (English Units) and Table 2 (Metric Units), respectively as follows:

TABLE 1.—SHIELD RESISTANCE @ 68 °F (20°C) CABLE DIAMETERS VERSUS SHIELD TYPES

[English Units]

Outside diameter inches (in.)	Nominal resistance ohm/1000 ft.					
	A	B	C	D	E	F
0.40–0.49	0.77	1.54	1.65	1.96	2.30	5.51
0.50–0.59	0.64	1.28	1.37	1.63	1.91	4.58
0.60–0.69	0.51	1.03	1.10	1.31	1.53	3.67
0.70–0.79	0.44	0.88	0.94	.....	1.31	3.14
0.80–0.89	0.38	0.77	0.82	.....	1.14	2.74
0.90–0.99	0.35	0.69	0.74	.....	1.03	2.47
1.00–1.09	0.31	0.62	0.66	.....	0.92	2.20
1.10–1.19	0.28	0.56	0.60	.....	0.84	2.00
1.20–1.29	0.26	0.51	0.55	.....	0.77	1.84
1.30–1.39	0.24	0.48	0.51	.....	0.71	1.70
1.40–1.49	0.22	0.44	0.47	.....	0.65	1.57
1.50–1.59	0.21	0.41	0.44	.....	0.61	1.47
1.60–1.69	0.19	0.38	0.41	.....	0.57	1.37
1.70–1.79	0.18	0.37	0.39	.....	0.54	1.30
1.80–1.89	0.17	0.35	0.37	.....	0.51	1.24
1.90–1.99	0.16	0.33	0.35	.....	0.49	1.17
2.00–2.09	0.15	0.31	0.33	.....	0.46	1.10
2.10–2.19	0.15	0.29	0.31	.....	0.43	1.03
2.20–2.29	0.14	0.28	0.30	.....	0.42	1.00
2.30–2.39	0.14	0.27	0.29	.....	0.40	0.97
2.40–2.49	0.13	0.25	0.27	.....	0.38	0.90
2.50–2.59	0.12	0.24	0.26	.....	0.36	0.87
2.60–2.69	0.12	0.23	0.25	.....	0.35	0.83
2.70–2.79	0.11	0.22	0.24	.....	0.33	0.80
2.80–2.89	0.11	0.22	0.24	.....	0.33	0.80
2.90–2.99	0.11	0.22	0.23	.....	0.32	0.77
3.00–3.09	0.10	0.21	0.22	.....	0.31	0.73
3.10–3.19	0.10	0.20	0.21	.....	0.29	0.70
3.20–3.29	0.10	0.20	0.21	.....	0.29	0.70
3.30–3.39	0.09	0.19	0.20	.....	0.28	0.67
3.40–3.49	0.09	0.18	0.19	.....	0.26	0.63
3.50–3.59	0.09	0.18	0.19	.....	0.26	0.63
3.60–3.69	0.08	0.17	0.18	.....	0.25	0.60
3.70–3.79	0.08	0.17	0.18	.....	0.25	0.60
3.80–3.89	0.08	0.16	0.17	.....	0.24	0.57
3.90–3.99	0.08	0.16	0.17	.....	0.24	0.57
4.00–4.99	0.07	0.15	0.16	.....	0.22	0.53

Where: Column A–10 mil Copper shield.
Column B—5 mil Copper shield.
Column C—8 mil Coated Aluminum and 8 mil Coated Aluminum/6 mil Coated Steel shields.
Column D—7 mil Alloy 194 shield.
Column E—6 mil Alloy 194 and 6 mil Copper Clad Stainless Steel shields.
Column F—5 mil Copper Clad Stainless Steel and 5 mil Copper Clad Alloy Steel shields.

TABLE 2.—SHIELD RESISTANCE @ 68°F (20°C) CABLE DIAMETERS VERSUS SHIELD TYPES

[Metric Units]

Outside diameter millimeters (mm)	Nominal Resistance ohm/km					
	A	B	C	D	E	F
10.2—12.5	2.53	5.05	5.41	6.43	7.55	18.08
12.7—15.0	2.10	4.20	4.49	5.35	6.27	15.03
15.2—17.5	1.67	3.38	3.61	4.30	5.02	12.04
17.8—20.1	1.44	2.89	3.08	.....	4.30	10.30
20.3—22.6	1.25	2.53	2.69	.....	3.74	8.99
22.9—25.1	1.15	2.26	2.43	.....	3.38	8.10
25.4—27.7	1.02	2.03	2.16	.....	3.02	7.22
27.9—30.2	0.92	1.84	1.97	.....	2.76	6.56
30.5—32.8	0.85	1.67	1.80	.....	2.53	6.04
33.0—35.3	0.79	1.57	1.67	.....	2.33	5.58
35.6—37.8	0.72	1.44	1.54	.....	2.13	5.15
38.1—40.4	0.69	1.34	1.44	.....	2.00	4.82

TABLE 2.—SHIELD RESISTANCE @ 68°F (20°C) CABLE DIAMETERS VERSUS SHIELD TYPES—Continued

[Metric Units]

Outside diameter millimeters (mm)	Nominal Resistance ohm/km					
	A	B	C	D	E	F
40.6—42.9	0.62	1.25	1.34	.....	1.87	4.49
43.2—45.5	0.59	1.21	1.28	.....	1.77	4.26
45.7—48.0	0.56	1.15	1.21	.....	1.67	4.07
48.3—50.5	0.52	1.08	1.15	.....	1.61	3.84
50.8—53.1	0.49	1.02	1.08	.....	1.51	3.61
53.3—55.6	0.49	0.95	1.02	.....	1.41	3.38
55.9—58.2	0.46	0.92	0.98	.....	1.38	3.28
58.4—60.7	0.46	0.89	0.95	.....	1.31	3.18
61.0—63.2	0.43	0.82	0.89	.....	1.25	2.95
63.5—65.8	0.39	0.79	0.85	.....	1.18	2.85
66.0—68.3	0.39	0.75	0.82	.....	1.15	2.72
68.6—70.9	0.36	0.72	0.79	.....	1.08	2.62
71.1—73.4	0.36	0.72	0.79	.....	1.08	2.62
73.7—75.9	0.36	0.72	0.75	.....	1.05	2.53
76.2—78.5	0.33	0.69	0.72	.....	1.02	2.39
78.7—81.0	0.33	0.66	0.69	.....	0.95	2.30
81.3—83.6	0.33	0.66	0.69	.....	0.95	2.30
83.6—86.1	0.29	0.62	0.66	.....	0.92	2.20
86.4—88.6	0.29	0.59	0.62	.....	0.85	2.07
88.9—91.2	0.29	0.59	0.62	.....	0.85	2.07
91.4—93.7	0.26	0.56	0.59	.....	0.82	1.97
94.0—96.3	0.26	0.56	0.59	.....	0.82	1.97
96.5—98.8	0.26	0.52	0.56	.....	0.79	1.87
99.1—101.3	0.26	0.52	0.56	.....	0.79	1.87
101.6—103.9	0.23	0.49	0.52	.....	0.72	1.74

Where: Column A—10 mil Copper shield.
Column B—5 mil Copper shield.
Column C—8 mil Coated Aluminum and 8 mil Coated Aluminum/6 mil Coated Steel shields.
Column D—7 mil Alloy 194 shield.
Column E—6 mil Alloy 194 and 6 mil Copper Clad Stainless Steel shields.
Column F—5 mil Copper Clad Stainless Steel and 5 mil Copper Clad Alloy Steel shields.

(ii) All values of shield and shield/armor resistance provided in Tables 1 and 2 in (a)(5)(i) of this section are considered approximations. If the measured value corrected to 68°F (20°C) is within ±30 percent (%) of the value shown in Table 1 or 2, the shield and shield/armor shall be assumed to be continuous.

(iii) To correct the measured shield resistance to the reference temperature of 68°F (20°C) use the following formulae:

$R_{68}=Rt/[1+A(t-68)]$ for English Units

$R_{20}=Rt/[1+A(t-20)]$ for Metric Units

Where:

R_{68}=Shield resistance corrected to 68°F in ohms.

R_{20}=Shield resistance corrected to 20°C in ohms.

R_t=Shield resistance at measurement temperature in ohms.

A=Temperature coefficient of the shield tape.

t=Measurement temperature in °F or (°C).

(iv) The temperature coefficients (A) for the shield tapes to be used in the formulae referenced in paragraph (a)(5)(iii) of this section are as follows:

(A) 5 and 10 mil copper = 0.0021 for English units and 0.0039 for Metric units;

(B) 8 mil coated aluminum and 8 mil coated aluminum/6 mil coated steel = 0.0022 for English units and 0.0040 for Metric units;

(C) 5 mil copper clad stainless steel and 5 mil copper clad alloy steel = 0.0024 for English units and 0.0044 for Metric units;

(D) 6 mil copper clad stainless steel = 0.0019 for English units and 0.0035 for Metric units; and

(E) 6 and 7 mil alloy 194 = 0.0013 for English units and 0.0024 for Metric units.

(v) When utilizing shield continuity testers to measure shield and shield/armor continuity within pedestals or splices, refer to the manufacturer's published information covering the specific test equipment to be used and for anticipated results.

(6) *Data record*. Measurement data from shield continuity tests shall be recorded together with anticipated Table 1 or 2 values (see paragraph (a)(5)(i) of this section) in an appropriate format to permit comparison. The recorded data shall include specific location, cable size, cable type, type of shield or shield/armor, if known, etc.

(7) *Probable causes for nonconformance*. Among probable causes for nonconformance are broken or damaged shields or shield/armors, bad bonding harnesses, poorly connected bonding clamps, loose bonding lugs, etc.

(b) *Conductor continuity*. After placement of all cable and wire plant has been completed and joined together in continuous lengths, tests shall be made to ascertain that all pairs are free from grounds, shorts, crosses, and opens, except for those pairs indicated as being defective by the cable manufacturer. The tests for grounds, shorts, crosses, and opens are not separate tests, but are inherent in other acceptance tests discussed in this section. The test for grounds, shorts, and crosses is inherent when conductor insulation resistance measurements are conducted per paragraph (c) of this section, while tests for opens are inherent when tests are conducted for loop resistance, insertion loss, noise, or return loss measurements, per paragraphs (d), (e), or (f) of this section. The borrower shall make certain that all defective pairs are corrected, except

those noted as defective by the cable manufacturer in accordance with the marking provisions of the applicable cable and wire specifications. All defective pairs that are not corrected shall be reported in writing with details of the corrective measures attempted.

(c) *Dc insulation resistance (IR) measurement.* (1) IR measurements shall be made on completed lengths of insulated cable and wire plant.

(2) *Method of measurement.* (i) The IR measurement shall be made between each conductor and all other conductors, sheath, shield and/or shield/armor, and/or support wire electrically connected together and to the main distributing frame (MDF) ground. The measurement shall be made from the central office with the entire length of the cable under test and, where used with all protectors and load coils connected. For COs containing solid state arresters, the solid state arresters shall be removed before making the IR measurements. Field mounted voice frequency repeaters, where used, may be left connected for the IR test but all carrier frequency equipment, including carrier repeaters and terminals, shall be disconnected. Pairs used to feed power remote from the CO shall have the power disconnected and the tip and ring conductors shall be opened before making IR tests. All conductors shall be opened at the far end of the cable being measured.

(ii) IR tests are normally made from the MDF with all CO equipment disconnected at the MDF, but this test may be made on new cables at field locations before they are spliced to existing cables. The method of measurement shall be as shown in Figure 3 as follows:

BILLING CODE 3410–15–P

FIGURE 3

DC INSULATION RESISTANCE MEASUREMENT

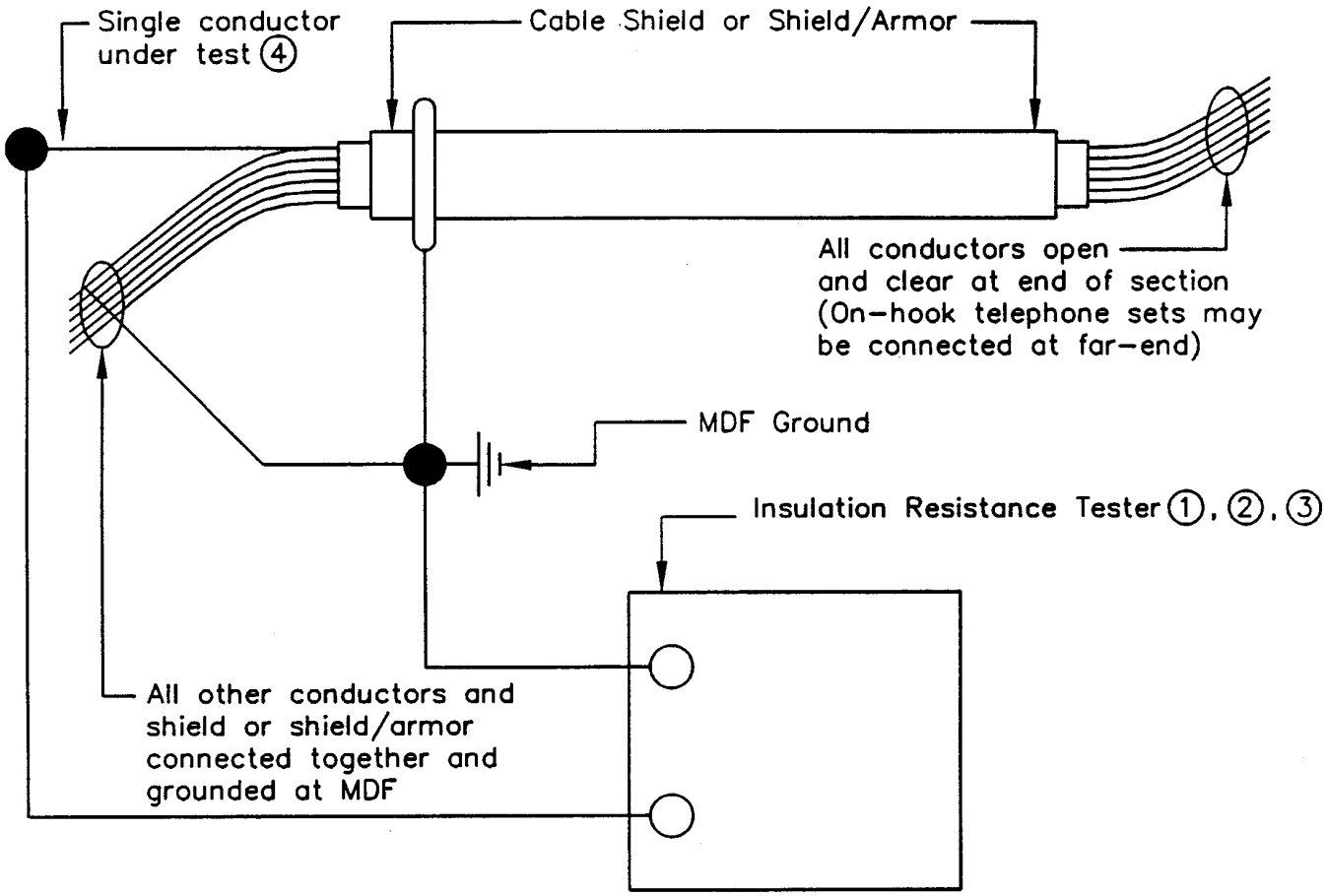

Notes:

1. For hand cranked or battery operated Insulation Resistance Testers, the output voltage should not exceed 500 volts dc.

2. For dc bridge type Megohmmeters, the voltage applied to the conductors under test should not exceed 250 volts dc when using instruments having adjustable test voltage levels.

3. Biddle CO.–Model BM 200, Associate Research–Model 263, General Radio–1864 Megohm Meter, or equivalent.

4. Repeat test for each conductor in cable.

BILLING CODE 3410–15–C

(iii) If the IR of the conductor cannot be measured because of breakdown of lightning arresters by the test voltage, the arrester units shall be removed and the conductor IR retested. If the IR then meets the minimum requirements, the conductor will be considered satisfactory. Immediately following the IR tests, all arrester units which have been removed shall be reinstalled.

(3) *Test equipment.* (i) IR measurements shall be made with either an insulation resistance test set or a direct current (dc) bridge type megohmmeter.

(ii) The IR test set shall have an output voltage not to exceed 500 volts dc and shall be of the hand cranked or battery operated type.

(iii) The dc bridge type megohmmeter, which may be alternating current (ac) powered, shall have scales and multiplier which make it possible to accurately read IR from 1 megohm to 1 gigohm. The voltage applied to the conductors under test shall not exceed ''250 volts dc'' when using an instrument having adjustable test voltage levels. This will help to prevent breakdown of lightning arresters.

(4) *Applicable results.* (i) For all new insulated cable or wire facilities, the expected IR levels are normally greater than 1,000 to 2,000 megohm-mile (1,609 to 3,218 megohm-km). A value of 500 megohm-mile (805 megohm-km) at 68°F (20°C) shall be the minimum acceptable value of IR. IR varies inversely with the length and the temperature.

(ii) The megohm-mile (megohm-km) value for a conductor may be computed by multiplying the actual scale reading in megohms on the test set by the length in miles (km) of the conductor under test.

(iii) The objective insulation resistance may be determined by dividing 500 by the length in miles (805 by the length in km) of the cable or wire conductor being tested. The resulting value shall be the minimum acceptable meter scale reading in megohms.

(iv) Due to the differences between various insulating materials and filling compounds used in manufacturing cable or wire, it is impractical to provide simple factors to predict the magnitude of variation in insulation resistance due to temperature. The variation can, however, be substantial for wide excursions in temperature from the ambient temperature of 68 °F (20 °C).

(v) Borrowers should be certain that tip and ring IR measurements of each pair are approximately the same. Borrowers should also be certain that IR measurements are similar for cable or wire sections of similar length and cable or wire type. If some pairs measure significantly lower, borrowers should attempt to improve these pairs in accordance with cable manufacturer's recommendations.

Note: Only the megohm-mile (megohm-km) requirement shall be cause for rejection, not individual measurement differences.

(5) *Data record.* The measurement data shall be recorded. Suggested formats similar to Format I, Outside Plant Acceptance Tests—Subscriber Loops, or Format II, Outside Plant Acceptance Tests—Trunk Circuits, in § 1755.407 or formats specified in the applicable construction contract may be used.

(6) *Probable causes for nonconformance.* (i) When an IR measurement is below 500 megohm-mile (805 megohm-km), the cable or wire temperature at the time of testing must then be taken into consideration. If this temperature is well above 68 °F (20 °C), the measurement shall be disregarded and the cable or wire shall be remeasured at a time when the temperature is approximately 68 °F (20 °C). If the result is then 500 megohm-mile (805 megohm-km) or greater, the cable or wire shall be considered satisfactory.

(ii) Should the cable or wire fail to meet the 500 megohm-mile (805 megohm-km) requirement when the temperature is known to be approximately 68 °F (20 °C) there is not yet justification for rejection of the cable or wire. Protectors, lightning arresters, etc., may be a source of low insulation resistance. These devices shall be removed from the cable or wire and the cable or wire IR measurement shall be repeated. If the result is acceptable, the cable or wire shall be considered acceptable. The removed devices which caused the low insulation resistance value shall be identified and replaced, if found defective.

(iii) When the cable or wire alone is still found to be below the 500 megohm-mile (805 megohm-km) requirement after completing the steps in paragraph (c)(6)(i) and/or paragraph (c)(6)(ii) of this section, the test shall be repeated to measure the cable or wire in sections to isolate the piece(s) of cable or wire responsible. The cable or wire section(s) that is found to be below the 500 megohm-mile (805 megohm-km) requirement shall be either repaired in accordance with the cable or wire manufacturer's recommended procedure or shall be replaced as directed by the borrower.

(d) *Dc loop resistance and dc resistance unbalance measurement.* (1) When specified by the borrower, dc loop resistance and dc resistance unbalance measurements shall be made on all cable pairs used as trunk circuits. The dc loop resistance and dc resistance unbalance measurements shall be made between CO locations. Measurements shall include all components of the cable path.

(2) Dc loop resistance and dc resistance unbalance measurements shall be made on all cable pairs used as subscriber loop circuits when:

(i) Specified by the borrower;

(ii) A large number of long loops terminate at one location (similar to trunk circuits); or

(iii) Circuit balance is less than 60 dB when computed from noise measurements as described in paragraph (e) of this section.

(3) Dc resistance unbalance is controlled to the maximum possible degree by the cable specification. Allowable random unbalance is specified between tip and ring conductors within each reel. Further random patterns should occur when the cable conductor size changes. Cable meeting the unbalance requirements of the cable specification may under some conditions result in unacceptable noise levels as discussed in paragraph (d)(6)(iii) of this section.

(4) *Method of measurement.* The method of measurement shall be as detailed in Figures 4 and 5.

(5) *Test equipment.* The test equipment is shown in Figures 4 and 5 as follows:

BILLING CODE 3410–15–P

FIGURE 4

DC LOOP RESISTANCE MEASUREMENT

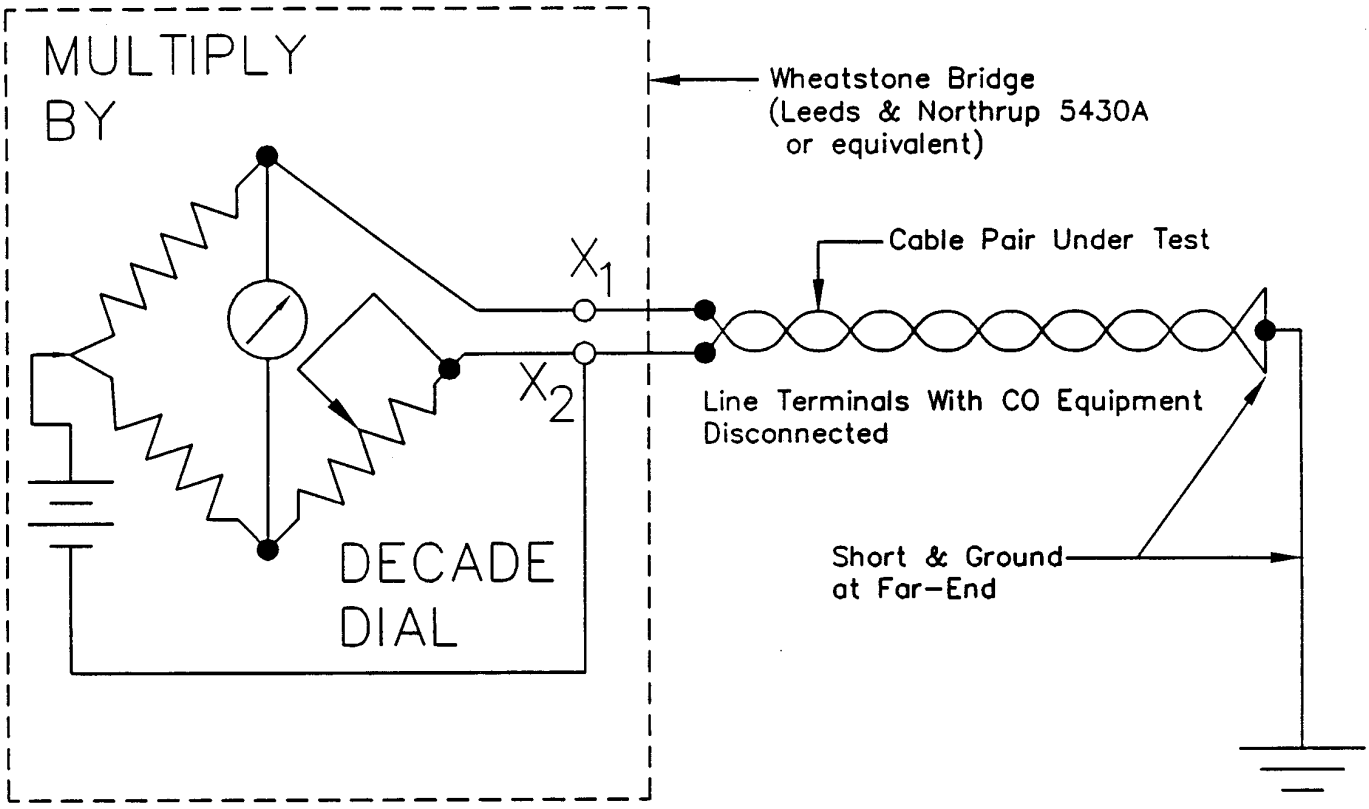

SETTINGS ON TEST SET

1. Set "RES.–VAR–MUR" Key to "RES".
2. Set "RVM–GA–HIL" Switch to "RVM".
3. Set "INT–BA–EXT" Switch to "INT".
4. Connect Pair to Terminals X_1 and X_2 as shown.

PROCEDURE

1. Null galvanometer by operating "MULTIPLY BY" and "DECADE" dials of bridge. Use lowest sensitivity range.

2. Multiply "DECADE" reading in ohms by "MULTIPLY BY" ratio to obtain value of the Loop Resistance.

FIGURE 5

DC LOOP RESISTANCE UNBALANCE MEASUREMENT

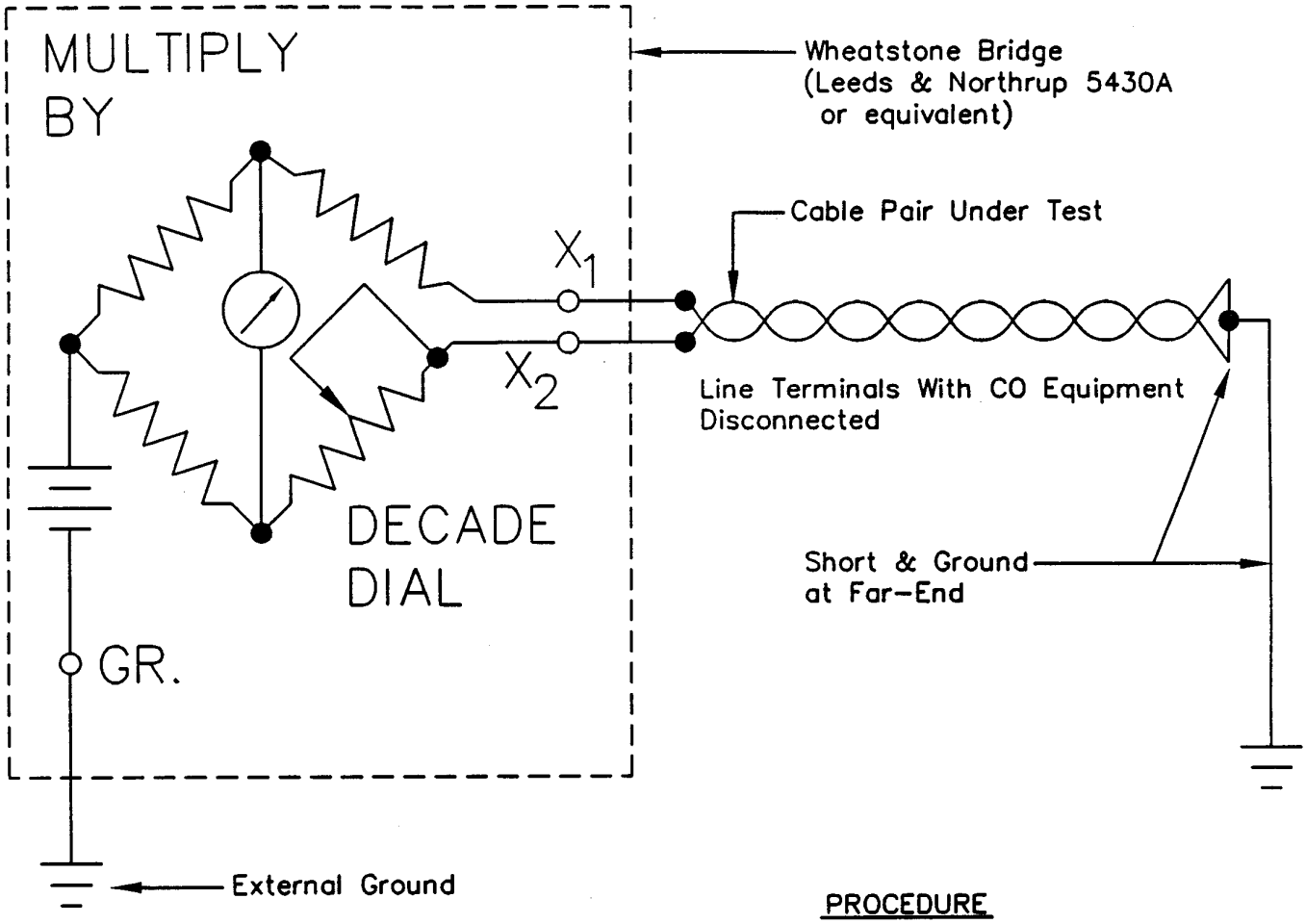

SETTINGS ON TEST SET

1. Connect Terminals X_1 & X_2 as shown.
2. Set "RES.–VAR–MUR" Key to "VAR".
3. "MULTIPLY BY" Switch to 1/1.
4. Set "RVM–GA–HIL" Switch to "RVM".
5. Set "INT–BA–EXT" Switch to "INT".

PROCEDURE

1. Null galvanometer by operating "MULTIPLY BY" and "DECADE" dials of bridge. Use lowest sensitivity range.
2. If continuously varying 1, 10, or 100 ohm switches from 1 to 999 ohms produces a deflection consistently to the left on the galvanometer, reverse the conductors of the cable pair under test to the X_1 & X_2 terminals of the bridge.
3. Vary 1, 10, or 100 ohm switches again until deflection approaches zero. Read "DECADE" dial for Resistance Unbalance in ohms.

BILLING CODE 3410–15–C

(6) *Applicable results.* (i) The measured dc loop resistance shall be within ± 5% of the calculated dc loop resistance when corrected for temperature.

(ii) The calculated dc loop resistance is computed as follows:

(A) Multiply the length of each different gauge by the applicable resistance per unit length as shown in Table 3 as follows:

TABLE 3.—DC LOOP RESISTANCE @ 68°F (20°C)

American wire gauge (AWG)	Loop resistance	
	ohms/1000 ft	ohms/km
19	16.1	52.8
22	32.4	106.3
24	51.9	170.3
26	83.3	273.3

(B) Add the individual resistances for each gauge to give the total calculated dc loop resistance at a temperature of 68°F (20°C).

(C) Correct the total calculated dc loop resistance at the temperature of 68°F (20°C) to the measurement temperature by the following formulae:

$R_t=R_{68}\times[1+0.0022\times t—68)]$ for English Units

$R_t=R_{20}\times[1+0.0040\times(t—20)]$ for Metric Units

Where:

R_t = Loop resistance at the measurement temperature in ohms.

R_{68} = Loop resistance at a temperature of 68°F in ohms.

R_{20} = Loop resistance at a temperature of 20°C in ohms.

t = Measurement temperature in °F or (°C).

(D) Compare the calculated dc loop resistance at the measurement temperature to the measured dc loop resistance to determine compliance with the requirement specified in paragraph (d)(6)(i) of this section.

(iii) Resistance varies directly with temperature change. For copper conductor cables, the dc resistance changes by ± 1% for every ± 5°F (2.8°C) change in temperature from 68°F (20°C).

(iv) The dc resistance unbalance between the individual conductors of a pair shall not exceed that value which will result in a circuit balance of less than 60 dB when computed from noise measurements as described in paragraph (e) of this section. It is impractical to establish a precise limit for overall circuit dc resistance unbalance due to the factors controlling its contribution to circuit noise. These factors include location of the resistance unbalance in relation to a low impedance path to ground (close to the central office) and the magnitude of unbalance in short lengths of cable making up the total circuit length. The objective is to obtain the minimum unbalance throughout the entire circuit when it is ascertained through noise measurements that dc resistance unbalance may be contributing to poor cable balance.

(v) Pairs with poor noise balance may be improved by reversing tip and ring conductors of pairs at cable splices. Where dc resistance unbalances are systematic over the total trunk circuit or loop circuit length, tip and ring reversals may be made at frequent intervals. Where the unbalances are concentrated in a shorter section of cable, only one tip and ring reversal should be required. Concentrated dc resistance unbalance produces maximum circuit noise when located adjacent to the central office. Concentrated dc resistance unbalance will contribute to overall circuit noise at a point approximately two-thirds (⅔) of the distance to the subscriber. All deliberate tip and ring reversals shall be tagged and identified to prevent plant personnel from removing the reversals when resplicing these connections in the future. The number of tip and ring reversals shall be held to a minimum.

(vi) A systematic dc resistance unbalance can sometimes be accompanied by other cable parameters that are marginal. Among these are pair-to-pair capacitance unbalance, capacitance unbalance-to-ground, and 150 kilohertz (kHz) crosstalk loss. Engineering judgment has to be applied in each case. Rejection of cable for excessive dc resistance unbalance shall only apply to a single reel length, or shorter.

(7) *Data record*. The measurement data for dc loop resistance and dc resistance unbalance shall be recorded. Suggested formats similar to Format I for subscriber loops and Format II for trunk circuits in § 1755.407 or formats specified in the applicable construction contract may be used.

(8) *Probable causes for nonconformance*. Dc loop resistance and dc resistance unbalance are usually the result of the resistance of individual conductors used in the manufacture of the cable. Resistance unbalance can be worsened by defective splicing of the conductors (splicing connectors, improper crimping tool, etc.).

(e) *Subscriber loop measurement (loop checking)*. (1) When specified by the borrower, insertion loss and noise measurements shall be performed on subscriber loops after connection of a line circuit to the loop by the one person method using loop checking equipment from the customer access location. For this method, the central office should be equipped with a 900 ohm plus two microfarad quiet termination and a milliwatt generator having the required test frequencies; or a portable milliwatt generator having the desired frequencies may be used, especially, where several small offices are involved.

(2) At a minimum, insertion loss and frequency response of subscriber loop plant shall be measured at 1,000, 1,700, 2,300, and 2,800 Hertz (Hz). When additional testing frequencies are desired, the additional frequencies shall be specified in the applicable construction contract.

(3) Measurements of insertion loss and noise shall be made on five percent or more of the pairs. A minimum of five pairs shall be tested on each route. Pairs shall be selected on a random basis with greater consideration in the selection given to the longer loops. Consideration shall be given to measuring a large percentage, up to 100 percent, of all loops.

(4) *Method of measurement*—(i) *Insertion loss*. The step-by-step measurement procedure shall be as shown in Figure 6. The output level of the milliwatt generator tones shall be determined prior to leaving the CO. This shall be accomplished by dialing the milliwatt generator number from a spare line at the MDF and measuring with the same equipment to be used in the tests at customer access locations. The output levels shall be recorded for reference later. Insertion loss measurements shall be made across the tip and ring terminals of the pair under test. Figure 6 is as follows:

BILLING CODE 3410–15–P

FIGURE 6

INSERTION LOSS AND FREQUENCY RESPONSE MEASUREMENT AT SUBSCRIBER LOCATION USING LOOP CHECKING EQUIPMENT

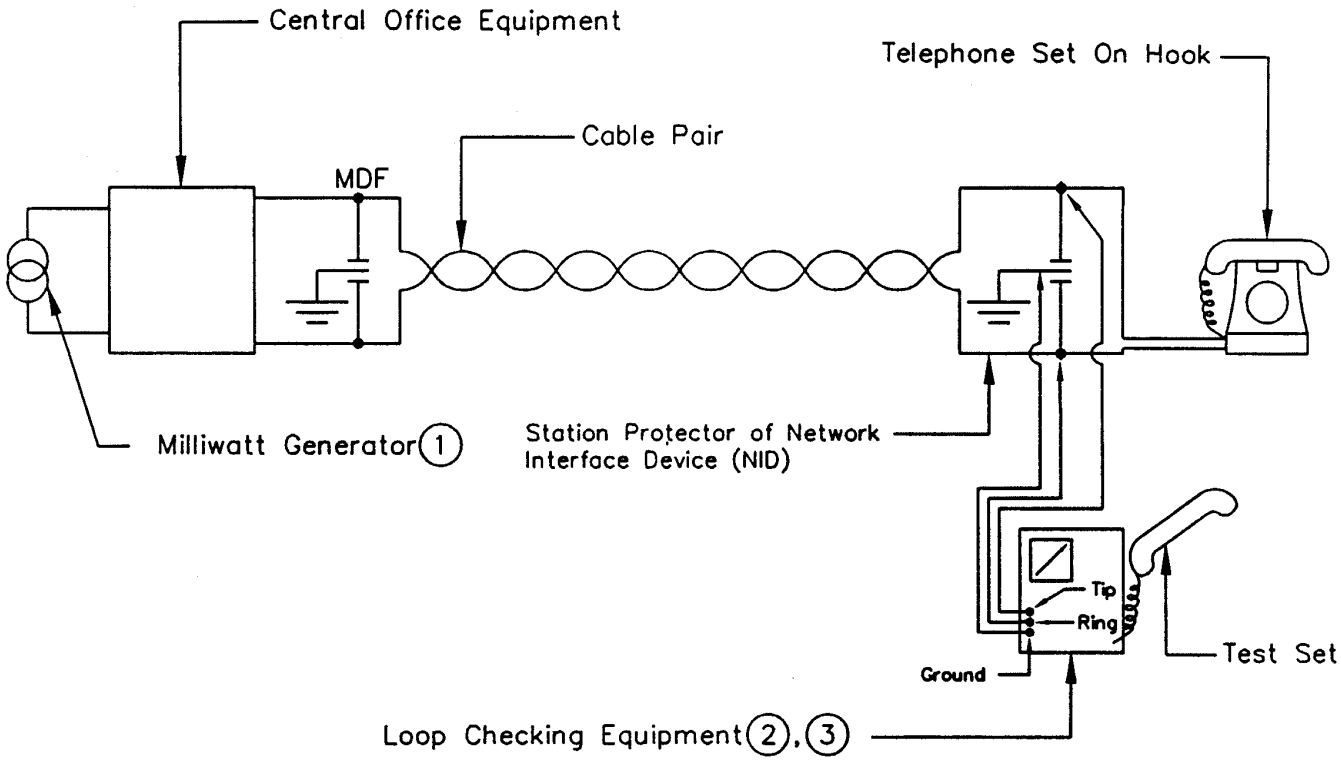

Calibration

1. Before leaving CO connect Loop Checking equipment to idle line at MDF.

   A. Dial number of Milliwatt Generator.

   B. Read and record output level of all tones in dBm for reference.

Notes:

(1.) H.P.–204B, H.P.–204C, General Radio–1335, or equivalent.

(2.) N.E.C.–125, N.E.C.–37B, Wilcom–136, Wilcom–336, Wilcom–337, or equivalent.

(3.) Do not leave test equipment connected and exposed to ringing voltage of incoming call. Ringing voltage could damage test equipment.

Measurement Procedure

1. Connect Loop Checking equipment at subscriber's NID as shown.
2. Dial number of Milliwatt Generator at central office.
3. Verify by listening on the test set that the tones are being received.
4. Switch test set to Circuit Loss mode.
5. Read loss in dBm at each frequency.
6. Record results of loss at each frequency.
7. Subtract the output levels observed at the CO for each tone by the values observed at the subscriber location. The resultant values are the Insertion Loss.
8. Disconnect leads of test equipment from NID when tests are completed.

BILLING CODE 3410–15–C

(ii) *Noise.* The step-by-step measurement procedure shall be as shown in Figure 7. Prior to leaving the CO for testing, dial the 900 ohm plus two microfarad quiet termination from a spare pair and measure the termination to determine that it actually is quiet. Circuit noise (noise-metallic) shall be measured at the customer access location across the tip and ring terminals of the pair under test. Power influence (direct reading with loop checking equipment) shall be measured at the customer access location from tip and ring conductors-to-ground (this connection is completed via the test unit). The power influence measurement includes the entire talking connection from the quiet termination to the customer. (That is, the power influence measurement includes all the CO equipment which normally makes up the connection.) Figure 7 is as follows:

BILLING CODE 3410–15–P

FIGURE 7

NOISE MEASUREMENT AT SUBSCRIBER LOCATION USING LOOP CHECKING EQUIPMENT

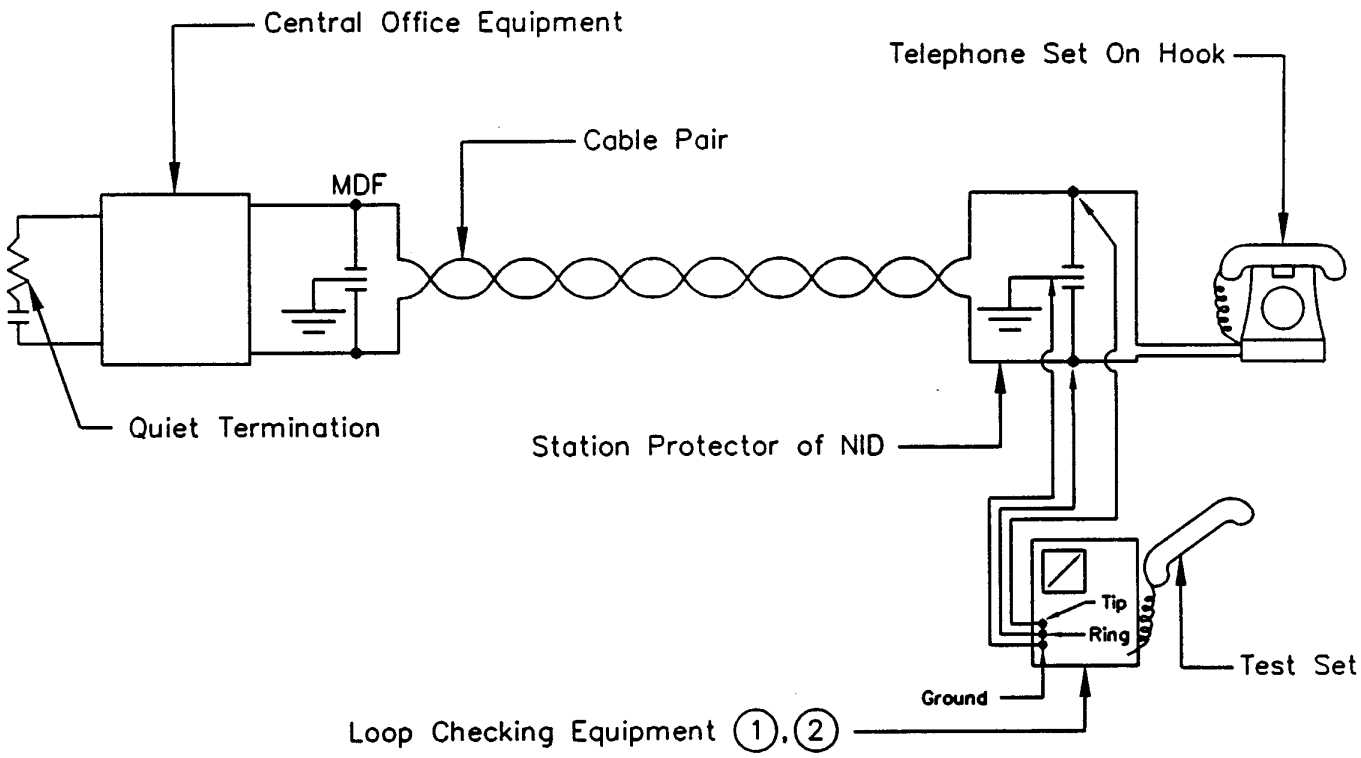

Calibration

1. Before leaving CO connect Loop Checking equipment to idle line at MDF (no outside plant attached).

   A. Dial number of Quiet Termination.

   B. Read and record Circuit Noise in dBrnc.

Note:

(1.) N.E.C.–125, N.E.C.–37B, Wilcom–136, Wilcom–336, Wilcom–337, or equivalent.

(2.) Do not leave test equipment connected and exposed to ringing voltage of incoming call. Ringing voltage could damage test equipment.

Measurement Procedure

1. Connect Loop Checking equipment at subscriber's NID as shown.
2. Dial number of Quiet Termination in cental office.
3. Switch test set to Circuit Noise (NM) mode.
4. Read and record Circuit Noise value in dBrnc.
5. Switch test set to Power Influence (PI) mode.
6. Read and record Power Influence value in dBrnc.
7. Compute and record apparent Balance (Balance = PI – NM).
8. Disconnect leads of test equipment from NID when tests are completed.

BILLING CODE 3410–15–C

(5) *Test equipment.* (i) Loop checking equipment which is available from several manufacturers may be used for these measurements. The equipment should have the capability of measuring loop current, insertion loss, circuit noise (NM) and power influence (PI). The test equipment manufacturer's operating instructions shall be followed.

(ii) There should be no measurable transmission loss when testing through loop extenders.

(6) *Applicable results—(i) Insertion loss.* (A) For D66 loaded cables (a specific loading scheme using a 66 millihenry inductor spaced nominally at 4,500 ft [1,371 m] intervals) measured at a point one-half section length beyond the last load point, the measured nonrepeated insertion loss shall be within ± 10% at 1000, 1700, 2300, and 2800 Hz, ± 15% at 3400 Hz and ± 20% at 4000 Hz of the calculated insertion loss at the same frequencies and temperature.

(B) For H88 loaded cables (a specific loading scheme using an 88 millihenry inductor spaced nominally at 6,000 ft [1,829 m] intervals) measured at a point one-half section length beyond the last load point, the measured nonrepeatered insertion loss shall be within ± 10% at 1000, 1700, and 2300 Hz, ± 15% at 2800 Hz, and ± 20% at 3400 Hz of the calculated insertion loss at the same frequencies and temperature.

(C) For nonloaded cables, the measured insertion loss shall be within ± 10% at 1000, 1700, 2300, and 2800 Hz, ± 15% at 3400 Hz and ± 20% at 4000 Hz of the calculated insertion loss at the same frequencies and temperature.

(D) For loaded cables, the calculated loss at each desired frequency shall be computed as follows:

(*1*) Multiply the length in miles (km) of each different gauge in the loaded portion of the loop (between the office and a point one-half load section beyond the furthest load point) by the applicable decibel (dB)/mile (dB/km) value shown in Table 4 or 5. This loss represents the total loss for each gauge in the loaded portion of the loop;

(*2*) Multiply the length in miles (km) of each different gauge in the end section or nonloaded portion of the cable (beyond a point one-half load section beyond the furthest load point) by the applicable dB/mile (dB/km) value shown in Table 6. This loss represents the total loss for each gauge in the nonloaded portion of the loop; and

(*3*) The total calculated insertion loss is computed by adding the individual losses determined in paragraphs (e)(6)(i)(D)(*1*) and (e)(6)(i)(D)(*2*) of this section.

(E) For nonloaded cables, the calculated loss at each desired frequency shall be computed by multiplying the length in miles (km) of each different gauge by the applicable dB/mile (dB/km) value shown in Table 6 and then adding the individual losses for each gauge to determine the total calculated insertion loss for the nonloaded loop.

(F) The attenuation information in Tables 4, 5, and 6 are based on a cable temperature of 68 °F (20 °C). Insertion loss varies directly with temperature. To convert measured losses for loaded cables to a different temperature, use the following value for copper conductors: For each ±5 °F (±2.8 °C) change in the temperature from 68 °F (20 °C), change the insertion loss at any frequency by ±1%. To convert measured losses for nonloaded cables to a different temperature, use the following value for copper conductors: For each ±10 °F (±5.6 °C) change in the temperature from 68 °F (20 °C), change the insertion loss at any frequency by ±1%. Tables 4, 5, and 6 are as follows:

TABLE 4.—FREQUENCY ATTENUATION @ 68 °F (20 °C) D66 LOADED EXCHANGE CABLES 83 NANOFARAD (NF)/MILE (52 NF/KM) (SEE NOTE)

Frequency (Hz)	Attenuation dB/mile (dB/km) AWG			
	19	22	24	26
200	0.41 (0.26)	0.67 (0.42)	0.90 (0.56)	1.21 (0.75)
400	0.43 (0.26)	0.77 (0.48)	1.09 (0.68)	1.53 (0.95)
600	0.44 (0.27)	0.80 (0.49)	1.17 (0.73)	1.70 (1.06)
800	0.44 (0.27)	0.81 (0.50)	1.21 (0.75)	1.80 (1.12)
1000	0.44 (0.27)	0.82 (0.51)	1.23 (0.76)	1.86 (1.15)
1200	0.45 (0.28)	0.83 (0.52)	1.24 (0.77)	1.91 (1.19)
1400	0.45 (0.28)	0.83 (0.52)	1.26 (0.78)	1.94 (1.20)
1600	0.45 (0.28)	0.84 (0.52)	1.26 (0.78)	1.96 (1.22)
1800	0.45 (0.28)	0.84 (0.52)	1.27 (0.78)	1.98 (1.23)
2000	0.46 (0.29)	0.85 (0.53)	1.28 (0.79)	1.99 (1.24)
2200	0.46 (0.29)	0.85 (0.53)	1.29 (0.80)	2.01 (1.25)
2400	0.47 (0.29)	0.86 (0.53)	1.30 (0.81)	2.02 (1.26)
2600	0.47 (0.29)	0.87 (0.54)	1.31 (0.81)	2.04 (1.27)
2800	0.48 (0.30)	0.88 (0.55)	1.32 (0.82)	2.07 (1.29)
3000	0.49 (0.30)	0.89 (0.55)	1.34 (0.83)	2.10 (1.30)
3200	0.50 (0.31)	0.91 (0.57)	1.36 (0.84)	2.13 (1.32)
3400	0.52 (0.32)	0.93 (0.58)	1.40 (0.87)	2.19 (1.36)
3600	0.54 (0.34)	0.97 (0.60)	1.45 (0.90)	2.26 (1.40)
3800	0.57 (0.35)	1.02 (0.63)	1.52 (0.94)	2.36 (1.47)
4000	0.62 (0.38)	1.10 (0.68)	1.63 (1.01)	2.53 (1.57)

NOTE: Between end-section lengths of 2,250 ft (686 m) for D66 loading.

TABLE 5.—FREQUENCY ATTENUATION @ 68 °F (20 °C) H88 LOADED EXCHANGE CABLES 83 NF/ MILE (52 NF/KM) (SEE NOTE)

Frequency (Hz)	Attenuation dB/mile (dB/km) AWG			
	19	22	24	26
200	0.40 (0.25)	0.66 (0.41)	0.90 (0.56)	1.20 (0.75)

TABLE 5.—FREQUENCY ATTENUATION @ 68 °F (20 °C) H88 LOADED EXCHANGE CABLES 83 nF/ MILE (52 nF/KM) (SEE NOTE)—Continued

Frequency (Hz)	Attenuation dB/mile (dB/km) AWG			
	19	22	24	26
400	0.42 (0.26)	0.76 (0.47)	1.08 (0.67)	1.53 (0.95)
600	0.43 (0.27)	0.79 (0.49)	1.16 (0.72)	1.70 (1.06)
800	0.43 (0.27)	0.80 (0.50)	1.20 (0.75)	1.80 (1.12)
1000	0.43 (0.27)	0.81 (0.50)	1.23 (0.76)	1.86 (1.15)
1200	0.44 (0.27)	0.82 (0.51)	1.24 (0.77)	1.91 (1.19)
1400	0.44 (0.28)	0.82 (0.51)	1.25 (0.78)	1.94 (1.20)
1600	0.44 (0.27)	0.83 (0.52)	1.26 (0.78)	1.97 (1.22)
1800	0.45 (0.28)	0.84 (0.52)	1.28 (0.79)	1.99 (1.24)
2000	0.46 (0.29)	0.85 (0.53)	1.29 (0.80)	2.02 (1.26)
2200	0.47 (0.29)	0.86 (0.53)	1.31 (0.81)	2.06 (1.28)
2400	0.48 (0.30)	0.89 (0.55)	1.34 (0.83)	2.10 (1.30)
2600	0.50 (0.31)	0.92 (0.57)	1.39 (0.86)	2.18 (1.35)
2800	0.53 (0.33)	0.97 (0.60)	1.47 (0.91)	2.29 (1.42)
3000	0.59 (0.37)	1.07 (0.66)	1.60 (0.99)	2.48 (1.54)
3200	0.71 (0.44)	1.26 (0.78)	1.87 (1.16)	2.86 (1.78)
3400	1.14 (0.71)	1.91 (1.19)	2.64 (1.64)	3.71 (2.30)
3600	4.07 (2.53)	4.31 (2.68)	4.65 (2.90)	5.30 (3.29)
3800	6.49 (4.03)	6.57 (4.08)	6.72 (4.18)	7.06 (4.39)
4000	8.22 (5.11)	8.27 (5.14)	8.36 (5.19)	8.58 (5.33)

NOTE: Between end-section lengths of 3,000 ft (914 m) for H88 loading.

TABLE 6.—FREQUENCY ATTENUATION @ 68 °F (20 °C) NONLOADED EXCHANGE CABLES 83 nF/ MILE (52 nF/KM) AWG

Frequency (Hz)	Attenuation dB/mile (dB/km) AWG			
	19	22	24	26
200	0.58 (0.36)	0.82 (0.51)	1.03 (0.64)	1.30 (0.81)
400	0.81 (0.51)	1.15 (0.71)	1.45 (0.90)	1.84 (1.14)
600	0.98 (0.61)	1.41 (0.87)	1.77 (1.10)	2.26 (1.40)
800	1.13 (0.70)	1.62 (1.01)	2.04 (1.27)	2.60 (1.61)
1000	1.25 (0.78)	1.80 (1.12)	2.28 (1.42)	2.90 (1.80)
1200	1.36 (0.84)	1.97 (1.22)	2.50 (1.55)	3.17 (1.97)
1400	1.46 (0.91)	2.12 (1.32)	2.69 (1.67)	3.42 (2.12)
1600	1.55 (0.96)	2.26 (1.40)	2.87 (1.78)	3.65 (2.27)
1800	1.63 (1.01)	2.39 (1.48)	3.04 (1.89)	3.87 (2.40)
2000	1.71 (1.06)	2.51 (1.56)	3.20 (1.99)	4.08 (2.53)
2200	1.78 (1.11)	2.62 (1.63)	3.35 (2.08)	4.27 (2.65)
2400	1.85 (1.15)	2.73 (1.70)	3.49 (2.17)	4.45 (2.76)
2600	1.91 (1.19)	2.83 (1.76)	3.62 (2.25)	4.63 (2.88)
2800	1.97 (1.22)	2.93 (1.82)	3.75 (2.33)	4.80 (2.98)
3000	2.03 (1.26)	3.02 (1.88)	3.88 (2.41)	4.96 (3.08)
3200	2.08 (1.29)	3.11 (1.93)	4.00 (2.48)	5.12 (3.18)
3400	2.13 (1.32)	3.19 (1.98)	4.11 (2.55)	5.27 (3.27)
3600	2.18 (1.35)	3.28 (2.04)	4.22 (2.62)	5.41 (3.36)
3800	2.22 (1.38)	3.36 (2.09)	4.33 (2.69)	5.55 (3.45)
4000	2.27 (1.41)	3.43 (2.13)	4.43 (2.75)	5.69 (3.53)

(G) For loaded subscriber loops, the 1 kHz loss shall be approximately 0.45 dB per 100 ohms of measured dc loop resistance. This loss shall be the measured loss less the net gain of any voice frequency repeaters in the circuit. Testing shall also be conducted to verify that the loss increases gradually as the frequency increases. The loss on H88 loaded loops should be down only slightly at 2.8 kHz but drop rapidly above 2.8 kHz. The loss on D66 loaded loops shall be fairly constant to about 3.4 kHz and there shall be good response at 4.0 kHz. When voice frequency repeaters are in the circuit there will be some frequency weighting in the build-out network and the loss at the higher frequencies will be greater than for nonrepeatered loops.

(H) For nonloaded subscriber loops, the 1 kHz loss shall be approximately 0.9 dB per 100 ohms of measured dc loop resistance. Testing shall also be conducted to verify that the loss is approximately a straight line function with no abrupt changes. The 3 kHz loss should be approximately 70% higher than the 1 kHz loss.

(ii) *Noise.* The principal objective related to circuit noise (noise-metallic) and the acceptance of new plant is that circuit noise levels be 20 dBrnc or less (decibels above reference noise, C-message weighted (a weighting derived from listening tests, to indicate the relative annoyance or speech impairment by an interfering signal of frequency (f) as heard through a ''500-type'' telephone set)). For most new, properly installed, plant construction, circuit noise will usually be considerably less than 20 dBrnc unless there are unusually long sections of telephone plant in parallel with electric power facilities and/or power influence of paralleling electric facilities is abnormally high. When circuit noise is

20 dBrnc or less, the loop plant shall be considered acceptable. When measured circuit noise is greater than 20 dBrnc, loop plant shall still be considered acceptable providing circuit balance (power influence reading minus circuit noise readings) is 60 dB or greater and power influence readings are 85 dBrnc or greater. When circuit noise is greater than 20 dBrnc and circuit balance is less than 60 dB and/or power influence is less than 85 dBrnc, loop plant shall not be considered acceptable and the loop plant shall be remedied to make circuit balance equal to or greater than 60 dB.

(7) *Data record.* Measurement data shall be recorded. A suggested format similar to Format I for subscriber loops in § 1755.407 or a format specified in the applicable construction contract may be used.

(8) *Probable causes for nonconformance.*—(i) *Insertion loss.* Some of the more common causes for failing to obtain the desired results may be due to reversed load coil windings, missing load coils, bridge taps between load coils, load coil spacing irregularities, excessive end sections, cables having high or low mutual capacitance, load coils having the wrong inductance, load coils inadvertently installed in nonloaded loops, moisture or water in cable, split pairs, and improperly spliced connections. The above factors can occur singularly or in combination. Experience to date indicates that the most common problems are missing load coils, reversed load coil windings or bridge taps.

(ii) *Noise.* Some of the common causes for failing to obtain the desired results may be due to high power influence from paralleling electrical power systems, poor telephone circuit balance, discontinuous cable shields, inadequate bonding and grounding of cable shields, high capacitance unbalance-to-ground of the cable pairs, high dc loop resistance unbalance, dc loop current less than 20 milliamperes, etc. The above factors can occur singularly or in combination. See TE&CM Section 451, Telephone Noise Measurement and Mitigation, for steps to be taken in reducing telecommunications line noise.

(f) *One-person open circuit measurement (subscriber loops).* (1) When specified by the borrower, open circuit measurements shall be made on all loaded and nonloaded subscriber loops upon completion of the cable work to verify that the plant is free from major impedance irregularities.

(2) For loaded loops, open circuit measurements shall be made using one of the following methods:

(i) Impedance or pulse return pattern, with cable pair trace compared to that of an artificial line of the same length and gauge. For best results, a level tracer or fault locator with dual trace capability is required;

(ii) Return loss using a level tracer, with cable pair compared to an artificial line of the same length and gauge connected in lieu of a Precision Balance Network (PBN). This method can be made with level tracers having only single trace capability; or

(iii) Open circuit structural return loss using a level tracer. This method can be made with level tracer having only single trace capability.

(3) Of the three methods suggested for loaded loops, the method specified in paragraph (f)(2)(ii) of this section is the preferred method because it can yield both qualitative and quantitative results. The methods specified in paragraphs (f)(2)(i) and (f)(2)(iii) of this section can be used as trouble shooting tools should irregularities be found during testing.

(4) For nonloaded loops, open circuit measurements shall be made using the method specified in paragraph (f)(2)(i) of this section.

(5) *Method of measurement.* Open circuit measurements shall be made at the CO on each loaded and nonloaded pair across the tip and ring terminals of the pair under test. All CO equipment shall be disconnected at the MDF for this test. For loaded loops containing voice frequency repeaters installed in the CO or field mounted, the open circuit measurement shall be made after the repeaters have been disconnected. Where field mounted repeaters are used, the open circuit measurement shall be made at the repeater location in both directions.

(i) *Impedance or pulse return pattern.* The step-by-step measurement procedure using the impedance or pulse return pattern for loaded and nonloaded loops shall be as shown in Figure 8. An artificial line of the same makeup as the cable to be tested shall be set up. The traces of the impedance or pulse return pattern from the cable pair and the artificial line shall be compared and should be essentially identical. If the impedance or pulse return traces from the cable pair are different than the artificial line trace, cable faults are possible. When the cable pair trace indicates possible defects, the defects should be identified and located. One method of identifying and locating defects involves introducing faults into the artificial line until its trace is identical with the cable trace.

(ii) *Return loss balanced to artificial line.* The step-by-step measurement procedure using the return loss balanced to artificial line for loaded loops shall be as shown in Figure 9. An artificial line of the same makeup as the cable to be tested shall be set up. The artificial line is connected to the external network terminals of the test set. The cable pair under test is compared to this standard. When defects are found, they should be identified and located by introducing faults into the artificial line. This is more difficult than with the method referenced in paragraph (f)(5)(i) of this section since this measurement is more sensitive to minor faults and only a single trace is used.

(iii) *Open circuit structural return loss using level tracer.* The step-by-step measurement procedure using the level tracer for loaded loops shall be as shown in Figure 10. The cable pair is compared to a PBN.

(6) *Test equipment.* Equipment for performing these tests is shown in Figures 8 through 10. For loaded loops, artificial loaded lines must be of the same gauge and loading scheme as the line under test. For nonloaded loops, artificial nonloaded lines must be of the same gauge as the line under test. Artificial lines should be arranged using switches or other quick connect arrangements to speed testing and troubleshooting. Figures 8 through 10 are as follows:

BILLING CODE 3410–15–P

FIGURE 8

ONE-PERSON OPEN CIRCUIT MEASUREMENT IMPEDANCE OR PULSE RETURN PATTERN

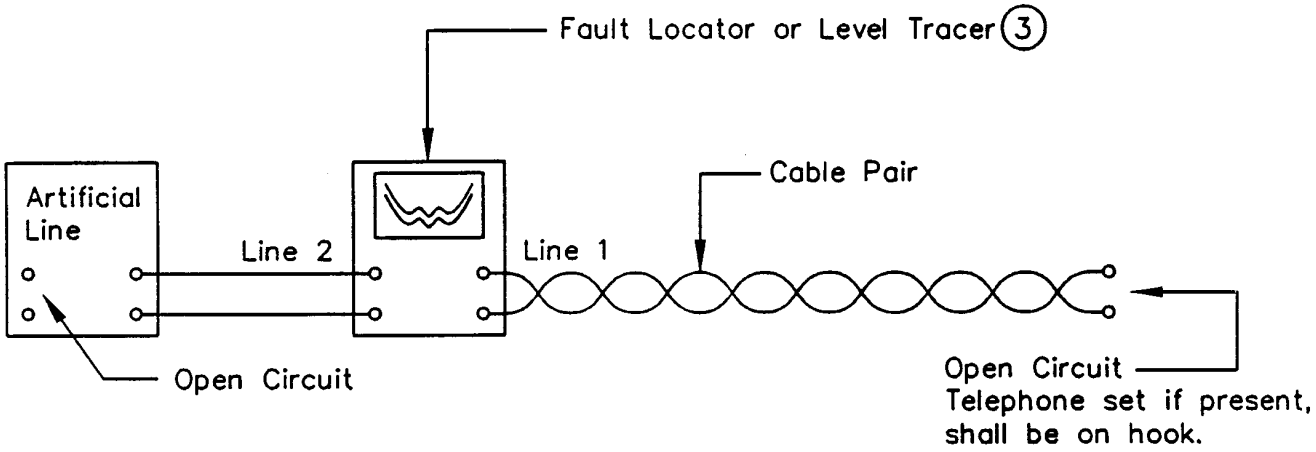

Measurement Procedure

1. Set up Artificial Line to same make-up [Length & Gauge(s)] as the cable pair.
2. Connect to test set (See Note (1)).
3. Connect cable pair to test set (See Note (1)).
4. Compare traces of Artificial Line and cable pair (2). They should be essentially identical. Differences indicate cable faults.
5. Location and type of fault may be determined by introducing faults in the Artificial Line until its trace is identical to that of the cable pair.

Notes:

(1.) Terminals to which cable pair and artificial line are attached shall be determined from the manufacturer's operating instructions. Proper settings for various switches and adjustments on the test set shall also be determined from the same source.

(2.) With test sets having trace storage capability only one set of terminals need be used. Connect Artificial Line to test set, store trace and disconnect line. Connect cable pair and compare trace to stored trace. To identify fault, store cable pair trace and connect Artificial Line. Introduce faults in the Artificial Line until traces are identical.

(3.) N.E.C.-17A, Biddle-CME110A-1, Dolcom-490, Tektronix-1503, Wilcom-T195, Wilcom-T132, or equivalent.

FIGURE 9

ONE-PERSON OPEN CIRCUIT MEASUREMENT RETURN LOSS BALANCED TO ARTIFICIAL LINE

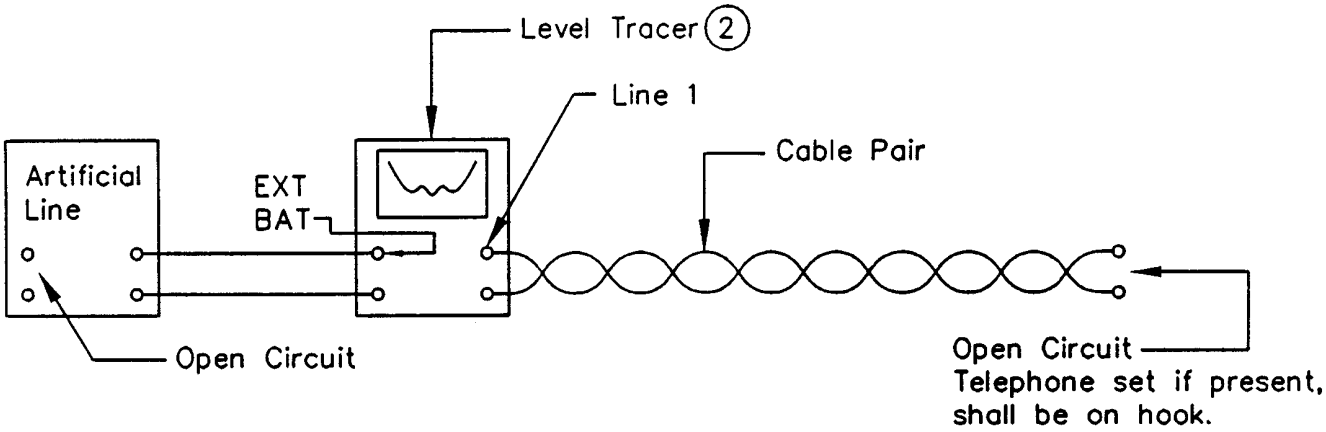

Measurement Procedure

1. Connect the test equipment and cable pair under test as shown above (See Note 1). Set up Artificial Line to same make-up [Length & Gauge(s)] as the cable pair.

2. Observe Return Loss from 200 to 3500 Hz (D66) or 200 to 3000 Hz (H88) noting maximum and minimum values. Note the value and frequency of the poorest (Lowest Numerical Value) SRL. (SRL becomes better as the readings become more negative). Record this value and frequency.

Notes:

(1.) Terminals to which cable pair and Artificial Line are attached shall be determined from the manufacturer's operating instructions. Proper settings for various switches and adjustments on the test set shall also be determined from the same source.

(2.) Wilcom-T132, Wilcom-T195, or equivalent.

FIGURE 10

ONE-PERSON OPEN CIRCUIT MEASUREMENT STRUCTURAL RETURN LOSS USING LEVEL TRACER

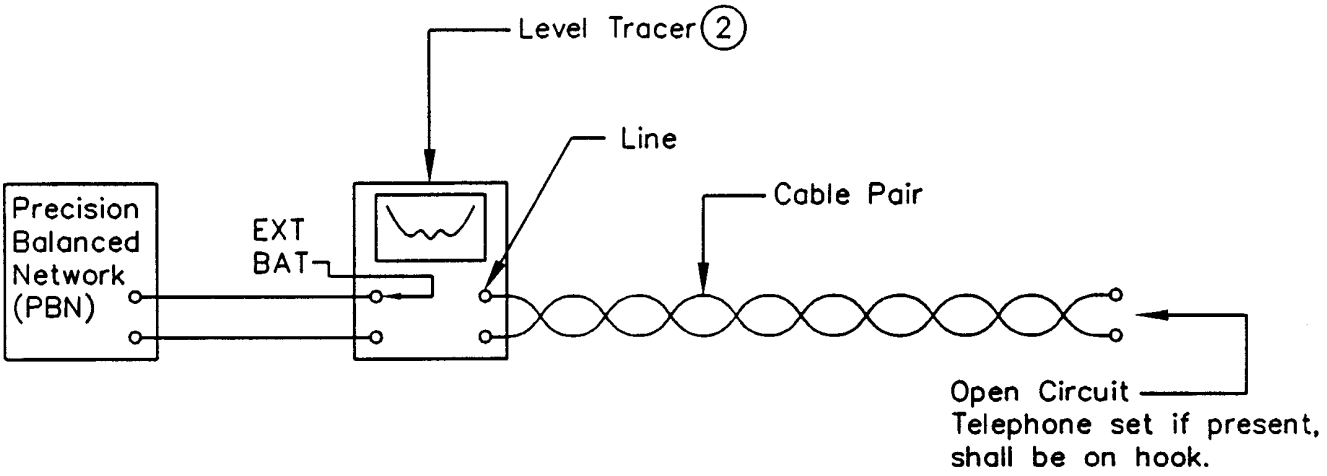

Measurement Procedure

1. Connect the test equipment and cable pair under test as shown above (See Note (1)). Set gauge of PBN for: Single Gauge – Same gauge as cable being measured; Mixed Gauge – Most predominant gauge adjacent to test set.

2. Observe Return Loss between 1000 and 3500 Hz (D66) or 1000 and 3000 Hz (H88) observing maximum and minimum values. Note the value and frequency of the poorest (Lowest Numerical Value) SRL. Single Gauge: Record this value. Mixed Gauge: Change gauge of PBN and note if SRL becomes better. (SRL becomes better as readings become more negative). If it does, record this value and frequency; if not, record value obtained with original gauge setting. (Varying gauge will be necessary, depending on actual cable layout, to obtain best SRL).

Notes:

(1.) Terminals to which cable pair and Artificial Line are attached shall be determined from the manufacturer's operating instructions. Proper settings for various switches and adjustments on the test set shall also be determined from the same source.

(2.) Wilcom–T132, Wilcom–T195, or equivalent.

BILLING CODE 3410–15–C

(7) *Applicable results.* (i) For loaded and nonloaded loops, the two traces in the pulse return pattern or impedance method (paragraph (f)(5)(i) of this section) shall be essentially identical. The degree of comparison required of the two traces is to be determined by experience.

(ii) For loaded loops, results for return loss measurements using a level tracer, with artificial line, in lieu of a PBN (paragraph (f)(5)(ii) of this section) shall meet the following requirements:

(A) For D66 and H88 loaded cables the structural return loss (SRL) values shall range between 28 and 39 dB, respectively, at the critical frequency of structural return loss (CFSRL) within the pass band of the loading system being used. The minimum SRL value for uniform gauge shall be 25 dB CFSRL. These SRL values apply for loaded cables of uniform gauge for the entire length of the subscriber loop circuit. Subscriber loop circuits shall meet the loading spacing deviations and the cable mutual capacitance requirements in the applicable RUS cable specifications;

(B) For mixed gauge loaded cables the SRL values shall be 25 and 27 dB CFSRL, respectively, and the minimum SRL value shall be 22 dB CFSRL; and

(C) The two traces in the pulse return pattern should be essentially identical. The degree of comparison required of the two traces is determined by experience.

(iii) For loaded loops, the results of open circuit structural return loss measurements using a level tracer (paragraph (f)(5)(iii) of this section) shall meet the following requirements. For D66 and H88 loaded cables with uniform or mixed gauges, the worst value allowed for measured open circuit structural return loss between 1,000–3,500 Hz and 1,000–3,000 Hz, respectively, shall be approximately 0.9 dB (round trip) for each 100 ohms outside plant dc loop resistance including the resistance of the load coils. The value of 0.9 dB per 100 ohms for the round trip loss remains reasonably accurate as long as:

(A) The subscriber end section of the loaded pair under test is approximately 2,250 ft (685 m) for D66 loading or 3,000 ft (914 m) for H88 loading in length; and

(B) The one-way 1,000 Hz loss does not exceed 10 dB.

(iv) For loaded loops, the measured value of open circuit structural return loss can only be as accurate as the degree to which the dc loop resistance of the loaded pair under test is known. Most accurate results shall be obtained when the dc loop resistance is known by actual measurements as described in paragraph (d) of this section. Furthermore, where the dc loop resistance is measured at the same time as the open circuit structural return loss, no correction for temperature is needed because the loss is directly proportional to the loop resistance. Where it is not practical to measure the dc loop resistance, it shall be calculated and corrected for temperature as specified in paragraph (d)(6)(ii) of this section. When measuring existing plant, care shall be taken to verify the accuracy of the records, if they are used for the calculation of the dc loop resistance. For buried plant, the temperature correction shall be based at the normal depth of the cable in the ground. (Temperature can be measured by boring a hole to cable depth with a ground rod, placing a thermometer in the ground at the cable depth, and taking and averaging several readings during the course of the resistance measurements.) For aerial cable it shall be based on the temperature inside the cable sheath.

(v) For loaded loops, the best correlation between the measured and the expected results shall be obtained when the cable is of one gauge, one size, and the far end section is approximately 2,250 ft (685 m) for D66 loading or 3,000 ft (914 m) for H88 loading. Mixing gauges and cable sizes will result in undesirable small reflections whose frequency characteristics and magnitude cannot be accurately predicted. In subscriber loop applications, cable gauge may be somewhat uniform but the cable pair size most likely will not be uniform as cable pair sizes taper off toward the customer access location and a downward adjustment of 1 dB of the allowed value shall be acceptable. ''Long'' end sections (as defined in TE&CM Section 424, ''Guideline for Telecommunications Subscriber Loop Plant'') lower the expected value, a further downward adjustment of 3 dB in the allowed value shall be acceptable.

(vi) For loaded loops, the limiting factor when making open circuit structural return loss measurements is when the 1,000 Hz one-way loss of the loaded cable pair under test becomes 10 dB or greater; it becomes difficult to detect the presence of irregularities beyond the 10 dB point on the loop. To overcome this difficulty, loaded loops having a one-way loss at 1,000 Hz greater than 10 dB shall be opened at some convenient point (such as a pedestal or ready access enclosure) and loss measurements at the individual portions measuring less than 10 dB one-way shall be made separately. When field mounted voice frequency repeaters are used, the measurement shall be made at the repeater location in both directions.

(8) *Data record*. (i) When performing a pulse return pattern or impedance open circuit measurement on loaded and nonloaded loops, a ''check mark'' indicating that the pair tests good or an ''X'' indicating that the pair does not test good shall be recorded in the SRL column. A suggested format similar to Format I for subscriber loops in § 1755.407 or a format specified in the applicable construction contract may be used.

(ii) When performing open circuit return loss measurements using the return loss balanced to an artificial line or return loss using a level tracer on loaded loops, the value of the poorest (lowest numerical value) SRL and its frequency in the proper column between 1,000 and 3,500 Hz for D66 loading or between 1,000 and 3,000 Hz for H88 loading shall be recorded. A suggested format similar to Format I for subscriber loops in § 1755.407 or a format specified in the applicable construction contract may be used.

(9) *Probable causes for nonconformance.* Some of the more common causes for failing to obtain the desired results may be due to reversed load coil windings, missing load coils, bridge taps between load coils, load coil spacing irregularities, excessive end sections, cables having high or low mutual capacitance, load coils inadvertently installed in nonloaded loops, moisture or water in the cable, load coils having the wrong inductance, split pairs, and improperly spliced connectors. The above can occur singularly or in combination. Experience to date indicates that the most common problems are missing load coils, reversed load coil windings or bridge taps.

(g) *Cable insertion loss measurement (carrier frequencies).* (1) When specified by the borrower, carrier frequency insertion loss measurements shall be made on cable pairs used for T1, T1C, and/or station carrier systems. Carrier frequency insertion loss shall be made on a minimum of three pairs. Select at least one pair near the outside of the core unit layup. If the three measured pairs are within 10% of the calculated loss in dB corrected for temperature, no further testing is necessary. If any of the measured pairs of a section are not within 10% of the calculated loss in dB, all pairs in that section used for carrier transmission shall be measured.

(2) *Method of measurement.* The step-by-step method of measurement shall be as shown in Figure 11.

(3) *Test equipment.* The test equipment is shown in Figure 11 as follows:

BILLING CODE 3410–15–P

FIGURE 11

CARRIER FREQUENCY INSERTION LOSS MEASUREMENT CABLE FACILITIES

Measurement

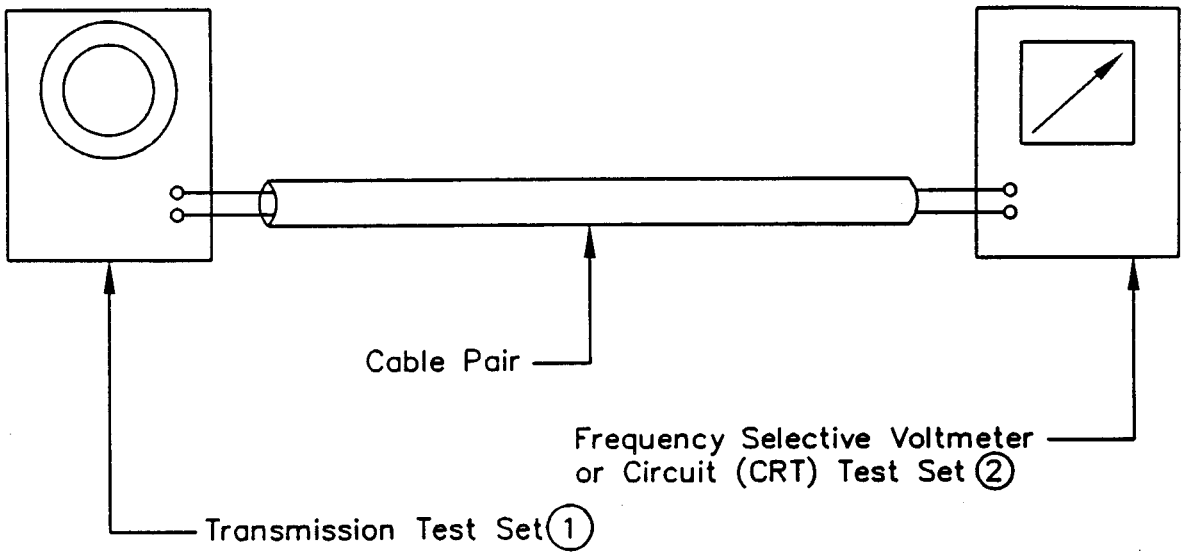

Measurement Procedure

1. Connect the transmission test set to one end of the length of cable to be measured and either the frequency selective voltmeter (FSVM) or CRT test set to the other end as shown.
2. Record the Insertion Loss in dB of the cable at each specified frequency.
3. The measured Insertion Loss of the cable should be within ± 10 percent of the calculated loss in dB when the loss is corrected for temperature.
4. Transmission test sets having an impedance between 100 and 135 ohms on the cable side are acceptable.

Notes:

1. H.P.–204B, H.P.–204C, H.P.–355, Siemens–W2057, or equivalent.
2. Wilcom–T136, Wilcom–T336, Wilcom–T337, Wilcom–T132B, Siemens–D2057, or equivalent.

BILLING CODE 3410–15–C

(4) *Applicable results.* (i) The highest frequency to be measured is determined by the type of carrier system. For T1 type carrier, the highest frequency is normally 772 kHz. For T1C type carrier, the highest frequency is normally 1576 kHz. The highest frequency to be measured for station carrier is 140 kHz.

(ii) The measured insertion loss of the cable shall be within ±10% of the calculated loss in dB when the loss is corrected for temperature.

(iii) The calculated insertion loss is computed as follows:

(A) Multiply the length of each different gauge by the applicable dB per unit length as shown in Table 7 or 8 as follows:

TABLE 7.—CABLE ATTENUATION @ 68 °F (20 °C) FILLED CABLES—SOLID INSULATION

Frequency (kHz)	Attenuation dB/mile (dB/km) Gauge (AWG)			
	19	22	24	26
10	2.8 (1.7)	4.8 (2.9)	6.4 (3.9)	8.5 (5.3)
20	3.2 (2.0)	5.8 (3.6)	8.2 (5.1)	11.2 (6.9)
40	3.6 (2.2)	6.5 (4.0)	9.6 (6.0)	13.9 (8.6)
60	4.0 (2.5)	6.9 (4.2)	10.3 (6.4)	15.2 (9.4)
80	4.5 (2.8)	7.3 (4.5)	10.7 (6.6)	16.0 (9.9)
100	4.9 (3.0)	7.7 (4.7)	11.1 (6.8)	16.5 (10.2)
112	5.2 (3.2)	8.0 (4.9)	11.3 (7.0)	16.8 (10.5)
120	5.4 (3.3)	8.1 (5.0)	11.5 (7.1)	17.0 (10.6)
140	5.8 (3.6)	8.6 (5.3)	11.9 (7.4)	17.4 (10.8)
160	6.2 (3.8)	9.0 (5.6)	12.3 (7.6)	17.8 (11.1)
180	6.6 (4.1)	9.5 (5.9)	12.7 (7.9)	18.2 (11.3)
200	7.0 (4.3)	10.0 (6.2)	13.2 (8.2)	18.6 (11.5)
300	8.7 (5.4)	12.2 (7.5)	15.4 (9.6)	20.6 (12.8)
400	10.0 (6.2)	14.1 (8.8)	17.7 (11.0)	22.9 (14.2)
500	11.2 (6.9)	15.9 (9.8)	19.8 (12.3)	25.2 (15.6)
600	12.2 (7.5)	17.5 (10.9)	21.8 (13.6)	27.4 (17.0)
700	13.2 (8.2)	19.0 (11.8)	23.6 (14.7)	29.6 (18.4)
772	13.8 (8.5)	19.9 (12.4)	24.8 (15.4)	31.4 (19.5)
800	14.2 (8.8)	20.1 (12.5)	27.4 (17.1)	31.7 (19.7)
900	14.8 (9.2)	21.6 (13.4)	29.0 (18.0)	33.8 (21.0)
1000	15.8 (9.8)	22.7 (14.1)	31.1 (19.3)	35.9 (22.3)
1100	16.4 (10.2)	23.8 (14.8)	32.7 (20.3)	38.0 (23.6)
1200	17.4 (10.8)	24.8 (15.4)	34.3 (21.3)	40.0 (24.9)
1300	17.9 (11.1)	25.9 (16.1)	35.4 (22.0)	41.7 (25.9)
1400	19.0 (11.8)	26.9 (16.7)	37.0 (23.0)	43.3 (26.9)
1500	19.5 (12.1)	28.0 (17.4)	38.0 (23.6)	44.3 (27.6)
1576	20.1 (12.4)	29.0 (18.0)	39.0 (24.3)	44.4 (28.2)

TABLE 8.—CABLE ATTENUATION @ 68 °F (20 °C) FILLED CABLES—EXPANDED INSULATION

Frequency (kHz)	Attenuation dB/mile (dB/km) Gauge (AWG)			
	19	22	24	26
10	3.0 (1.8)	4.9 (3.0)	6.5 (4.0)	8.6 (5.3)
20	3.5 (2.1)	6.0 (4.1)	8.5 (5.2)	11.5 (7.1)
40	4.0 (2.5)	7.0 (4.3)	10.2 (6.3)	14.4 (8.9)
60	4.5 (2.8)	7.5 (4.6)	11.1 (6.8)	16.0 (9.9)
80	5.2 (3.3)	7.9 (4.9)	11.3 (6.9)	16.2 (10.1)
100	5.8 (3.6)	8.4 (5.2)	11.6 (7.2)	16.4 (10.2)
112	6.0 (3.8)	8.8 (5.4)	11.9 (7.4)	16.6 (10.3)
120	6.2 (3.9)	9.0 (5.6)	12.1 (7.5)	16.9 (10.5)
140	6.6 (4.1)	9.5 (5.9)	12.7 (7.9)	17.2 (10.7)
160	6.9 (4.3)	10.0 (6.2)	13.2 (8.2)	17.4 (10.8)
180	7.4 (4.6)	10.6 (6.6)	13.7 (8.5)	17.9 (11.1)
200	7.9 (4.9)	11.1 (6.9)	14.2 (8.8)	18.5 (11.5)
300	9.5 (5.9)	13.2 (8.2)	16.8 (10.5)	21.6 (13.4)
400	11.1 (6.9)	15.3 (9.5)	19.5 (12.1)	24.3 (15.1)
500	12.1 (7.5)	17.9 (11.1)	22.2 (13.8)	27.4 (17.1)
600	13.7 (8.5)	19.5 (12.1)	24.3 (15.1)	29.6 (18.4)
700	14.8 (9.2)	21.1 (13.1)	26.4 (16.4)	32.2 (20.0)
772	15.3 (9.5)	21.6 (13.4)	27.4 (17.1)	33.8 (21.90)
800	15.8 (9.8)	22.2 (13.8)	28.0 (17.4)	34.4 (21.3)
900	17.0 (10.5)	23.8 (14.8)	29.6 (18.4)	36.4 (22.6)
1000	17.4 (10.8)	24.8 (15.4)	31.1 (19.3)	38.5 (23.9)
1100	17.9 (11.1)	26.4 (16.4)	33.3 (20.7)	40.6 (25.3)
1200	19.0 (11.8)	27.4 (17.1	34.3 (21.3)	42.2 (26.2)
1300	19.5 (12.1)	28.5 (17.7)	35.9 (22.3)	43.8 (27.2)
1400	20.1 (12.5	29.6 (18.4)	37.0 (23.0)	45.9 (28.5)
1500	20.6 (12.8)	30.6 (19.0)	38.5 (23.9)	47.5 (29.5)
1576	21.6 (13.4)	31.1 (19.3)	39.1 (24.3)	48.6 (30.2)

(B) Add the individual losses for each gauge to give the total calculated insertion loss at a temperature of 68°F (20°C);

(C) Correct the total calculated insertion loss at the temperature of 68°F (20°C) to the measurement temperature by the following formulae:

$A_t = A_{68} \times [1 + 0.0012 \times (t - 68)]$ for English Units

$A_t = A_{20} \times [1 + 0.0022 \times (t - 20)]$ for Metric Units

Where:

A_t = Insertion loss at the measurement temperature in dB.

A_{68} = Insertion loss at a temperature of 68°F in dB.

A_{20} = Insertion loss at a temperature of 20°C in dB.

t = Measurement temperature in °F or (°C); and

(D) Compare the calculated insertion loss at the measurement temperature to the measured insertion loss to determine compliance with the requirement specified in paragraph (g)(4)(ii) of this section. (**Note:** Attenuation varies directly with temperature. For each ±10°F (5.6°C) change in temperature increase or decrease the attenuation by ±1%.)

(iv) If the measured value exceeds the ±10% allowable variation, the cause shall be determined and corrective action shall be taken to remedy the problem.

(5) *Data record*. Results of carrier frequency insertion loss measurements for station, T1, and/or T1C type carrier shall be recorded. Suggested formats similar to Format III, Outside Plant Acceptance Tests—T1 or T1C Carrier Pairs, and Format IV, Outside Plant Acceptance Tests—Station Carrier Pairs, in § 1755.407 or formats specified in the applicable construction contract may be used.

(6) *Probable causes for nonconformance*. If the measured loss is low, the cable records are likely to be in error. If the measured loss is high, there may be bridge taps, load coils or voice frequency build-out capacitors connected to the cable pairs or the cable records may be in error. Figures 12 and 13 are examples that show the effects of bridge taps and load coils in the carrier path. Figures 12 and 13 are as follows:

BILLING CODE 3410–15–P

FIGURE 12

EFFECTS OF BRIDGE TAPS ON ATTENUATION

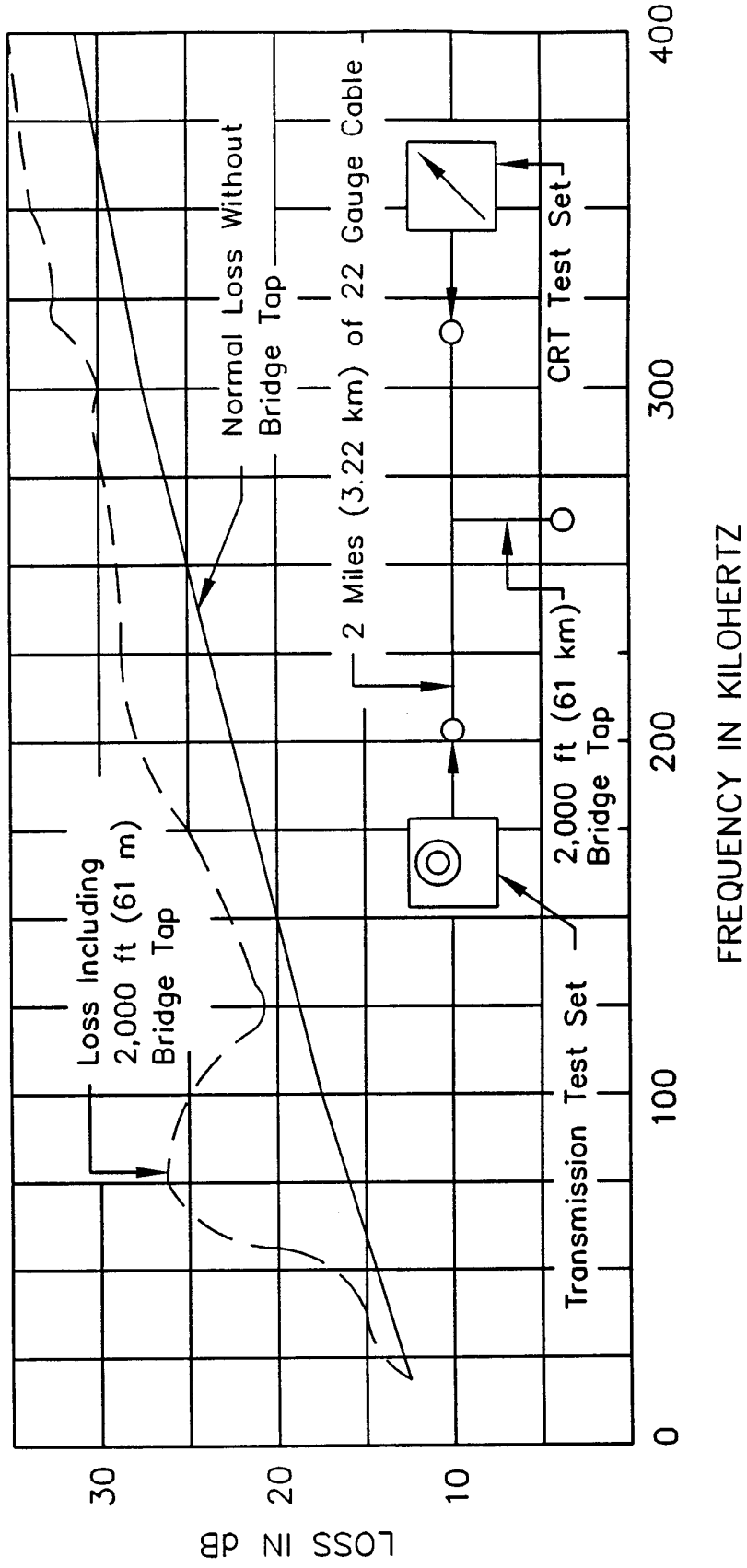

FIGURE 13

EFFECTS OF LOADING COILS ON ATTENUATION

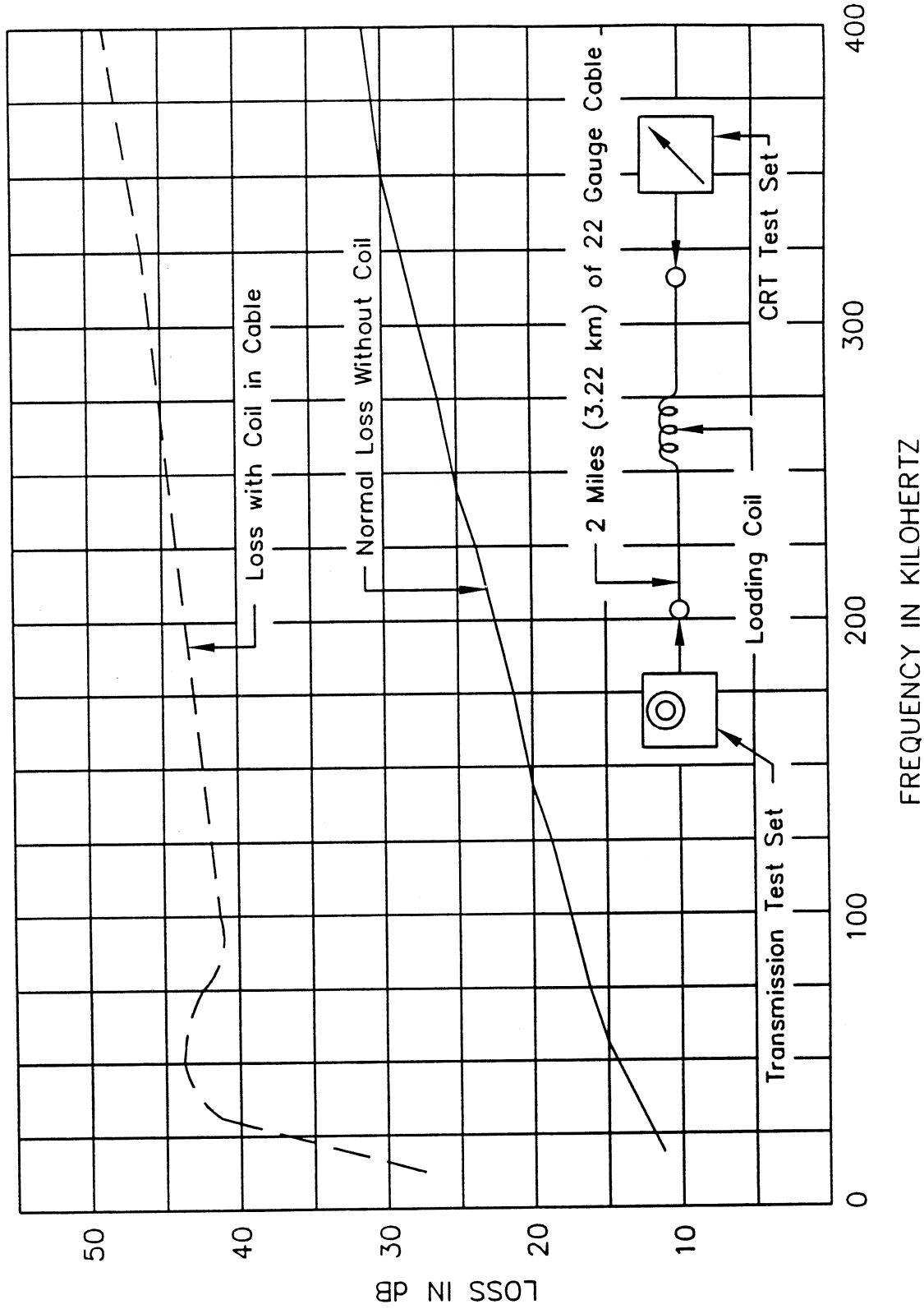

BILLING CODE 3410–15–C

§ 1755.404 Fiber optic cable telecommunications plant measurements.

(a) *Armor continuity.* (1) Tests and measurements shall be made to ensure that the armor of fiber optic cables is continuous. There are two areas of concern. The first is armor bonding within a splice and the second is armor continuity between splices.

(2) Measurement techniques outlined here for verification of armor continuity are applicable to buried fiber optic cable plant. Measurements of armor continuity between splices in aerial, armored, fiber optic cable should be made prior to completion of splicing. Conclusive results cannot be obtained on aerial plant after all bonds have been completed to the supporting strand, multigrounded neutral, etc.

(3) *Method of measurement.* Armor continuity within splices shall be measured with a cable shield splice continuity test set. The step-by-step measurement procedure outlined in the manufacturer's operating instructions for the specific test equipment being used shall be followed.

(4) *Test equipment.* A cable shield splice continuity tester shall be used to measure armor continuity within splices.

(5) *Applicable results.* When utilizing shield continuity testers to measure armor continuity within splices, refer to the manufacturer's published information covering the specific test equipment to be used and for anticipated results.

(6) *Data record.* Measurement data from armor continuity tests shall be recorded together with anticipated values in an appropriate format to permit comparison. The recorded data shall include specific location, cable size, and cable type, if known, etc.

(7) *Probable causes for nonconformance.* Among probable causes for nonconformance are broken or damaged armors, bad bonding harnesses, poorly connected bonding clamps, loose bonding lugs, etc.

(b) *Fiber optic splice loss measurement.* (1) After placement of all fiber optic cable plant has been completed and spliced together to form a continuous optical link between end termination points, splice loss measurements shall be performed on all field and central office splice points.

(2) *Method of measurement.* (i) Field splice loss measurements shall be made between the end termination points at 1310 and/or 1550 nanometers for single mode fibers and in accordance with Figure 14. Two splice loss measurements shall be made between the end termination points. The first measurement shall be from termination point A to termination point B. The second measurement shall be from termination point B to termination point A.

(ii) CO splice loss measurements shall be made at 1310 and/or 1550 nanometers for single mode fibers and in accordance with Figure 15. Two splice loss measurements shall be made between the end termination points. The first measurement shall be from termination point A to termination point B. The second measurement shall be from termination point B to termination point A.

(3) *Test equipment.* The test equipment is shown in Figures 14 and 15. The optical time domain reflectometer (OTDR) used for the testing should have dual wave length capability. Figures 14 and 15 are as follows:

BILLING CODE 3410–15–P

FIGURE 14

FIBER OPTIC FIELD SPLICE LOSS MEASUREMENT

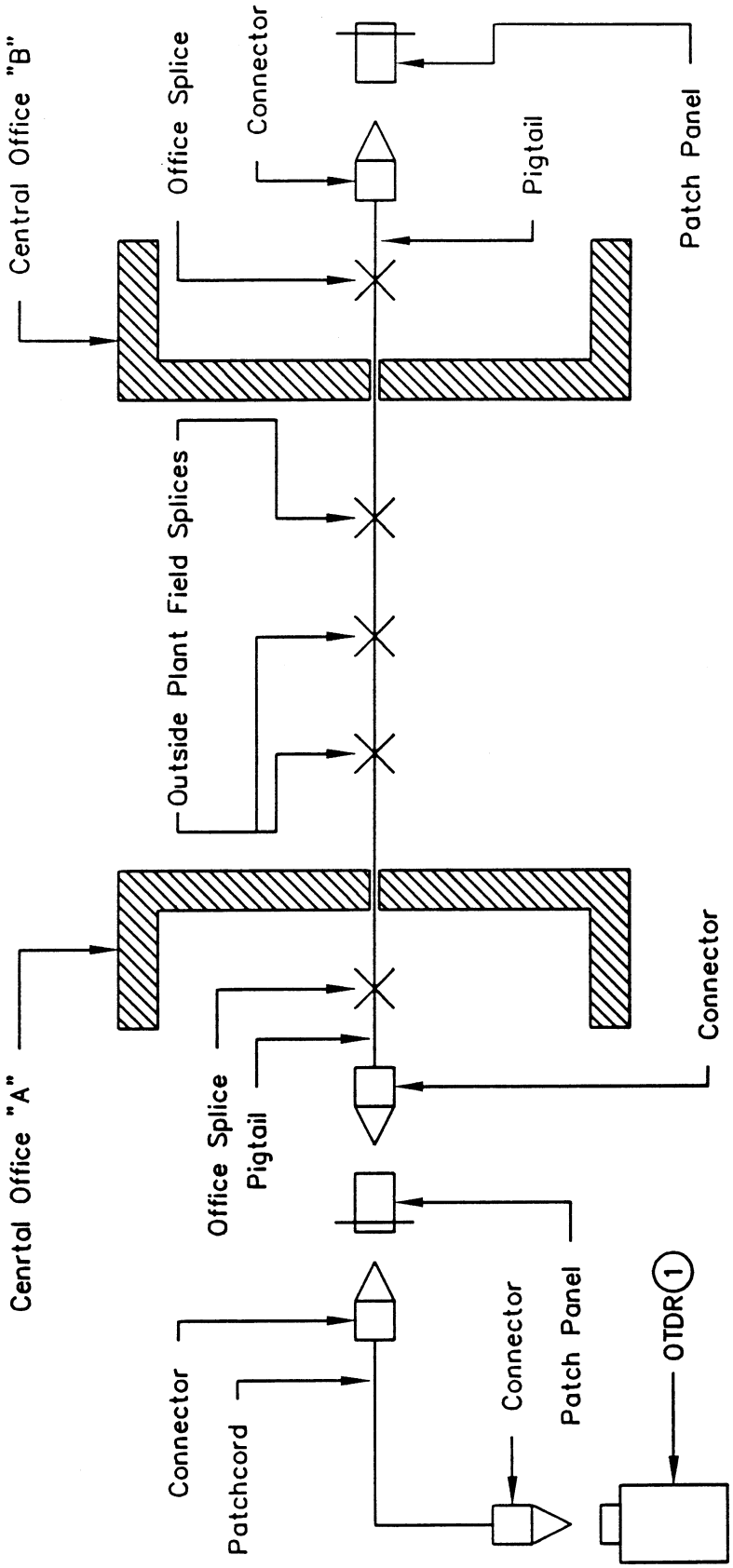

Note:

(1.) Tektronix–TFP2, H.P.–8146A, Opto–Electronics–DFM10, Photo Kinetics–6000, or equivalent.

FIGURE 15

FIBER OPTIC CENTRAL OFFICE SPLICE LOSS MEASUREMENT

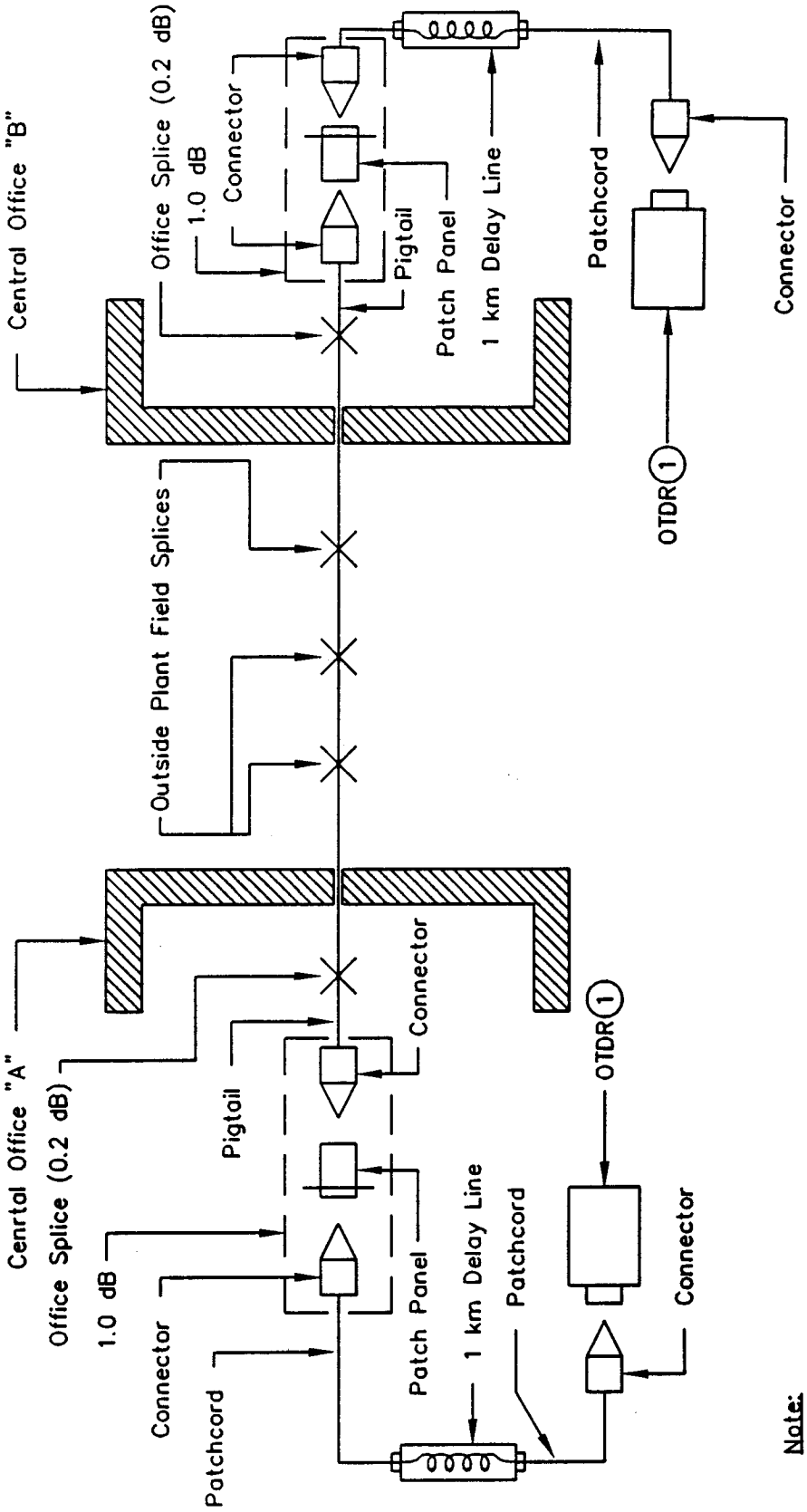

Note:

(1.) Tektronix–TFP2, H.P.–8146A, Opto–Electonics–DFM10, Photo Kinetics–6000, or equivalent.

BILLING CODE 3410–15–C

(4) *Applicable results.* (i) The splice loss for each single mode field splice shall be the bi-directional average of the two OTDR readings. To calculate the actual splice loss, substitute the OTDR readings maintaining the sign of the loss (+) or apparent gain (−) into the following equation:

FIGURE 16

END-TO-END FIBER OPTIC ATTENUATION MEASUREMENT SHOWING MEASUREMENT IN ONE DIRECTION ONLY (2)

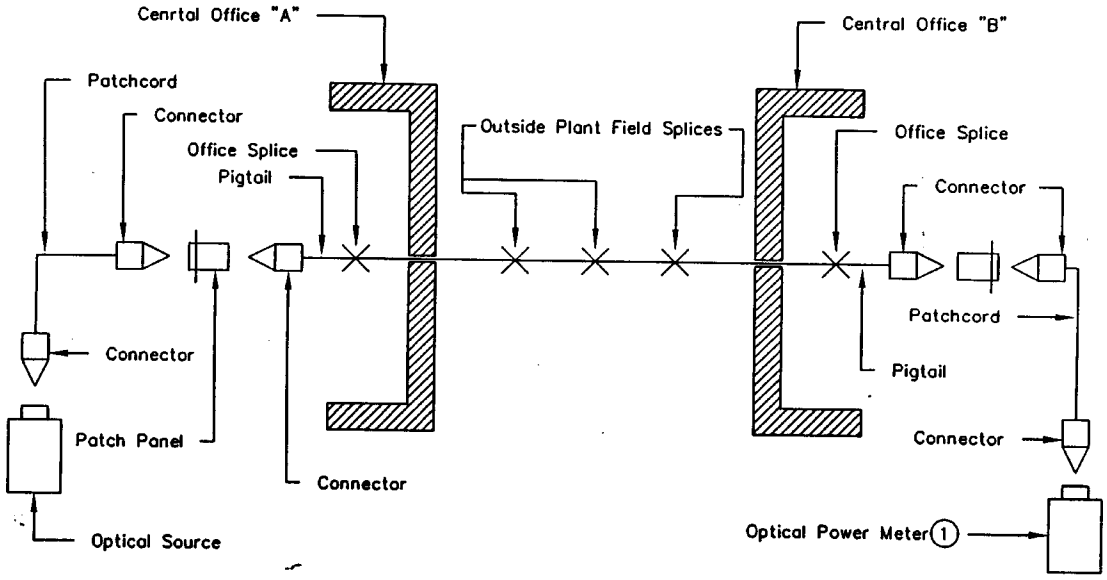

Notes:

(1) H.P.-8153A, Tektronix-OCP5002, Telecommunications Techniques Corp.-131, or equivalent.

(2) Measurement is repeated by reversing location of the optical source and optical power meter in the respective central offices.

(ii) When specified in the applicable construction contract, the splice loss of each field splice at 1310 and/or 1550 nanometers shall not exceed the limit specified in the contract.

(iii) When no limit is specified in the applicable construction contract, the splice loss of each field splice shall not exceed 0.2 dB at 1310 and/or 1550 nanometers.

(iv) The splice loss for each single mode CO splice shall be the bi-directional average of the two OTDR reading. To calculate actual splice loss, substitute the OTDR reading, maintaining the sign of the loss (+) or apparent gain (−), into the equation specified in paragraph (b)(4)(i) of this section.

(v) When specified in the applicable construction contract, the splice loss of each central office splice at 1310 and/or 1550 nanometers shall not exceed the limit specified in the contract.

(vi) When no limit is specified in the applicable construction contract, the splice loss of each central office splice shall not exceed 1.2 dB at 1310 and/or 1550 nanometers.

(5) *Data record.* The measurement data shall be recorded. A suggested format similar to Format V, Outside Plant Acceptance Test—Fiber Optic Telecommunications Plant, in § 1755.407 or a format specified in the applicable construction contract may be used.

(6) *Probable causes for nonconformance.* When the results of the splice loss measurements exceed the specified limits the following factors should be checked:

(i) Proper end preparation of the fibers;

(ii) End separation between the fiber ends;

(iii) Lateral misalignment of fiber cores;

(iv) Angular misalignment of fiber cores;

(v) Fresnel reflection;

(vi) Contamination between fiber ends;

(vii) Core deformation; or

(viii) Mode-field diameter mismatch.

(c) *End-to-end attenuation measurement.* (1) After placement of all fiber optic cable plant has been completed and spliced together to form a continuous optical link between end termination points, end-to-end attenuation measurements shall be performed on each optical fiber within the cable.

(2) *Method of measurement.* For single mode fibers, the end-to-end attenuation measurements of each optical fiber at 1310 and/or 1550 nanometers in each direction between end termination points shall be performed in accordance with Figure 16.

(3) *Test equipment.* The test equipment is shown in Figure 16 as follows:

BILLING CODE 3410–15–P

FIGURE 16

END–TO–END FIBER OPTIC ATTENUATION MEASUREMENT SHOWING MEASUREMENT IN ONE DIRECTION ONLY (2)

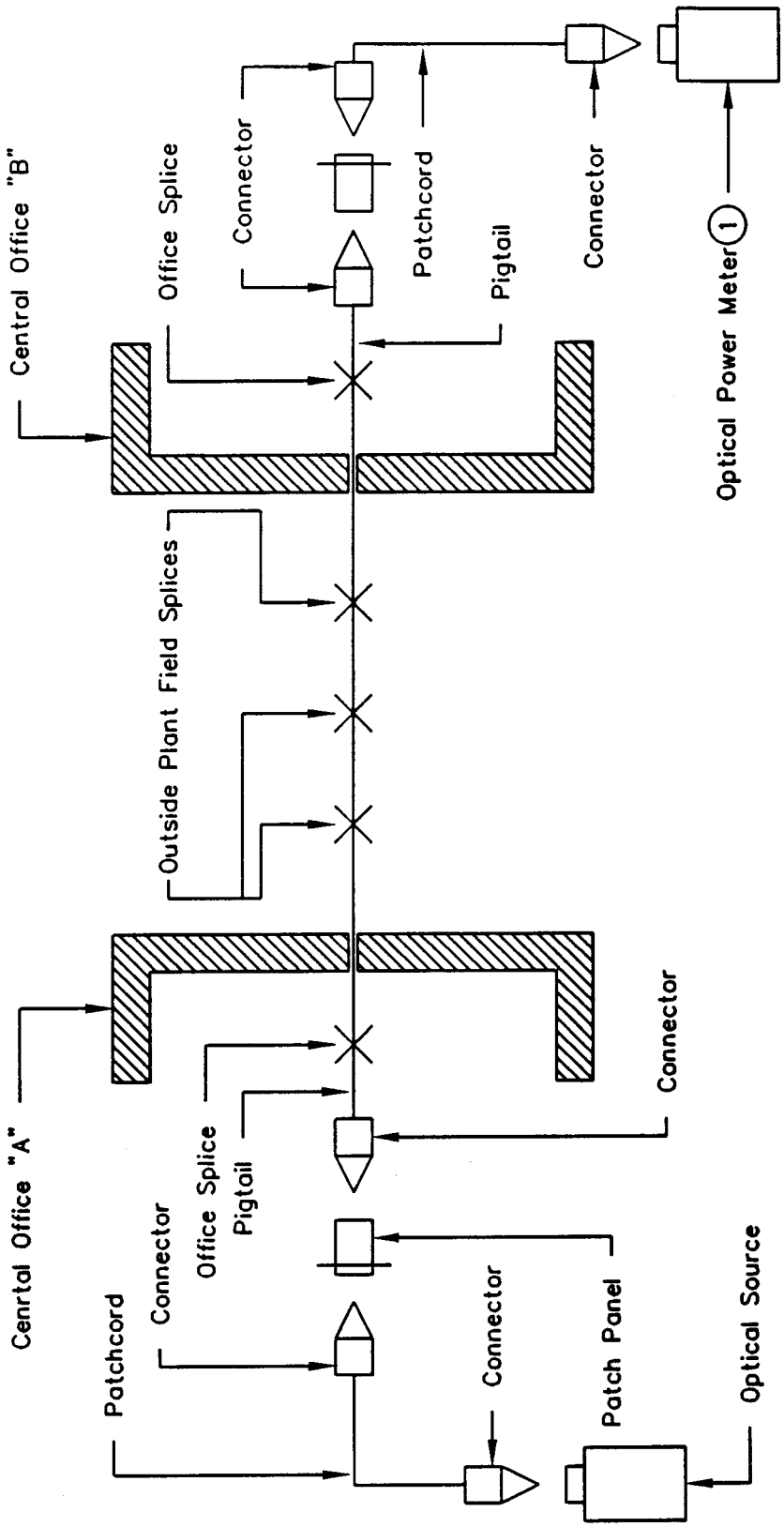

Notes:

(1) H.P.–8153A, Tektronix–OCP5002, Telecommunications Techniques Corp.–131, or equivalent.

(2) Measurement is repeated by reversing location of the optical source and optical power meter in the respective central offices.

BILLING CODE 3410–15–C

(4) *Applicable results.* The end-to-end attenuation of each single mode optical fiber at 1310 and/or 1550 nanometers shall not exceed the limits specified in the applicable construction contract.

(5) *Data record.* The measurement data shall be recorded. A suggested format similar to Format V for fiber optic telecommunications plant in § 1755.407 or on a format specified in the applicable construction contract may be used.

(6) *Probable causes for nonconformance.* Failure of each optical fiber to meet the end-to-end attenuation limit could be attributed to the following:

(i) Excessive field or central office splice loss;

(ii) Excessive cable attenuation; or

(iii) Damage to the fiber optic cable during installation.

(d) *End-to-end fiber signature measurement.* (1) After placement of all fiber optic cable plant has been completed and spliced together to form a continuous optical link between end termination points, end-to-end fiber signature testing shall be performed on each optical fiber within the cable.

(2) *Method of measurement.* For single mode fibers, the end-to-end fiber signature measurement of each optical fiber in each direction shall be performed between end termination points at 1310 and/or 1550 nanometers in accordance with Figure 17.

(3) *Test equipment.* The test equipment is shown in Figure 17 as follows:

BILLING CODE 3410–15–P

FIGURE 17

END–TO–END FIBER OPTIC SIGNATURE MEASUREMENT SHOWING MEASUREMENT IN ONE DIRECTION ONLY ②

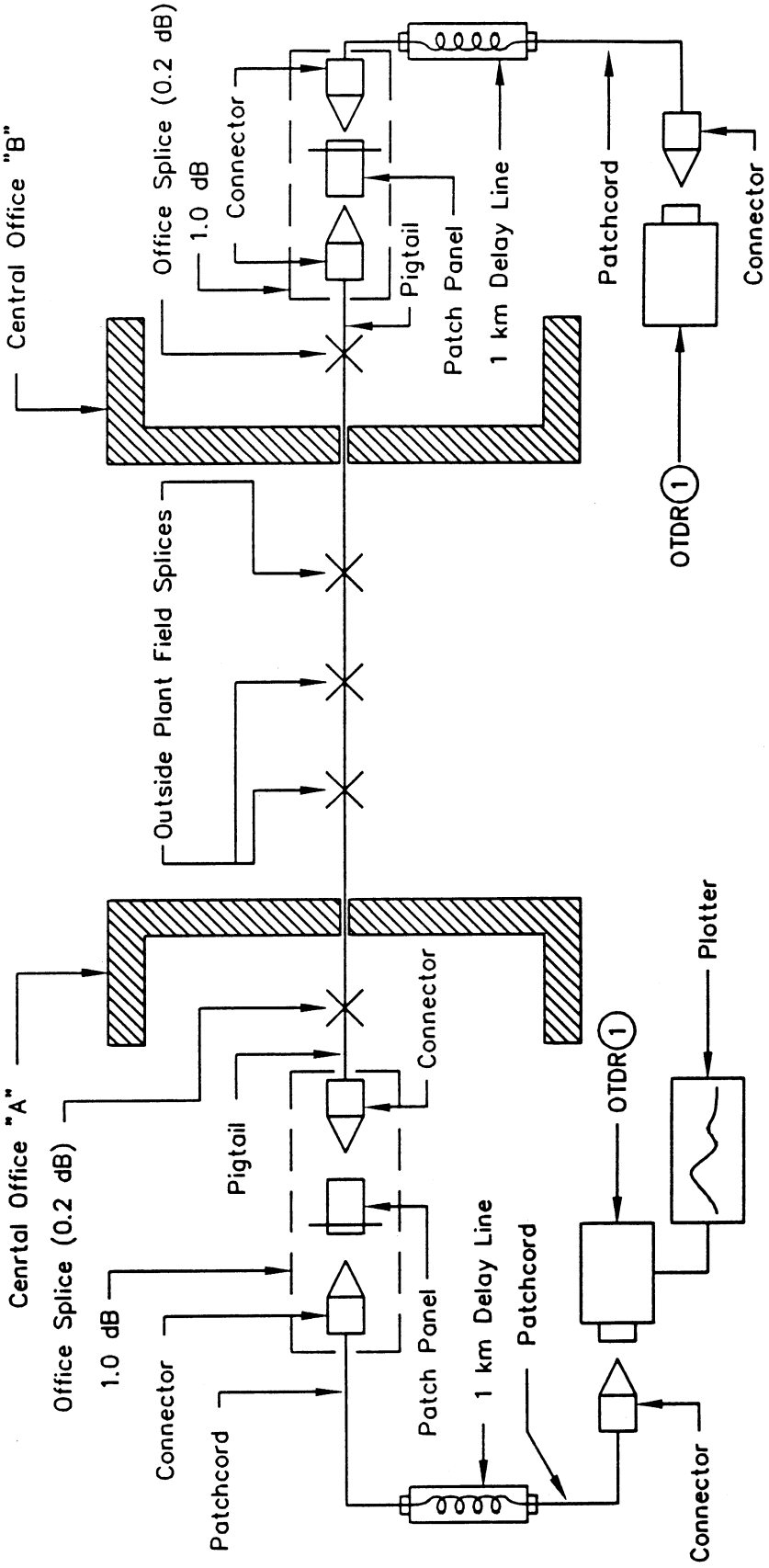

Notes:

① Tektronix–TFP2, H.P.–8146A, Opto–Electonics–DFM10, Photo Kinetics–6000, or equivalent.

② Measurement is repeated by reversing location of optical source and optical power meter in the respective central offices.

BILLING CODE 3410–15–C

(4) *Applicable results.* The appearance of each optical fiber between end termination points.

(5) *Data record.* Plot the trace of each optical fiber and retain as a permanent record for future comparison if needed.

(6) *Probable causes for nonconformance.* None.

§ 1755.405 Voiceband data transmission measurements.

(a) The data transmission measurements listed in this section shall be used to determine the acceptability of trunk and nonloaded subscriber loop circuits for data modem transmission.

(b) *Signal-to-C notched noise (S/CNN) measurement.* (1) When specified by the borrower, S/CNN measurements shall be made on trunk circuits and nonloaded subscriber loops. For trunk circuits, the measurement shall be made between CO locations. For nonloaded subscriber loops, the measurement shall be made from the CO to the station protector of the NID at the customer's access location.

(2) S/CNN is the logarithmic ratio expressed in dB of a 1,004 Hz holding tone signal compared to the C-message weighted noise level. S/CNN is one of the most important transmission parameters affecting the performance of data transmission because proper modem operation requires low noise relative to received power level. Since modulated carriers are used in data communication systems, noise measurements need to be performed with power on the connection to activate equipment having signal-level-dependent noise sources. For 4 kHz channels, a 1,004 Hz holding tone is used to activate the signal-dependent equipment on the channel or connection.

(3) *Method of measurement.* The S/CNN measurement shall be made using a 1,004 Hz holding tone at −13 dBm0 (decibels relative to one milliwatt, referred to a zero transmission level point) and performed in accordance with American National Standards Institute (ANSI) T1.506–1990, American National Standard for Telecommunications—Network Performance—Transmission Specifications for Switched Exchange Access Network including supplement ANSI T1.506a–1992, and American National Standards Institute/Institute of Electrical and Electronics Engineers (ANSI/IEEE) 743–1984, IEEE Standard Methods and Equipment for Measuring the Transmission Characteristics of Analog Voice Frequency Circuits. The ANSI T1.506–1990, American National Standard for Telecommunications—Network Performance—Transmission Specifications for Switched Exchange Access Network is incorporated by reference in accordance with 5 U.S.C. 522(a) and 1 CFR part 51. Copies of ANSI T1.506–1990 are available for inspection during normal business hours at RUS, room 2845, U.S. Department of Agriculture, STOP 1598, Washington, DC 20250–1598 or at the Office of the Federal Register, 800 North Capitol Street, NW., suite 700, Washington, DC. Copies are available from ANSI, Customer Service, 11 West 42nd Street, New York, New York 10036, telephone number (212) 642–4900. The ANSI/IEEE 743–1984, IEEE Standard Methods and Equipment for Measuring the Transmission Characteristics of Analog Voice Frequency Circuits is incorporated by reference in accordance with 5 U.S.C. 522(a) and 1 CFR part 51. Copies of ANSI/IEEE 743–1984 are available for inspection during normal business hours at RUS, room 2845, U.S. Department of Agriculture, STOP 1598, Washington, DC 20250–1598 or at the Office of the Federal Register, 800 North Capitol Street, NW., suite 700, Washington, DC. Copies are available from ANSI, Customer Service, 11 West 42nd Street, New York, New York 10036, telephone number (212) 642–4900.

(4) *Test equipment.* The equipment for performing the measurement shall be in accordance with ANSI/IEEE 743–1984.

(5) *Applicable results.* The S/CNN for both trunk and nonloaded subscriber loop circuits shall not be less than 31 dB.

(6) *Data record.* The measurement data shall be recorded. Suggested formats similar to Format VI, Voiceband Data Transmission Tests—Nonloaded Subscriber Loops, and Format VII, Voiceband Data Transmission Tests—Trunk Circuits, in § 1755.407 or formats specified in the applicable construction contract may be used.

(7) *Probable causes for nonconformance.* Some of the causes for failing to obtain the desired results may be due to excessive harmonic distortion, quantizing noise, phase and amplitude jitter, and loss in digital pads used for level settings.

(c) *Signal-to-intermodulation distortion (S/IMD) measurement.* (1) When specified by the borrower, S/IMD measurements shall be made on trunk circuits and nonloaded subscriber loops. For trunk circuits, the measurement shall be made between CO locations. For nonloaded subscriber loops, the measurement shall be made from the CO to the station protector of the NID at the customer's access location.

(2) S/IMD is a measure of the distortion produced by extraneous frequency cross products, known as intermodulation products, when a multi-tone tone signal is applied to a system.

(3) Intermodulation distortion (IMD) is caused by system nonlinearities acting upon the harmonic frequencies produced from an input of multiple tones. The products resulting from IMD can be more damaging than noise in terms of producing data transmission errors.

(4) IMD is measured as a signal to distortion ratio and is expressed as the logarithmic ratio in dB of the composite power of four resulting test frequencies to the total power of specific higher order distortion products that are produced. The higher order products are measured at both the 2nd order and 3rd order and are designated R2 and R3, respectively. The four frequency testing for IMD is produced with four tones of 857, 863, 1,372, and 1,388 Hz input at a composite power level of −13 dBm0.

(5) *Method of measurement.* The S/IMD measurement shall be performed in accordance with ANSI T1.506–1990 and ANSI/IEEE 743–1984.

(6) *Test equipment.* The equipment for performing the measurement shall be in accordance with ANSI/IEEE 743–1984.

(7) *Applicable results.* The 2nd order (R2) S/IMD for both trunk and nonloaded subscriber loop circuits shall not be less than 40 dB. The 3rd order (R3) S/IMD for both trunk and nonloaded subscriber loop circuits shall not be less than 40 dB.

(8) *Data record.* The measurement data shall be recorded. Suggested formats similar to Format VI for nonloaded subscriber loops and Format VII for trunk circuits in § 1755.407 or formats specified in the applicable construction contract may be used.

(9) *Probable causes for nonconformance.* Some of the causes for failing to obtain the desired results may be due to channel nonlinearities, such as compression and clipping, which cause harmonic and intermodulation distortion in a voiceband signal.

(d) *Envelope delay distortion (EDD) measurement.* (1) When specified by the borrower, EDD measurements shall be made on trunk circuits and nonloaded subscriber loops. For trunk circuits, the measurement shall be made between CO locations. For nonloaded subscriber loops, the measurement shall be made from the CO to the station protector of the NID at the customer's access location.

(2) EDD is a measure of the linearity or uniformity of the phase versus frequency characteristics of a transmission facility. EDD is also known as relative envelope delay (RED).

(3) EDD is specifically defined as the delay relative to the envelope delay at the reference frequency of 1,704 Hz. EDD is typically measured at two frequencies, one low and one high in the voiceband. The low frequency measurement is made at 604 Hz. The high frequency measurement is made at 2,804 Hz.

(4) *Method of measurement.* The EDD measurement shall be performed in accordance with ANSI T1.506–1990 and ANSI/IEEE 743–1984.

(5) *Test equipment.* The equipment for performing the measurement shall be in accordance with ANSI/IEEE 743–1984.

(6) *Applicable results.* The EDD for both trunk and nonloaded subscriber loop circuits at the low frequency of 604 Hz shall not exceed 1,500 microseconds. The EDD for both trunk and nonloaded subscriber loop circuits at the high frequency of 2,804 Hz shall not exceed 1,000 microseconds.

(7) *Data record.* The measurement data shall be recorded. Suggested formats similar to Format VI for nonloaded subscriber loops and Format VII for trunk circuits in § 1755.407 or formats specified in the applicable construction contract may be used.

(8) *Probable causes for nonconformance.* Some of the causes for failing to obtain the desired results may be due to nonlinearity of the phase versus frequency characteristic of the transmission facility. This nonlinear phase versus frequency characteristic of the transmission facility causes the various frequency components to travel at different transit times which results in successively transmitted data pulses to overlap at the receive end. The overlapping of the pulses at the receive end results in distortion of the received signal. Excessive EDD on the transmission facility may be reduced using data modems with equalization or by conditioning the transmission line.

(e) *Amplitude jitter (AJ) measurement.* (1) When specified by the borrower, AJ measurements shall be made on trunk circuits and nonloaded subscriber loops. For trunk circuits, the measurement shall be made between CO locations. For nonloaded subscriber loops, the measurement shall be made from the CO to the station protector of the NID at the customer's access location.

(2) AJ is any fluctuation in the peak amplitude value of a fixed tone signal at 1,004 Hz from its nominal value. AJ is expressed in peak percent amplitude modulation.

(3) AJ is measured in two separate frequency bands, 4–300 Hz and 20—300 Hz. The 4—300 Hz band is important for modems employing echo canceling capabilities. The 20–300 Hz band is used for modems that do not employ echo cancelers.

(4) Amplitude modulation can affect the error performance of voiceband data modems. The measurement of amplitude jitter indicates the total effect on the amplitude of the holding tone of incidental amplitude modulation and other sources including quantizing and message noise, impulse noise, gain hits, phase jitter, and additive tones such as single-frequency interference.

(5) *Method of measurement.* The AJ measurement shall be performed in accordance with ANSI T1.506–1990 and ANSI/IEEE 743–1984.

(6) *Test equipment.* The equipment for performing the measurement shall be in accordance with ANSI/IEEE 743–1984.

(7) *Applicable results.* The AJ for both trunk and nonloaded subscriber loop circuits in the 4—300 Hz frequency band shall not exceed 6%. The AJ for both trunk and nonloaded subscriber loop circuits in the 20—300 Hz frequency band shall not exceed 5%.

(8) *Data record.* The measurement data shall be recorded. Suggested formats similar to Format VI for nonloaded subscriber loops and Format VII for trunk circuits in § 1755.407 or formats specified in the applicable construction contract may be used.

(9) *Probable causes for nonconformance.* Some of the causes for failing to obtain the desired results may be due to excessive S/CNN, impulse noise, and phase jitter.

(f) *Phase jitter (PJ) measurement.* (1) When specified by the borrower, PJ measurements shall be made on trunk circuits and nonloaded subscriber loops. For trunk circuits, the measurement shall be made between CO locations. For nonloaded subscriber loops, the measurement shall be made from the CO to the station protector of the NID at the customer's access location.

(2) PJ is any fluctuation in the zero crossings of a fixed tone signal (usually 1,004 Hz) from their nominal position in time within the voiceband. PJ is expressed in terms of either degrees peak-to-peak (°p–p) or in terms of a Unit Interval (UI). One UI is equal to 360° p–p.

(3) PJ measurements are typically performed in two nominal frequency bands. The frequency bands are 20–300 Hz band and either the 2–300 Hz band or the 4–300 Hz band. The 20–300 Hz band is important to all phase-detecting modems. The 4–300 Hz band or the 2–300 Hz band is important for modems employing echo canceling capabilities.

(4) Phase jitter can affect the error performance of voiceband data modems that use phase detection techniques. The measurement of phase jitter indicates the total effect on the holding tone of incidental phase modulation and other sources including quantizing and message noise, impulse noise, phase hits, additive tones such as single-frequency interference, and digital timing jitter.

(5) *Method of measurement.* The PJ measurement shall be performed in accordance with ANSI T1.506–1990 and ANSI/IEEE 743–1984.

(6) *Test equipment.* The equipment for performing the measurement shall be in accordance with ANSI/IEEE 743–1984.

(7) *Applicable results.* The PJ for both trunk and nonloaded subscriber loop circuits in the 4–300 Hz frequency band shall not exceed 6.5° p–p. The PJ for both trunk and nonloaded subscriber loop circuits in the 20–300 Hz frequency band shall not exceed 10.0° p–p.

(8) *Data record.* The measurement data shall be recorded. Suggested formats similar to Format VI for nonloaded subscriber loops and Format VII for trunk circuits in § 1755.407 or formats specified in the applicable construction contract may be used.

(9) *Probable causes for nonconformance.* Some of the causes for failing to obtain the desired results may be due to excessive S/CNN, impulse noise, and amplitude jitter.

(g) *Impulse noise measurement.* (1) When specified by the borrower, impulse noise measurements shall be made on trunk circuits and nonloaded subscriber loops. For trunk circuits, the measurement shall be made between CO locations. For nonloaded subscriber loops, the measurement shall be made from the CO to the station protector of the NID at the customer's access location.

(2) Impulse noise is a measure of the presence of unusually large noise excursions of short duration that are beyond the normal background noise levels on a facility. Impulse noise is typically measured by counting the number of occurrences beyond a particular noise reference threshold in a given time interval. The noise reference level is C-message weighted.

(3) *Method of measurement.* The impulse noise measurement shall be performed using a 1,004 Hz tone at –13 dBm0 and in accordance with ANSI T1.506–1990 and ANSI/IEEE 743–1984.

(4) *Test equipment.* The equipment for performing the measurement shall be in accordance with ANSI/IEEE 743–1984.

(5) *Applicable results.* The impulse noise for both trunk and nonloaded subscriber loop circuits shall not exceed 65 dBrnC0 (decibels relative to one picowatt reference noise level, measured with C-message frequency weighting, referred to a zero transmission level point). The impulse noise requirement shall be based upon a maximum of 5 counts in a 5 minute period at equal to or greater than the indicated noise thresholds.

(6) *Data record.* The measurement data shall be recorded. Suggested formats similar to Format VI for nonloaded subscriber loops and Format VII for trunk circuits in § 1755.407 or formats specified in the applicable construction contract may be used.

(7) *Probable causes for nonconformance.* Some of the causes for failing to obtain the desired results may be due to excessive transient signals originating from the various switching operations.

§ 1755.406 Shield or armor ground resistance measurements.

(a) Shield or armor ground resistance measurements shall be made on completed lengths of copper cable and wire plant and fiber optic cable plant.

(b) *Method of measurement.* (1) The shield or armor ground resistance measurement shall be made between the copper cable and wire shield and ground and between the fiber optic cable armor and ground, respectively. The measurement shall be made either on cable and wire lengths before splicing and before any ground connections are made to the cable or wire shields or armors. Optionally, the measurement may be made on cable and wire lengths after splicing, but all ground connections must be removed from the section under test.

(2) The method of measurement using either an insulation resistance test set or a dc bridge type megohmmeter shall be as shown in Figure 18 as follows:

BILLING CODE 3410–15–P

FIGURE 18

SHIELD OR ARMOR GROUND RESISTANCE MEASUREMENT

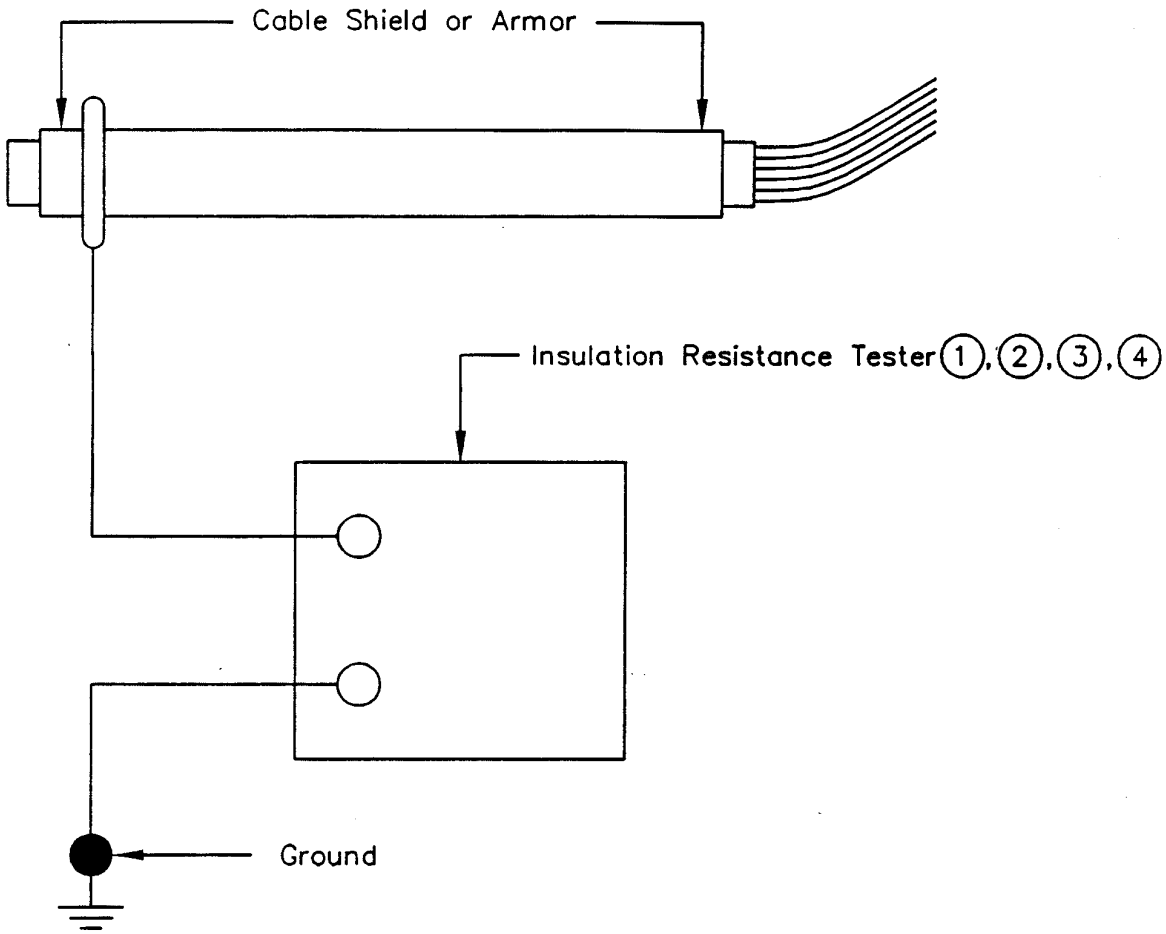

Notes:

(1.) For hand cranked or battery operated Insulation Resistance Testers, the output voltage should not exceed 500 volts dc.

(2.) For dc bridge type Megohmmeters, the voltage applied to the shield or armor under test should not be less than 250 volts dc nor greater than 1000 volts dc when using instruments having adjustable test voltage levels.

(3.) When the distance between test points results in a measurement beyond the range of the test equipment, extended range devices recommended by the test equipment manufacturer may be used to assist in making the measurement.

(4.) Biddle CO.–Model BM 200, Associate Research–Model 263, General Radio–1864 Megohm Meter, or equivalent.

BILLING CODE 3410–15–C

(c) *Test equipment.* (1) The shield or armor ground resistance measurements may be made using an insulation resistance test set, a dc bridge type megohmmeter, or a commercially available fault locator.

(2) The insulation resistance test set should have an output voltage not to exceed 500 volts dc and may be hand cranked or battery operated.

(3) The dc bridge type megohmmeter, which may be ac powered, should have scales and multipliers which make it possible to accurately read resistance values of 50,000 ohms to 10 megohms. The voltage that is applied to the shield or armor during the test should not be less than ''250 volts dc'' nor greater than ''1,000 volts dc'' when using an instrument having adjustable test voltage levels.

(4) Commercially available fault locators may be used in lieu of the above equipment, if the devices are capable of detecting faults having resistance values of 50,000 ohms to 10 megohms. Operation of the devices and method of locating the faults should be in accordance with manufacturer's instructions.

(d) *Applicable results.* (1) For all new copper cable and wire facilities and all new fiber optic cable facilities, the shield or armor ground resistance levels normally exceed 1 megohm-mile (1.6 megohm-km) at 68°F (20°C). A value of 100,000 ohm-mile (161,000 ohm-km) at 68°F (20°C) shall be the minimum acceptable value of the shield or armor ground resistance.

(2) Shield or armor ground resistance varies inversely with length and temperature. In addition other factors which may affect readings could be soil conditions, faulty test equipment and incorrect test procedures.

(3) For the resistance test method and dc bridge type megohmmeter, the ohm-mile (ohm-km) value for the shield or armor ground resistance shall be computed by multiplying the actual scale reading in ohms on the test set by the length in miles (km) of the cable or wire under test.

(4)(i) The objective shield or armor ground resistance may be determined by dividing 100,000 by the length in miles (161,000 by the length in km) of the cable or wire under test. The resulting value is the minimum acceptable meter scale reading in ohms. Examples for paragraphs (d)(3) and (d)(4) of this section are as follows:

Equation 1. Test Set: Scale Reading * Length = Resistance-Length

75,000 ohms * 3 miles = 225,000 ohm-mile

(75,000 ohms * 4.9 km = 367,000 ohm-km)

Equation 2. 100,000 ohm-mile ÷ Length = Minimum Acceptable Meter Scale Reading

100,000 ohm-mile ÷ 3 miles = 33,333 ohms

(161,000 ohm-km ÷ 4.9 km = 32,857 ohms)

(ii) Since the 33,333 ohms (32,857 ohms) is the minimum acceptable meter scale reading and the meter scale reading was 75,000 ohms, the cable is considered to have met the 100,000 ohm-mile (161,000 ohm-km) requirement.

(5) Due to the differences between various jacketing materials used in manufacturing cable or wire and to varying soil conditions, it is impractical to provide simple factors to predict the magnitude of variation in shield or armor to ground resistance due to temperature. The variations can, however, be substantial for wide excursions in temperature from the ambient temperature of 68°F (20°C).

(e) *Data record.* The data shall be corrected to the length requirement of ohm-mile (ohm-km) and a temperature of 68°F (20°C) and shall be recorded on a form specified in the applicable construction contract.

(f) *Probable causes for nonconformance.* (1) When results of resistance measurements are below the 100,000 ohm-mile (161,000 ohm-km) requirement at 68°F (20°C), the jacket temperature, soil conditions, test equipment and method shall be reviewed before the cable or wire is considered a failure. If the temperature is approximately 68°F (20°C) and soil conditions are acceptable, and a reading of less than 100,000 ohm-mile (161,000 ohm-km) is indicated, check the calibration of the equipment; as well as, the test method. If the equipment was found to be out of calibration, recalibrate the equipment and remeasure the cable or wire. If the temperature was 86°F (30°C) or higher, the cable or wire shall be remeasured at a time when the temperature is approximately 68°F (20°C). If the test was performed in unusually wet soil, the cable or wire shall be retested after the soil has reached normal conditions. If after completion of the above steps, the resistance value of 100,000 ohm-mile (161,000 ohm-km) or greater is obtained, the cable or wire shall be considered acceptable.

(2) When the resistance value of the cable or wire is still found to be below 100,000 ohm-mile (161,000 ohm-km) requirement after completion of the steps listed in paragraph (f)(1) of this section, the fault shall be isolated by performing shield or armor ground resistance measurements on individual cable or wire sections.

(3) Once the fault or faults have been isolated, the cable or wire jacket shall be repaired in accordance with § 1755.200, RUS Standard for Splicing Copper and Fiber Optic Cables or the entire cable or wire section may be replaced at the request of the borrower.

§ 1755.407 Data formats.

The following suggested formats listed in this section may be used for recording the test data:

BILLING CODE 3410–15–P

FORMAT I

OUTSIDE PLANT ACCEPTANCE TESTS – SUBSCRIBER LOOPS

PROJECT: _____ Date of Test: _____

CO NAME OF LOCATION: _____ Time Measured: _____ Tester (Contractor): _____

CO or RST GROUND RESISTANCE: _____ Ohms (Before tying to elect. neutral) Temperature: _____ Tester (Engineer): _____

CO or RST GROUND RESISTANCE: _____ Ohms (After tying to elect. neutral) Soil Type: _____ Tester (Borrower): _____

Test Equip.: _____ Moisture Content of Soil: _____

Route No.	Pair No.	Length (Miles or km)	DC Insul. Resist. (Megohms)			DC Loop Resist. (Ohms)			Measd. DC Res. Unbal. (Ohms)	Open Ckt Meas. Type (a,b,c,d)		Insertion Loss at kHz Shown						Line Noise			
			T–GD	R–GD	Min. Permit	Comp. 68°F (20°C)	Measd. ___°F (___°C)	Corr. 68°F (20°C)		SRL (dB)	Freq. (kHz)	1.0	1.7	2.3	2.8	3.4	4.0	NMC	NG–C	NGF	Bal.

Shield or Shield/Armor Continuity Data has been attached. Yes ___ No___

FORMAT II

OUTSIDE PLANT ACCEPTANCE TESTS – TRUNKS CIRCUITS

PROJECT: _____ Date of Test: _____

CO NAME OF LOCATION: _____ Tester (Contractor): _____

OFFICE A: _____ Tester (Engineer): _____

OFFICE B: _____ Tester (Borrower): _____

ELECTRONIC EQUIPMENT GROUND RESISTANCE: _____ Ohms

Time Measured: _____ Soil Type: _____ Test Equip: _____

Temperature: _____ Moisture Content of Soil: _____

In the space below show in a simple line diagram the facility makeup including all gauges, lengths, cable types, and repeater locations if any.

Trunk No.	Pair No. Off. A	Pair No. Off. B	Length Miles or km	DC Insul. Resist. (Megohms)			DC Loop Resist. (Ohms)			Measd DC Res. Unbal. (Ohms)
				T–GD	R–GD	Min. Permit	Comp. 68°F (20°C)	Measd. ___°F (___°C)	Corr. 68°F (20°C)	

FORMAT III

OUTSIDE PLANT ACCEPTANCE TESTS – T1 or T1C CARRIER PAIRS

PROJECT: _____ Type of Proposed Carrier: _____ (Trunk – Subscriber)

LOCATION: From _____ (CO Name) to _____ (CO Name) Shield or Shield/Armor Continuity has been checked: _____

Aerial: _____ Buried: _____ Weather: _____ Temp.: _____ Date: _____ Sheet ____ of ____

CARRIER FREQUENCY INSERTION LOSS MEASUREMENTS (1)

From _____ to _____					From _____ to _____				
Freq (2) (kHz)	Send Level (dBm)	Receive Level(dBm)	Measured Loss(dB)	Estimated (3) Loss (dB)	Freq (2) (kHz)	Send Level (dBm)	Receive Level(dBm)	Measured Loss(dB)	Estimated (3) Loss (dB)
20					20				
60					60				
100					100				
140					140				
180					180				
200					200				
300					300				
400					400				
600					600				
700					700				
772					772				
800					800				
1000					1000				
1200					1200				
1300					1300				
1400					1400				
1500					1500				
1576					1576				

Notes: (1) Refer to RUS TE&CM 925 on How to Make Measurements. (2) Go as high in frequency as required by contract.
(3) From either Table 7 or 8 in Paragraph (g)(4)(iii)(A) of Section 1755.403; Correct loss for temperature.

FORMAT IV

OUTSIDE PLANT ACCEPTANCE TESTS – STATION CARRIER PAIRS

PROJECT: _____ Type of Proposed Carrier: _____ (Trunk – Subscriber)

LOCATION: From _____ (CO Name) to _____ (Sub.) Shield or Shield/Armor Continuity has been checked: _____

Aerial: _____ Buried: _____ Weather: _____ Temp.: _____ Date: _____ Sheet ____ of ____

CARRIER FREQUENCY INSERTION LOSS MEASUREMENTS (1)

From _____ to _____					From _____ to _____				
Freq. (kHz)	Send Level (dBm)	Receive Level(dBm)	Measured Loss(dB)	Estimated (2) Loss (dB)	Freq. (kHz)	Send Level (dBm)	Receive Level(dBm)	Measured Loss(dB)	Estimated (2) Loss (dB)
20					20				
60					60				
100					100				
112					112				
140					140				

From _____ to _____					From _____ to _____				
Freq. (kHz)	Send Level (dBm)	Receive Level(dBm)	Measured Loss(dB)	Estimated (2) Loss (dB)	Freq. (kHz)	Send Level (dBm)	Receive Level(dBm)	Measured Loss(dB)	Estimated (2) Loss (dB)
20					20				
60					60				
100					100				
112					112				
140					140				

Notes:

(1) Refer to RUS TE&CM 925 on How to Make Measurements.

(2) From either Table 7 or 8 in Paragraph (g)(4)(iii)(A) of Section 1755.403; correct loss for temperature.

FORMAT V

OUTSIDE PLANT ACCEPTANCE TESTS

FIBER OPTIC TELECOMMUNICATIONS PLANT

PROJECT: _____ Date of Test: _____

TERMINATION POINT A: _____ Tester (Contractor): _____

TERMINATION POINT B: _____ Tester (Engineer): _____

Time Measured: _____ Tester (Borrower): _____

Temperature: _____ Test Equip: _____

Soil Type: _____ Moisture Content of Soil: _____

Route No.	Fiber No.	Length Miles or km	Splice Loss (dB)		End-to-End Attenuation (dB/km)	End-to-End Fiber Signature	
			FIELD	CO		Yes	No

Armor Continuity Data has been attached. Yes ____ No ____

FORMAT VI

VOICEBAND DATA TRANSMISSION TESTS – NONLOADED SUBSCRIBER LOOPS

PROJECT: _____ Date of Test: _____

LOCATION: From _____ (CO Name) to _____ (Sub. Name)

AERIAL: _____ Tester (Contractor): _____

BURIED: _____ Tester (Engineer): _____

TEMPERATURE: _____ DATE: _____

UNDERGROUND: _____ Tester (Borrower): _____

Test Equip.: _____ Sheet ____ of ____

Route No.	Pair No.	Length (Miles or km)	S/CNN 1,004 Hz Tone at −13 dBm0 (dB)	S/IMD (dB)		Impulse Noise (dBrnC0)	EDD (Microseconds)		AJ (%)		PJ (°p−p)	
				R2	R3		604 Hz	2,804 Hz	4 to 300 Hz	20 to 300 Hz	4 to 300 Hz	20 to 300 Hz

FORMAT VII

VOICEBAND DATA TRANSMISSION TESTS – TRUNK CIRCUITS

PROJECT: _____ Date of Test: _____

LOCATION: From _____ (CO Name) to _____ (CO Name)

AERIAL: _____ Tester (Contractor): _____

BURIED: _____ Tester (Engineer): _____

TEMPERATURE: _____ DATE: _____ UNDERGROUND: _____ Tester (Borrower): _____

Test Equip.: _____ Sheet ____ of ____

Trunk No.	Pair No. CO–A	Pair No. CO–B	Length (Miles or km)	S/CNN 1,004 Hz Tone at −13 dBm0 (dB)	S/IMD (dB)		Impulse Noise (dBrnC0)	EDD (Microseconds)		AJ (%)		PJ (°p–p)	
					R2	R3		604 Hz	2,804 Hz	4 to 300 Hz	20 to 300 Hz	4 to 300 Hz	20 to 300 Hz

Dated: April 24, 1997.

Jill Long Thompson,

Under Secretary, Rural Development.

[FR Doc. 97–11316 Filed 5–1–97; 8:45 am]

BILLING CODE 3410–15–C

DEPARTMENT OF TRANSPORTATION

Federal Aviation Administration

14 CFR Part 39

[Docket No. 96–NM–150–AD; Amendment 39–10010; AD 97–09–14]

RIN 2120–AA64

Airworthiness Directives; Boeing Model 737–100, –200, –300, –400, and –500 Series Airplanes

AGENCY: Federal Aviation Administration, DOT.

ACTION: Final rule.

SUMMARY: This amendment adopts a new airworthiness directive (AD), applicable to all Boeing Model 737–100, –200, –300, –400, and –500 series airplanes, that requires an inspection of reworked aileron/elevator power control units (PCU's) and rudder PCU's to determine if reworked PCU manifold cylinder bores containing chrome plating are installed, and replacement of the cylinder bores with bores that have been reworked using the oversize method or the steel sleeve method, if necessary. This amendment is prompted by a review of the design of the flight control systems on Model 737 series airplanes. The actions specified by this AD are intended to prevent a reduced rate of movement of the elevator, aileron, or rudder due to contamination of hydraulic fluid from chrome plating chips; such reduced rate of movement, if not corrected, could result in reduced controllability of the airplane.

DATES: Effective June 6, 1997.

The incorporation by reference of certain publications listed in the regulations is approved by the Director of the Federal Register as of June 6, 1997.

ADDRESSES: The service information referenced in this AD may be obtained from Boeing Commercial Airplane Group, P.O. Box 3707, Seattle, Washington 98124–2207. This information may be examined at the Federal Aviation Administration (FAA), Transport Airplane Directorate, Rules Docket, 1601 Lind Avenue, SW., Renton, Washington; or at the Office of the Federal Register, 800 North Capitol Street, NW., suite 700, Washington, DC.

FOR FURTHER INFORMATION CONTACT: Don Kurle, Senior Engineer, Systems and Equipment Branch, ANM–130S, FAA, Transport Airplane Directorate, Seattle Aircraft Certification Office, 1601 Lind Avenue, SW., Renton, Washington 98055–4056; telephone (206) 227–2798; fax (206) 227–1181.

SUPPLEMENTARY INFORMATION: A proposal to amend part 39 of the Federal Aviation Regulations (14 CFR part 39) to include an airworthiness directive (AD) that is applicable to all Boeing Model 737–100, –200, –300, –400, and –500 series airplanes was published in the **Federal Register** on August 28, 1996 (61 FR 44241). That action proposed to require an inspection of the aileron/elevator power control units (PCU) and the rudder PCU to determine if reworked PCU manifold cylinder bores containing chrome plating are installed, and replacement of the cylinder bores with bores that have been reworked using the oversize method or the steel sleeve method, if necessary.

Interested persons have been afforded an opportunity to participate in the making of this amendment. Due consideration has been given to the comments received.

Support for the Proposal

One commenter supports the proposed rule.